June 10, 2026
Delawie No. 24231

PROJECT MANUAL – PHASE 2 IFC

MORONGO CHP PROJECT PHASE 1 & 2

49566 Seminole Drive
Cabazon, CA 92230

for

MORONGO RESORT AND CASINO

49566 Seminole Drive
Cabazon, CA 92230

delawie
1515 Morena Boulevard
San Diego, California 92110
P.619.299.6690
F.619.299.5513

TABLE OF CONTENTS

PROCUREMENT AND CONTRACTING REQUIREMENTS

SYSTEM OPERATION SCOPE
Morongo CHP Sequence of Operations
Morongo CHP Efficiency Monitoring
Morongo CHP System Integrator SOW - Construction and Commissioning

---

DIVISION 00 -- PROCUREMENT AND CONTRACTING REQUIREMENTS
000103 - Project Directory
003100 - Available Project Information
007343 - Wage Rate and Domestic Content for Innovate Tax Credits Requirements

SPECIFICATIONS

DIVISION 01 -- GENERAL REQUIREMENTS
011000 - Summary
012000 - Price and Payment Procedures
012100 - Allowances
012500 - Substitution Procedures
    012500.01 - CSI Form 1.5C - Substitution Request During Bidding
    012500.02 - CSI Form 13.1A - Substitution Request After Bidding
013000 - Administrative Requirements
013216 - Construction Progress Schedule
014000 - Quality Requirements
015000 - Temporary Facilities and Controls
016000 - Product Requirements
016116 - Volatile Organic Compound (VOC) Content Restrictions
017000 - Execution and Closeout Requirements
017419 - Construction Waste Management and Disposal
    017419.01 - Construction Waste Management Plan Forms
017800 - Closeout Submittals
017900 - Demonstration and Training
018114 - Sustainable Design Requirements - CALGreen

DIVISION 02 -- EXISTING CONDITIONS
024119 - Selective Demolition

DIVISION 03 -- CONCRETE
031000 - Concrete Forming and Accessories
031113.19 - Falsework
031516 - Concrete Construction Joints
031519 - Cast-In Concrete Anchors
032000 - Concrete Reinforcing
033000 - Cast-in-Place Concrete
035400 - Cast Underlayment

DIVISION 04 -- MASONRY
040513.15 - Masonry Mortar And Grout
042200 - Concrete Unit Masonry

DIVISION 05 -- METALS
050522 - Welding
051200 - Structural Steel Framing
053000 - Metal Decking
055000 - Metal Fabrications
055100 - Metal Stairs
055213 - Pipe and Tube Railings

DIVISION 06 -- WOOD, PLASTICS, AND COMPOSITES
064100 - Architectural Wood Casework
068316 - Fiberglass Reinforced Paneling

DIVISION 07 -- THERMAL AND MOISTURE PROTECTION
070553 - Fire and Smoke Assembly Identification
071400 - Fluid-Applied Waterproofing

071800 - Traffic Coatings
071900 - Water Repellents
075400 - Thermoplastic Membrane Roofing
076200 - Sheet Metal Flashing and Trim
077100 - Roof Specialties
077200 - Roof Accessories
078400 - Firestopping
079200 - Joint Sealants

DIVISION 08 -- OPENINGS
081113 - Hollow Metal Doors and Frames
083100 - Access Doors and Panels
083323 - Overhead Coiling Doors
085113 - Aluminum Windows
085115 - Aluminum Acoustical Windows
087100 - Door Hardware
089100 - Louvers

DIVISION 09 -- FINISHES
092116 - Gypsum Board Assemblies
093000 - Tiling
095100 - Acoustical Ceilings
096500 - Resilient Flooring, Base and Accessories
096700 - Fluid-Applied Flooring
098414 - Acoustic Stretched-Fabric Wall and Ceiling Systems
099000 - Painting and Coating
099600 - High-Performance Coatings

DIVISION 10 -- SPECIALTIES
101419 - Dimensional Letter Signage
101423 - Panel Signage
102600 - Wall Protection
102800 - Toilet and Bath Accessories
102819 - Shower Enclosures
104400 - Fire Protection Specialties

DIVISION 11 -- EQUIPMENT (NOT USED)

DIVISION 12 -- FURNISHINGS
123600 - Countertops

DIVISION 13 -- SPECIAL CONSTRUCTION (NOT USED)

DIVISION 14 -- CONVEYING EQUIPMENT (NOT USED)

DIVISION 21 -- FIRE SUPPRESSION
211313 - Fire Suppression System

DIVISION 22 -- PLUMBING
220513 - Common Motor Requirements for Plumbing
220517 - Sleeves and Sleeve Seals for Plumbing Piping
220518 - Escutcheons for Plumbing Piping
220519 - Meters and Gauges for Plumbing Piping
220523.12 - Ball Valves for Plumbing Piping
220523.14 - Check Valves for Plumbing Piping
220529 - Hangers and Supports for Plumbing Piping and Equipment
220548.13 - Vibration and Seismic Controls for Plumbing Piping and Equipment
220553 - Identification for Plumbing Piping and Equipment
220719 - Plumbing Piping Insulation
220800 - Commissioning of Plumbing Equipment
221113 - Facility Water Distribution Piping
221116 - Domestic Water Piping
221119 - Domestic Water Piping Specialties
221316 - Sanitary Waste and Vent Piping
221319 - Sanitary Waste Piping Specialties
223300 - Electric, Domestic Water Heaters
224216.16 - Commercial Sinks

226113 - Compressed Air Piping For Laboratory and Healthcare Facilties
226119 - Compressed-Air Equipment for Laboratory and Healthcare Facilities

DIVISION 23 -- HEATING, VENTILATING, AND AIR-CONDITIONING (HVAC)
230500 - Common Work Results for HVAC
230513 - Common Motor Requirements for HVAC Equipment
230529 - Hangers and Supports for HVAC Piping and Equipment
230533 - Heat Tracing for HVAC Piping
230548.13 - Vibration Controls for HVAC
230553 - Identification for HVAC Piping and Equipment
230593 - Testing, Adjusting, and Balancing for HVAC
230713 - Duct Insulation
230716 - HVAC Equipment Insulation
230719 - HVAC Piping Insulation
230923 - Direct-Digital Control System for HVAC
231123 - Facility Natural-Gas Piping
232113 - Hydronic Piping
232116 - Hydronic Piping Specialties
232123 - Hydronic Pumps
232500 - HVAC Water Treatment
233113 - Metal Ducts
233300 - Air Duct Accessories
233423 - HVAC Power Ventilators
233713 - Air Diffusers, Registers, and Grilles
237313 - Modular Indoor Central-Station Air-Handling Units
238126.13 - Ductless Split Fan Coil

DIVISION 25 -- INTEGRATED AUTOMATION (NOT USED)

DIVISION 26 -- ELECTRICAL
260010 - Supplemental Requirements for Electrical
260513 - Medium-Voltage Cables
260519 - Low-Voltage Electrical Power Conductors and Cables
260523 - Control-Voltage Electrical Power Cables
260526 - Grounding and Bonding for Electrical Systems
260529 - Hangers and Supports for Electrical Systems
260533 - Raceway and Boxes for Electrical Systems
260536 - Cable Trays for Electrical Systems
260543 - Underground Ducts and Raceways for Electrical Systems
260544 - Sleeves and Sleeve Seals for Electrical Raceways and Cabling
260548 - Vibration and Seismic Controls for Electrical Systems
260553 - Identification for Electrical Systems
260573 - Power System Studies
260913 - Electrical Power Monitoring
260923 - Lighting Control Devices
261213 - Liquid-Filled, Medium-Voltage Transformers
261326 - Medium-Voltage Metal-Clad Switchgear
262213 - Low-Voltage Distribution Transformers
262413 - Switchboards
262713 - Electricity Metering
262726 - Wiring Devices
262813 - Fuses
262816 - Enclosed Switches and Circuit Breakers
262913.03 - Manual and Magnetic Motor Controllers
262923 - Variable-Frequency Motor Controllers
263323.11 - Central Battery Equipment for Emergency Lighting
263353 - Static Uninterruptible Power Supply
264113 - Lightning Protection for Structures
264313 - Surge Protective Devices for Low-Voltage Electrical Power Circuits
265119 - LED Interior Lighting
265213 - Emergency and Exit Lighting
265619 - LED Exterior Lighting

DIVISION 27 -- COMMUNICATIONS (NOT USED)

DIVISION 28 -- ELECTRONIC SAFETY AND SECURITY
283100 - Fire Alarm System

DIVISION 31 -- EARTHWORK
310000 - Earthwork
311000 - Site Clearing
312000 - Earth Moving
316329 - Drilled Concrete Piers and Shafts

DIVISION 32 -- EXTERIOR IMPROVEMENTS
321216 - Asphalt Paving
321313 - Concrete Paving
321373 - Concrete Paving Joint Sealants
321723 - Pavement Markings
323113 - Chain Link Fences and Gates

DIVISION 33 -- UTILITIES
331416 - Site Water Utility Distribution Piping
333113 - Site Sanitary Sewerage Gravity Piping
335216 - Gas Hydrocarbon Piping

DIVISION 34 -- TRANSPORTATION (NOT USED)

DIVISION 40 -- PROCESS INTEGRATION (NOT USED)

DIVISION 44 -- POLLUTION CONTROL EQUIPMENT
441373 - Selective Catalytic Reduction (SCR) System Standard

DIVISION 46 -- WATER AND WASTEWATER EQUIPMENT (NOT USED)

APPENDIX
A - Fire Protection Product Data Sheets
B - Fire Protection Hydraulic Calculations
C - Fire Alarm Product Data Sheets
D - Instrument List Distribution

SEQUENCE OF OPERATIONS

Morongo CHP Project

June 10, 2026

Contents

1 Purpose 1
2 Executive Summary 1
3 Acronyms and Definitions 2
4 Facility and Project Description 3
4.1 Electrical System Operation Overview 4
5 Integrated Control System Architecture 4
5.1 PMS Controller 4
5.2 CHP Controller 5
5.3 EasyGen Control Platform 5
5.4 BESS Controller 5
5.5 PV Controller 5
6 Overall Plant Operating Modes 6
6.1 Grid Connected Mode 6
6.2 Island Mode Operation (Sequence S and L) 6
6.3 Utility Loss and Island Operation 6
6.4 Planned Island Transition (Sequence M1) 7
6.5 Utility Restoration (Sequence B2) 7
6.6 Optimized Use of Thermal and Electrical Load Following Modes 7
6.6.1 Control Logic for Starting a Genset 8
6.6.2 Control Logic for Selection of Optimal Load Following Mode 9
7 Mechanical and Auxiliary Subsystem Sequences 9
7.1 SCR and Urea Dosing Systems 9
7.2 Jacket Water Systems 11
7.3 Aftercooler Water Systems 12

7.4 High Temperature Water System 12
7.5 Engine Exhaust Systems 13
7.6 Low Temperature Water System 14
7.6.1 Dry Coolers 14
7.6.2 LTW Pumps 14
7.7 Fuel Gas System 15
7.8 Lube Oil System 16
7.9 Waste Oil System 16
7.10 Urea Supply System 16
7.10.1 Urea Tanks 17
7.10.2 Urea Pumps and Distribution 17
7.11 Compressed Air System 17
7.12 Pool Water System 18
7.13 Emergency Power-Off System 18
8 CHP Genset Operating Sequence 19
8.1 Genset Start Permissives 19
8.2 Genset Startup Sequence 20
8.3 Normal Genset Operation 20
8.4 Safety Shutdowns 21
8.4.1 Genset Control System Safety Shutdowns 21
8.4.2 Switchgear PMS Safety Shutdowns 21
8.4.3 CHP Safety Shutdowns 21
8.4.4 Urea Dosing System Shutdowns 22
8.4.5 Immediate and Controlled Shutdown Actions 22
8.5 Normal Genset Shutdown Sequence 22
8.6 Pre-Lube Pumps 23
8.7 Crankcase Vent Mist Eliminators 23
9 ITC Efficiency Calculations 24

9.1 Parasitic Power 24
9.2 CHP Net Plant Efficiency 25
9.3 Electrical Efficiency 26
9.4 Data Presentation, Archival and Retention: 26

1 Purpose

The purpose of this document is to describe the sequence of operation for the new Morongo Casino Resort & Spa (Morongo) Combined Heat and Power (CHP) plant which will be integrated with the existing microgrid upgrade. This document will be used as the basis for the control system integration design.

2 Executive Summary

The existing 12kV distribution system is comprised of two 12kW switchgear, SSE1 and CPS. The power sources include:

- 12kV Utility service (12kV)
- 3.8MW PV
- (1) 3MW Diesel Generator
- (3) 2.5MW Diesel Generators
- (4) 2.5MW Gas Generators

The existing peak facility load is 4MW – 6MW.

This project will include the installation of (2) 2.5MW CHP generators and (1) 2MW/4MWh Battery Energy Storage System

The CHP plant provides electrical power in combination with useful thermal energy to Morongo's casino/hotel Facility (Facility). Electrical power generated by the CHP plant is connected to Morongo's existing electrical distribution system. Thermal energy recovered from genset jacket water and genset exhaust, in the form of high temperature hot water (HTW), is sent to the existing Central Mechanical Plant (CMP) for distribution to the Facility's cooling and heating systems.

.

3 Acronyms and Definitions

Acronym	Definition
BESS	Battery Energy Storage System
BOP	Control system for the Central Mechanical Plant equipment, including existing chillers, pumps, heat exchangers, and related systems
CHP	Combined Heat and Power
CHP Controller	Allen Bradley based control system for the new CHP equipment
CMP	Central Mechanical Plant
CPS	12kV Switchgear with gas generator supplied power and 'Original Casino' loads
EasyGen Control Platform	Genset supervisory control system comprised of Woodard 3400XT and LS-6 controllers
EG5, EG6, EG7	Tags for CPS diesel generator
EG8	Tag for SSE1 diesel generator
ELF	Electric Load Following
EMCP	Engine Management Control Panel
EPP	Existing Power Plant
EPO	Emergency Power-Off
GCP	New Switchgear added for this project
HTW	High Temperature Water
PMS	Power Management System comprised and SEL RTAC and SEL protection relays
PVe	Photovoltaic solar generation system
POOL RIO	Pool Bldg remote I/O Panel
RTAC	SEL Real-Time Automation Controller
TCP	Transmission Control Protocol or data link
TLF	Thermal Load Following
SCE	Southern California Edison
SSE1	12kV Switchgear with utility supplied power and 'Casino Expansion' loads.
UDP	Urea Dosing Panel

4 Facility and Project Description

The existing 12 kV distribution system includes a 12 kV Main Service Switchboard (SSE1) (served from an SCE 33 kVA to 12kV substation) with two 5MVA transformers operating in parallel. This service, along with a 3 MW standby diesel generator and a 3.8MW PV system power switchgear SSE1. Switchgear SSE1 supplies electrical load in the “Casino Expansion” area.

The existing 12kV distribution system also includes switchgear CPS with (4) 2MW gas generators and (3) 2MW diesel generators. CPS supplies loads in the ‘Original Casino’ area. CPS is connected to SCE through a temporary connection completed during phase 1 of this project but operates in Island. After the project is completed the existing 2MW gas generators will be disconnected and taken out of service.

This project will include installation of (2) 2.5MW Caterpillar Gas Generators and other equipment required for operating the generators and use of heat rejected by them. The generators will be connected to new switchgear (GCP), which will replace the existing temporary connection between SSE1 and CPS. The project will also install 2MW/4MWh Battery Energy Storage System (BESS) and relocate the PV connection from SSE1 to GCP.

The existing SSE1 generator controls are not integrated into the CPS control system. SSE1 is normally powered by the utility and upon interruption of SCE electrical utility service, the existing control systems isolate the facility from the SCE utility power grid, disconnects the PV, and then starts 3MW standby diesel generator. In the scenario that CPS is also being powered by the utility, CPS will be separated from SSE during a utility outage.

The existing CPS generator control system is comprised of Woodward DSLC controllers and an Allen Bradley PLC. During normal operation CPS is powered by the gas generators but has the capability to be powered from SCE. The gas generators cannot operate in parallel with the utility. Upon interruption of the gas generators or the utility, the existing control system starts the standby diesel generators EG5-EG7 that supply load during the outage. The existing control system performs load shedding if necessary to prevent overloading the standby generators.

The new control system will replace the existing CPS control system, incorporate SSE1 controls and include a new controller for the CHP generators.

- Woodward controllers (EasyGen 3400XT and LS-6) will replace the existing DSLCs to create the EasyGen Control Platform. Controllers will also be installed on EG-8, the new generators and synchronization breakers. They will interface with breakers and generator controllers for generator control and synchronization.
- The existing Allen Bradley PLC functions will be replaced with an SEL RTAC that will work in conjunction with the SEL protection relays and EasyGen controllers for load management and diesel generator control. The functionality of the RTAC and

SEL relays that provide diesel generator control, and load management is referred to as the PMS controller.

- The CHP controller is an Allen Bradley PLC that interfaces with process instrumentation and power sources (utility, generators, PV, BESS) to control the CHP generator output and BESS operation.

4.1 Electrical System Operation Overview

Under normal operating conditions, new Gas Generators will run in parallel with the SCE electrical service, thereby reducing demand for utility electrical power supply for the entire facility. The BESS will charge during peak PV power output and discharge as the CHP requirements and electrical demand will allow. The PV system will continue to operate in its existing configuration, supplying power to the facility loads while exporting excess generation to the utility grid. Under the interconnection agreement, only PV power is permitted to be exported. The CHP controller will monitor the exported power and maintain a minimum import level to avoid inadvertently exporting power.

PV power is prioritized as follows:

1. Meet Facility electrical demand.
2. Charge the BESS.
3. Export to the grid.

Diesel generators provide standby power and system stability during a utility interruption.

5 Integrated Control System Architecture

5.1 PMS Controller

The PMS control system monitor will monitor the utility breaker (S1) to determine if the system is in grid connected or island mode.

- When the system in island mode the PMS will be used to manually open and close breakers; and issue auto-sync signals to the EasyGen Controllers.
- When in grid connected mode, the PMS will provide power system management through a load add / load shed scheme.
- During a transition the PMS will control the breakers and diesel generators as described in the Operating Modes section.

The PMS will also monitor the PV output and utility power flow to ensure only PV power is exported to the grid.

5.2 CHP Controller

The CHP controller will simultaneously and continuously complete thermal load following and electrical load following calculations.

The thermal load following calculations will be based on thermal requirements to determine the CHP generator kW setpoint.

The electrical load following will be based on:

- maximum power output requirements to maintain a minimum import from the utility (grid connected) or minimum diesel component (island mode)
- BESS state of charge and PV output

The CHP controller will set the CHP generator output:

- to the lesser of the TLF or ELF result, when in auto
- to an operator entered setpoint (supervised by the calculations results) when in manual

The CHP controller will also monitor the PV output, BESS state of charge, electrical load and heat demand to charge/discharge commands to the BESS.

5.3 EasyGen Control Platform

Every generator will be equipped with Woodward 3400XT controller, which will interface with the associated generator control panel. Additionally, the synchronization breakers will also be equipped with LS-6 modules. These controllers will be linked together through a redundant communication network to form the EasyGen Control Platform. This system will provide isochronous load sharing for all diesel generators and place gas generators in kW load control and voltage droop. The EasyGen platform will provide auto-synch capability at breaks equipped with 3400XT or LS-6 controllers.4.6

5.4 BESS Controller

The CHP controller will interface with the BESS over Modbus TCP and will exchange real and reactive power limits, enable/disable status, alarms, and availability status. Charge and discharge commands will be provided by the CHP controller. The BESS controller will manage the charge/discharge rates and provide remote monitoring.

5.5 PV Controller

No changes are being made to the existing PV controller.

6 Overall Plant Operating Modes

6.1 Grid Connected Mode

During grid connected mode, the CHP controller will start the CHP generators based on the ELF and TLF calculations. The cogeneration operates in parallel with the utility in import and thermal load following modes to maintain energy efficiency and comply with interconnection requirements.

The CHP controller will monitor the power requirements, PV output and BESS state of charge to charge the battery when excess power is available and discharge the battery when the load is high and thermal demand is low.

Only the PV system is permitted to export power as needed under the interconnection application. The utility power and PV power will be monitored by the CHP controller as part of the electrical load following calculations. A 700GT intertie relay will continuously monitor utility export and PV production and sequentially trips CHP gensets if export limits exceed the values and time delays required by the interconnection agreement.

6.2 Island Mode Operation (Sequence S and L)

In Island mode, the Diesel Generators will be the main source of power for system stability.

- PV Feeder Breaker (G10) will be open
- BESS Feeder Breaker (G5) will be open

When the system is stable, operators will have the ability to bring the CHP generators online provided the following conditions are met:

- 2/3 of the power generation is provided by the diesel generators
- The CHP generators are loaded to at least 50% rated capacity

The Woodward EasyGen platform shares proportional load among online gensets and manages capacity. The PMS Controller continuously monitors load and sheds lower-priority feeders if generation is suddenly lost.

6.3 Utility Loss and Island Operation

On loss of utility, the SSE1

- Main Breaker (S1) opens to separate from the grid. The CHP gensets will trip due to their slow response to transient conditions, resulting in a dead bus condition. Critical loads transfer to 480 V UPS power
- PV Feeder Breaker (G10) opens to take the PV system offline

- BESS Feeder Breaker (G5) opens to take the BESS offline
- CPS Tie Breaker (G2) opens and the diesel generators start. The control system assigns rotating priority to the first diesel genset to close onto the dead bus. If the first-priority genset fails to come to speed within the specified time, priority moves to the next genset.
- CPS Feeder Breakers (G6 – G9) open before any genset breaker closes to the bus, CPS feeder breakers open so that the first genset online picks up minimum load.

The system will then run in Island Mode Operation

CPS feeders close back in as generation capacity becomes available.

6.4 Planned Island Transition (Sequence M1)

An operator-initiated transition from grid connected mode to island operation will be a closed transition.

- PV Feeder Breaker (G10) will open to take the PV system offline
- BESS Feeder Breaker (G5) will open to take the BESS offline

The diesel generators will be started and base loaded. As the diesel generator output is ramped up, the allowable CHP power output will be reduced. Once the diesel generators are sufficiently loaded:

- Main Breaker (S1) will open to separate from the utility. The mode of one diesel generator will be changed to isochronous mode to regulate island voltage and frequency.

The system will then run in Island Mode Operation

6.5 Utility Restoration (Sequence B2)

On restoration of utility, the Woodward and SEL platforms monitor the utility source and permit synchronization at the main breaker or at other locations equipped with LS-6 controllers. Once the facility is restored to utility power, the Woodward system ramps diesel gensets offline and opens their breakers at low load levels. On-site power generation will be restored to normal utility-connected operation.

6.6 Optimized Use of Thermal and Electrical Load Following Modes

The control logic uses both an electrical load-following (ELF) loop and a thermal load-following (TLF) loop to continuously (in real-time) determine the allowable CHP genset output. Each loop produces a 0–100% control output representing the amount of genset loading permitted by that control mode. The genset gross kW load command is then

determined by applying a low-select function between the electrical load-following control variable (CV) and the thermal load-following CV. This ensures that the CHP genset output does not exceed either the electrical export/import constraint or the thermal efficiency/heat utilization constraint.

The electrical load-following loop is intended to maintain the required minimum utility import and prevent unauthorized export of genset-produced power. The electrical load-following setpoint is the minimum import value, and the process variable is the combined utility import and net PVe power.

The thermal load-following loop is intended to ensure that the CHP system operates only when useful thermal demand is available and that the system maintains the required efficiency target. The thermal load-following setpoint is 60% efficiency, and the process variable is the calculated CHP efficiency. The resulting engine load command is therefore the lower of the two control outputs, so the genset is loaded only to the level allowed by both electrical and thermal operating constraints.

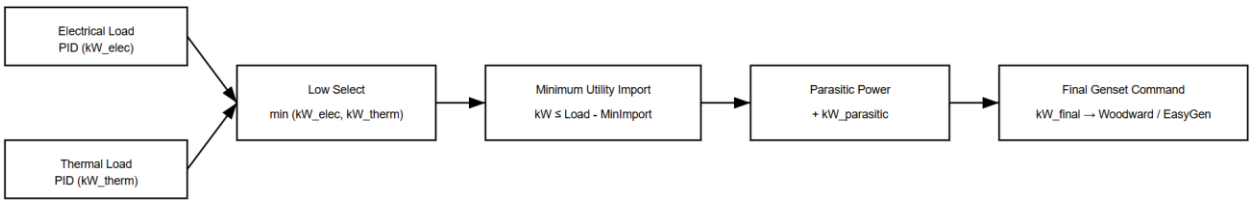

6.6.1 Control Logic for Starting a Genset

To determine if there is sufficient useful thermal demand to start the first genset, the real-time heat demand from the hydronic heating (HHW) system (existing BTU meter FIQ-210), chilled water production (existing BTU meter FIQ-410), and pool heating systems (new BTU meters FIT-PW-1 and FIT-PW-2) are summed. A genset shall be permitted to start when the total useful thermal demand exceeds the minimum usable waste heat available from one genset. Once operating, the thermal load-following controller shall continue to limit genset loading based on calculated CHP efficiency, while the electrical load-following controller shall limit genset loading based on the minimum utility import requirement after accounting for CHP parasitic power. The final genset kW command shall be the low-select value between the electrical load-following control output and the thermal load-following control output.

Total Useful Thermal Demand = $Q_{HX5} + Q_{CHW} + Q_{LAZY} + Q_{BEACH}$

where:

Q_{HX5} = Heat demand from BTU Meter FIQ-410

Q_{CHW} = CHW equivalent heat demand from BTU meter FIQ-210

Q_{LAZY} = Lazy River Heat Demand from BTU Meter FIT-PW-1

Q_{BEACH} = Beach Pool Heat Demand from BTU Meter FIT-PW-2

Thermal demand is considered satisfied to start a genset when:

Total Useful Thermal Demand > GEN Min Useable Waste Heat

Expanded:

FIQ-410.PV + FIQ-210.PV + FIT-PW-1 + FIT-PW-2 > GEN Min Useable waste heat

Electrical demand is considered satisfied to start or increase genset output when:

Utility kW + PVe kW >(Demand + 1) × GEN Min kW + Min Import kW - (GEN Gross kW - CHP Parasitic kW)

6.6.2 Control Logic for Selection of Optimal Load Following Mode

The electrical load-following controller shall operate as follows:

Elec LF Setpoint SP = Min Import kW
Elec LF Process Variable PV = Utility kW + PVe NET kW
Elec LF Control Variable CV = 0–100%

The thermal load-following controller shall operate as follows:

Thermal LF SP = 60% efficiency
Thermal LF PV = Calculated CHP Efficiency
Thermal LF CV = 0–100%

The final genset kW command shall be determined by the low-select function:

Engine kW Command = Low Select (Elec LF CV, Thermal LF CV)

7 Mechanical and Auxiliary Subsystem Sequences

7.1 SCR and Urea Dosing Systems

SCR-9 and SCR-10 serve GEN-9 and GEN-10 respectively. Each SCR system consists of a urea dosing panel, urea mixing lance installed in a urea mixing duct, SCR housing containing the SCR catalyst, differential pressure transmitter across the SCR housing, upstream and downstream temperature elements, NOx/O2 probe, and NOx analyzer.

For GEN-9, the associated devices include PDT-SCR-9, TE-EH-9-1, TE-EH-9-2, XE-EH-9, and XY-EH-9. For GEN-10, the associated devices include PDT-SCR-10, TE-EH-10-1, TE-EH-10-2, XE-EH-10, and XY-EH-10.

Each SCR system includes dilution air fans DF-1 for GEN-9 and DF-2 for GEN-10, VFDs, and block valves FXV-DA-9 and FXV-DA-10. For optimal NOx removal in the SCR, the dilution air system maintains SCR exhaust inlet temperature below 900°F at all times, which is necessary for lower engine load operation.

Each urea dosing panel (UDP) controls urea injection flow rate, dilution fan start/stop and speed modulation, and dilution air block valve open/close. Each UDP monitors catalyst inlet temperature, catalyst outlet temperature, NOx and O2 concentration in exhaust leaving the catalyst, and pressure drop across the catalyst. Each UDP interfaces with the CHP using Modbus TCP.

Each UDP includes an internal urea metering pump that pumps urea from the dosing panel to the urea mixing lance. Plant compressed air is supplied to the UDP and is used to purge, cool, and atomize the urea solution at the mixing lance.

The Operator enables each urea dosing system at its UDP. Once enabled, the UDP monitors the following permissive conditions:

1. Genset running.
2. Genset load above minimum load setting.
3. Genset exhaust temperature above minimum setpoint and below maximum setpoint.
4. Instrument air pressure above minimum setpoint.
5. Urea tank level above low-low setpoint.

After all permissives are met, the UDP purges the urea mixing lance with compressed air. After the purge is complete, the urea injection pump starts and urea and compressed air are injected into the mixing lance.

Urea flow is controlled by the UDP based on genset load and NOx emissions downstream of the SCR in a feed-forward plus trim manner. The genset load signal is provided by EasyGen through the CHP over Modbus TCP. The NOx trim signal is provided by the NOx analyzer.

As genset load is reduced from 100% to 50%, exhaust temperature increases and approaches the 900°F limit for effective NOx removal. When exhaust temperature reaches 850°F, the UDP opens the applicable dilution air block valve, starts the dilution fan, and modulates fan speed to maintain no more than 875°F into the SCR. When exhaust temperature remains below 850°F for five minutes, the UDP shuts down the dilution fan.

The following conditions initiate UDP shutdown and alarm:

1. Loss of genset load signal.
2. Low instrument air pressure.
3. Low urea flow.
4. High SCR differential pressure.
5. High genset exhaust gas temperature.
6. Low-low urea tank level.
7. Loss of NOx signal.

Low urea tank level alarms but does not shut down the UDP.

In addition to the safeties above, each UDP shuts down if the UDP Auto/Off switch is moved to Off, the panel EPO pushbutton is activated, or a plant or fire panel EPO switch is activated.

Any UDP safety shutdown, or shutdown due to loss of genset running signal, stops the urea injection pump. Instrument air continues flowing for 1 minute to purge and cool the urea mixing lance. After purge completion, the instrument air flow control valve closes. If the UDP was not shut down by an EPO, it returns to standby and restarts automatically when all permissives are met.

The following UDP operating parameters are available to the CHP for supervisory, trending, and reporting requirements:

1. SCR catalyst inlet temperature
2. SCR catalyst outlet temperature
3. Engine runtime Engine load
4. Urea flow in gal/hr
5. Measured NOx in ppm corrected to 15% O2 dry,
6. NOx setpoint in ppm corrected to 15% O2 dry
7. Urea tank level in gallons
8. SCR differential pressure in psid.

The following alarms are available from each UDP:

1. UDP common alarm
2. NOx probe fault
3. SCR high differential pressure
4. High SCR inlet temperature.

7.2 Jacket Water Systems

Each genset has a dedicated jacket water heat exchanger (JWHX). The engine-driven jacket water pump circulates jacket water at approximately 210°F from the genset through the JWHX and back to the genset at approximately 192°F. The waste heat transferred from the JWHX is absorbed by the high temperature water (HTW) system (described in Section 6.4 below).

Temperature control valve TCV-JW-9-1 modulates jacket water flow through JWHX-9

Temperature transmitter TIT-JW-9-1 sends an analog signal to the CHP to indicate jacket water return temperature to the engine and to alarm if the temperature reaches 212°F and to shut down the engine if the temperature reaches 215°F.

7.3 Aftercooler Water Systems

Each genset has a dedicated aftercooler heat exchanger (ACHX). The engine-driven aftercooler water pump circulates aftercooler water at approximately 130°F from the genset through the ACHX and back to the genset at approximately 118°F. The ACHX transfers heat to the LTW system. No waste heat is recovered from this system.

Temperature control valve TCV-AC-9-1 modulates aftercooler water flow through ACHX-9 via an analog signal from the CHP.

Temperature transmitter TIT-AC-9-1 sends an analog signal to the CHP to indicate the aftercooler water temperature leaving the engine and to alarm if the temperature exceeds 135°F.

7.4 High Temperature Water System

The HTW system provides cooling to the jacket water circuits and recovers waste heat from the jacket water and engine exhaust for GEN-9 and GEN-10.

HTW returns from the CMP at a controlled temperature of approximately 175°F to 180°F and leaves the CHP building at approximately 210°F for use in Facility chilled water and heating loads. The HTW leaving the CHP building flows to CH-3, then through pool heating, hydronic heating, domestic water heating, and load balance heat exchangers.

The temperature control valves for hydronic heating, domestic hot water, and the load balance heat exchangers already exist in the CMP control system and will be remapped to the new BOP control system. These loops will continue to operate as they did in the legacy CHP system and are not programmed in the CHP control system. The pool heating circuit is new and is controlled through BOP and Pool RIO interaction as described in the thermal load following sequence.

A total of four 100% HTW pumps are provided, including two initial pumps, HTWP-14 and HTWP-15, serving GEN-9 and GEN-10 and two future pumps, HTWP-16 and HTWP-17, serving GEN-11 and GEN-12. Either HTWP-14 or HTWP-15 is designated lead, and the other is designated lag. Lead/lag rotation is by period rotation schedule. Variable frequency drives are provided on each pump to automate speed/flow adjustments depending on how many gensets are running.

The Operator initiates normal starting and stopping of the HTW pumps through the CHP. The Operator selects lead and lag pumps. As a start permissive, either FXV-HTW-9-1 or FXV-HTW-10-1 must be open, as indicated by ZISH-FXV-9 or ZISH-FXV-10. After valve open status is confirmed, the Operator starts the lead pump through the CHP.

Pump running status is sensed in the VFD. If a running pump fails, the CHP alarms and starts the lag pump. A shutdown signal from the EPO system or plant fire alarm system stops the HTW pump and prevents the non-operating pump from starting.

Flow meters FIT-HTW-9 and FIT-HTW-10 send analog signals to the CHP to indicate flow through each genset HTW circuit. Because one pump may serve up to two gensets, the CHP sets pump speed to maintain 1,000 total gpm, or 500 gpm to each active genset circuit. The CHP sends an analog signal to the lead pump VFD for speed/flow adjustment. If only one genset is operating, the lead HTW pump VFD reduces pump speed until the active circuit flow meter reads approximately 500 gpm.

Temperature transmitter TIT-HTW-4 sends an analog signal to the CHP indicating HTW return temperature from the CMP. If return temperature exceeds 180°F for 1 minute, the CHP shall alarm to notify the Operator to investigate. High HTW return temperature shall not initiate controlled shutdown at >185°F unless specifically required by the engines' control systems, based on an excessively high JW temperature leaving the engine.

Transmitters TIT-HTW-9-2 and TIT-HTW-9-3 send analog signals to the CHP indicating HTW temperatures into and out of exhaust heat recovery unit HRU-9. GEN-10 operates similarly.

Flow control valves FXV-HTW-9-1 and FXV-HTW-10-1 are on/off valves that the CHP opens as a permissive for GEN-9 or GEN-10 to start. When a genset shuts down, its respective HTW flow control valve closes.

Temperature control valve TCV-HTW-9-1 is the HRU-9 bypass damper. If HTW temperature leaving the HRU exceeds 212°F for one minute, as indicated by TIT-HTW-9-3, TCV-HTW-9-1 modulates to maintain a 210°F setpoint. TCV-HTW-10-1 operates similarly for GEN-10.

7.5 Engine Exhaust Systems

Exhaust from each genset first passes through a CO oxidation catalyst to reduce carbon monoxide and hydrocarbon emissions. Exhaust then flows through the urea injection tube to the SCR catalyst for NOx reduction. Finally, exhaust flows through the muffler, MFL-9 for GEN-9 or MFL-10 for GEN-10, before discharging to atmosphere.

Most of the exhaust system instruments are supplied by the SCR vendor, and their operation is described in the SCR system sequence. Exhaust bypass damper control is part of the HTW temperature control sequence.

Temperature transmitters TIT-EH-9-3 and TIT-EH-10-3 measure exhaust temperature after the HRUs and send indications to the CHP control system.

In addition to controlling maximum HTW temperature leaving the HRU, bypass dampers TCV-HTW-9-1 and TCV-HTW-10-1 shall include a stack-temperature low-limit override. The bypass damper output shall be the greater of the bypass demand from the HTW

outlet temperature controller and the stack-temperature low-limit controller. The stack-temperature low-limit controller shall modulate bypass as required to maintain minimum stack temperature no lower than 210°F to minimize corrosion in mufflers and stacks. Final damper fail position shall be open to full bypass.

7.6 Low Temperature Water System

The initial LTW system consists of two 100% multi-fan dry coolers, LTWC-1 and LTWC-2, one operating and one standby, and two 100% LTW pumps, P-LTW-1 and P-LTW-2. One dry cooler shall be capable of serving two gensets operating at 100% load at the design summer dry-bulb condition. A future LTWC-3 may be added if required for future GEN-11/GEN-12 capacity or additional redundancy. Either pump can operate with either dry cooler.

The CHP controls LTW pumps and control valves, and monitors dry coolers and process conditions.

7.6.1 Dry Coolers

As a permissive to start the first genset, the Operator selects the lead and lag dry coolers through the CHP and enables the lead cooler.

Each dry cooler contains multiple fans controlled by the dry-cooler control panel. Fan-speed control may be by EC fan control, individual VFD control, or a common VFD only if the vendor confirms that individual fan failure can be isolated while the remaining fans continue to operate. A dedicated temperature transmitter, TIT-LTW-1-1 for LTWC-1 or TIT-LTW-1-2 for LTWC-2, sends an analog signal through the CHP to the cooler control panel. Fan speeds are modulated to maintain a 118°F LTW air supply temperature from the cooler.

If one fan motor fails, the dry-cooler control panel shall alarm and increase the speed of the remaining available fans as required to maintain LTW supply temperature. If the active cooler cannot maintain LTW supply temperature, the CHP shall alarm and enable the standby cooler if available. If LTW temperature continues to rise above the engine manufacturer’s limit, the affected genset shall enter controlled shutdown.

Each fan has a dedicated vibration switch that shuts down the fan on high vibration. The fan cannot restart until the fault is corrected and the vibration switch is reset.

A shutdown signal from the EPO system or plant fire alarm system stops the dry cooler fans.

7.6.2 LTW Pumps

The Operator starts the LTW pumping system through the CHP as a permissive to start the first genset or pair of gensets. The Operator selects lead and lag pumps and lead and lag dry coolers.

When the Operator starts the lead pump, the block valve to the lead dry cooler opens, such as FXV-LTW-1-1 for LTWC-1 or FXV-LTW-2-1 for LTWC-2. Valve open position switches, including ZISH-LTW-1-1 for LTWC-1 and ZISH-LTW-2-1 for LTWC-2, confirm open status as a genset start permissive.

Pump running status is sensed in the MCC. If a running pump fails, the CHP alarms and starts the lag pump.

A shutdown signal from the EPO system or plant fire alarm system stops operating LTW pumps and prevents non-operating pumps from starting.

7.7 Fuel Gas System

Natural gas is supplied to GEN-9 and GEN-10 in the CHP building from the Morongo house line. When no gensets are operating and one or more gensets are called to start, the CHP sends a signal to open fuel gas flow valve FXV-FG-1. Position switches ZISH-FG-1 and ZISL-FG-1 indicate valve open or closed status to the CHP.

Seismic valve FXV-FG-2 mechanically stops fuel gas flow if tripped by a seismic event. A switch mounted on the valve indicates closed status to the CHP as a digital signal so the condition can be alarmed. Once tripped, the seismic shutoff valve remains closed until manually reset.

Common flow meter FQIT-FG-1 measures total fuel gas used by all operating gensets and sends an analog instantaneous fuel flow signal to the CHP. The CHP records instantaneous fuel flow and totalizes fuel usage.

Pressure regulator PCV-FG-1 regulates fuel gas pressure to 7 psig before distribution to the gensets and does not interface with the CHP.

Each genset has a dedicated fuel gas train with a filter, safety shutoff valves, vent valve, high and low-pressure switches, and final pressure regulation to 3 psig. GEN-9 devices include SV-FG-9-1, SV-FG-9-2, SV-FG-9-3, PSH-FG-9-1, PSL-FG-9-1, and PCV-810. GEN-10 devices include SV-FG-10-1, SV-FG-10-2, SV-FG-10-3, PSH-FG-10-1, PSL-FG-10-1, and PCV-820.

Low fuel gas pressure shuts down the associated genset. High fuel gas pressure alarms but does not shut down the genset. Control of the fuel gas trains is through the individual genset control panels. The fuel gas trains do not communicate directly with the CHP.

Fuel gas supply pressure to each genset is monitored by pressure transmitters PIT-FG-9-1 and PIT-FG-10-1, which send analog signals to the CHP.

A shutdown signal from the EPO system or plant fire alarm system closes the fuel gas train safety shutoff valves and opens the fuel gas train vent valves.

7.8 Lube Oil System

Each genset has a dedicated lube oil storage tank and day tank. The following sequence describes GEN-9; other gensets operate similarly.

When day tank T-LO-9-2 requires filling, the Operator manually aligns the proper valves in the fill line and starts lube oil pump P-LO-9 mounted on lube oil tank T-LO-9-1. When T-LO-9-2 is filled, the Operator stops the pump.

Day tank T-LO-9-2 gravity-feeds fresh lube oil to GEN-9 through the engine-mounted lube oil level controller LC-LO-9, which regulates lube oil flow to the genset.

The Operator is responsible during each shift to monitor day tank levels and refill them as required. Level transmitter LIT-LO-9-1 mounted on the main lube oil tank sends a digital signal to the CHP to alarm high tank level.

If a leak is detected in the secondary containment of the double-walled lube oil tank, leak detection switch XS-LO-9-1 sends a digital signal to the CHP to alarm the condition.

7.9 Waste Oil System

A manually operated waste oil system is used to remove spent lube oil from GEN-9 and GEN-10 when maintenance requires it. The following sequence describes GEN-9; other gensets operate similarly.

Before removing spent lube oil, the Operator initiates a normal genset stop sequence. After the genset is shut down, a hose is connected from the genset lube oil drain valve to the waste oil collection header, and the oil filler cap is removed from the genset. Manual valves are opened between the genset and waste oil pump P-WO-9 mounted on waste oil tank T-WO-9.

After all waste oil valves are properly aligned, the Operator starts P-WO-9 and runs it until all waste oil is pumped from GEN-9. After P-WO-9 is stopped, the manual waste oil valves are closed and the hose between the genset drain valve and the waste oil collection header is removed.

Level transmitter LIT-WO-9-1, mounted on T-WO-9, sends a digital signal to the CHP to alarm high tank level. If a leak is detected in the secondary containment of double-walled T-WO-9, leak detection switch XS-WO-9-1 sends a digital signal to the CHP to alarm the condition.

7.10 Urea Supply System

GEN-9 and GEN-10 each have a dedicated urea supply system. Each system includes one 3,000-gallon urea tank, T-UR-9 or T-UR-10, one 100% capacity urea pump, P-UR-9 or P-UR-10, pressure regulating valves, relief valves, filters, and piping.

7.10.1 Urea Tanks

Level transmitters LIT-UR-9 and LIT-UR-10 monitor their respective tank levels. Analog level signals are sent to the CHP and shared with the respective UDPs over a TCP link. The transmitters also include local level indication for visual reference by the urea truck operator during filling.

The following level setpoints are configured in the CHP for each tank:

1. Level alarm high-high, LAHH-UR-9 and LAHH-UR-10, shuts tank fill valve FXV-UR-9 and FXV-UR-10.
2. Level alarm high, LAH-UR-9 and LAH-UR-10, annunciator.
3. Level alarm low, LAL-UR-9 and LAL-UR-10, annunciator.
4. Level alarm low-low and shutdown of gensets and urea system, LALL-UR-9 and LALL-UR-10.

Each urea tank is manually filled from a tanker truck using the truck onboard pump. The tank fill station includes a hose connection, manual valve, check valve, and portable spill containment pan.

7.10.2 Urea Pumps and Distribution

Each urea supply system has a constant-speed forwarding pump. The UDP controls the automatic starting, stopping, and monitoring of the pump and sends the required permissive signal for the UDP to enable the urea dosing system.

The operating urea pump takes suction from its tank and maintains urea circulation back to the tank. The urea supply line to the UDP is taken from this loop, reduced to 10 psig, and supplied to the UDP.

Urea pressure in the circulating loop is maintained by two cascading pressure control loops. Backpressure regulator PCV-UR-9-2 relieves loop pressure to the tank at 40 psig. Backpressure regulator PCV-UR-9-1 is set at 50 psig. Urea pressure to the dosing cabinet is controlled at 10 psig by PCV-UR-9-3, supplied from the 40 psig circulating loop.

Pump running status is monitored by pressure switch PSL-UR-9. If urea supply pressure falls below 15 psig, the CHP alarms.

A shutdown signal from the EPO system or plant fire alarm system stops the running urea pump.

7.11 Compressed Air System

One 100% capacity air compressor system, C-1, provides filtered and dried compressed air to the CHP plant.

The air compressor package has an onboard control system that controls all compressor operations, including startup, process monitoring, safeties, interlocks, and shutdowns. The air compressor package does not communicate directly with the CHP.

Low pressure switch PSL-CA-1 sends a digital signal to the CHP when air supply pressure falls below 60 psig. The CHP alarms the Operator.

A shutdown signal from the EPO system or plant fire alarm system stops the air compressors and dryers.

7.12 Pool Water System

The pool water (PW) system consists of two heat exchangers (PWHX-1, PWHX-2) located adjacent to the Pool Building. HTW from the CHP is piped to the heat exchangers to provide heat input to the Lazy River and Beach pool systems, respectively.

HTW is continually circulating through PWHX-1 and PWHX-2 unless they are down for maintenance. The quantity of thermal heat supplied to the pool systems is controlled on the pool side of the heat exchangers.

Each of PWHX-1 and PWHX-2 are on separate loops and contain a 3-way valve (TCV-PW-1 and TCV-PW-2) to control the outlet temperatures of the Lazy River and the Beach pool water, respectively, to prevent excessive temperature. Pool water is normally flowing through the heat exchangers unless one or both are down for maintenance.

New BTU meters (FIT-PW-1, FIT-PW-2) are installed across the existing water heaters in each system. Each sends a signal through the POOL-RIO, the BOP and to the CHP. The CHP uses these demand signals from the pools and adds it to the demands of existing FIQ-210 (demand for CHW) and existing FIQ-410 (demand for HHW) and the sum of these determines if there is enough total thermal demand to warrant starting a genset (e.g., GEN-9) if none is running. This is covered in more detail in the load following discussion in Section 5.5.1.

TSH-PW-1 and TSH-PW-2 in their respective systems each send a discrete signal to the POOL RIO to indicate a high temperature alarm so that scalding hot water is not sent to either pool system. The 3-way valve in the alarmed system will be stroked to full HX bypass and the operator notified to investigate, after which, the operate may clear the alarm, allowing the 3-way valve to return to modulating service.

7.13 Emergency Power-Off System

An EPO is located in the CHP control room. A second EPO is located outside the CHP common entrance.

If any of these EPO are pressed, the following occur:

1. GEN-9, GEN-10, GEN-11, and GEN-12 shut down.
2. Fuel control valve FXV-FG-1 closes.

3. Associated auxiliary systems stop as described in the relevant subsystem sections.
4. The BESS will shut down and be isolated from the bus.
5. Non-operating equipment affected by the EPO is prevented from starting until the EPO is cleared by the Operator.

An EPO for the BESS will be located outside of its building. When pressed, the BESS will shut down and be isolated from the bus.

8 CHP Genset Operating Sequence

8.1 Genset Start Permissives

Before starting a genset, the following equipment and permissive conditions must be operating, enabled, or satisfied:

1. One LTW cooling water pump, LTWP-1 or LTWP-2, running.
2. One HTW pump, HTWP-14 or HTWP-15, running.
3. The applicable HTW flow control valve, FXV-HTW-9 or FXV-HTW-10, open as confirmed by ZISH-FXV-9-1 or ZISH-FXV-10-1.
4. The dedicated urea pump for the genset being started, P-UR-1 and/or P-UR-2, enabled.
5. LTW cooler LTWC-1 or LTWC-2 enabled.
6. Air compressor AC-1 enabled.
7. Dedicated urea dosing panel UDP-9 or UDP-10 enabled.
8. Dedicated crankcase vent mist eliminator fan F-CV-9 or F-CV-10 running.
9. Condenser water system running to provide cooling water flow through load balance heat exchangers HX-6A and HX-6B in the CMP. This is confirmed by running status from at least one condenser water pump, P-8, P-9, P-10, or P-11, sent from the BOP to the CHP over TCP.
10. LTW flow through the ACHXs established, including FXV-LTW-9-1 for GEN-9 and FXV-LTW-10-1 for GEN-10.
11. HTW flow through the JWHXs established, including FXV-HTW-9-1 for GEN-9 and FXV-HTW-10-2 for GEN-10.
12. Fuel gas flow valve FXV-FG-1 open as indicated by ZISH-FG-1.
13. Fuel gas pressure at the inlet to the genset fuel gas train not low, as sensed by low gas pressure switches PSL-FG-9-1 for GEN-9 and PSL-FG-10-1 for GEN-10.
14. Genset breaker open.
15. All genset alarms and shutdowns cleared.
16. All switchgear alarms and shutdowns related to the genset cleared.
17. All CHP alarms and shutdowns related to the genset cleared.

8.2 Genset Startup Sequence

Upon receiving a start command, the genset performs the following sequence:

1. Performs a pre-start checkout.
2. Starts its pre-lube pump.
3. Initiates a purge by cranking the engine for a prescribed time with fuel gas train double block valves closed and ignition off.
4. Initiates the crank cycle.
5. Closes the fuel gas train vent valves and starts the engine.
6. Drops out the pre-lube pump.
7. Runs at idle speed.

As the onboard thermostats reach normal operating temperatures, the engine-driven jacket water and aftercooler water pumps begin circulating coolant through their external piping loops. Jacket water and aftercooler water temperatures are maintained by their respective temperature control valves.

Once the genset is at operating temperature and stable, the genset speed increases to 1,500 rpm. When speed is at 1,500 rpm, the genset is available to accept load in accordance with the electrical sequence and EasyGen/PMS control.

8.3 Normal Genset Operation

During normal operation, each genset performs the following functions:

1. Modulates its fuel gas control valve to maintain genset output.
2. Monitors operating parameters.
3. Alerts on abnormal conditions that do not require shutdown.
4. Alarms and shuts down on critical safeties.

Once the lead genset starts and synchronizes to the SCE grid, it operates between 50% and 100% load in thermal load following mode. If the lead genset reaches and maintains full load for more than 15 minutes and HTW temperature at TIT-HTW-3 is below 180°F, indicating that the Facility is fully using the thermal output from the lead genset, the lag genset starts either manually by the Operator or automatically based on HMI selection. When both gensets are running, they share electrical load equally as Facility thermal load changes.

When both gensets are running at or below 55% load for more than 15 minutes, the CHP control system initiates a normal shutdown of the lag genset. The lead genset continues operating in parallel with the utility in thermal load following mode. The Operator may also shut down the lag genset manually.

If only one genset is running in parallel with the utility and it fails as sensed through the switchgear PMS, the switchgear PMS alarms and starts the other genset.

A shutdown signal from the EPO system or plant fire alarm system stops all operating gensets and prevents any non-operating genset from starting until the EPO condition is cleared by the Operator.

8.4 Safety Shutdowns

8.4.1 Genset Control System Safety Shutdowns

The genset control system initiates the following shutdowns:

1. Low oil pressure immediate shutdown.
2. High coolant temperature immediate shutdown.
3. Overspeed immediate shutdown.
4. Overcrank immediate shutdown.
5. High inlet air temperature-controlled shutdown.
6. Detonation sensitive timing immediate shutdown.
7. Low fuel gas pressure-controlled shutdown.
8. Local emergency stop activated immediate shutdown.
9. Generator stator high temperature-controlled shutdown.
10. Generator bearing high temperature-controlled shutdown.

8.4.2 Switchgear PMS Safety Shutdowns

The switchgear PMS initiates the following shutdowns:

1. Generator protective relay immediate shutdown.
2. Generator breaker failed to open immediate shutdown.
3. Reverse power immediate shutdown.
4. Generator breaker trip immediate shutdown.
5. Switchgear emergency stop activated immediate shutdown.
6. Engine low coolant level-controlled shutdown.

8.4.3 CHP Safety Shutdowns

The CHP initiates the following shutdowns:

1. Loss of HTW flow to the JWHX controlled shutdown as indicated by FIT-HTW-9-1 for GEN-9 or FIT-HTW-10-1 for GEN-10.
2. Loss of LTW flow to ACHX-9 or ACHX-10 controlled shutdown as indicated by FSL-LTW-9-1 and/or FSL-LTW-10-1.
3. High HTW return temperature at TAH-HTW-4, set at 180°F, alarm only.
4. Loss of crankcase vent mist eliminator running status for F-CV-9 or F-CV-10, controlled shutdown.

8.4.4 Urea Dosing System Shutdowns

The urea dosing system initiates the following genset safety shutdowns:

1. Loss of NOx signal-controlled shutdown.
2. Urea system shutdown.

8.4.5 Immediate and Controlled Shutdown Actions

An immediate shutdown opens the genset breaker, closes the fuel gas train safety shutoff valves, opens the fuel gas train vent valve, shuts down the engine ignition system, and shuts down the genset without going through a purge. For GEN-9, the shutoff valves are SV-FG-9-1 and SV-FG-9-2 and the vent valve is SV-FG-9-3. For GEN-10, the shutoff valves are SV-FG-10-1 and SV-FG-10-2 and the vent valve is SV-FG-10-3.

A controlled shutdown reduces genset output to approximately 10% of rated output, opens the genset breaker, closes the fuel gas train safety shutoff valves, opens the fuel gas train vent valve, and after 10 seconds shuts down the engine ignition system as a purge sequence.

After the shutdown condition has been corrected, the alarm can be reset. Once reset, the genset can be restarted.

8.5 Normal Genset Shutdown Sequence

A normal shutdown can be initiated from the EMCP, the PMS, or the CHP. Upon receiving a stop command:

1. If the genset is running in parallel with the utility, the switchgear/CHP ramps down genset load at a prescribed rate of XX kW/min until the genset reaches 50% of rated load.
2. If the genset is running in stand-alone mode, islanded from the utility and in parallel with the other genset and/or diesel gensets, the CHP ramps down genset load at a prescribed rate of XX kW/min until the genset reaches 50% of rated load and/or until the other genset reserve capacity reaches 110% of the genset load.
3. Once the genset reaches minimum load, the genset breaker opens.
4. The genset goes to idle speed.
5. The cool-down timer starts.
6. After the cool-down timer expires, the fuel gas train safety shutoff valves close and the fuel gas train vent valve opens.
7. After 10 seconds, the engine ignition shuts down, completing the purge and stopping the engine.

8.6 Pre-Lube Pumps

Each genset has an electric motor-driven, skid-mounted pre-lube oil pump to circulate lube oil before the genset starts. The pre-lube pump is controlled through the genset EMCP. A shutdown signal from the EPO system or plant fire alarm system stops the pre-lube pumps.

8.7 Crankcase Vent Mist Eliminators

Each genset has a remote-mounted crankcase vent mist eliminator to remove oil mist and fumes from the engine crankcase. The CHP controls starting, stopping, and monitoring of the fan. This function is not controlled by the EMCP.

The crankcase vent mist eliminator is started by the CHP as a permissive to genset start and runs continuously while its genset operates. It continues running for 1 minute after the genset receives a normal shutdown or controlled shutdown signal from the CHP or switchgear PMS. An immediate shutdown signal or EPO signal to the genset stops the crankcase vent mist eliminator.

Fan running status is sensed in the MCC. If a running crankcase vent mist eliminator fails, the CHP alarms and shuts down the associated genset.

9 ITC Efficiency Calculations

9.1 Parasitic Power

Parasitic loads must be accounted for in determining efficiencies and include the CHP-related pumps, dry coolers, urea systems, air compressor, controls, and other auxiliary equipment, including existing CMP pumps and cooling towers, required to operate the CHP plant.

Parasitic power is determined from a combination of metered auxiliary loads in the CHP and from estimated values for CMP equipment that supports the CHP, depending on operating equipment status (on/off).

PARASITIC LOADS			
EQUIPMENT TAG NO.	LOAD (kW)	LOCATION	COMMENTS
LTWC-1/2	As-metered	CHP	
LTWP-1/2	As-metered	CHP	
CHWP-4	19	CMP	Estimated. Applies only when CH-3 running.
CTW Pump	108	CMP	Estimated. Applies only when CH-3 running.
CH-3 Absorber	16	CMP	Estimated. Applies only when CH-3 running.
HTWP-14/15	As-metered	CHP	
Air Compressor	As-metered	CHP	

EQUIPMENT TAG NO.	LOAD (kW)	LOCATION	COMMENTS
Misc Small Pumps	As-metered	CHP	
Building HVAC	As-metered	CHP	
Bldg Lighting	As-metered	CHP	
Misc Electronics	As-metered	CHP	

9.2 CHP Net Plant Efficiency

The CHP net plant efficiency for ITC purposes is calculated as the ratio of the sum of the useful electrical and thermal energy outputs to the total fuel heat input to the gensets on a lower heating value basis. All terms must be in consistent energy units, such as Btu/hr.

$\eta_{CHP} = [((P_{GENSETS} - P_{PARA}) \times 3412.1) + Q_{HTW} + Q_{CHW}] / Q_{FUEL} \times 100$

ITC requirement: $\eta_{CHP} \geq 60\%$.

Where:

1. $P_{GENSETS}$ = Gross electrical output of the gensets, kWe.

This is metered at circuit breakers, G7 and G8, for GEN9 and GEN10, respectively.

2. P_{PARA} = Total parasitic power associated with the CHP, kWe.
3. $(P_{GENSETS} - P_{PARA}) \times 3412.1$ = Net electrical output in Btu/hr.
4. Q_{HTW} = Useful thermal output used by the HHW system, DHW system, and pool water heating in Btu/hr as provided by BTU meter FIT-HTW-1.
5. Q_{CHW} = Useful thermal output utilized for chilled water production in Btu/hr as provided by FIT-CHW-1.
6. Q_{FUEL} = Total fuel input to the gensets in Btu/hr LHV, where

FI_{FG-1} is gas flow in scfm as measured by FIT-FG-1

$= FI_{FG-1} \times 60 \times LHV$ gas

LHV is the gas lower heating value from the utility, for example 905 Btu/scf.

9.3 Electrical Efficiency

$\eta_{ELEC} = [((P_{GENSETS} - P_{PARA}) \times 3412.1)] / Q_{FUEL} \times 100$

ITC requirement: η_{ELEC} must be ≥ 20%.

9.4 Data Presentation, Archival and Retention:

ITC required and actual operational parameters will be presented, including:

a. ITC required Electrical and Thermal efficiencies.

b. Actual Momentary (hourly) Electrical and Thermal efficiencies.

c. Actual Averages (daily, monthly and annual) for Electrical and Thermal efficiencies.

d. Alarm messages to notify operators if any actual operational values fall below the ITC requirements.

Actual annual-average efficiencies will be recorded in a historian and kept for minimum 5 years. Additionally, detailed reports of all calculations, instrument readings, and any operator interventions or corrections will be recorded and kept in conjunction with historian for minimum of 5 years.

Morongo CHP Efficiency Monitoring

JUNE 10TH, 2026

A. General Description

1. The project will include construction of the new Combined Heat and Power (CHP) plant to provide electricity, heating and cooling to the Morongo Resort and Casino. Major components of the plan listed below:

    a. (2) 2.5MW Caterpillar Gas Generators CG1 and CG2
    b. 2MW/4MWh Battery Energy Storage System BESS
    c. Heat recovery equipment
        i. Heat recovery Boiler
        ii. Existing Absorption Chiller
    d. Balance of plant equipment required for operating of the generators
        i. Electrical Switchgear
        ii. Pumps
        iii. Air Compressors
        iv. SCR filters with UREA insertion
    e. Air handling equipment
    f. Other equipment required for operating of the generators and use of heat rejected by them.

2. The Project is partially funded by Federal Investment Tax Credit (ITC). One of the major requirements to qualify for the ITC funding is a minimum of 60% combined electrical/thermal efficiency including a minimum 20% of thermal and electrical efficiency.

3. Higher than ITC minimum operational targets for Electrical and Thermal efficiency will be pre-set in HMI for various CHP systems. These efficiency targets will be monitored by CHP control system and displayed on HMI screens.

4. Under Normal Operation Conditions CHP Control Systems will monitor campus electrical/thermal loads and control energy generation equipment to ensure compliance with ITC required efficiencies and pre-set operational targets.

5. HMI screens in CHP Control Room will show ITC required, targeted and actual operational parameters including:

    a. ITC required and Pre-set Operational Targets for Electrical and Thermal efficiencies.

    b. Actual Momentary (hourly) Electrical and Thermal efficiencies.

    c. Actual Averages (daily, monthly and annual) for Electrical and Thermal efficiencies.

    d. Alarm messages to notify operators if any actual operational values fall before the ITC requirements or pre-set Operational targets. Operators' involvement will be required to investigate and correct issues.

6. Remote monitoring of CHP efficiencies and alarm messages will be also provided in Morongo Facility Department Offices.

7. The actual annual-average efficiencies will be recorded by CHP control system in historian and kept for minimum 5 years. Additionally, detailed records of all calculations, meter readings, and any operator interventions or corrections will be recorded and kept in historian for minimum of 5 years.

B. Definitions

1. **SCE**: South California Edison electrical utility company. SCE provides electrical service for Morongo Resort and Casino.

2. **SoCal Gas**: South California Gas utility company. SoCal Gas provides core and non-core gas (60psi) services for Morongo Resort and Casino. Non-core gas is used to supply CHP generators.

3. **CHP**: New Combine Heat and Power (CHP) plant provided by this project. It includes new, Gas Generators CG, and other electrical and mechanical equipment.

4. **Power Outage**: SCE utility power outage is defined as interruption of the utility power to Morongo Resort.

5. **Electrical Energy: W**
    a. **Wnet**: Net of ITC qualified useful electrical energy supplied by the CHP plant to Morongo electrical grid. Wnet will be determined by subtracting the energy consumed by CHP plant (Wgp+Wcp) from the energy generated by CG gas generators (Wg1+Wg2). Wnet=(Wg1+Wg2)- (Wgp+Wcp).
    b. **Wg1**: Electrical Energy generated by Gas Generator CG1 and is measured by the electrical meter on circuit breaker G7.
    c. **Wg2**: Electrical Energy generated by Gas Generator CG2 and is measured by the electrical meter on circuit breaker G8.
    d. **Wgp**: CHP Plant loads supplied from GCP switchgear and are measured by the electrical meter on circuit breaker G5.
    e. **Wcp**: Electrical loads from the existing Absorption Chiller, Cooling Towers and pump attributable to CHP process and are calculated based on supplied by these devices Thermal Energy.
    f. **Wgpu**: CHP Plant loads supplied by SCE utility from GCP switchgear when CG generators are out of service. This will be measured by the electrical meter on circuit breaker G5.

6. **Thermal Energy Q:**
    a. **Qgas**: Thermal energy of natural gas consumed by gas generators CG. Will be measured by gas meter installed in non-core gas line suppling CHP.
    b. **Qnet**: Net ITC qualified useful thermal energy supplied by CHP. Qnet will be determined by adding all ITC qualified thermal energy provided by the CHP plant including Chilled Water (Qcw) and Heating Hot Water (Qhw). Qnet=Qcw+Qhw
    c. **Qcw:** Cooling energy provided by CHP to Morongo Resort and Casino. Qcw will be determined by the temperature difference (DeltaT-cw) in Chilled Water supply (CHWS) and Chilled Water return (CHWR) and CWHS flow rate from existing Absorption Chiller.
    d. **Qhw:** Thermal energy provided by CHP for heating of Pool Complex, Space Heating and Domestic Water heating. Qhw will be determined by the temperature difference (DeltaT-hw) in Heating Hot Water supply (HHWS) and Heating Hot Water return (HHWR), and HHWS flow rate.

7. **CHP Efficiencies**:
    a. **Weff**: Electrical Efficiency. Ratio between net electrical energy supplied by CHP (Wnet) and thermal energy of natural gas consumed by gas generators CG (Qgas). Weff=Wnet/Qgas
    b. **Qeff**: Thermal Efficiency. Ratio between net thermal energy supplied by CHP (Qnet) and thermal energy of natural gas consumed by gas generators CG (Qgas). Qeff=Qnet/Qgas
    c. **WQeff**: Total combined electrical and thermal efficiency of CHP plant. Ratio between total of electrical and thermal energy supplied by CHP (Weff+Qeff) and thermal energy of natural gas consumed by gas generators CG (Qgas). WQeff=(Weff+Qeff)/Qgas. Must be over 60% average on annual basis to comply with ITC requirements.
    d. **%Weff**: Ratio between net electrical efficiency of CHP (Weff) and the total combined efficiency of CHP (WQeff). %Weff=Weff/WQeff. Must be over 20% average on annual basis to comply with ITC requirements.
    e. **%Qeff**: Ratio between net thermal efficiency of CHP (Qeff) and the total combined efficiency of CHP (WQeff). %Qeff=Qeff/WQeff. Must be over 20% average on annual basis to comply with ITC requirements.

C. <u>Monitoring of CHP efficiency.</u>

For efficiency calculations all thermal energy (Q) and all electrical energy (W) consumed and generated by the CHP plant (kWh, ton-hours, etc.) will be converted by Control System into common energy units BTU.

To comply with ITC funding requirements the CHP plant must operate above 60% of combined electrical/thermal efficiency including minimum 20% thermal and electrical efficiency.

1. Electrical efficiency (Weff) will be determined by dividing net electrical energy output from the CHP plant (Wnet) on the natural gas usage (Qgas) by gas generators. Weff = Wnet/Qgas.

a. During Normal Operations CHP will generate more electrical energy than it consumes: (Wt+Wg1) > (Wgp+Wcp).
b. During SCE power outage the Control System will switch CHP in a back-up power mode to supply required electrical energy to the resort. All efficiency monitoring and calculations will be disabled.
c. When all CHP generators are out of service due maintenance or during SoCal Gas non-core gas service interruption all efficiency monitoring and calculations will be disabled.

2. Thermal efficiency (Qeff) will be determined by dividing net thermal energy output from the CHP plant (Qnet) on the natural gas usage (Qgas) by gas generators. Qeff = Qnet/Qgas.
    a. During Normal Operations CG gas Generators will provide most of heating thermal energy supplied by CHP by Morongo Resort.
    b. When all CHP generators are out of service the efficiency monitoring will be disabled.

3. Total combined electrical and thermal efficiency WQeff will be determined by adding electrical Weff and thermal Qeff efficiencies. WQeff=Weff+Qeff. ITC requires WQeff to be over 60%.
    a. The required by ITC % electrical efficiency will be determined by dividing electrical efficiency on the total combined efficiency: %Weff= Weff/WQeff. ITC requires %Weff to be over 20% on annual average basis.
    b. The required by ITC % thermal efficiency will be determined by dividing thermal efficiency on the total combined efficiency: %Qeff= Qeff/WQeff. ITC requires %Qeff to be over 20% on annual average basis.
    c. CHP control system will monitor total combined efficiency WQeff and percentage of electrical and thermal efficiencies %Weff and %Qeff. HMI screens will display these values and display alarm messages if the actual efficiencies fall below ITC required 60% and 20%. Operator's involvement will be required to investigate and correct issues.

4. When CG generators are out of service CHP plant will receive energy directly from SCE utility company (Wgpu). Efficiency monitoring will be disabled. The estimated percentage of this energy compared to estimated total useful electrical energy

(Wnet) will be used as the base for ITC allocation for electrical switchgear, lighting and other CHP Plant equipment.

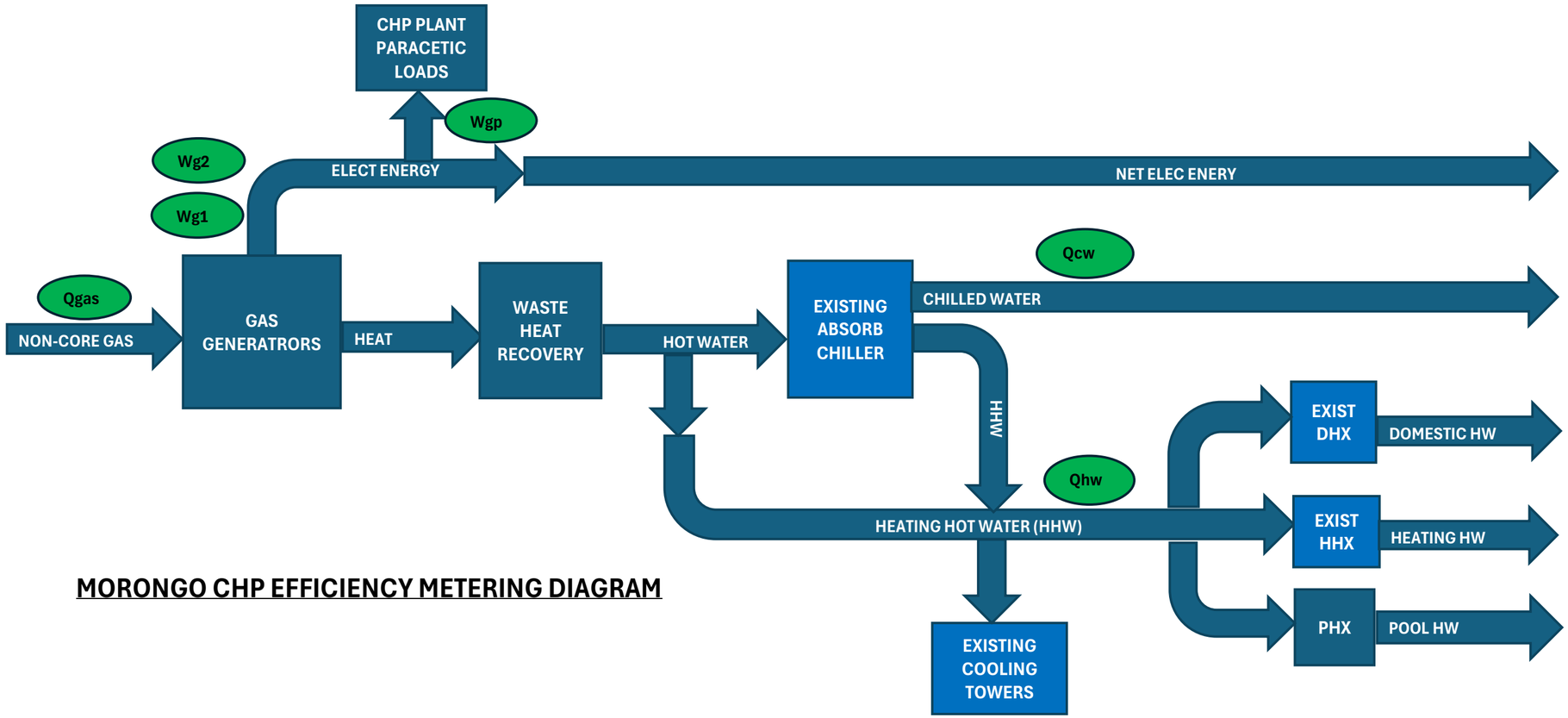

MORONGO CHP EFFICIENCY METERING DIAGRAM

System Integrator SOW – Construction and Commissioning

06/10/2026

General Scope of Work

Systems Integration Scope of Work includes responsibility for overall design, installation and commissioning for instrumentation and control systems supporting the new Combined Heat and Power (CHP) plant at Morongo Casino, Resort & Spa (MCRS). The scope includes modifications and integration with the existing and new control system for the electrical and natural gas service equipment supplied BY SCE and SoCal Gas utilities, new cogeneration gas-generators and electrical switchgear, new Waste Heat Recovery (WHR) system, existing Central Mechanical Plant (CMP), new Battery Energy Storage System (BESS), existing absorption Chiller, existing standby diesel engine-generators and their Paralleling Switchgears.

MCRS has selected Dynalectric as the System Integrator for the project. Dynalectric was a part of the project Design Team. System integration documents shall include IM, IC, and IP series drawings, specifications and Sequence of Operations (SOO). General Contractor should hire Dynalectric and any other additional subcontractors as required to complete the required in this document System Integration Construction Scope of Work.

The descriptions provided below of the tasks and deliverables for Construction phase are only intended to specify the minimum SOW. The System Integrations Scope includes all necessary tasks required for construction and commissioning of a complete and functional system.

Project Background

Morongo Casino, Resort & Spa is located in Cabazon, California in the San Gorgonio Pass area in Riverside County, between the San Gorgonio and San Jacinto Mountain ranges, approximately 20 minutes west of Palm Springs and 90 minutes east of Los Angeles. The areas of the MCRS covered by this project can be divided into two separate parts: “Original Casino” constructed in 2004 and “Casino Expansion” added more recently.

The “Casino Expansion” is served by the local electrical utility company South California Edison (SCE) while the “Original Casino” is not connected to the SCE power grid and is only served by the on-site Existing Power Plant (EPP). This EPP includes four (4) 2MW Gas Generators which operate continuously and three (3) 2MW Diesel Generators that are used during gas outages or problems with gas generators. The Central Mechanical Plant (CMP) adjacent to the EPP includes electrical chillers, absorption chiller, boilers, cooling towers,

pumps and other supporting equipment. The Existing CMP provides chilled and hot water to both Original Casino and Casino Expansion. The thermal energy recovered from the operation of existing gas generators is sent to CMP and used for cooling and heating applications.

The efficiency of the EPP is less than the current requirements for CHP plants. Due to the age and conditions of the EPP, the equipment can no longer be relied on as the only power source for the facility.

The New CHP Facility site will be within an existing employee parking lot to the north of the casino and EPP adjacent to an existing SCE electrical service yard. MCRS has already purchased two new 2,500kW Caterpillar (CAT) G3520H gas generators for the New CHP from local CAT distributor Quinn Power Systems. These generators were delivered to MCRS in December 2024 and are stored in the off-site storage facility.

MCRS shall also purchase new 2MW/4MWh Tesla Megapack BESS and provide it to the installation contractor.

The project is partially funded by federal investment tax credits ("ITC"). These credits have specific requirements, including a requirement that the combined heat and power system must have an energy efficiency percentage of at least 60%, measured on a BTU basis. Additionally, the CHP plant must produce at least 20% of its total useful energy in the form of thermal energy that is not used to produce electrical or mechanical power (or combination thereof) and must produce at least 20% of its total useful energy in the form of electrical power. The new control system must ensure compliance with these requirements.

<u>Description of Control Systems:</u>

A. PMS - Power Management System.
    1. The system monitors and controls 12kV Service, Power Generation and Power Distribution Equipment. The existing "PMS" is divided into two entities. The first, CPS- Control and Paralleling system was named by virtue of the "Original Casino" project. The second, SSE-Station Service Electrical system was named by virtue of the "Casino Expansion" project. These systems include multiple I/O cabinets, PLCs, and HMI screens in existing power plant and SCE service switchgear, 12kV switchgear for diesel generators and gas generators, control room, etc.

2. The existing CPS and SSE are set up to automatically reduce or increase on-site power generation and manage the campus load matching the generation capacity and the load.

3. The project shall update, modify and expand existing CPS and SSE system to work in conjunction with the new PMS which controls new gas generators, 12kV switchgear and modified 12kV distribution system.

B. SEL – Schweitzer Relay Network.
   1. The system monitors and controls Schweitzer protective relays located in several existing 12kV switchgears including Existing 12kV switchgear in the Power Plant and Existing SCE Service Switchgear.

   2. The existing SEL system includes safety interlocks between 12kV circuit breakers to prevent out-of-synch closing 12kV circuit breakers.

   3. The project shall expand the existing SEL system to add new SEL relays in new 12kV switchgear for new gas generators. The project shall modify the existing safety interlocks as required by re-configuration of existing 12kV distribution and add new safety interlocks for the new 12kV switchboard. The project shall also provide new system-wide Coordination and Arc Flash Studies and update the existing SEL relay settings.

C. Generator Paralleling System (GPS):
   1. The system functions as part of the CPS and is responsible for control and monitoring of existing generators. It uses Woodward MSLCs and DSLCs for synchronizing and load sharing between existing generators. The system includes PLC cabinets in 12kV switchgears for diesel and gas generators. Existing MSLCs, DSLCs and PLCs are over 25 years old and have reached end-of-life.

   2. The project shall provide a new GPS in a new 12kV switchgear for new Gas Generators. The project shall also replace the existing PLCs in the existing 12kV switchgears and replace the existing Woodward MSLCs and DSLCs with modern Woodward EasyGen equipment as required to operate all on-site generators in parallel.

D. BOP- Balance of Plant Control System.

1. BOP refers to the existing control system which monitors and/or controls chillers, heat recovery units cooling Towers, pumps, and other process utility-supporting mechanical equipment located in the Central Plant.

2. The Project shall add a new CHP (Combined Heat and Power) controller, which serves parallel function to BOP in the new CHP plant. The CHP controller shall control and/or monitor new heat recovery units, BESS- Battery Energy Storage System, generators in conjunction with PMS, dry coolers, SCR filters, Urea System, pumps, heat exchangers and other process utility-supporting mechanical equipment located in the new CHP building. Control of urea dosing shall be performed by OEM-provided controller. The Project shall interconnect the new CHP controller with the existing BOP controller to integrate functionality of cooling towers, absorption chiller, electric centrifugal chillers, pumps, etc. located in the existing central mechanical plant.

3. The project shall also migrate the existing BOP HMI screens, and provide new HMI screens in the new control room to under one common system for both plants.

E. Equipment Control Systems (ECS):
   1. These systems are provided with equipment and include control panels, VFDs, Starters and other controllers located on BESS, generators, SCR/UREA filters, air compressors, pumps, dry coolers, fans, etc. These systems use various software and include local monitoring and control devices or HMI screens.

   2. The project shall include connecting of various field devices required for operation of ECS and integrating ECS equipment with CHP and PMS control systems.

<u>Specific System Integration Scope of Work</u>

A. <u>Construction Phase</u>
   1. The Construction Scope of Work for the System Integration includes required modifications to the existing CPS, SSE and BOP and construction of the new expanded PMS and CHP to operate the generators, BESS, absorption chiller, heat recovery units, diesel generators and other mechanical and electrical equipment to perform functions described in Sequence of Operations. The SOW includes coordination with all other members of the construction team and manufacturers of the existing new equipment.

2. The Scope of Work includes new control, monitoring and synchronizing control system for Paralleling Switchgear (GPS), integrating the control functions of circuit breaker control and protective relaying. System operation and load management for all modes of operation shall be included. Synchronizing and control/ monitoring of the cogeneration generators and standby diesel engine-generators shall be included. The protective relaying is an integral part of the operational sequence so the PMS must monitor the relay data as well as recording the event data.

3. The Scope of Work includes System Integration with the existing 12 kV Main Service Switchgear SSE1 supplied by SCE and the existing 12kV Paralleling Switchgear CPS located in Existing Power Plant (EPP).

4. <u>Descriptions of the tasks:</u>
   a) Perform additional field investigations required to confirm characteristics of the existing electrical and mechanical equipment and verify operations of the existing control systems including but not limited to CPS and BOP.
   b) Coordinate with manufacturers of the existing and new electrical and mechanical equipment.
   c) Coordinate with other members of the design, construction and operation team. Include site coordination meetings and weekly web conferences.
   d) Finalize Sequence of Operation (SOO) for the PMS and CHP.
   e) Perform Control Systems Integration to ensure that all systems (existing and new) work together including but not limited to:
      (i) Existing 12 kV power distribution and control system
      (ii) Existing CPS and SSE
      (iii) Existing BOP
      (iv) Existing CPS Switchgear for the Diesel Generators.
      (v) New GCP Switchgear for Gas Generators.
      (vi) New BESS
      (vii) Motor Control Centers.
      (viii) Protective Relay system.
      (ix) New 2.5 MW Gas Generators and their auxiliaries.
      (x) Existing Absorption chiller and its auxiliaries
      (xi) Existing Chillers and Boilers and their auxiliaries.
      (xii) New Pumps and Fans with their VFDs and control panels.
   f) Provide integration hardware and components of the PMS and CHP.
   g) Provide required modifications to the existing CPS and BOP.

h) Provide interconnection between all components of CHP including interconnections between control panels for generators, chillers, heat recovery units, and auxiliary equipment (fans, pumps, etc.) controlled independently from CHP.
i) Develop test procedures for commissioning of the CHP and PMS.

5. The Construction shop drawing shall include:
   a) Block diagrams identifying new control enclosures and interconnections between new and existing equipment.
   b) Detailed Sequence of Operations (SOO).
   c) As-built modifications to Process Instrumentation and Control diagrams.
   d) I&C wiring schematics with point-to-point interconnection detail.
   e) Cabling schedules in MS Excel format. The schedules shall identify origin, termination, type and size of interconnection cables between components and equipment controlled or monitored by the PMS and CHP, and between Control Panels for Generators, Absorption Chiller, Boilers and their auxiliary equipment (fans, pumps, etc.) controlled independently from CHP
   f) Layout for each new control enclosure.
   g) Wiring diagrams for required modifications to the existing CPS, SSE, and BOP.
   h) HMI system application development.
   i) I/O list in MS Excel format.
   j) List and description of field instruments.
   k) Description of HMI software.
   l) Description PC based Operators Stations.
   m) Test procedures for Site Acceptance Testing (SAT) of the CHP and PMS.

6. Construction and Commissioning Activities:
   a) The Construction and Commissioning Phase Scope of Work for the System Integrator includes modifying existing CPS, SSE and BOP, and construction of the new expanded CHP and PMS to operate the gas generators, BESS, absorption chiller, boilers, diesel generators and other mechanical and electrical equipment to perform functions described in Sequence of Operations. This includes coordination with all other members of the construction team and manufacturers of the existing new equipment.
   b) Description of tasks:
      (i) Manufacture the control enclosures for all required control systems.
      (ii) Develop HMI software to the support Sequence of Operation(s)
      (iii) Build PC based desktop Operators Station running HMI software.

(iv) Build PC based desktop View-Only Station running HMI software.

(v) Purchase all required field instruments. Ensure calibration certificates are included with hardware.

(vi) Perform Factory Acceptance Testing (FAT) of the Control Enclosures and HMI software. Morongo and design team reserves the right to participate in the shop testing.

(vii) Review Shop Drawings for the Electrical Switchgear and Mechanical equipment and make the required modifications to I&C interconnection diagrams and Cable Schedule.

(viii) Provide Control Enclosures, Operation Stations and field instruments to the project site.

(ix) Coordinate with Electrical Contractor for any conduit/cable within the IP drawing set that ties to integration equipment and/or coordinate with electrical contractor on any main trunk lines which may house integration control cables/fiberoptics

(x) Perform testing and start-up of the control systems. Commissioning assistance with owner provided commissioning agent

(xi) Perform 16 hours of site training for the Owner's Plant operators.

(xii) Provide as-built drawing set, and final Sequence of Operations (SOO) for control systems.

7. Warranty

Provide full warranty for the control systems, including all parts and labor, for one-year period.

SECTION 000103 - PROJECT DIRECTORY

PART 1 GENERAL

1.1 SECTION INCLUDES

A. Identification of project team members and their contact information.

1.2 OWNER:

A. Name: Morongo Resort and Casino
   1. Address Line 1: 49566 Seminole Drive.
   2. City: Cabazon.
   3. State: California.
   4. Zip Code: 92230.

B. Primary Contact: All correspondence from the Contractor to the Architect will be through this party, unless alternate arrangements are mutually agreed upon at preconstruction meeting.
   1. Name: Alex Sephton.
   2. Email: asephton@morongo-nsn.gov.

1.3 CONSULTANTS:

A. Architect: Design Professional of Record. All correspondence from the Contractor regarding construction documents authored by Architect's consultants will be through this party, unless alternate arrangements are mutually agreed upon at preconstruction meeting.
   1. Company Name: Delawie.
      Address Line 1: 1515 Morena Boulevard.
      City: San Diego.
      State: California.
      Zip Code: 92110.
      Telephone: 619-299-6690.
   2. Primary Contact:
      a. Title: Prinicpal.
         Name: Mike Asaro.
         Email: masaro@delawie.com.
      b. Title: Project Architect.
         Name: Clayton Herndon, Senior Associate.
         Email: cherndon@delawie.com.

B. Civil / Structural Engineering Consultant:
   1. Company Name: Pac Rim.
      Address Line 1: 9320 Chesapeake Drive.
      City: San Diego.
      State: California.
      Zip Code: 92123.
      Telephone: 619-930-9779.
   2. Primary Contact:
      Title: Principal.
      Name: Jerry Dunaway.
      Email: jdunaway@pacrimengineering.com..
      Title: Civil.
      Name: James Moser.
      Email: jmoser@pacrimengineering.com.
      a. Title: Structural.

Name: Kamran Askarian.
Email: kaskarian@pacrimengineering.com.

C. Mechanical / Plumbing / Electrical Engineering Consultant:

1. Company Name: ELEN Consulting, Inc.
   Address Line 1: 9150 Chesapeake Drive.
   Address Line 2: Suite 220.
   City: San Diego.
   State: California.
   Zip Code: 92123.
   Telephone: 619-550-1085.
2. Primary Contact:
   a. Title: Principal.
      Name: Dimitriy Nathanson.
      Email: dnathanson@elenconsulting.com.
   b. Title: Mechanical.
      Name: David Wolf.
      Email: dwolf@elenconsulting.com.
   c. Title: Electrical.
      Name: Cory Murphy.
      Email: cmurphy@elenconsulting.com.

PART 2 PRODUCTS - NOT USED

PART 3 EXECUTION - NOT USED

END OF SECTION

SECTION 003100 - AVAILABLE PROJECT INFORMATION

PART 1 GENERAL

1.1 EXISTING CONDITIONS

A. Certain information relating to existing surface and subsurface conditions and structures is available to bidders but will not be part of Contract Documents, as follows:

B. Geotechnical Report: Entitled Morongo Combined Heating and Power - Geotechnical Exploration, dated September 10, 2025.

1. This report identifies properties of below grade conditions and offers recommendations for the design of foundations, prepared primarily for the use of the Architect and Engineers.
2. The recommendations described shall not be construed as a requirement of this Contract, unless specifically referenced in Contract Documents.
3. This report, by its nature, cannot reveal all conditions that exist on the site. Should subsurface conditions be found to vary substantially from this report, changes in the design and construction of foundations will be made, with resulting credits or expenditures to the Contract Price accruing to Owner.
4. The report is available for the Contractor's information, but is not a warranty of subsurface conditions.
5. Contractor shall visit the site and become familiar with existing conditions.

PART 2 PRODUCTS - NOT USED

PART 3 EXECUTION

3.1 EXAMINATION

A. The Contractor may take additional soil borings or make other explorations, without additional cost to the Owner, to make further determinations of site soil or subsurface conditions. Coordinate additional exploratory Work with Architect and Owner so as not to interfere with Owner’s use of the site.

END OF SECTION

SECTION 007343 - WAGE RATE AND DOMESTIC CONTENT FOR INNOVATE TAX CREDITS REQUIREMENTS

REQUIREMENTS

1.1 PREVAILING WAGE ACT (PWA)

A. Contractorand subcontractors must comply with Internal Revenue Code (IRC) §48(a)(10) and applicable Federal prevailing wage and apprenticeship regulations under Treasury Regulations 1.45-6, -7, -8, -12.
B. Pay all laborers and mechanics prevailing wages and fringe benefits as determined by the Department of Labor (DOL).
C. Submit expected labor classifications before work begins. 30 day time frame is suggested.
D. Provide weekly certified payroll. Additionally provide payroll records, paystubs, copy of checks, and timesheets – if unavailable provide certified payroll records and retain above information. Contractor and subcontractors should make available in event of audit.
E. Share supplemental wage determinations and classification updates within 45 days of starting work with the Owner.
F. Flow down all requirements to subcontractors via contracts.
G. Maintain all documentation (contracts, payroll records, paystubs, etc.) for a period of 7 years after the project is complete.
H. Contractor is responsible for underpayments, interest, and penalties if prevailing wages are not paid.
I. If unresolved, Contractor bears the risk of reduced tax credits upon Internal Revenue Service (IRS) review.
J. Ensure 15 percent of total labor hours are performed by qualified apprentices.
K. Follow DOL, State, or program-specific apprentice to journeyworker ratios.
L. Submit apprenticeship agreements and membership cards for all apprentices.
M. Contractor and subcontractors must employ at least 1 apprentice if employer has 4 or more laborers or mechanics on the project.
N. Follow requirement to request apprentices from a registered program in the timeframe provided under Treasury Regulations 1.45-8(f)(1). Forward requests within 5 days of submission. Document denied apprentice requests to claim good faith exception and provide to Owner.

1.2 DOMESTIC CONTENT (DC)

A. As the Domestic Content adder provides a valuable and important tax benefit for Morongo, Contractor work with Morongo and its tax advisor, KPMG , and any suppliers or manufactures to obtain the direct cost information for all manufactured products.
B. Contractor will comply with IRC §45(a)(9) and ensure that any steel, iron, or manufactured product which is a component of such facility was produced in the United States as determined under 49 § Code of Federal Regulations (CFR) 661 in a manner consistent with IRS Notice 2023-38.
C. Contractor will work with Morongo tax advisor, KPMG, to identify all manufactured products and subcomponents in a manner consistent with Notice 2023-38, Notice 2024-41 and Notice 2025-08.
D. Although not anticipated, in the event that domestic content is not met, Contractor will work with advisors to ensure that wavier requirements are met so that Morongo may avoid any elective pay phaseout.
E. Failure to provide the required certifications, cost breakdowns, or documentation may result in disqualification from consideration or termination of any resulting contract.

END OF DOCUMENT

SECTION 011000 - SUMMARY

PART 1 GENERAL

1.1 PROJECT

A. Project Name: 24231 - MORONGO CHP PROJECT
B. Owner's Name: Morongo Resort and Casino.
C. Architect's Name: Delawie.
D. Additional Project contact information is specified in Section 000103 - Project Directory.
E. The Project consists of the construction of:
   1. An approximately 8,400 square foot concrete masonry building with a mezzaine and fully accessible roof level for heating and power generation equipment.
   2. Secured enclosure yard for separate battery energy storage system (BESS).
   3. Upgrades to existing infrastructure.

1.2 CONTRACT DESCRIPTION

A. Contract Type: Guaranteed Maximum Price (GMP).
B. The drawings and specifications indicate the general scope of the Project in terms of the design concept, dimensional profiles, major elements, and materials. The drawings and specifications do not necessarily indicate or describe all of the construction required for the full completion of the Work. The Contractor and the Trade Contractors shall adjust their time and cost estimates and associated contingencies so as to furnish all items and labor required for the full completion of the Work as reasonably inferable from the documents herein.
C. Deferred Approvals: The following scope is part of a deferred approval, as defined in 013000 - Administrative Requirements, in which professional engineering responsibility and other requirements are delegated to the Contractor:
   1. As indicated on drawings and as specified.

1.3 WORK BY OWNER

A. Cooperate fully with Owner, so work may be carried out smoothly, without interfering with or delaying work under this Contract or work by Owner. Coordinate the work of this Contract with work performed by Owner.
B. Owner will supply the following for installation by Contractor:
   1. Existing boilers and chillers in South Central plant to be inspected, upgraded per Mechanical/Electrical requirements, and moved to new location per phasing information provided in MEP documents.

1.4 OWNER OCCUPANCY

A. Owner intends to continue to occupy adjacent buildings on property and operate a fully functional business during the entire construction period.
B. Owner intends to occupy the Project upon Substantial Completion.
   1. Architect will prepare a Certificate of Substantial Completion for the Work to be occupied prior to Owner acceptance of the completed Work.
   2. Obtain a Certificate of Occupancy from authorities having jurisdiction before limited Owner occupancy.
   3. Before limited Owner occupancy, mechanical and electrical systems shall be fully operational, and required tests and inspections shall be successfully completed. On occupancy, Owner will operate and maintain mechanical and electrical systems serving occupied portions of Work.
   4. On occupancy, Owner will assume responsibility for maintenance and custodial service for occupied portions of Work.
C. Cooperate with Owner to minimize conflict and to facilitate Owner's operations.
D. Schedule the Work to accommodate Owner occupancy.
E. Notify Owner not less than 72 hours in advance of activities that will affect Owner's operations.

F. Coordinate construction schedule and operations with Owner.

1.5 CONTRACTOR USE OF SITE AND PREMISES

A. Construction Operations:
   1. Locate and conduct construction activities in ways that will limit disturbance to site.
B. Provide access to and from site as required by law and by Owner:
   1. Emergency Building Exits During Construction: Keep all exits required by code open during construction period; provide temporary exit signs if exit routes are temporarily altered.
   2. Do not obstruct roadways, sidewalks, or other public ways without permit.
C. Time Restrictions:
   1. Limit work to hours as mutually agreed to with Owner.
D. Utility Outages and Shutdown:
   1. Do not disrupt or shut down life safety systems, including but not limited to fire sprinklers and fire alarm system, without 7 days notice to Owner and authorities having jurisdiction.
   2. Prevent accidental disruption of utility services to other facilities.
   3. Notify Owner not less than 7 days in advance of proposed utility interruptions.
   4. Noise, Vibration, Dust and Odors: Notify Owner not less than 7 days in advance of proposed disruptive operation and obtain written permission befor proceeding.
E. Smoking and Controlled Substance Restrictions: Use of tobacco products, alcoholic beverages, and other controlled substances is not permitted.
F. Condition of Existing Grounds: Maintain portions of existing grounds, landscaping, and hardscaping affected by construction operations throughout construction period. Repair damage caused by construction operations.

1.6 WORK SEQUENCE

A. Coordinate construction schedule and operations with Owner.

1.7 SPECIFICATION AND DRAWING CONVENTIONS

A. Specification Content: The specifications use certain conventions for the style of language and the intended meaning of certain terms, words, and phrases when used in particular situations. These conventions are as follows:
   1. Imperative mood and streamlined language are generally used in the specifications. The words "shall," "shall be," or "shall comply with," depending on the context, are implied where a colon (:) is used within a sentence or phrase.
   2. Text Color: Text used in the specifications, including units of measure, manufacturer and product names, and other text may appear in multiple colors or underlined as part of a hyperlink; no emphasis is implied by text with these characteristics.
   3. Hypertext: Text used in the specifications may contain hyperlinks. Hyperlinks may allow for access to linked information that is not residing in the specifications. Unless otherwise indicated, linked information is not part of the Contract Documents.
   4. Specification requirements are to be performed by Contractor unless specifically stated otherwise.
B. Division 00 Contracting Requirements: General provisions of the Contract, including general and supplementary conditions, apply to all sections of the specifications.
C. Division 01 General Requirements: Requirements of sections in Division 01 apply to the Work of all Sections in the Specifications.
D. Drawing Coordination: Requirements for materials and products identified on drawings are described in detail in the specifications. One or more of the following are used on drawings to identify materials and products:
   1. Terminology: Materials and products are identified by the typical generic terms used in the individual specifications sections.
   2. Abbreviations: Materials and products are identified by abbreviations scheduled on drawings and published as part of the United States National Computer Aided Design (CAD) Standard.
   3. Keynoting: Materials and products are identified by reference keynotes referencing specification section numbers found in this project manual.

1.8 MISCELLANEOUS PROVISIONS

A. The intent of the Contract Documents is to include all items necessary for the proper execution and completion of the Work by the Contractor. The Contract Documents are complimentary, and what is required by any one shall be as binding as if required by all; performance by the Contractor shall be required by the extent consistent with the Contract Documents and reasonably inferable from them as being necessary to produce the indicated results.

1.9 WARRANTY

A. The Contractor warrants to the Owner and Architect that materials and equipment furnished under the Contract will be of good quality and new unless the Contract Documents require or permit otherwise. The Contractor further warrants that the Work will conform to the requirements of the Contract Documents and will be free from defects, except for those inherent in the quality of the Work the Contract Documents require or permit. Work, materials, or equipment not conforming to these requirements may be considered defective. If required by the Owner or Architect, the Contractor shall furnish satisfactory evidence as to the kind and quality of materials and equipment.

1.10 CORRECTION OF WORK

A. Before or After Substantial Completion.
   1. The Contractor shall promptly correct work rejected by the Architect and/or Owner or failing to conform to the requirements of the Contract Documents, whether discovered before or after Substantial Completion and whether or not fabricated, installed, or completed. Costs for correcting such rejected work, including additional testing and inspections and compensation for the Architect's services and expensed made necessary thereby, shall be at the Contractor's expense.

B. After Substantial Completion.
   1. In addition to the Contractor's obligations under the "Warranty" paragraph above, if, within one year after the date of Substantial Completion of the Work or designated portion thereof or after the date for commencement of warranties, or by terms of an applicable special warranty required by the Contract Documents, any of the Work is found to be not in accordance with the requirements of the Contract Documents, the Contractor shall correct it promptly after written notice from the Owner to do so unless the Owner has previously given the Contractor a written acceptance of such condition.

PART 2 PRODUCTS - NOT USED

PART 3 EXECUTION - NOT USED

END OF SECTION

SECTION 012000 - PRICE AND PAYMENT PROCEDURES

PART 1 GENERAL

1.1 SECTION INCLUDES

A. Procedures for preparation and submittal of applications for progress payments.
B. Documentation of changes in Contract Sum and Contract Time.
C. Change procedures.
D. Correlation of Contractor submittals based on changes.
E. Procedures for preparation and submittal of application for final payment.

1.2 RELATED REQUIREMENTS

A. Section 012100 - Allowances: Payment procedures relating to allowances.

1.3 DEFINITIONS

A. Schedule of Values: A statement furnished by Contractor allocating portions of the Contract Sum to various portions of the work and used as the basis for reviewing Contractor's Applications for Payment.

1.4 SCHEDULE OF VALUES

A. Use Schedule of Values Form: AIA G703, edition stipulated in the Agreement.
B. Electronic media printout including equivalent information will be considered in lieu of standard form specified; submit draft to Architect for approval.
C. Forms filled out by hand will not be accepted.
D. Submit Schedule of Values in duplicate within 15 days after date of Owner-Contractor Agreement.
E. Format: Utilize the table of contents of this Project Manual. Identify each line item with number and title of the specification section. Identify site mobilization.
    1. Arrange the schedule of values in tabular form, with separate columns to indicate the following for each item listed:
        a. Related specification section or division.
        b. Name of subcontractor.
        c. Name of manufacturer or fabricator.
        d. Name of supplier.
        e. Change Orders (numbers) that affect value.
        f. Dollar value of the following, as a percentage of the Contract Sum to nearest one-hundredth percent, adjusted to total 100 percent. Round dollar amounts to whole dollars, with total equal to Contract Sum.
            1) Labor.
            2) Materials.
            3) Equipment.
    2. Provide a breakdown of the Contract Sum in enough detail to facilitate continued evaluation of applications for payment and progress reports. Provide multiple line items for principal subcontract amounts in excess of five percent of the Contract Sum.
    3. Provide a separate line item in the schedule of values for each part of the work where applications for payment may include materials or equipment purchased or fabricated and stored, but not yet installed.
        a. Differentiate between items stored on-site and items stored off-site.
    4. Allowances: Provide a separate line item in the schedule of values for each allowance. Show line-item value of unit-cost allowances, as a product of the unit cost, multiplied by measured quantity. Use information indicated in the Contract Documents to determine quantities.
    5. Purchase Contracts: Provide a separate line item in the schedule of values for each purchase contract. Show line-item value of Purchase contract. Indicate Owner payments or deposits, if any, and balance to be paid by Contractor.

6. Overhead Costs, Proportional Distribution: Include total cost and proportionate share of general overhead and profit for each line item.
7. Overhead Costs, Separate Line Items: Show cost of temporary facilities and other major cost items that are not direct cost of actual work-in-place as separate line items.
8. Temporary Facilities: Show cost of temporary facilities and other major cost items that are not direct cost of actual work-in-place as separate line items.
9. Closeout Costs. Include separate line items under Contractor and principal subcontracts for project closeout requirements in an amount totaling five percent of the Contract Sum and subcontract amount.
10. Schedule of Values Revisions: Revise the schedule of values when Change Orders or Construction Change Directives result in a change in the Contract Sum. Include at least one separate line item for each Change Order and Construction Change Directive.

F. Revise schedule to list approved Change Orders, with each Application for Payment.

1.5 APPLICATIONS FOR PROGRESS PAYMENTS

A. Payment Period: Submit at intervals stipulated in the Agreement.
B. Use Form AIA G732 and Form AIA G703, edition stipulated in the Agreement.
C. Each Application for Payment following the initial Application for Payment shall be consistent with previous applications and payments, as certified by Architect and paid for by Owner.
D. Electronic media printout including equivalent information will be considered in lieu of standard form specified; submit sample to Architect for approval.
E. Forms filled out by hand will not be accepted.
F. Initial Applicaton for Payment: For each item, provide a column for listing each of the following:
1. Item Number.
2. Description of work.
3. List of subcontractors.
4. Contractor's construction schedule (preliminary if not final).
5. Products list (preliminary if not final).
6. Submittal schedule (preliminary if not final).
7. Scheduled Values.
8. Sustainable design action plans, including preliminary project materials cost data.
9. Work in Place and Stored Materials under this Application.
10. Schedule of unit prices.
11. Authorized Change Orders.
12. Total Completed and Stored to Date of Application.
13. Balance to Finish.
14. Retainage.
15. List of Contractor's staff assignments.
16. List of Contractor's principal consultants.
17. Copies of building permits, authorizations and licenses from authorities having jurisdiction for performance of the Work.
18. Initial progress report.
19. Report of preconstruction conference.
20. Certificates of insurance and insurance policies.
21. Performance and payment bonds.
22. Data needed to acquire Owner's insurance.
G. Execute certification by signature of authorized officer. Architect will return incomplete applications without action.
H. Use data from approved Schedule of Values. Provide dollar value in each column for each line item for portion of work performed and for stored products.
I. List each authorized Change Order as a separate line item, listing Change Order number and dollar amount as for an original item of work.
J. Submit one electronic and three hard-copies of each Application for Payment.

K. Stored Materials: Include in Application for Payment amounts applied for materials or equipment purchased or fabricated and stored, but not yet installed. Differentiate between items stored on-site and items stored off-site.
   1. Provide certificate of insurance, evidence of transfer of title to Owner, and consent of surety to payment for stored materials.
   2. Provide supporting documentation that verifies amount requested, such as paid invoices. Match amount requested with amounts indicated on documentation; do not include overhead and profit on stored materials.
   3. Provide summary documentation for stored materials indicating the following:
      a. Value of materials previously stored and remaining stored as of date of previous Applications for Payment.
      b. Value of previously stored materials put in place after date of previous Application for Payment and on or before date of current Application for Payment.
      c. Value of materials stored since date of previous Application for Payment and remaining stored as of date of current Application for Payment.

L. Waivers of Mechanic's Lien: With each Application for Payment, submit waivers of mechanic's lien from entities lawfully entitled to file a mechanic's lien arising out of the Contract and related to the Work covered by the payment.
   1. Submit partial waivers on each item for amount requested in previous application, after deduction for retainage, on each item.
   2. When an application shows completion of an item, submit conditional final or full waivers.
   3. Owner reserves the right to designate which entities involved in the Work must submit waivers.
   4. Submit final Application for Payment with or preceded by conditional final waivers from every entity involved with performance of the Work covered by the application who is lawfully entitled to a lien.
   5. Waiver Forms: Submit executed waivers of lien on forms acceptable to Owner.

M. Include the following with the application:
   1. Transmittal letter as specified for submittals in Section 013000.
   2. Construction progress schedule, revised and current as specified in Section 013000.
   3. Current construction photographs specified in Section 013000.
   4. Partial release of liens from major subcontractors and vendors.
   5. Project record documents as specified in Section 017800, for review by Owner which will be returned to the Contractor.
   6. Affidavits attesting to off-site stored products.

1.6 MODIFICATION PROCEDURES

A. For minor changes not involving an adjustment to the Contract Sum or Contract Time, Architect will issue instructions directly to Contractor.

B. For other required changes, Architect will issue a document signed by Owner instructing Contractor to proceed with the change, for subsequent inclusion in a Change Order.
   1. The document will describe the required changes and will designate method of determining any change in Contract Sum or Contract Time.
   2. Promptly execute the change.

C. For changes for which advance pricing is desired, Architect will issue a document that includes a detailed description of a proposed change with supplementary or revised drawings and specifications, a change in Contract Time for executing the change with a stipulation of any overtime work required and the period of time during which the requested price will be considered valid. Contractor shall prepare and submit a fixed price quotation within 15 days.

D. Contractor may propose a change by submitting a request for change to Architect, describing the proposed change and its full effect on the work, with a statement describing the reason for the change, and the effect on the Contract Sum and Contract Time with full documentation and a statement describing the effect on work by separate or other contractors. Comply with requirements in Section 012500 - Substitution Procedures if the proposed change requires substitution of one product or system for product or system specified.

E. Computation of Change in Contract Amount: As specified in the Agreement and Conditions of the Contract.

F. Execution of Change Orders: Upon Owner's approval, Contractor will issue Change Orders for signatures of parties as provided in the Conditions of the Contract.

1.7 APPLICATION FOR PAYMENT AT SUBSTANTIAL COMPLETION

A. After Architect issues the Certificate of Substantial Completion, submit an Application for Payment showing 100 percent completion for portion of the work claimed as substantially complete.
   1. Include documentation supporting claim that the work is substantially complete and a statement showing an accounting of changes to the Contract Sum.
      a. Complete administrative actions, submittals, and work preceding this application, as described in Section 017000 - Execution and Closeout Requirements.
   2. This application shall reflect Certificate(s) of Substantial Completion issued previously for Owner occupancy of designated portions of the Work.

1.8 APPLICATION FOR FINAL PAYMENT

A. Prepare Application for Final Payment as specified for progress payments, identifying total adjusted Contract Sum, previous payments, and sum remaining due.
   1. Evidence of completion of Project closeout requirements.
   2. Certification of completion of final punch list items.
   3. Insurance certificates for products and completed operations where required and proof that taxes, fees, and similar obligations were paid.
   4. Updated final statement, accounting for final changes to the Contract Sum.
   5. AIA Documents G706, G706A, G707.
   6. Evidence that claims have been settled.
   7. Final meter readings for utilities, a measured record of stored fuel, and similar data as of date of Substantial Completion or when Owner took possession of and assumed responsibility for corresponding elements of the work.
   8. Final liquidated damages settlement statement.
   9. Proof that taxes, fees, and similar obligations are paid.
   10. Waivers and releases.

PART 2 PRODUCTS - NOT USED

PART 3 EXECUTION - NOT USED

END OF SECTION

SECTION 012100 - ALLOWANCES

PART 1 GENERAL

1.1 SECTION INCLUDES

A. Cash allowances.
B. Contingency allowance.

1.2 RELATED REQUIREMENTS

A. Section 012000 - Price and Payment Procedures: Additional payment and modification procedures.

1.3 DEFINITIONS

A. Allowance: A quantity of work or dollar amount included in the Contract, established in lieu of additional requirements, used to defer selection of actual materials and equipment to a later date when direction will be provided to Contractor. If necessary, additional requirements will be issued by Change Order.

1.4 CASH ALLOWANCES

A. Costs Included in Cash Allowances: Cost of product to Contractor or subcontractor, less applicable trade discounts, less cost of delivery to site , less applicable taxes .
B. Costs Not Included in Cash Allowances: Product delivery to site and handling at the site, including unloading, uncrating, and storage; protection of products from elements and from damage; and labor for installation and finishing.
C. Unused Materials: Return unused materials purchased under an allowance to manufacturer or supplier for credit to Owner, after installation has been completed and accepted.
    1. If requested by Architect, retain and prepare unused material for storage by Owner. Deliver unused material to Owner's storage space as directed.

1.5 CONTINGENCY ALLOWANCE

A. Where the General Conditions and/or Supplementary Conditions include contingency allowances, use the contingency allowance only as directed by Owner for Owner's purposes and only by Change Orders that indicate amounts to be charged to the allowance.
B. Contractor's costs for products, delivery, installation, labor, insurance, payroll, taxes, bonding, equipment rental, overhead and profit will be included in Change Orders authorizing expenditure of funds from this Contingency Allowance.
C. Funds will be drawn from the Contingency Allowance only by Change Order.
D. At closeout of Contract, funds remaining in Contingency Allowance will be credited to Owner by Change Order.

1.6 ADJUSTMENT OF ALLOWANCES

A. Allowance Adjustment: To adjust allowance amounts, prepare a Change Order proposal based on the difference between purchase amount and the allowance, multiplied by final measurement of work-in-place where applicable. If applicable, include reasonable allowances for cutting losses, tolerances, mixing wastes, normal product imperfections, required maintenance materials, and similar margins.
    1. Include installation costs in purchase amount only where indicated as part of the allowance.
    2. If requested, prepare explanation and documentation to substantiate distribution of overhead costs and other markups.
    3. Submit substantiation of a change in scope of Work, if any, claimed in Change Orders related to unit-cost allowances.
    4. Owner reserves the right to establish the quantity of work-in-place by independent quantity survey, measure, or count.

B. Submit claims for increased costs due to a change in the scope or nature of the allowance described in the Contract Documents, whether for the purchase order amount or Contractor's handling, labor, installation, overhead, and profit.

1. Do not include Contractor's or subcontractor's indirect expense in the Change Order cost amount unless it is clearly shown that the nature or extent of Work has changed from what could have been foreseen from information in the Contract Documents.
2. No change to Contractor's indirect expense is permitted for selection of higher- or lower-priced materials or systems of the same scope and nature as originally indicated.

1.7 SUBMITTALS

A. Submit proposals for purchase of products or systems included in allowances in the form specified for Change Orders.
B. Submit invoices or delivery slips to show actual quantities of materials delivered to the site for use in fulfillment of each allowance.
C. Submit time sheets and other documentation to show labor time and cost for installation of allowance items that include installation as part of the allowance.
D. Coordinate and process submittals for allowance items in same manner as for other portions of the Work.

1.8 ALLOWANCES SCHEDULE

A. Lump Sum Allowances:

1. Allowance No. LS-1: Hydraulic Cement Underlayment Lump-Sum Allowance: Include in the sum an allowance for floating concrete floor substrates with hydraulic cement underlayment which are not in compliance with specified tolerances and finish flooring manufacturer’s written limitations.
2. Allowance No. LS-2: Moisture Vapor Emission Control Lump-Sum Allowance: Include in the sum an allowance for application of moisture vapor emission control system that controls the moisture-vapor-emission rate of high-moisture interior concrete floor slabs which are not in compliance with finish flooring manufacturer’s written limitations.
3. Allowance No. LS-3: Door Hardware: Include in the sum an allowance for door hardware until such time as the door hardware sets have been defined.

B. Contingency Allowances:

1. Allowance No. C-1, (As Applicable): Include contingency allowance(s) in accordance with General Conditions and/or Supplementary Conditions.

PART 2 PRODUCTS - NOT USED

PART 3 EXECUTION - NOT USED

END OF SECTION

SECTION 012500 - SUBSTITUTION PROCEDURES

PART 1 GENERAL

1.1 SECTION INCLUDES

A. Procedural requirements for proposed substitutions.
   1. Substitutions for cause.
   2. Substitutions for convenience.
      a. Architect will consider substitution for convenience requests if written request and all of the supporting action submittals are received by the Architect within the time limitations established by the General Conditions for substitutions. If no time limit is established in the General Conditions for substitutions, Architect will consider substitution within the time limitations noted in this Section. Requests received after that time may be considered or rejected at discretion of Architect.
   3. Refer to Section 016000 - Product Requirements for comparable products being submitted for consideration as one of the following:
      a. Or Equal.
      b. Or Comparable Equal.

1.2 RELATED REQUIREMENTS

A. Section 013000 - Administrative Requirements: Submittal procedures, coordination.
B. Section 016000 - Product Requirements: Fundamental product requirements, product options, delivery, storage, and handling.
C. Section 016116 - Volatile Organic Compound (VOC) Content Restrictions: Restrictions on emissions of indoor and outdoor substitute products.
D. Division 02 through 33 Sections for specific product and manufacturer requirements and for limitations on substitutions.

1.3 DEFINITIONS

A. Substitutions: Changes from Contract Documents requirements proposed by Contractor to materials, products, assemblies, and equipment.
   1. Substitutions for Cause: Proposed due to changed Project circumstances beyond Contractor's control.
      a. Unavailability.
      b. Regulatory changes.
   2. Substitutions for Convenience: Proposed due to possibility of offering substantial advantage to the Project.
      a. Substitution requests offering advantages solely to the Contractor will not be considered.

1.4 REFERENCE STANDARDS

A. CSI/CSC Form 1.5C - Substitution Request (During the Bidding/Negotiating Stage); Current Edition.
B. CSI/CSC Form 13.1A - Substitution Request (After the Bidding/Negotiating Phase); Current Edition.

PART 2 PRODUCTS - NOT USED

PART 3 EXECUTION

3.1 GENERAL REQUIREMENTS

A. A Substitution Request for products, assemblies, materials, and equipment constitutes a representation that the submitter:

1. Has investigated proposed product and determined that it meets or exceeds the quality level of the specified product, equipment, assembly, or system.
2. Agrees to provide the same warranty for the substitution as for the specified product.
3. Agrees to coordinate installation and make changes to other work that may be required for the work to be complete, with no additional cost to Owner.
4. Waives claims for additional costs or time extension that may subsequently become apparent.
5. Agrees to reimburse Owner and Architect for review or redesign services associated with re-approval by authorities.

B. Document each request with complete data substantiating compliance of proposed substitution with Contract Documents. Burden of proof is on proposer.
1. Substitution Request Form: Use form provided at the end of this Section.
2. Note explicitly any non-compliant characteristics.

C. Content: Include information necessary for tracking the status of each Substitution Request, and information necessary to provide an actionable response.
1. Forms included in the Project Manual are adequate for this purpose, and must be used.
2. Attached Comparative Data: Provide point-by-point, side-by-side comparison addressing essential attributes specified, as appropriate and relevant for the item:
a. Physical characteristics - size, weight, texture, etc.
b. In-service performance.
c. Expected durability.
d. Visual effect.
e. Sustainable design features.
f. Research reports evidencing compliance with building code in effect for Project, from ICC-ES.
g. Warranties.
h. Other salient features and requirements.
i. Include, as appropriate or requested, the following types of documentation:
1) Product Data:
2) Samples.
3) Certificates, test, reports or similar qualification data.
4) Drawings, when required to show impact on adjacent construction elements.
3. Impact of Substitution:
a. Savings to Owner for accepting substitution.
b. Change to Contract Time due to accepting substitution.

D. Limit each request to a single proposed substitution item.
1. Submit an electronic document, combining the request form with supporting data into single document.

3.2 SUBSTITUTION PROCEDURES DURING PROCUREMENT

A. Submittal Time Restrictions:
1. Owner will consider requests for substitutions only if submitted at least 10 calendar days prior to the date for receipt of bids.

B. Submittal Form (before award of contract):
1. Submit substitution requests by completing CSI/CSC Form 1.5C - Substitution Request. See this form for additional information and instructions. Use only this form; other forms of submission are unacceptable.

3.3 QUALITY ASSURANCE

A. Compatibility of Substitutions: Investigate and document compatibility of proposed substitution with related products and materials. Engage a qualified testing agency to perform compatibility tests recommended by manufacturers.

3.4 PROCEDURES

A. Coordination: Revise or adjust affected work as necessary to integrate work of the approved substitutions.

3.5 SUBSTITUTION PROCEDURES DURING CONSTRUCTION

A. Submittal Form (after award of contract):
   1. Submit substitution requests by completing CSI/CSC Form 13.1A - Substitution Request (After Bidding/Negotiating). See this form for additional information and instructions. Use only this form; other forms of submission are unacceptable.
B. Architect will consider requests for substitutions only within 30 days after date of Agreement.
C. Submit request for Substitution for Cause immedately upon discovery of need for substitution, but not later than 14 calendar days prior to time required for review and approval by Architect, in order to stay on approved project schedule.
D. Submit request for Substitution for Convenience immediately upon discovery of its potential advantage to the project, but not later than 14 calendar days prior to time required for review and approval by Architect, in order to stay on approved project schedule.
   1. In addition to meeting general documentation requirements, document how the requested substitution benefits the Owner through cost savings, time savings, greater energy conservation, or in other specific ways.
   2. Document means of coordinating of substitution item with other portions of the work, including work by affected subcontractors.
   3. Bear the costs engendered by proposed substitution of:
      a. Owner's compensation to the Architect for any required redesign, time spent processing and evaluating the request.
E. Substitutions will not be considered under one or more of the following circumstances:
   1. When they are indicated or implied on shop drawing or product data submittals, without having received prior approval.
   2. Without a separate written request.

3.6 RESOLUTION

A. Architect may request additional information and documentation prior to rendering a decision. Provide this data in an expeditious manner.
B. Architect will notify Contractor in writing of decision to accept or reject request.

3.7 ACCEPTANCE

A. Accepted substitutions change the Work of the Project. They will be documented and incorporated into work of the project by Change Order, Construction Change Directive, Architectural Supplementary Instructions, or similar instruments provided for in the Conditions of the Contract.
B. Revisions to Contract Documents: Unless the provisions of the Owner/Contractor Agreement and/or Owner/Architect Agreement provide otherwise, if Contractor's proposed substitution require revisions to the Contract Documents, the Owner shall be entitled to reimbursement from the ContractorContractor for amounts paid to the Architect for reviewing the Contractor’s proposed substitution and making agreed-upon changes in the Drawings and Specifications resulting from such substitutions.

3.8 ATTACHMENTS

A. A facsimile of the Substitution Request Form required to be used on the Project is included after this section.

END OF SECTION

SUBSTITUTION REQUEST
(During the Bidding/Negotiating Phase)

CSI®

PROJECT: _____

SUBSTITUTION REQUEST NUMBER: _____

FROM: _____

TO: _____

DATE: _____

A/E PROJECT NUMBER: _____

RE: _____

CONTRACT FOR: _____

SPECIFICATION TITLE: _____

DESCRIPTION: _____

SECTION: _____ **PAGE:** _____

ARTICLE/PARAGRAPH: _____

PROPOSED SUBSTITUTION: _____

MANUFACTURER: _____ **ADDRESS:** _____ **PHONE:** _____

TRADE NAME: _____ **MODEL NO.:** _____

Attached data includes product description, specifications, drawings, photographs, and performance and test data adequate for evaluation of the request; applicable portions of the data are clearly identified.
Attached data also includes a description of changes to the Contract Documents that the proposed substitution will require for its proper installation.

The Undersigned certifies:

- Proposed substitution has been fully investigated and determined to be equal or superior in all respects to specified product.
- Same warranty will be furnished for proposed substitution as for specified product.
- Same maintenance service and source of replacement parts, as applicable, is available.
- Proposed substitution will have no adverse effect on other trades and will not affect or delay progress schedule.
- Proposed substitution does not affect dimensions and functional clearances.
- Payment will be made for changes to building design, including A/E design, detailing, and construction costs caused by the substitution.

SUBMITTED BY: _____

SIGNED BY: _____

FIRM: _____

ADDRESS: _____

TELEPHONE: _____

A/E's REVIEW AND RECOMMENDATION:

☐ Approve Substitution—Make submittals in accordance with Specification Section 01 33 00 Submittal Procedures.

☐ Approve Substitution as noted—Make submittals in accordance with Specification Section 01 33 00 Submittal Procedures.

☐ Reject Substitution—Use specified materials.

☐ Substitution Request received too late—Use specified materials.

SIGNED BY: **DATE:**

SUPPORTING DATA ATTACHED: ☐ **Drawings** ☐ **Product Data** ☐ **Samples** ☐ **Tests** ☐ **Reports** ☐ _____

© 2020 The Construction Specifications Institute (CSI)

SUBSTITUTION REQUEST
(After the Bidding/Negotiating Phase)

CSI®

PROJECT: _____

_____

TO: _____

_____

RE: _____

SUBSTITUTION REQUEST NUMBER: _____

FROM: _____

DATE: _____

A/E PROJECT NUMBER: _____

CONTRACT FOR: _____

SPECIFICATION TITLE: _____ DESCRIPTION: _____

SECTION: _____ PAGE: _____ ARTICLE/PARAGRAPH: _____

PROPOSED SUBSTITUTION: _____

MANUFACTURER: _____ ADDRESS: _____ PHONE: _____

TRADE NAME: _____ MODEL NO.: _____

INTALLER: _____ ADDRESS: _____ PHONE: _____

HISTORY: ☐ New Product ☐ 1-4 years old ☐ 5-10 years old ☐ More than 10 years old

DIFFERENCES BETWEEN PROPOSED SUBSTITUTION AND SPECIFIED PRODUCT: _____

_____

_____

☐ Point-by-point comparative data attached — REQUIRED BY A/E

REASON FOR NOT PROVIDING SPECIFIED ITEM: _____

_____

SIMILAR INSTALLATION:

PROJECT: _____ ARCHITECT: _____

ADDRESS: _____ OWNER: _____

_____ DATE INSTALLED: _____

PROPOSED SUBSTITUTION AFFECTS OTHER PARTS OF WORK: ☐ No ☐ Yes; explain _____

_____

SAVINGS TO OWNER FOR ACCEPTING SUBSTITUTION:

PROPOSED SUBSTITUTION CHANGES CONTRACT TIME: ☐ No ☐ Yes [Add] [Deduct] _____ days.

SUPPORTING DATA ATTACHED: ☐ Drawings ☐ Product Data ☐ Samples ☐ Tests ☐ Reports ☐ _____

CONTINUE ON NEXT PAGE

© 2022 The Construction Specifications Institute (CSI)

SUBSTITUTION REQUEST
(After the Bidding/Negotiating Phase—Continued)

The Undersigned certifies:

- Proposed substitution has been fully investigated and determined to be equal or superior in all respects to specified product.
- Same warranty will be furnished for proposed substitution as for specified product.
- Same maintenance service and source of replacement parts, as applicable, is available.
- Proposed substitution will have no adverse effect on other trades and will not affect or delay progress schedule.
- Cost data as stated above is complete. Claims for additional costs related to accepted substitution which may subsequently become apparent are to be waived.
- Proposed substitution does not affect dimensions and functional clearances.
- Payment will be made for changes to building design, including A/E design, detailing, and construction costs caused by the substitution.
- Coordination, installation, and changes in the Work as necessary for accepted substitution will be complete in all respects.

SUBMITTED BY: _____

SIGNED BY: _____

FIRM: _____

ADDRESS: _____

TELEPHONE: _____

☐ **Attachments**

A/E's REVIEW AND RECOMMENDATION:

☐ Approve Substitution—Make submittals in accordance with Specification Section 01 33 00 Submittal Procedures.

☐ Approve Substitution as noted—Make submittals in accordance with Specification Section 01 33 00 Submittal Procedures.

☐ Reject Substitution—Use specified materials.

☐ Substitution Request received too late—Use specified materials.

SIGNED BY: **DATE:**

OWNER'S REVIEW AND ACTION:

☐ Substitution approved—Make submittals in accordance with Specification Section 01 33 00 Submittal Procedures. Prepare Change Order

☐ Substitution approved as noted—Make submittals in accordance with Specification Section 01 33 00 Submittal Procedures. Prepare Change Order.

☐ Substitution rejected—Use specified materials.

SIGNED BY: **DATE:**

ADDITIONAL COMMENTS: ☐ **Contractor** ☐ **Subcontractor** ☐ **Supplier** ☐ **Manufacturer** ☐ **A/E**

CSI Form 13.1A (April 2022 version)

© 2022 The Construction Specifications Institute (CSI)

SECTION 013000 - ADMINISTRATIVE REQUIREMENTS

PART 1 GENERAL

1.1 SECTION INCLUDES

A. General administrative requirements.
B. Electronic document submittal service.
C. Preconstruction meeting.
D. Site mobilization meeting.
E. Progress meetings.
F. Construction progress schedule.
G. Preinstallation meetings.
H. Progress photographs.
I. Coordination drawings.
J. Submittals for review, information, and project closeout.
K. Requests for Information (RFI) procedures.
L. Submittal procedures.

1.2 RELATED REQUIREMENTS

A. Section 013216 - Construction Progress Schedule: Form, content, and administration of schedules.
B. Section 016000 - Product Requirements: General product requirements.
C. Section 017000 - Execution and Closeout Requirements: Additional coordination requirements.
D. Section 017800 - Closeout Submittals: Project record documents; operation and maintenance data; warranties and bonds.

1.3 GENERAL ADMINISTRATIVE REQUIREMENTS

A. Comply with requirements of Section 017000 - Execution and Closeout Requirements for coordination of execution of administrative tasks with timing of construction activities.
B. Make the following types of submittals to Architect:
   1. Requests for Information (RFI).
   2. Requests for substitution.
   3. Shop drawings, product data, and samples.
   4. Test and inspection reports.
   5. Design data.
   6. Manufacturer's instructions and field reports.
   7. Applications for payment and change order requests.
   8. Progress schedules.
   9. Coordination drawings.
   10. Correction Punch List and Final Correction Punch List for Substantial Completion.
   11. Closeout submittals.

1.4 PROJECT INFORMATIONAL SUBMITTALS

A. Subcontract List: Prepare a written summary identifying individuals or firms proposed for each portion of the work, including those who are to furnish products or equipment fabricated to a special design. Include the following information in tabular form:
   1. Name, address, telephone number, and email address of entity performing subcontract or supplying products.
   2. Number and title of related specification section(s) covered by subcontract.
   3. Drawing number and detail references, as appropriate, covered by subcontract.
B. Key Personnel Names: Within 15 business days of starting construction operations, submit a list of key personnel assignments, including superintendent and other personnel in attendance at project site. Identify

individuals and their duties and responsibilities; list addresses, cellular telephone numbers, and e-mail addresses. Provide names, addresses, and telephone numbers of individuals assigned as alternates in the absence of individuals assigned to project.

1. Post copies of list in project meeting room, in temporary field office, in web-based project software directory, and in prominent location. Keep list current at all times.

PART 2 PRODUCTS - NOT USED

PART 3 EXECUTION

3.1 ELECTRONIC DOCUMENT SUBMITTAL SERVICE

A. All documents transmitted for purposes of administration of the contract are to be in electronic (PDF) format, as appropriate to the document, and transmitted via an Internet-based submittal service that receives, logs and stores documents, provides electronic stamping and signatures, and notifies addressees via email.
   1. Besides submittals for review, information, and closeout, this procedure applies to Requests for Information (RFIs), progress documentation, contract modification documents (e.g. supplementary instructions, change proposals, change orders), applications for payment, field reports and meeting minutes, Contractor's correction punchlist, and any other document any participant wishes to make part of the project record.
   2. Contractor and Architect are required to use this service.
   3. It is Contractor's responsibility to submit documents in allowable format.
   4. Subcontractors, suppliers, and Architect's consultants will be permitted to use the service at no extra charge.
   5. Users of the service need an email address, internet access, and PDF review software that includes ability to mark up and apply electronic stamps (such as Adobe Acrobat, www.adobe.com, or Bluebeam PDF Revu, www.bluebeam.com), unless such software capability is provided by the service provider.
   6. Paper document transmittals will not be reviewed; emailed electronic documents will not be reviewed.
   7. All other specified submittal and document transmission procedures apply, except that electronic document requirements do not apply to samples or color selection charts.
B. Training: One, one-hour, web-based training session will be arranged for all participants, with representatives of Architect and Contractor participating; further training is the responsibility of the user of the service.
C. Project Closeout: Architect will determine when to terminate the service for the project and is responsible for obtaining archive copies of files for Owner.

3.2 PRECONSTRUCTION MEETING

A. Schedule meeting after Notice of Award.
B. Attendance Required:
   1. Owner.
   2. Architect.
   3. Contractor.
C. Agenda:
   1. Execution of Owner-Contractor Agreement.
   2. Submission of executed bonds and insurance certificates.
   3. Distribution of Contract Documents.
   4. Submission of list of subcontractors, list of products, schedule of values, and progress schedule.
   5. Designation of personnel representing the parties to Contract, Architect, and consultants.
   6. Procedures and processing of field decisions, submittals, substitutions, applications for payments, proposal request, Change Orders, and Contract closeout procedures.
   7. Scheduling.

D. Record minutes and distribute copies within two days after meeting to participants, with one PDF copy to Architect, Owner, participants, and those affected by decisions made.

3.3 SITE MOBILIZATION MEETING

A. Schedule meeting at the Project site prior to Contractor occupancy.
B. Attendance Required:
   1. Contractor.
   2. Owner.
   3. Architect.
   4. Contractor's superintendent.
   5. Major subcontractors.
C. Agenda:
   1. Use of premises by Owner and Contractor.
   2. Owner's requirements and occupancy prior to completion.
   3. Construction facilities and controls provided by Owner.
   4. Temporary utilities provided by Owner.
   5. Survey and building layout.
   6. Security and housekeeping procedures.
   7. Schedules.
   8. Application for payment procedures.
   9. Procedures for testing.
   10. Procedures for maintaining record documents.
   11. Requirements for start-up of equipment.
   12. Inspection and acceptance of equipment put into service during construction period.
D. Record minutes and distribute copies within two days after meeting to participants, with one copy to Architect, Owner, participants, and those affected by decisions made.

3.4 PROGRESS MEETINGS

A. Schedule and administer meetings throughout progress of the work at maximum bi-monthly intervals.
B. Make arrangements for meetings, prepare agenda with copies for participants, preside at meetings.
C. Attendance Required:
   1. Contractor.
   2. Owner.
   3. Architect.
   4. Contractor's superintendent.
   5. Major subcontractors.
D. Agenda:
   1. Review minutes of previous meetings.
   2. Review of work progress.
   3. Field observations, problems, and decisions.
   4. Identification of problems that impede, or will impede, planned progress.
   5. Review of submittals schedule and status of submittals.
   6. Review of RFIs log and status of responses.
   7. Review of off-site fabrication and delivery schedules.
   8. Maintenance of progress schedule.
   9. Corrective measures to regain projected schedules.
   10. Planned progress during succeeding work period.
   11. Coordination of projected progress.
   12. Maintenance of quality and work standards.
   13. Effect of proposed changes on progress schedule and coordination.
   14. Other business relating to work.

E. Record minutes and distribute copies within two days after meeting to participants, with one copy to Architect, Owner, participants, and those affected by decisions made.

3.5 PREINSTALLATION MEETINGS

A. Conduct a preinstallation conference at project site before each construction activity when required by other sections and when required for coordination with other construction.
B. Attendees: Installer and representatives of manufacturers and fabricators involved in or affected by the installation and its coordination or integration with other materials and installations that have preceded or will follow, shall attend the meeting. Advise Architect and Owner's commissioning authority of scheduled meeting dates.
C. Agenda: Review progress of other construction activities and preparations for the particular activity under consideration.
D. Record significant conference discussions, agreements, and disagreements, including required corrective measures and actions.
E. Reporting: Distribute minutes of the meeting to each party present and to other parties requiring information.
F. Do not proceed with installation if the conference cannot be successfully concluded. Initiate whatever actions are necessary to resolve impediments to performance of the Work and reconvene the conference at earliest feasible date.

3.6 CONSTRUCTION PROGRESS SCHEDULE

A. If preliminary schedule requires revision after review, submit revised schedule within 10 days.
B. Within 20 days after review of preliminary schedule, submit draft of proposed complete schedule for review.
    1. Include written certification that major contractors have reviewed and accepted proposed schedule.
C. Within 10 days after joint review, submit complete schedule.
D. Submit updated schedule with each Application for Payment.

3.7 CONSTRUCTION PROGRESS MEETINGS

A. Conduct progress meetings at regular weekly intervals, and more frequently when appropriate to the stage of construction.
B. Coordinate dates of meetings with preparation of payment requests.
C. Attendees: In addition to representatives of Owner, Owner's commissioning authority and Architect, each contractor, subcontractor, supplier, and other entity concerned with current progress or involved in planning, coordination, or performance of future activities shall be represented at these meetings. All participants at the meeting shall be familiar with Project and authorized to conclude matters relating to the Work.
D. Agenda: Review and correct or approve minutes of previous progress meeting. Review other items of significance that could affect progress. Include topics for discussion as appropriate to status of Project.
    1. Contractor's Construction Schedule: Review progress since the last meeting. Determine whether each activity is on time, ahead of schedule, or behind schedule, in relation to Contractor's construction schedule. Determine how construction behind schedule will be expedited; secure commitments from parties involved to do so. Discuss whether schedule revisions are required to ensure that current and subsequent activities will be completed within the Contract time.
        a. Review schedule for next period.
    2. Review present and future needs of each entity present.
E. Minutes: Contractor will record and distribute the meeting minutes to each party present and to parties requiring information.
    1. Schedule Updating: Revise Contractor's construction schedule after each progress meeting, where revisions to the schedule have been made or recognized. Issue revised schedule concurrently with the report of each meeting.

3.8 COORDINATION MEETINGS

A. Conduct Project coordination meetings at intervals appropriate to the stage of construction. Project coordination meetings are in addition to specific meetings held for other purposes, such as progress meetings and preinstallation conferences.

B. Attendees: In addition to representatives of Owner, Owner's Commissioning Authority**,** and Architect, each contractor, subcontractor, supplier, and other entity concerned with current progress or involved in planning, coordination, or performance of future activities shall be represented at these meetings. All participants at the meetings shall be familiar with project and authorized to conclude matters relating to the Work.

C. Agenda: Review and correct or approve minutes of the previous coordination meeting. Review other items of significance that could affect progress. Include topics for discussion as appropriate to status of project.

1. Combined Contractor's Construction Schedule: Review progress since the last coordination meeting. Determine whether each contract is on time, ahead of schedule, or behind schedule, in relation to combined Contractor's construction schedule. Determine how construction behind schedule will be expedited; secure commitments from parties involved to do so. Discuss whether schedule revisions are required to ensure that current and subsequent activities will be completed within the contract time.
2. Schedule Updating: Revise combined Contractor's construction schedule after each coordination meeting, where revisions to the schedule have been made or recognized. Issue revised schedule concurrently with report of each meeting.
3. Review present and future needs of each Contractor present.

D. Reporting: Contractor shall record meeting results and distribute copies to everyone in attendance and to others affected by decisions or actions resulting from each meeting.

3.9 PROJECT CLOSEOUT CONFERENCE

A. Schedule and conduct a project closeout conference, at a time convenient to Owner and Architect, but no later than 90 days prior to the scheduled date of Substantial Completion.

B. Attendees: Authorized representatives of Owner, Owner's Commissioning Authority, Architect, and their consultants; Contractor and its superintendent; major subcontractors; suppliers; and other concerned parties shall attend the meeting. Participants at the meeting shall be familiar with the Project and authorized to conclude matters relating to the Work.

C. Agenda: Discuss items of significance that could affect or delay project closeout, including the following:

1. Preparation of record documents.
2. Procedures required prior to inspection for Substantial Completion and for final inspection for acceptance.
3. Procedures for completing and archiving web-based project software site data files.
4. Submittal of written warranties.
5. Requirements for completing sustainable design documentation.
6. Requirements for preparing operations and maintenance data.
7. Requirements for delivery of material samples, attic stock, and spare parts.
8. Requirements for demonstration and training.
9. Preparation of Contractor's punch list.
10. Procedures for processing applications for payment at Substantial Completion and for final payment.
11. Submittal procedures.
12. Coordination of separate contracts.
13. Owner's partial occupancy requirements.
14. Installation of Owner's furniture, fixtures, and equipment.
15. Responsibility for removing temporary facilities and controls.

D. Minutes: Contractor will record and distribute meeting minutes.

3.10 PROGRESS PHOTOGRAPHS

A. Submit photographs with each application for payment, taken not more than 3 days prior to submission of application for payment.

B. Photography Type: Digital; electronic files.

C. Provide photographs of site and construction throughout progress of work produced by an experienced photographer, acceptable to Architect.

D. Digital Photographs: 24 bit color, minimum resolution of 1024 by 768, in JPG format; provide files unaltered by photo editing software.

1. Delivery Medium: Web-based Project management software site.
2. File Naming: Include project identification, date and time of view, and view identification.

3.11 COORDINATION DOCUMENTS

A. General Requirements: Prepare coordination drawings according to requirements in individual sections, and additionally where installation is not completely indicated on shop drawings, where limited space availability necessitates coordination, or if coordination is required to facilitate integration of products and materials fabricated or installed by more than one entity.

B. Verify utility requirements and characteristics of operating equipment are compatible with building utilities. Coordinate work of various sections having interdependent responsibilities for installing, connecting to, and placing in service, operating equipment.

C. Coordinate space requirements, supports, and installation of fire protection, plumbing, mechanical, and electrical work indicated diagrammatically on drawings. Follow routing shown for pipes, ducts, and conduit, as closely as practicable; place runs parallel with lines of building. Utilize spaces efficiently to maximize accessibility for other installations, for maintenance, and for repairs.

D. In finished areas, conceal pipes, ducts, and wiring within construction. Coordinate locations of fixtures and outlets with finish elements.

E. Coordination Drawing Organization: Organize coordination drawings as follows:

1. Floor Plans and Reflected Ceiling Plans: Show architectural and structural elements, and mechanical, plumbing, fire-protection, fire-alarm, and electrical work. Show locations of visible ceiling-mounted devices relative to acoustical ceiling grid. Supplement plan drawings with section drawings where required to adequately represent the Work.
2. Plenum Space: Indicate subframing for support of ceiling and wall systems, mechanical and electrical equipment, and related work. Locate components within plenums to accommodate layout of light fixtures and other components indicated on drawings. Indicate areas of conflict between light fixtures and other components.
3. Mechanical Rooms: Provide coordination drawings for mechanical rooms, showing plans and elevations of mechanical, plumbing, fire-protection, fire-alarm, and electrical equipment.
4. Structural Penetrations: Indicate penetrations and openings required for all disciplines.
5. Slab Edge and Embedded Items: Indicate slab edge locations and sizes and locations of embedded items for metal fabrications, sleeves, anchor bolts, bearing plates, angles, door floor closers, slab depressions for floor finishes, curbs and housekeeping pads, and similar items.
6. Mechanical and Plumbing Work: Show the following:
   a. Sizes and bottom elevations of ductwork, piping, and conduit runs, including insulation, bracing, flanges, and support systems.
   b. Dimensions of major components, such as dampers, valves, diffusers, access doors, cleanouts and electrical distribution equipment.
   c. Fire-rated enclosures around ductwork.
7. Electrical Work: Show the following:
   a. Runs of vertical and horizontal conduit 1 1/4-inch in diameter and larger.
   b. Light fixture, exit light, emergency battery pack, smoke detector, and other fire-alarm locations.
   c. Panel board, switchboard, switchgear, transformer, busway, generator, and motor-control center locations.
   d. Location of pull boxes and junction boxes, dimensioned from column center lines.
8. Fire-Protection System: Show the following:
   a. Locations of standpipes, mains piping, branch lines, pipe drops, and sprinkler heads.
9. Review: Architect will review coordination drawings to confirm that, in general, the Work is being coordinated, but not for the details of the coordination, which are Contractor's responsibility. If Architect determines that coordination drawings are not being prepared in sufficient scope or detail, or are otherwise deficient, Architect will so inform Contractor, who shall make suitable modifications and resubmit.

3.12 REQUESTS FOR INFORMATION (RFI)

A. Definition: A request seeking one of the following:
   1. An interpretation, amplification, or clarification of some requirement of Contract Documents arising from inability to determine from them the exact material, process, or system to be installed; or when the elements of construction are required to occupy the same space; or when an item of work is described differently at more than one place in Contract Documents.

B. Whenever possible, request clarifications at the next appropriate project progress meeting, with response entered into meeting minutes, rendering unnecessary the issuance of a formal RFI.

C. Preparation: Prepare an RFI immediately upon discovery of a need for interpretation of Contract Documents. Failure to submit a RFI in a timely manner is not a legitimate cause for claiming additional costs or delays in execution of the Work.
   1. Prepare a separate RFI for each specific item.
      a. Review, coordinate, and comment on requests originating with subcontractors and/or materials suppliers.
      b. Do not forward requests which solely require internal coordination between subcontractors.
   2. Prepare in a format and with content acceptable to Owner.
   3. Prepare using software provided by the Electronic Document Submittal Service.
   4. Combine RFI and its attachments into a single electronic file. PDF format is preferred.

D. Reason for the RFI: Prior to initiation of an RFI, carefully study all Contract Documents to confirm that information sufficient for their interpretation is definitely not included.
   1. Unacceptable Uses for RFIs: Do not use RFIs to request the following::
      a. Approval of submittals (use procedures specified elsewhere in this section).
      b. Approval of substitutions (see Section - 016000 - Product Requirements)
      c. Changes that entail change in Contract Time and Contract Sum (comply with provisions of the Conditions of the Contract).
      d. Different methods of performing work than those indicated in the Contract Drawings and Specifications (comply with provisions of the Conditions of the Contract).
   2. Improper RFIs: Requests not prepared in compliance with requirements of this section, and/or missing key information required to render an actionable response. They will be returned without a response, with an explanatory notation.
   3. Frivolous RFIs: Requests regarding information that is clearly indicated on, or reasonably inferable from, Contract Documents, with no additional input required to clarify the question. They will be returned without a response, with an explanatory notation.
      a. The Owner reserves the right to assess the Contractor for the costs (on time-and-materials basis) incurred by the Architect, and any of its consultants, due to processing of such RFIs.

E. Content: Include identifiers necessary for tracking the status of each RFI, and information necessary to provide an actionable response.
   1. Official Project name and number, and any additional required identifiers established in Contract Documents.
   2. Owner's, Architect's, and Contractor's names.
   3. Discrete and consecutive RFI number, and descriptive subject/title.
   4. Issue date, and requested reply date.
   5. Reference to particular Contract Document(s) requiring additional information/interpretation. Identify pertinent drawing and detail number and/or specification section number, title, and paragraph(s).
   6. Annotations: Field dimensions and/or description of conditions which have engendered the request.
   7. Contractor's suggested resolution: A written and/or a graphic solution, to scale, is required in cases where clarification of coordination issues is involved, for example; routing, clearances, and/or specific locations of work shown diagrammatically in Contract Documents. If applicable, state the likely impact of the suggested resolution on Contract Time or the Contract Sum.

F. Attachments: Include sketches, coordination drawings, descriptions, photos, submittals, and other information necessary to substantiate the reason for the request.

G. RFI Log: Prepare and maintain a tabular log of RFIs for the duration of the project.
   1. Indicate current status of every RFI. Update log promptly and on a regular basis.

2. Note dates of when each request is made, and when a response is received.
3. Highlight items requiring priority or expedited response.
4. Highlight items for which a timely response has not been received to date.

H. Review Time: Architect will respond and return RFIs to Contractor within 5 business days of receipt. For the purpose of establishing the start of the mandated response period, RFIs received after 1:00 p.m. PST will be considered as having been received on the following regular working day.
1. Response period may be shortened or lengthened for specific items, subject to mutual agreement, and recorded in a timely manner in progress meeting minutes.

I. Responses: Content of answered RFIs will not constitute in any manner a directive or authorization to perform extra work or delay the project. If in Contractor's belief it is likely to lead to a change to Contract Sum or Contract Time, promptly issue a notice to this effect, and follow up with an appropriate Change Order request to Owner.
1. Response may include a request for additional information, in which case the original RFI will be deemed as having been answered, and an amended one is to be issued forthwith. Identify the amended RFI with an R suffix to the original number.
2. Upon receipt of a response, promptly review and distribute it to all affected parties, and update the RFI Log.
3. Architect's action on RFIs that may result in a change to the Contract Time or the Contract Sum may be eligible for Contractor to submit Change Proposal according to Section 012000 - Price and Payment Procedures.
a. If Contractor believes the RFI response warrants change in the Contract Time or the Contract Sum, notify Architect in writing within 5 business days of receipt of the RFI response.

3.13 SUBMITTAL SCHEDULE

A. Submit to Architect for review a schedule for submittals in tabular format.
1. Submit at the same time as the preliminary schedule specified in Section - 013216 - Construction Progress Schedule.
2. Coordinate with Contractor's construction schedule and schedule of values.
3. Format schedule to allow tracking of status of submittals throughout duration of construction.
4. Arrange information to include scheduled date for initial submittal, specification number and title, submittal category (for review or for information), description of item of work covered, and role and name of subcontractor.
5. Account for time required for preparation, review, manufacturing, fabrication and delivery when establishing submittal delivery and review deadline dates.
a. For assemblies, equipment, systems comprised of multiple components and/or requiring detailed coordination with other work, allow for additional time to make corrections or revisions to initial submittals, and time for their review.

3.14 SUBMITTALS FOR REVIEW

A. When the following are specified in individual sections, submit them for review:
1. Product data.
2. Shop drawings.
3. Samples for selection.
4. Samples for verification.

B. Submit to Architect for review for the limited purpose of checking for compliance with information given and the design concept expressed in Contract Documents.

C. Samples will be reviewed for aesthetic, color, or finish selection.

D. After review, provide copies and distribute in accordance with SUBMITTAL PROCEDURES article below and for record documents purposes described in Section 017800 - Closeout Submittals.

3.15 SUBMITTALS FOR INFORMATION

A. When the following are specified in individual sections, submit them for information:
1. Design data.
2. Sustainability design submittals and reports.

3. Certificates.
4. Test reports.
5. Inspection reports.
6. Manufacturer's instructions.
7. Manufacturer's field reports.
8. Other types indicated.

B. Submit for Architect's knowledge as contract administrator or for Owner.

3.16 SUBMITTALS FOR PROJECT CLOSEOUT

A. Submit Correction Punch List for Substantial Completion.
B. Submit Final Correction Punch List for Substantial Completion.
C. When the following are specified in individual sections, submit them at project closeout in compliance with requirements of Section 017800 - Closeout Submittals:
1. Project record documents.
2. Operation and maintenance data.
3. Warranties.
4. Bonds.
5. Other types as indicated.
D. Submit for Owner's benefit during and after project completion.

3.17 NUMBER OF COPIES OF SUBMITTALS

A. Electronic Documents: Submit one electronic copy in PDF format; an electronically-marked up file will be returned. Create PDFs at native size and right-side up; illegible files will be rejected.
B. Samples: Submit the number specified in individual specification sections; one of which will be retained by Architect.
1. After review, produce duplicates.
2. Retained samples will not be returned to Contractor unless specifically so stated.
3. Submit no less than 2 sets of samples

3.18 SUBMITTAL PROCEDURES

A. General Requirements:
1. Use a separate transmittal for each item.
2. Submit separate packages of submittals for review and submittals for information, when included in the same specification section.
3. Transmit using approved form.
a. Use form generated by Electronic Document Submittal Service software.
4. Sequentially identify each item. For revised submittals use original number and a sequential numerical suffix.
5. Identify: Project; Contractor; subcontractor or supplier; pertinent drawing and detail number; and specification section number and article/paragraph, as appropriate on each copy.
6. Apply Contractor's stamp, signed or initialed certifying that review, approval, verification of products required, field dimensions, adjacent construction work, and coordination of information is in accordance with the requirements of the work and Contract Documents.
a. Submittals from sources other than the Contractor, or without Contractor's stamp will not be acknowledged, reviewed, or returned.
7. Deliver each submittal on date noted in submittal schedule, unless an earlier date has been agreed to by all affected parties, and is of the benefit to the project.
a. Send submittals in electronic format via email to Architect.
b. Upload submittals in electronic form to Electronic Document Submittal Service website.
8. Schedule submittals to expedite the Project, and coordinate submission of related items.
a. For each submittal for review, allow 10 business days excluding delivery time to and from the Contractor.

b. For sequential reviews involving Architect's consultants, Owner, or another affected party, allow an additional 5 days.

c. Concurrent Consultant Review: Where the Contract Documents indicate that submittals may be transmitted simultaneously to Architect and to Architect's consultants, allow 15 business days for review of each submittal. Submittal will be returned to Architect before being returned to Contractor

1) With Architect's approval, send electronic copy of submittal simultaneously to both concurrent reviewer and Architect.

d. Deferred Approval Review: Allow review time as required by Authorities Having Jurisdiction.

e. Review Without Approved Contractor's Submittal Schedule: In the absence of an approved Contractor submittal schedule, in no case will the Architect's review period on any submittal be less than 10 business days after receipt of the submittal from the Contractor.

9. Identify variations from Contract Documents and product or system limitations that may be detrimental to successful performance of the completed work.

10. Provide space for Contractor and Architect review stamps.

11. When revised for resubmission, identify all changes made since previous submission.

12. Distribute reviewed submittals. Instruct parties to promptly report inability to comply with requirements.

13. Incomplete submittals will not be reviewed, unless they are partial submittals for distinct portion(s) of the work, and have received prior approval for their use.

14. Submittals not requested will not be recognized or processed.

B. Product Data Procedures:

1. Submit only information required by individual specification sections.

2. Collect required information into a single submittal.

3. Do not submit (Material) Safety Data Sheets for materials or products.

C. Shop Drawing Procedures:

1. Prepare accurate, drawn-to-scale, original shop drawing documentation by interpreting Contract Documents and coordinating related work.

2. Generic, non-project-specific information submitted as shop drawings do not meet the requirements for shop drawings.

D. Samples Procedures:

1. Transmit related items together as single package.

2. Identify each item to allow review for applicability in relation to shop drawings showing installation locations.

3. Include with transmittal high-resolution image files of samples to facilitate electronic review and approval. Provide separate submittal page for each item image.

3.19 SUBMITTAL REVIEW

A. Submittals for Review: Architect will review each submittal, and approve, or take other appropriate action.

B. Submittals for Information: Architect will acknowledge receipt and review. See below for actions to be taken.

C. Architect's actions will be reflected by marking each returned submittal using virtual stamp on electronic submittals.

D. Architect's and consultants' actions on items submitted for review:

1. Authorizing purchasing, fabrication, delivery, and installation:

a. "No Exceptions Taken", or language with same legal meaning.

b. "Note Markings", or language with same legal meaning.

1) At Contractor's option, submit corrected item, with review notations acknowledged and incorporated.

2. Not Authorizing fabrication, delivery, and installation:

E. Architect's and consultants' actions on items submitted for information:

1. Items for which no action was taken:

a. "Received for Record" - to notify the Contractor that the submittal has been received for record only.

3.20 DEVIATIONS

A. Deviations: The Work shall be in accordance with the approved submittals except that the Contractor shall not be relieved of responsibility for deviations from requirements of the Contract Documents by the Architect's review of shop drawings, product data, samples, or other similar submittals unless the Contractor has specifically informed the Architect in writing of such deviation at the time of the submittal and
   1. The Architect has given written approval to the specific deviation as a minor change in the Work, or
   2. A Change Order has been issued authorizing the deviation.
B. The Contractor shall not be relieved of responsibility for errors or omissions in shop drawings, product data, samples or similar submittals by the Architect's review thereof.

3.21 REPORTS

A. Site Condition Reports: Immediately on discovery of a difference between site conditions and the Contract Documents, prepare and submit a detailed report. Submit with a request for Information. Include a detailed description of the differing conditions, together with recommendations for changing the Contract Documents.
B. Unusual Event Reports: When an event of an unusual and significant nature occurs at project site, whether or not related directly to the Work, prepare and submit a special report. List chain of events, persons participating, responses by Contractor's personnel, evaluation of results or effects, and similar pertinent information. Advise Owner in advance when these events are known or predictable.
   1. Submit unusual event reports directly to Owner within one day of an occurrence. Distribute copies of report to parties affected by the occurrence.

END OF SECTION

SECTION 013216 - CONSTRUCTION PROGRESS SCHEDULE

PART 1 GENERAL

1.1 SECTION INCLUDES

A. Preliminary schedule.
B. Construction progress schedule, Critical Path Method (CPM)

1.2 RELATED SECTIONS

A. Section 012000 - Price and Payment Procedures for schedule of values and requirements for use of cost-loaded schedule for Applications for Payment.
B. Section 014000 - Quality Requirements for schedule of test and inspections

1.3 REFERENCE STANDARDS

A. M-H (CPM) - CPM in Construction Management - Project Management with CPM; 2016, with Addendum (2021).

1.4 DEFINITIONS

A. Activity: A discrete part of a project that can be identified for planning, scheduling, monitoring, and controlling the construction Project. Activities included in a construction schedule consume time and resources.
   1. Critical Activity: An activity on the critical path that must start and finish on the planned early start and finish times.
   2. Predecessor Activity: An activity that precedes another activity in the network.
   3. Successor Activity: An activity that follows another activity in the network.
B. CPM: Critical Path Method, which is a method of planning and scheduling a construction project where activities are arranged based on activity relationships. Network calculations determine the critical path of Project and when activities can be performed.
C. Critical Path: The longest connected chain of interdependent activities through the network schedule that establishes the minimum overall Project duration and contains no float.
D. Event: The starting or ending point of an activity.
E. Float: The measure of leeway in starting and completing an activity.
   1. Float time is not for the exclusive use or benefit of either Owner or Contractor, but is a jointly owned, expiring Project resource available to both parties as needed to meet schedule milestones and Contract completion date.
   2. Free float is the amount of time an activity can be delayed without adversely affecting the early start of the successor activity.
   3. Total float is the measure of leeway in starting or completing an activity without adversely affecting the planned Project completion date.
F. Resource Loading: The allocation of manpower and equipment necessary for completing an activity as scheduled.

1.5 SUBMITTALS

A. Within 10 days after date of Agreement, submit preliminary schedule defining planned operations for the first 60 days of Work, with a general outline for remainder of Work.
B. If preliminary schedule requires revision after review, submit revised schedule within 10 days.
C. Submit updated schedule with each Application for Payment.
D. Submit in PDF format.

1.6 QUALITY ASSURANCE

A. Scheduler: Contractor's personnel or specialist Consultant specializing in CPM scheduling with 5 years minimum experience in scheduling construction work of a complexity comparable to this Project, and

having use of computer facilities capable of delivering a detailed graphic printout within 48 hours of request.

1.7 SCHEDULE FORMAT

A. Listings: In chronological order according to the start date for each activity. Identify each activity with the applicable specification section number.

1.8 COORDINATION

A. Coordinate Contractor's Construction Schedule with the schedule of values, list of subcontracts, submittal schedule, progress reports, payment requests, and other required schedules and reports.
   1. Secure time commitments for performing critical elements of the Work from entities involved.
   2. Coordinate each construction activity in the network with other activities, and schedule them in proper sequence.

PART 2 PRODUCTS - NOT USED

PART 3 EXECUTION

3.1 PRELIMINARY SCHEDULE

A. Prepare preliminary schedule in the form of a horizontal bar chart.

3.2 CONTENT

A. Show complete sequence of construction by activity, with dates for beginning and completion of each element of construction.
B. Identify each item by specification section number.
C. Show accumulated percentage of completion of each item, and total percentage of Work completed, as of the first day of each month.
D. Provide legend for symbols and abbreviations used.

3.3 BAR CHARTS

A. Include a separate bar for each major portion of Work or operation.
B. Identify the first work day of each week.

3.4 NETWORK ANALYSIS

A. Prepare network analysis diagrams and supporting mathematical analyses using the Critical Path Method.
B. Illustrate order and interdependence of activities and sequence of work; how start of a given activity depends on completion of preceding activities, and how completion of the activity may restrain start of subsequent activities.
   1. Activities: Treat each floor or separate area as a separate numbered activity for each main element of the Work.
   2. Critical Path Activities: Identify critical path activities, including those for interim completion dates. Scheduled start and completion dates shall be consistent with Contract milestone dates.
   3. Constraints: Include constraints and work restrictions indicated in the Contract Documents and show how the sequence of the Work is affected.
   4. Construction Areas: Identify each major area of construction for each major portion of the Work. Indicate where each construction activity within a major area must be sequenced or integrated with other construction activities to provide for the following.
   5. Milestones: Include milestones indicated in the Contract Documents in schedule, including, but not limited to, the Notice to Proceed, Substantial Completion, and Final Completion.
   6. Recovery Schedule: When periodic update indicates the Work is 14 or more calendar days behind the current approved schedule, submit a separate recovery schedule indicating means by which

Contractor intends to regain compliance with the schedule. Indicate changes to working hours, working days, crew sizes, equipment required to achieve compliance, and date by which recovery will be accomplished.

7. Contract Modifications: For each proposed contract modification and concurrent with its submission, prepare a time-impact analysis using a network fragment to demonstrate the effect of the proposed change on the overall Project schedule.

C. Mathematical Analysis: Tabulate each activity of detailed network diagrams, using calendar dates, and identify for each activity:
   1. Preceding and following event numbers.
   2. Activity description.
   3. Estimated duration of activity, in maximum 15 day intervals.
   4. Earliest start date.
   5. Earliest finish date.
   6. Actual start date.
   7. Actual finish date.
   8. Latest start date.
   9. Latest finish date.
   10. Total and free float; float time shall accrue to Owner and to Owner's benefit.
   11. Monetary value of activity, keyed to Schedule of Values.
   12. Percentage of activity completed.
   13. Responsibility.

D. Analysis Program: Capable of compiling monetary value of completed and partially completed activities, accepting revised completion dates, and recomputation of all dates and float.

E. Required Reports: List activities in sorts or groups:
   1. By preceding work item or event number from lowest to highest.
   2. By amount of float, then in order of early start.

3.5 REVIEW AND EVALUATION OF SCHEDULE

A. Participate in joint review and evaluation of schedule with Architect at each submittal.

B. Evaluate project status to determine work behind schedule and work ahead of schedule.

C. After review, revise as necessary as result of review, and resubmit within 10 days.

3.6 UPDATING SCHEDULE

A. Maintain schedules to record actual start and finish dates of completed activities.

B. Indicate progress of each activity to date of revision, with projected completion date of each activity.

C. Annotate diagrams to graphically depict current status of Work.

D. Identify activities modified since previous submittal, major changes in Work, and other identifiable changes.

E. Indicate changes required to maintain Date of Substantial Completion.

F. Submit reports required to support recommended changes.

3.7 DISTRIBUTION OF SCHEDULE

A. Distribute copies of updated schedules to Contractor's project site file, to subcontractors, suppliers, Architect, Owner, and other concerned parties.

B. Instruct recipients to promptly report, in writing, problems anticipated by projections indicated in schedules.

END OF SECTION

SECTION 014000 - QUALITY REQUIREMENTS

PART 1 GENERAL

1.1 SECTION INCLUDES

A. Submittals.
B. Quality assurance.
C. References and standards.
D. Testing and inspection agencies and services.
E. Contractor's design-related professional design services.
F. Control of installation.
G. Mock-ups.
H. Defect Assessment.

1.2 RELATED REQUIREMENTS

A. Section 013000 - Administrative Requirements: Submittal procedures.
B. Section 016000 - Product Requirements: Requirements for material and product quality.

1.3 REFERENCE STANDARDS

A. 29 CFR 1910.7 - Occupational Safety and Health Administration - Definition and requirements for a nationally recognized testing laboratory; Current Edition.
B. ASTM C1021 - Standard Practice for Laboratories Engaged in Testing of Building Sealants; 2008 (Reapproved 2023).
C. ASTM C1077 - Standard Practice for Agencies Testing Concrete and Concrete Aggregates for Use in Construction and Criteria for Testing Agency Evaluation; 2026.
D. ASTM C1093 - Standard Practice for Accreditation of Testing Agencies for Masonry; 2025.
E. ASTM D3740 - Standard Practice for Minimum Requirements for Agencies Engaged in Testing and/or Inspection of Soil and Rock as Used in Engineering Design and Construction; 2023.
F. ASTM E329 - Standard Specification for Agencies Engaged in Construction Inspection, Testing, or Special Inspection; 2025a.
G. ASTM E543 - Standard Specification for Agencies Performing Nondestructive Testing; 2026.
H. ASTM E699 - Standard Specification for Agencies Involved in Testing, Quality Assurance, and Evaluating of Manufactured Building Components; 2016.
I. NRTL - Nationally Recognized Testing Laboratory; Current Edition.
J. NVLAP - National Voluntary Laboratory Accreditation Program; Current Edition.

1.4 DEFINITIONS

A. Contractor's Quality Control Plan: Contractor's management plan for executing the Contract for Construction.
B. Contractor's Professional Design Services: Design of some aspect or portion of the project by party other than the design professional of record. Provide these services as part of the Contract for Construction.
   1. Design Services Types Required:
      a. Construction-Related: Services Contractor needs to provide in order to carry out the Contractor’s sole responsibilities for construction means, methods, techniques, sequences, and procedures.
      b. Design-Related: Design services explicitly required to be performed by another design professional due to highly-technical and/or specialized nature of a portion of the project. Services primarily involve engineering analysis, calculations, and design, and are not intended to alter the aesthetic aspects of the design.
C. Design Data: Design-related, signed and sealed drawings, calculations, specifications, certifications, shop drawings and other submittals provided by Contractor, and prepared directly by, or under direct supervision of, appropriately licensed design professional.

D. Experienced: An entity or individual who successfully completed a minimum of 5 previous projects similar in nature, size, and extent to this Project; being familiar with special requirements indicated; and having complied with requirements of authorities having jurisdiction.

E. Field Quality-Control Tests and Inspections: Tests and inspections that are performed on-site for installation of the Work and for completed Work.

F. Installer/Applicator/Erector: Contractor or another entity engaged by Contractor as an employee, subcontractor, or sub-subcontractor, to perform a particular construction operation, including installation, erection, application, assembly, and similar operations.

1. Use of trade-specific terminology in referring to a Work result does not require that certain construction activities specified apply exclusively to specific trade(s).

G. Mock-ups: Physical assemblies of portions of the Work constructed to establish the standard by which the Work will be judged. Mock-ups are not samples.

1. Mock-ups are used for one or more of the following:

a. Verify selections made under sample submittals.

b. Demonstrate aesthetic effects.

c. Demonstrate the qualities of products and workmanship.

d. Demonstrate successful installation of interfaces between components and systems.

e. Perform preconstruction testing to determine system performance.

2. In-Place Mock-ups: Constructed on-site in their actual final location as part of permanent construction.

H. Preconstruction Testing: Performed specifically for Project before products and materials are incorporated into the Work, to verify performance or compliance with specified criteria. Unless otherwise indicated, copies of reports of tests or inspections performed for other than the Project do not meet this definition.

I. Product Tests: Performed by a Nationally Recognized Testing Laboratory NRTL according to 29 CFR 1910.7, by a testing agency accredited according to National Institute of Standards and Technology's NVLAP, or by a testing agency qualified to conduct product testing and acceptable to authorities having jurisdiction, to establish product performance and compliance with specified requirements.

J. Source Quality-Control Tests and Inspections: Performed at the source (e.g., plant, mill, factory, or shop).

K. Testing Agency: An entity engaged to perform specific tests, inspections, or both. The term "testing laboratory" has the same meaning as the term "testing agency."

L. Quality-Assurance Services: Activities, actions, and procedures performed before and during execution of the Work, to guard against defects and deficiencies and substantiate that proposed construction will comply with requirements.

M. Quality-Control Services: Tests, inspections, procedures, and related actions during and after execution of the Work, to evaluate that actual products incorporated into the Work and completed construction comply with requirements. Contractor's quality-control services do not include contract administration activities performed by Architect.

1.5 CONFLICTING REQUIREMENTS

A. Conflicting Standards and Other Requirements: If compliance with two or more standards or requirements is specified and the standards or requirements establish different or conflicting requirements for minimum quantities or quality levels, inform the Architect regarding the conflict and obtain clarification prior to proceeding with the Work. Refer conflicting requirements that are different, but apparently equal, to Architect for clarification before proceeding.

B. Minimum Quantity or Quality Levels: The quantity or quality level shown or specified is the minimum provided or performed. The actual installation may comply exactly with the minimum quantity or quality specified, or it may exceed the minimum within reasonable limits. To comply with these requirements, indicated numeric values are minimum or maximum, as appropriate, for the context of requirements. Refer uncertainties to Architect for a decision before proceeding.

1.6 CONTRACTOR'S DESIGN-RELATED PROFESSIONAL DESIGN SERVICES

A. Coordination: Contractor's professional design services are subject to requirements of project's Conditions for Construction Contract.

B. Base design on performance and/or design criteria indicated in individual specification sections.

C. Scope of Contractor's Professional Design Services: As indicated in each section.

1.7 SUBMITTALS

A. See Section 013000 - Administrative Requirements, for submittal procedures.

B. Designer's Qualification Statement: Submit for Architect's knowledge as contract administrator, or for Owner's information.

1. Include information for each individual professional responsible for producing, or supervising production of, design-related professional services provided by Contractor.

a. Full name.

b. Professional licensure information.

c. Statement addressing extent and depth of experience specifically relevant to design of items assigned to Contractor.

C. Design Data: Submit for Architect's knowledge as contract administrator for the limited purpose of assessing compliance with information given and the design concept expressed in the Contract Documents, or for Owner's information.

1. Include calculations that have been used to demonstrate compliance to performance and regulatory criteria provided, and to determine design solutions.

2. Include required product data and shop drawings.

3. Include a statement or certification attesting that design data complies with criteria indicated, such as building codes, loads, functional, and similar engineering requirements.

4. Include signature and seal of design professional responsible for allocated design services on calculations and drawings.

D. Test Reports: After each test/inspection, promptly submit 2 copies of report to Architect and to Contractor.

1. Include:

a. Date issued.

b. Project title and number.

c. Name of inspector.

d. Date and time of sampling or inspection.

e. Identification of product and specifications section.

f. Location in the Project.

g. Type of test/inspection.

h. Date of test/inspection.

i. Results of test/inspection.

j. Compliance with Contract Documents.

k. When requested by Architect, provide interpretation of results.

2. Test report submittals are for Architect's knowledge as contract administrator for the limited purpose of assessing compliance with information given and the design concept expressed in the Contract Documents, or for Owner's information.

E. Certificates: When specified in individual specification sections, submit certification by the manufacturer and Contractor or installation/application subcontractor to Architect, in quantities specified for Product Data.

1. Indicate material or product complies with or exceeds specified requirements. Submit supporting reference data, affidavits, and certifications as appropriate.

F. Manufacturer's Instructions: When specified in individual specification sections, submit printed instructions for delivery, storage, assembly, installation, start-up, adjusting, and finishing, for the Owner's information. Indicate special procedures, perimeter conditions requiring special attention, and special environmental criteria required for application or installation.

G. Manufacturer's Field Reports: Submit reports for Architect's benefit as contract administrator or for Owner.

1. Submit for information for the limited purpose of assessing compliance with information given and the design concept expressed in the Contract Documents.

H. Erection Drawings: Submit drawings for Architect's benefit as contract administrator or for Owner.

1. Submit for information for the limited purpose of assessing compliance with information given and the design concept expressed in the Contract Documents.

I. Mock-up Shop Drawings:

1. Include plans, sections, elevations, and details, indicating materials and size of mock-up construction.

2. Indicate manufacturer and model number of individual components.

3. Provide axonometric drawings for conditions difficult to illustrate in two dimensions.

1.8 QUALITY ASSURANCE

A. Testing Agency Qualifications:
   1. Prior to start of work, submit agency name, address, and telephone number, and names of full time registered Engineer and responsible officer.
   2. Submit copy of report of laboratory facilities inspection made by NIST Construction Materials Reference Laboratory during most recent inspection, with memorandum of remedies of any deficiencies reported by the inspection.

B. Designer Qualifications: Where professional engineering design services and design data submittals are specifically required of Contractor by Contract Documents, provide services of a Professional Engineer experienced in design of this type of work and licensed in the State in which the Project is located.

C. Contractor's Quality Control (CQC) Plan:
   1. Prior to start of work, submit a comprehensive plan describing how contract deliverables will be produced. Tailor CQC plan to specific requirements of the project. Include the following information:
      a. Management Structure: Identify personnel responsible for quality. Include a chart showing lines of authority.
      b. Owner will not make a separate payment for providing and maintaining a Quality Control Plan. Include associated costs in Bid price.
      c. Acceptance of the plan is required prior to start of construction activities not including mobilization work. Owner's acceptance of the plan will be conditional and predicated on continuing satisfactory adherence to the plan. Owner reserves the right to require Contractor to make changes to the plan and operations, including removal of personnel, as necessary, to obtain specified quality of work results.

D. Qualifications paragraphs in this article establish the minimum qualification levels required; individual specification sections specify additional requirements.

E. Manufacturer Qualifications: A firm experienced in manufacturing products or systems similar to those indicated for this Project and with a record of successful in-service performance, as well as sufficient production capacity to produce required units. As applicable, procure products from manufacturers able to meet qualification requirements, warranty requirements, and technical or factory-authorized service representative requirements.

F. Fabricator Qualifications: A firm experienced in producing products similar to those indicated for this Project and with a record of successful in-service performance, as well as sufficient production capacity to produce required units.

G. Installer Qualifications: A firm or individual experienced in installing, erecting, applying, or assembling work similar in material, design, and extent to that indicated for this Project, whose work has resulted in construction with a record of successful in-service performance.

H. Professional Engineer Qualifications: A professional engineer who is legally qualified to practice in jurisdiction where Project is located and who is experienced in providing engineering services of the kind indicated. Engineering services are defined as those performed for installations of the system, assembly, or product that is similar in material, design, and extent to those indicated for this Project.

I. Specialists: Certain specification sections require that specific construction activities be performed by entities who are recognized experts in those operations. Specialists will satisfy qualification requirements indicated and engage in the activities indicated.
   1. Requirements of authorities having jurisdiction supersede requirements for specialists.

J. Testing and Inspecting Agency Qualifications: An NRTL, an NVLAP, or an independent agency with the experience and capability to conduct testing and inspection indicated, as documented in accordance with ASTM E329, and with additional qualifications specified in individual Sections; and, where required by authorities having jurisdiction, that is acceptable to authorities.

K. Manufacturer's Technical Representative Qualifications: An authorized representative of manufacturer who is trained and approved by manufacturer to observe and inspect installation of manufacturer's products that are similar in material, design, and extent to those indicated for this Project.

L. Factory-Authorized Service Representative Qualifications: An authorized representative of manufacturer who is trained and approved by manufacturer to inspect, demonstrate, repair, and perform service on installations of manufacturer's products that are similar in material, design, and extent to those indicated for this Project.

M. Preconstruction Testing: Where testing agency is indicated to perform preconstruction testing for compliance with specified requirements for performance and test methods, comply with the following Contractor's responsibilities, including the following:
   1. Provide test specimens representative of proposed products and construction.
   2. Submit specimens in a timely manner with sufficient time for testing and analyzing results to prevent delaying the Work.
   3. Provide sizes and configurations of test assemblies, mock-ups, and laboratory mock-ups to adequately demonstrate capability of products to comply with performance requirements.
   4. Build site-assembled test assemblies and mock-ups, using installers who will perform same tasks for Project.
   5. When testing is complete, remove test specimens and test assemblies, and mock-ups; do not reuse products on Project.
   6. Testing Agency Responsibilities: Submit a certified written report of each test, inspection, and similar quality-assurance service to Architect and Commissioning Authority, with copy to Contractor. Interpret tests and inspections, and state in each report whether tested and inspected Work complies with or deviates from the Contract Documents.

N. Mock-ups: Before installing portions of the Work requiring mock-ups, build mock-ups for each form of construction and finish required to comply with the following requirements, using materials indicated for the completed Work:
   1. Build mock-ups of size indicated.
   2. Build mock-ups in location indicated or, if not indicated, as directed by Architect.
   3. Notify Architect no less than 5 business days in advance of dates and times when mock-ups will be constructed.
   4. Employ supervisory personnel who will oversee mock-up construction. Employ workers who will be employed to perform same tasks during the construction at Project.
   5. Demonstrate the proposed range of aesthetic effects and workmanship.
   6. Obtain Architect's approval of mock-ups before starting corresponding Work, fabrication, or construction.
      a. Allow 5 business days for initial review and each re-review of each mock-up.
   7. Promptly correct unsatisfactory conditions noted by Architect's preliminary review, to the satisfaction of the Architect, before completion of final mock-up.
   8. Approval of mock-ups by the Architect does not constitute approval of deviations from the Contract Documents contained in mock-ups unless Architect specifically approves such deviations in writing.
   9. Maintain mock-ups during construction in an undisturbed condition as a standard for judging the completed Work.
   10. Demolish and remove mockups when directed unless otherwise indicated.

O. Mock-ups: Comply with requirements of preconstruction testing and those specified in individual Specification Sections, and as follows:
   1. Laboratory Mock-ups: Full-size physical assemblies constructed and tested at testing facility to verify performance characteristics.
   2. Integrated Exterior Mock-ups: Construct integrated exterior mock-ups as indicated on drawings, or if not indicated, as directed by Architect. Construct mock-ups to demonstrate constructability, coordination of trades, and sequencing of Work; and to ensure materials, components, subassemblies, assemblies, and interfaces integrate into a system complying with indicated performance and aesthetic requirements.
      a. Design and construct foundation and superstructure to support free-standing integrated exterior mock-ups.
      b. Build integrated exterior mock-ups using installers and construction methods that will be used in completed construction.
      c. Use specified products that have been approved by Architect. Coordinate installation of materials and products specified in individual specification sections that include Work included in integrated exterior mock-ups.
      d. Provide and document modifications to construction details and interfaces between components and systems required to properly sequence the Work, or to pass performance testing requirements. Obtain Architect's approval for modifications.
      e. Test integrated exterior mock-ups as specified in other section(s).

3. Product Mock-ups: Mock-ups that may include multiple products, materials, or systems specified in a single section.
4. In-Place Mock-ups: Mock-ups constructed on-site in their actual final location as part of permanent construction.
5. First Installation of Repetitive Building Materials: For repetitive building materials that do not require formal mock-ups, notify Architect no less than 5 business days in advance of the first installation of such building material.

1.9 REFERENCES AND STANDARDS

A. For products and workmanship specified by reference to a document or documents not included in the Project Manual, also referred to as reference standards, comply with requirements of the standard, except when more rigid requirements are specified or are required by applicable codes.
B. Comply with reference standard of date of issue current on date of Contract Documents, except where a specific date is established by applicable code.
C. Obtain copies of standards where required by product specification sections.
D. Maintain copy at project site during submittals, planning, and progress of the specific work, until Substantial Completion.
E. Should specified reference standards conflict with Contract Documents, request clarification from Architect before proceeding.
F. Neither the contractual relationships, duties, or responsibilities of the parties in Contract nor those of Architect shall be altered from Contract Documents by mention or inference otherwise in any reference document.

1.10 QUALITY CONTROL

A. Owner Responsibilities: Where quality-control services are indicated as Owner's responsibility, Owner will engage a qualified testing agency to perform these services.
   1. Owner will furnish Contractor with names, addresses, and telephone numbers of testing agencies engaged and a description of types of testing and inspection they are engaged to perform.
   2. Costs for retesting and reinspecting construction that replaces or is necessitated by Work that failed to comply with the Contract Documents will be charged to Contractor, and the Contract Sum will be adjusted by Change Order.
B. Contractor Responsibilities: Tests and inspections not explicitly assigned to Owner are Contractor's responsibility. Perform additional quality-control activities, whether specified or not, to verify and document that the Work complies with requirements.
   1. Unless otherwise indicated, provide quality-control services specified and those required by authorities having jurisdiction. Perform quality-control services required of Contractor by authorities having jurisdiction, whether specified or not.
   2. Engage a qualified testing agency to perform quality-control services.
      a. Contractor will not employ same entity engaged by Owner, unless agreed to in writing by Owner.
   3. Notify testing agencies at least 24 hours in advance of time when Work that requires testing or inspection will be performed.
   4. Where quality-control services are indicated as Contractor's responsibility, submit a certified written report, in duplicate, of each quality-control service.
   5. Testing and inspection requested by Contractor and not required by the Contract Documents are Contractor's responsibility.
   6. Submit additional copies of each written report directly to authorities having jurisdiction, when they so direct.
C. Retesting/Reinspecting: Regardless of whether original tests or inspections were Contractor's responsibility, provide quality-control services, including retesting and reinspecting, for construction that replaced Work that failed to comply with the Contract Documents.
D. Testing Agency Responsibilities: Cooperate with Architect, Commissioning Authority and Contractor in performance of duties. Provide qualified personnel to perform required tests and inspections.
   1. Notify Architect, Commissioning Authority, and Contractor promptly of irregularities or deficiencies observed in the Work during performance of its services.

2. Determine the locations from which test samples will be taken and in which in-situ tests are conducted.
3. Conduct and interpret tests and inspections, and state in each report whether tested and inspected Work complies with or deviates from requirements.
4. Submit a certified written report, in duplicate, of each test, inspection, and similar quality-control service through Contractor.
5. Do not release, revoke, alter, or increase the Contract Document requirements or approve or accept any portion of the Work.
6. Do not perform duties of Contractor.

E. Manufacturer's Field Services: Where indicated, engage a factory-authorized service representative to inspect field-assembled components and equipment installation, including service connections. Report results in writing as specified in Section 013000 - Administrative Requirements.

F. Manufacturer's Technical Services: Where indicated, engage a manufacturer's technical representative to observe and inspect the Work. Manufacturer's technical representative's services include participation in preinstallation conferences, examination of substrates and conditions, verification of materials, observation of Installer activities, inspection of completed portions of the Work, and submittal of written reports.

G. Contractor's Associated Requirements and Services: Cooperate with agencies and representatives performing required tests, inspections, and similar quality-control services, and provide reasonable auxiliary services as requested. Notify agency sufficiently in advance of operations to permit assignment of personnel. Provide the following:
1. Access to the Work.
2. Incidental labor and facilities necessary to facilitate tests and inspections.
3. Adequate quantities of representative samples of materials that require testing and inspection. Assist agency in obtaining samples.
4. Facilities for storage and field curing of test samples.
5. Delivery of samples to testing agencies.
6. Preliminary design mix proposed for use for material mixes that require control by testing agency.
7. Security and protection for samples and for testing and inspection equipment at Project site.

H. Coordination: Coordinate sequence of activities to accommodate required quality-assurance and quality-control services with a minimum of delay and to avoid necessity of removing and replacing construction to accommodate testing and inspection.
1. Schedule times for tests, inspections, obtaining samples, and similar activities.

I. Schedule of Tests and Inspections: Prepare a schedule of tests, inspections, and similar quality-control services required by the Contract Documents as a component of Contractor's quality-control plan. Coordinate and submit concurrently with Contractor's Construction Schedule. Update and submit with each Application for Payment.
1. Schedule Contents: Include tests, inspections, and quality-control services, including Contractor- and Owner-retained services, commissioning activities, and other Project-required services paid for by other entities.
2. Distribution: Distribute schedule to Owner, Architect, Commissioning Authority, testing agencies, and each party involved in performance of portions of the Work where tests and inspections are required.

1.11 TESTING AND INSPECTION AGENCIES AND SERVICES

A. As indicated in individual specification sections, Owner or Contractor shall employ and pay for services of an independent testing agency to perform other specified testing.

B. Employment of agency in no way relieves Contractor of obligation to perform Work in accordance with requirements of Contract Documents.

C. Contractor Employed Agency:
1. Testing agency: Comply with requirements of ASTM E329, ASTM E543, ASTM E699, ASTM C1021, ASTM C1077, ASTM C1093, and ASTM D3740.
2. Inspection agency: Comply with requirements of ASTM D3740 and ASTM E329.

PART 2 PRODUCTS - NOT USED

PART 3 EXECUTION

3.1 CONTROL OF INSTALLATION

A. Monitor quality control over suppliers, manufacturers, products, services, site conditions, and workmanship, to produce work of specified quality.
B. Comply with manufacturers' instructions, including each step in sequence.
C. Should manufacturers' instructions conflict with Contract Documents, request clarification from Architect before proceeding.
D. Comply with specified standards as minimum quality for the work except where more stringent tolerances, codes, or specified requirements indicate higher standards or more precise workmanship.
E. Have work performed by persons qualified to produce required and specified quality.
F. Verify that field measurements are as indicated on shop drawings or as instructed by the manufacturer.
G. Secure products in place with positive anchorage devices designed and sized to withstand stresses, vibration, physical distortion, and disfigurement.

3.2 MOCK-UPS

A. Before installing portions of the Work where mock-ups are required, construct mock-ups in location and size indicated for each form of construction and finish required to comply with the following requirements, using materials indicated for the completed Work. The purpose of mock-up is to demonstrate the proposed range of aesthetic effects and workmanship.
B. Accepted mock-ups establish the standard of quality the Architect will use to judge the Work.
C. Tests shall be performed under provisions identified in this section and identified in the respective product specification sections.
D. Assemble and erect specified items with specified attachment and anchorage devices, flashings, seals, and finishes.
E. Architect will use accepted mock-ups as a comparison standard for the remaining Work.
F. Where mock-up has been accepted by Architect and is specified in product specification sections to be removed, protect mock-up throughout construction, remove mock-up and clear area when directed to do so by Architect.

3.3 TESTING AND INSPECTION

A. See individual specification sections for testing and inspection required.
B. Testing Agency Duties:
    1. Provide qualified personnel at site. Cooperate with Architect and Contractor in performance of services.
    2. Perform specified sampling and testing of products in accordance with specified standards.
    3. Ascertain compliance of materials and mixes with requirements of Contract Documents.
    4. Promptly notify Architect and Contractor of observed irregularities or non-compliance of Work or products.
    5. Perform additional tests and inspections required by Architect.
    6. Submit reports of all tests/inspections specified.
C. Limits on Testing/Inspection Agency Authority:
    1. Agency may not release, revoke, alter, or enlarge on requirements of Contract Documents.
    2. Agency may not approve or accept any portion of the Work.
    3. Agency may not assume any duties of Contractor.
    4. Agency has no authority to stop the Work.
D. Contractor Responsibilities:
    1. Deliver to agency at designated location, adequate samples of materials proposed to be used that require testing, along with proposed mix designs.

2. Cooperate with laboratory personnel, and provide access to the Work and to manufacturers' facilities.
3. Provide incidental labor and facilities:
   a. To provide access to Work to be tested/inspected.
   b. To obtain and handle samples at the site or at source of Products to be tested/inspected.
   c. To facilitate tests/inspections.
   d. To provide storage and curing of test samples.
4. Notify Architect and laboratory 24 hours prior to expected time for operations requiring testing/inspection services.
5. Employ services of an independent qualified testing laboratory and pay for additional samples, tests, and inspections required by Contractor beyond specified requirements.
6. Arrange with Owner's agency and pay for additional samples, tests, and inspections required by Contractor beyond specified requirements.
7. Test and Inspection Log: Prepare a record of tests and inspections. Include the following:
   a. Date test or inspection was conducted.
   b. Description of the Work tested or inspected.
   c. Date test or inspection results were transmitted to Architect.
   d. Identification of testing agency or special inspector conducting test or inspection.
8. Maintain log at Project site. Post changes and revisions as they occur. Provide access to test and inspection log for Architect's, Commissioning Authority's, and authorities' having jurisdiction reference during normal working hours.
   a. Submit log at Project closeout as part of Project Record Documents.

E. Re-testing required because of non-compliance with specified requirements shall be performed by the same agency on instructions by Architect.

F. Re-testing required because of non-compliance with specified requirements shall be paid for by Contractor

3.4 DEFECT ASSESSMENT

A. Replace Work or portions of the Work not complying with specified requirements.

3.5 REPAIR AND PROTECTION

A. General: On completion of testing, inspection, sample-taking, and similar services, repair damaged construction and restore substrates and finishes.
   1. Provide materials and comply with installation requirements specified in other specification sections or matching existing substrates and finishes. Restore patched areas and extend restoration into adjoining areas with durable seams that are as invisible as possible. Comply with the Contract Document requirements for cutting and patching in Section 017000 - Execution and Closeout Requirements.

B. Protect construction exposed by or for quality-control service activities.

C. Repair and protection are Contractor's responsibility, regardless of the assignment of responsibility for quality-control services.

3.6 SCHEDULE OF TESTING AND INSPECTIONS

A. In conjunction with the “Summary of Special Inspection” and “Special Inspection Program” indicated on the drawings and other special inspections required by authorities having jurisdiction, coordinate with testing and inspection for the following:

Number	Description	Testing Responsibility
1	Inspection of Fabricators: Where fabrication of structural load-bearing members and assemblies is being performed on the premises of a fabricator’s shop, special inspection of the fabricated items shall be required by CBC Section 1704.2.5.	By Owner-retained testing agency
2	Steel Construction: Per CBC Section 1705.2, CBC Table 1705.2.4, and as indicated on the drawings.	By Owner-retained testing agency

3	Concrete and Shotcrete Construction: Per CBC Section 1705.3, CBC Table 1705.3, and as indicated on the drawings.	By Owner-retained testing agency
4	Masonry Construction: Per CBC Section 1705.4 and as indicated on the drawings.	By Owner-retained testing agency
5	Wood Construction: Per CBC Section 1705.5 and as indicated on the drawings.	Not Applicable
6	Soils: Per CBC Section 1705.6, Table 1705.6, and as indicated on the drawings.	By Owner-retained testing agency
7	Cast-in-Place Deep Foundations: Per CBC Section 1705.8,Table 1705.8, and as indicated on the drawings.	By Owner-retained testing agency
8	Sprayed Fire-Resistant Materials: Per CBC Section 1704.15.	Not Applicable
9	Mastic and Intumescent Fire-Resistant Coatings: Per CBC Section 1704.16.	Not Applicable
10	Exterior Insulation and Finish Systems (EIFS): Per CBC 1705.17 and as required by manufacturer's ICC evaluation report.	Not Applicable
11	Seismic Resistance: Per CBC 1705.14, the statement of special inspections shall include seismic requirements for the following cases and as indicated: a. The seismic-force-resisting systems in structures in accordance with CBC Sections 1705.14.1.1 b. Structural steel per CBC Section 1705.14.1.2 c Designated seismic systems per CBC Section 1705.14.3 d. Seismic Isolation Systems per CBC Section 1705.14.	 By Owner-retained testing agency By Owner-retained testing agency By Owner-retained testing agency By Owner-retained testing agency
12	Architectural Components: Periodic special inspection is required during the erection and fastening of: a. Exterior cladding (> 30 feet above grade) b. Interior and exterior nonbearing walls (>15 psf) c. Interior and exterior veneer (> 5psf) d. Acoustic ceiling suspension system,as required by manufacturer's ICC evaluation report e. Post-installed anchors per CBC 1705.3 and/or applicable ICC evaluation reports. f. Exterior insulation and finish systems (per CBC 1407) g. Below-grade waterproofing (full-time inspection)	 Not Applicable Not Applicable Not Applicable By Owner-retained testing agency By Owner-retained testing agency Not Applicable By Owner-retained testing agency
13	Mechanical and Electrical Components: Periodic special inspection of plumbing, mechanical, and electrical components shall be required for the following: a. Anchorage of electrical equipment for emergency and standby power systems in structures assigned to Seismic Design Category C, D, E, or F. b. Anchorage of other electrical equipment in structures assigned to Seismic Design Category E or F. c. Installation and anchorage of piping systems designed to carry hazardous materials and their associated mechanical units in structures assigned to Seismic Design Category C, D, E, or F.	 By Owner-retained testing agency Not Applicable By Owner-retained testing agency

	d. Installation and anchorage of ductwork designed to carry hazardous materials in structures assigned to Seismic Design Category C, D, E, or F.	Not Applicable
	e. Installation and anchorage of vibration isolation systems in structures designed to Seismic Design Category C, D, E, or F where the approved construction documents require a nominal clearance of 1/4 inch or less between the equipment support frame and restraint	Not Applicable

END OF SECTION

SECTION 015000 - TEMPORARY FACILITIES AND CONTROLS

PART 1 GENERAL

1.1 SECTION INCLUDES

A. Temporary control plans.
B. Temporary utilities.
C. Temporary telecommunications services.
D. Temporary sanitary facilities.
E. Temporary lighting.
F. Temporary Controls: Barriers, enclosures, fencing, and sound mitigation.
G. Security requirements.
H. Environmental protection.
I. Vehicular access and parking.
J. Waste removal facilities and services.
K. Project identification sign.
L. Field offices.
M. Equipment.
N. Moisture and Mold Control.

1.2 REFERENCE STANDARDS

A. ASTM E84 - Standard Test Method for Surface Burning Characteristics of Building Materials; 2026.
B. ASTM E90 - Standard Test Method for Laboratory Measurement of Airborne Sound Transmission Loss of Building Partitions and Elements; 2023.
C. NFPA 70 - National Electrical Code; Most Recent Edition Adopted by Authority Having Jurisdiction, Including All Applicable Amendments and Supplements.
D. NFPA 241 - Standard for Safeguarding Construction, Alteration, and Demolition Operations; 2022, with Errata (2021).
E. NFPA 701 - Standard Methods of Fire Tests for Flame Propagation of Textiles and Films; 2023, with Errata.

1.3 TEMPORARY CONTROL PLANS

A. Site Utilization Plan: Show temporary facilities, temporary utility lines and connections, staging areas, construction site entrances, vehicle circulation, and parking areas for construction personnel.
B. Implementation and Termination Schedule: Within 15 business days of date established for commencement of the Work, submit schedule indicating implementation and termination dates of each temporary utility.
C. Project Identification and Temporary Signs: Show fabrication and installation details, including plans, elevations, details, layouts, type styles, graphic elements, and message content.
D. Erosion- and Sedimentation-Control Plan: Show compliance with requirements of environmental evaluation and/or Authorities Having Jurisdiction, whichever is more stringent. Also comply with erosion and sediment control requirements as indicated on drawings.
E. Fire-Safety Program: Show compliance with requirements of NFPA 241 and Authorities Having Jurisdiction. Indicate Contractor personnel responsible for management of fire-prevention program.
F. Moisture- and Mold-Protection Plan: Describe procedures and controls for protecting materials and construction from water absorption and damage and mold. Describe delivery, handling, storage, installation, and protection provisions for materials subject to water absorption or water damage.
    1. Indicate procedures for discarding water-damaged materials, protocols for mitigating water intrusion into completed Work, and requirements for replacing water-damaged Work.
    2. Indicate sequencing of work that requires water, such as plastering and terrazzo grinding, and describe plans for dealing with water from these operations. Show procedures for verifying that wet construction has dried sufficiently to permit installation of finish materials.
    3. Indicate methods to be used to avoid trapping water in finished work.

G. Dust- and HVAC-Control Plan: Submit coordination drawing and narrative that indicates the dust- and HVAC-control measures proposed for use, proposed locations, and proposed time frame for their operation. Include the following:
   1. Locations of dust-control partitions at each phase of work.
   2. HVAC system isolation schematic drawing.
   3. Location of proposed air-filtration system discharge.
   4. Waste-handling procedures.
   5. Other dust-control measures.
H. Noise and Vibration Control Plan: Identify construction activities that may impact the occupancy and use of existing spaces within the building or adjacent existing buildings, whether occupied by others, or occupied by Owner. Include the following:
   1. Methods used to meet the goals and requirements of Owner.
   2. Concrete cutting method(s) to be used.
   3. Location of construction devices on the site.
   4. Show compliance with the use and maintenance of quieted construction devices for the duration of the Project.
   5. Indicate activities that may disturb building occupants and that are planned to be performed during non-standard working hours as coordinated with Owner.

1.4 TEMPORARY UTILITIES

A. Owner will provide the following:
   1. Electrical power and metering, consisting of connection to existing facilities.
   2. Water supply, consisting of connection to existing facilities.
B. Provide and pay for all electrical power, lighting, water, heating and cooling, and ventilation required for construction purposes.
   1. Electric Service: Comply with NECA, NEMA, and UL standards and regulations for temporary electric service. Install service to comply with NFPA 70.
C. Use trigger-operated nozzles for water hoses, to avoid waste of water.

1.5 TELECOMMUNICATIONS SERVICES

A. Provide, maintain, and pay for telecommunications services to field office at time of project mobilization.
B. Telecommunications services shall include:
   1. Internet Connections: Minimum of one; DSL modem or faster.

1.6 TEMPORARY SANITARY FACILITIES

A. Provide and maintain required facilities and enclosures. Provide at time of project mobilization.
B. Maintain daily in clean and sanitary condition.
C. At end of construction, return facilities to same or better condition as originally found.

1.7 TEMPORARY LIGHTING FOR CONSTRUCTION PURPOSES

A. Provide and maintain following minimum lighting levels:
   1. General Work Areas: 5 foot-candles.
   2. Active Storage Areas and Loading Platforms: 3 foot-candles.
   3. Interior Areas: 5 foot-candles.
      a. Stairs: Provide temporary lighting on separate circuits energized 24 hours per day.
   4. First Aid Stations and offices: 30 foot-candles.
B. Provide additional temporary lighting as needed for construction activities, observations, and inspections.
C. Maintain lighting and provide routine repairs.
D. Permanent building lighting maybe utilized during construction.
   1. Provide new lamps for light fixtures before inspection for Substantial Completion.
E. When requested by Architect, provide temporary lighting with same lamp type as specified permanent lighting (incandescent, fluorescent, LED, HID) for observing finish colors.

1.8 BARRIERS

A. Provide barriers to prevent unauthorized entry to construction areas, to prevent access to areas that could be hazardous to workers or the public, to allow for owner's use of site and to protect existing facilities and adjacent properties from damage from construction operations and demolition.
B. Provide barricades and covered walkways required by governing authorities for public rights-of-way and for public access to existing building.
C. Protect non-owned vehicular traffic, stored materials, site, and structures from damage.

1.9 FENCING

A. Construction: Commercial grade chain link fence.
B. Provide 6 foot high fence around construction site; equip with vehicular and pedestrian gates with locks.
C. Polyethylene Sheet: Reinforced, fire-resistive sheet, 10-mil minimum thickness, with flame-spread rating of 15 or less in accordance with ASTM E84 and passing NFPA 701 Test Method 2.
D. Dust-Control Adhesive-Surface Walk-Off Mats: Provide mats, minimum 36 inches by 60 inches.

1.10 EXTERIOR ENCLOSURES

A. Provide temporary insulated weather tight closure of exterior openings to accommodate acceptable working conditions and protection for Products, to allow for temporary heating and maintenance of required ambient temperatures identified in individual specification sections, and to prevent entry of unauthorized persons. Provide access doors with self-closing hardware and locks.
    1. Where heating or cooling is needed and permanent enclosure is incomplete, insulate temporary enclosures.

1.11 SECURITY

A. Provide security and facilities to protect Work, and Owner's operations from unauthorized entry, vandalism, or theft.
B. Coordinate with Owner's security program.
C. Maintain program throughout construction period until Owner acceptance precludes need for Contractor security.
D. Entry Control:
    1. Restrict entry of persons and vehicles into Project site.
    2. Allow entrance only to authorized persons with proper identification.
    3. Maintain log of workers and visitors, make available to Owner on request.
    4. Coordinate access of Owner's personnel to site in coordination with Owner's security forces.
E. Personnel Identification:
    1. Provide identification badge to each person authorized to enter premises.
    2. Employee badges shall include photograph, name, employer, and expiration date.
    3. Maintain list of accredited persons, submit copy to Owner on request.
    4. Require return of badges at expiration of employment on the Work.

1.12 FACILITES PROTECTION

A. Protection of Existing Facilities: Protect existing vegetation, equipment, structures, utilities, and other improvements at Project site and on adjacent properties, except those indicated to be removed or altered. Repair damage to existing facilities.
    1. Where access to adjacent properties is required in order to affect protection of existing facilities, obtain written permission from adjacent property owner to access property for that purpose.
B. Environmental Protection: Provide protection, operate temporary facilities, and conduct construction as required to comply with environmental regulations and that minimize possible air, waterway, and subsoil contamination or pollution or other undesirable effects.
    1. Comply with work restrictions specified in Section 011000 - Summary.
C. Temporary Erosion and Sedimentation Control:
    1. Comply with Authorities Having Jurisdiction and as indicated on the drawings, whichever is more stringent.

D. Pest Control: Engage pest-control service to recommend practices to minimize attraction and harboring of rodents, roaches, and other pests and to perform extermination and control procedures at regular intervals, so Project will be free of pests and their residues at Substantial Completion. Perform control operations lawfully, using materials approved by Authorities Having Jurisdiction.

E. Security Enclosure and Lockup: Install temporary enclosure around partially completed areas of construction. Provide lockable entrances to prevent unauthorized entrance, vandalism, theft, and similar violations of security. Lock entrances at end of each workday.

F. Barricades, Warning Signs, and Lights: Comply with requirements of Authorities Having Jurisdiction for erecting structurally adequate barricades, including warning signs and lighting.

G. Temporary Egress: Provide temporary egress from existing occupied facilities as indicated and as required by Authorities Having Jurisdiction. Provide signage directing occupants to temporary egress.

H. Covered Walkway: Erect protective, covered walkway for passage of individuals through or adjacent to Project site. Coordinate with entrance gates, other facilities, and obstructions. Comply with regulations of Authorities Having Jurisdiction and requirements indicated on drawings.

1. Provide overhead decking, protective enclosure walls, handrails, barricades, warning signs, exit signs, lights, safe and well-drained walkways, and similar provisions for protection and safe passage.
2. Paint and maintain appearance of walkway for duration of the Work.

I. Temporary Fire Protection: Install and maintain temporary fire-protection facilities of types needed to protect against reasonably predictable and controllable fire losses. Comply with NFPA 241; manage fire-prevention program.

1.13 VEHICULAR ACCESS AND PARKING

A. Location approved by Owner.

B. Comply with regulations relating to use of streets and sidewalks, access to emergency facilities, and access for emergency vehicles.

C. Coordinate access and haul routes with governing authorities and Owner.

D. Provide and maintain access to fire hydrants, free of obstructions.

E. Designated existing on-site roads and driveways may be used for construction traffic.

F. Provide temporary on-site parking areas to accommodate construction personnel. When on-site space is not adequate, provide additional off-site parking.

1. Parking is subject to Owner's normal restrictions and limitations of liability.
2. Identify vehicles per Owner's requirements.
3. Prohibit heavy vehicles and construction equipment in parking areas.
4. Maintain construction parking areas, free of construction soiling and debris, and for repairing damage resulting from use.

1.14 WASTE REMOVAL

A. See Section 017419 - Construction Waste Management and Disposal, for additional requirements.

B. Provide waste removal facilities and services as required to maintain the site in clean and orderly condition.

C. Provide containers with lids. Remove trash from site weekly.

D. If materials to be recycled or re-used on the project must be stored on-site, provide suitable non-combustible containers; locate containers holding flammable material outside the structure unless otherwise approved by the Authorities Having Jurisdiction.

E. Open free-fall chutes are not permitted. Terminate closed chutes into appropriate containers with lids.

1.15 PROJECT IDENTIFICATION

A. Provide project identification sign of design and construction indicated on drawings.

B. Erect on site at location indicated.

C. No other signs are allowed without Owner permission except those required by law.

1.16 FIELD OFFICES

A. Office: Weathertight, with lighting, electrical outlets, heating, cooling equipment, and equipped with sturdy furniture, drawing rack, and drawing display table.
   1. Contractor is responsible for maintaining existing facilities used for construction support activities, including repair and cleaning.
B. Provide space for Project meetings, with table and chairs to accommodate 12 persons.
C. Remove temporary offices and sheds when authorized or directed by Owner.

1.17 EQUIPMENT

A. Fire Extinguishers: Portable, UL rated; with class and extinguishing agent as required by locations and classes of fire exposures.
B. HVAC Equipment: Unless Owner authorizes use of permanent HVAC system, provide vented, self-contained heaters with individual space thermostatic control.
   1. Use of gasoline-burning space heaters, open-flame heaters, or salamander-type heating units is prohibited.
   2. Heating, Cooling, and Dehumidifying Units: Listed and labeled for type of fuel being consumed, by a qualified testing agency acceptable to Authorities Having Jurisdiction, and marked for intended location and application.
   3. Permanent HVAC System: If Owner authorizes use of permanent HVAC system for temporary use during construction, provide filter with MERV of 8 at each return-air grille in system and remove at end of construction and clean HVAC system as required in Section 017000 - Execution and Closeout Requirements.
C. Air-Filtration Units: Primary and secondary HEPA-filter-equipped portable units with four-stage filtration. Provide single switch for emergency shutoff. Configure to run continuously.

1.18 MOISTURE AND MOLD CONTROL

A. Moisture and Mold Protection: Protect stored materials and installed Work in accordance with Moisture and Mold Protection Plan.
B. Exposed Construction Period: Before installation of weather barriers, when materials are subject to wetting and exposure and to airborne mold spores, protect as follows:
   1. Protect porous materials from water damage.
   2. Protect stored and installed material from flowing or standing water.
   3. Keep porous and organic materials from coming into prolonged contact with concrete.
   4. Remove standing water from decks.
   5. Keep deck openings covered or dammed.
C. Partially Enclosed Construction Period: After installation of weather barriers but before full enclosure and conditioning of building, when installed materials are still subject to infiltration of moisture and ambient mold spores, protect as follows:
   1. Do not load or install drywall or other porous materials or components, or items with high organic content, into partially enclosed building.
   2. Keep interior spaces reasonably clean and protected from water damage.
   3. Periodically collect and remove waste containing cellulose or other organic matter.
   4. Discard or replace water-damaged material.
   5. Do not install material that is wet.
   6. Discard and replace stored or installed material that begins to grow mold.
   7. Perform work in a sequence that allows wet materials adequate time to dry before enclosing the material in gypsum board or other interior finishes.
D. Controlled Construction Period: After completing and sealing of the building enclosure but prior to the full operation of permanent HVAC systems, maintain as follows:
   1. Control moisture and humidity inside building by maintaining effective dry-in conditions.
   2. Use temporary or permanent HVAC system to control humidity within ranges specified for installed and stored materials.

a. Hygroscopic materials that may support mold growth, including wood and gypsum-based products, that become wet during the course of construction and remain wet for 48 hours are considered defective and require replacing.

b. Measure moisture content of materials that have been exposed to moisture during construction operations or after installation. Record readings beginning at time of exposure and continuing daily for 48 hours. Identify materials containing moisture levels higher than allowed. Report findings in writing to Architect.

c. Remove and replace materials that cannot be completely restored to their manufactured moisture level within 48 hours.

1.19 REMOVAL OF UTILITIES, FACILITIES, AND CONTROLS

A. Remove temporary utilities, equipment, facilities, materials, prior to Date of Substantial Completion inspection.

B. Remove underground installations to a minimum depth of 2 feet.

C. Clean and repair damage caused by installation or use of temporary work.

D. Restore existing facilities used during construction to original condition.

PART 2 PRODUCTS - NOT USED

PART 3 EXECUTION - NOT USED

END OF SECTION

SECTION 016000 - PRODUCT REQUIREMENTS

PART 1 GENERAL

1.1 SECTION INCLUDES

A. General product requirements.
B. Re-use of existing products.
C. Transportation, handling, storage and protection.
D. Product option requirements.
E. Substitution limitations.
F. Procedures for Owner-supplied products.
G. Maintenance materials, including extra materials, spare parts, tools, and software.
H. Equipment electrical characteristics and components.

1.2 RELATED REQUIREMENTS

A. Section 011000 - Summary: Identification of Owner-supplied products.
B. Section 012500 - Substitution Procedures: Substitutions made during procurement and/or construction phases.
C. Section 014000 - Quality Requirements: Product quality monitoring.
D. Section 016116 - Volatile Organic Compound (VOC) Content Restrictions: Requirements for VOC-restricted product categories.
E. Section 017419 - Construction Waste Management and Disposal: Waste disposal requirements potentially affecting product selection, packaging and substitutions.

1.3 DEFINITIONS

A. Day: All days, including calendar day, including weekends and holidays.
B. Business Day: Working day, excluding weekends and legal holidays.
C. Products: Items obtained for incorporating into the Work, whether purchased for Project or taken from previously purchased stock. The term "product" includes the terms "material," "equipment," "system," and terms of similar intent.
    1. Named Products: Items identified by manufacturer's product name, including make or model number or other designation shown or listed in manufacturer's published product literature that is current as of date of the Contract Documents.
    2. New Products: Items that have not previously been incorporated into another project or facility. Salvaged items or items reused from other projects are not considered new products. Items that are manufactured or fabricated to include recycled content materials are considered new products, unless indicated otherwise.
    3. Or Equal Product: Product that is demonstrated and approved through the substitution request process, as specified in Section 012500 - Substitution Procedures, to have the indicated qualities related to type, function, dimension, in-service performance, physical properties, appearance, and other characteristics that equal or exceed those of specified product.
    4. Or Comparable Equal: Term via which an unnamed product is being submitted for consideration as a comparable product. Comply with requirements of this Section. Determination of whether or not the unnamed product meets the definition of comparable product will be made by the Owner and Architect.
    5. Use of a "Or Equal" / "Or Comparable Equal" product shall not result in any delay in completion of the Work, including completion of portions of the Work for use by Owner or for work under separate contract by Owner.
    6. Use of a "Or Equal" / "Or Comparable Equal" provision shall not result in change in Contract Sum and Contract Time. Should additional costs be incurred, including costs for redesign and for fees for plan check review and permit, costs shall be paid by Contractor with no change in Contract Sum and Contract Time.
D. Basis of Design Product Specification: A specification in which a single manufacturer's product is named and accompanied by the words "Basis of Design product," including make or model number or other

designation. Contractor to provide a product and verify with the manufacturer that it meets the attributes and characteristics of basis-of-design product.

E. Subject to Compliance with Requirements: Where the phrase "Subject to compliance with requirements" introduces a product selection procedure in an individual specification section, provide products qualified under the specified product procedure. In the event that a named product or product by a named manufacturer does not meet the other requirements of the specifications, select another named product or product from another named manufacturer that does meet the requirements of the specifications; submit a substitution request, if applicable.

1.4 SUBMITTALS

A. Comparable Product Request Submittal: Submit request for consideration of each comparable product. Identify product or fabrication or installation method to be replaced. Include Specification Section number and title and Drawing numbers and titles.

1. Architect's Action: If necessary, Architect will request additional information or documentation for evaluation within 5 business days of receipt of a comparable product request. Architect will notify Contractor of approval or rejection of proposed comparable product request within 10 business days of receipt of request, or 5 business days of receipt of additional information or documentation, whichever is later.

a. Form of Approval: As specified in Section 012500 - Substitution Procedures.

b. Comparable product requests must be approved in writing by the Owner, Architect, and as applicable Authorities Having Jurisdiction.

c. Use product specified if Architect does not issue a decision on use of a comparable product request within time allocated.

d. Provide specified product if request for comparable product has been rejected.

B. Basis-of-Design Product Specification Submittal: Comply with requirements in Section 013000 - Administrative Requirements. Show compliance with requirements.

1.5 QUALITY ASSURANCE

A. Compatibility of Options: If Contractor is given option of selecting between two or more products for use on Project, select product compatible with products previously selected, even if previously selected products were also options.

1. Resolution of Compatibility Disputes between Multiple Contractors:

a. Contractors are responsible for providing products and construction methods compatible with products and construction methods of other contractors.

b. If a dispute arises between the multiple contractors over concurrently selectable but incompatible products, Architect will determine which products shall be used.

B. Identification of Products: Except for required labels and operating data, do not attach or imprint manufacturer or product names or trademarks on exposed surfaces of products or equipment that will be exposed to view in occupied spaces or on the exterior.

1. Labels: Locate required product labels and stamps on a concealed surface, or, where required for observation following installation, on a visually accessible surface that is not conspicuous.

2. Equipment Nameplates: Provide a permanent nameplate on each item of service- or power-operated equipment. Locate on a visually accessible but inconspicuous surface. Include information essential for operation, including the following:

a. Name of product and manufacturer.

b. Model and serial number.

c. Capacity.

d. Speed.

e. Ratings.

3. See individual identification Sections in Divisions 21, 22, 23, and 26 for additional equipment identification requirements.

1.6 PRODUCT WARRANTIES

A. Warranties specified in other Sections shall be in addition to, and run concurrent with, other warranties required by the Contract Documents. Manufacturer's disclaimers and limitations on product warranties do not relieve Contractor of obligations under requirements of the Contract Documents.

1. Manufacturer's Warranty: Written standard warranty form furnished by individual manufacturer for a particular product and issued in the name of the Owner or endorsed by manufacturer to Owner.
2. Special Warranty: Written warranty required by the Contract Documents to provide specific rights for Owner and issued in the name of the Owner or endorsed by manufacturer to Owner.

B. Special Warranties: Prepare a written document that contains appropriate terms and identification, ready for execution.
1. Manufacturer's Standard Form: Modified to include Project-specific information and properly executed.
2. Specified Form: When specified forms are included in the Project Manual, prepare a written document, using indicated form properly executed.
3. See other sections for specific content requirements and particular requirements for submitting special warranties.

C. Submittal Time: Comply with requirements in Section 017800 - Closeout Submittals.

D. Warranty Period: See individual Specification sections.

E. Warranty Effective Date: Date of Substantial Completion or date of Product acceptance when after Substantial Completion.

PART 2 PRODUCTS

2.1 EXISTING PRODUCTS

A. Unforeseen historic items encountered remain the property of the Owner; notify Owner promptly upon discovery; protect, remove, handle, and store as directed by Owner.

2.2 NEW PRODUCTS

A. Provide new products unless specifically required or permitted by Contract Documents.

B. Use of products having any of the following characteristics is not permitted:

C. Where other criteria are met, Contractor shall give preference to products that:
1. If used on interior, have lower emissions, as defined in Section 016116.
2. If wet-applied, have lower VOC content, as defined in Section 016116.
3. Supply products of each type from single manufacturer unless specified otherwise and regardless of how many subcontractors supply or install the product.
   a. Where appearance attributes may vary between manufacturing lots, supply items from a single lot.
4. Where appearance attributes may vary between manufacturing lots, supply items from a single lot.
5. Supply products complete with accessories, trim, fasteners, and other items needed for installation for indicated use and appearance.
6. Examine products before installation. Do not install damaged products.
7. Do not use materials and equipment removed from existing premises, except as specifically permitted by the Contract Documents.
8. Extra Materials:
   a. Supply extra materials from same manufacturing lots as installed products.
   b. Store extra materials in original packaging with intact labels. Mark packages with locations of installed products.
   c. Store extra materials in building where directed by Owner.

2.3 PRODUCT OPTIONS

A. Products Specified by Reference Standards or by Description Only: Use any product meeting those standards or description.

B. Products Specified by Naming One or More Manufacturers: Use a product of one of the manufacturers named and meeting specifications, no options or substitutions allowed.

C. Products Specified by Naming One or More Manufacturers with a Provision for Substitutions: Submit a request for substitution for any manufacturer not named.

D. Visual Matching Specification: Where specifications require the phrase "match Architect's sample," provide a product that complies with requirements and matches Architect's sample. Architect's decision will be final on whether a proposed product matches.
   1. If no product available within specified category matches and complies with other specified requirements, comply with requirements in Section 012500 - Substitution Procedures for proposal of product.
E. Visual Selection Specification: Where Specifications include the phrase "as selected by Architect from manufacturer's full range" or a similar phrase, select a product that complies with requirements. Architect will select color, gloss, pattern, density, or texture from manufacturer's product line that includes both standard and premium items.

2.4 MAINTENANCE MATERIALS

A. Furnish extra materials, spare parts, tools, and software of types and in quantities specified in individual specification sections.
B. Deliver to Project site; obtain receipt prior to final payment.

2.5 EQUIPMENT ELECTRICAL CHARACTERISTICS AND COMPONENTS

A. Wiring Terminations: Supply terminal lugs to match branch circuit conductor quantities, sizes, and materials indicated. Include lugs for terminal box.
B. Cord and Plug: Supply minimum 6 foot cord and plug with grounding connector for connection to electric wiring system. Cords of longer length are specified in individual specification sections

PART 3 EXECUTION

3.1 SUBSTITUTION LIMITATIONS

A. See Section 012500 - Substitution Procedures.

3.2 OWNER-SUPPLIED PRODUCTS

A. Owner's Responsibilities:
   1. Arrange for and deliver Owner reviewed shop drawings, product data, and samples, to Contractor.
   2. Arrange and pay for product delivery to site.
   3. Notify Contractor of scheduled delivery dates.
   4. On delivery, inspect products jointly with Contractor.
   5. Submit claims for transportation damage and replace damaged, defective, or deficient items.
   6. Arrange for manufacturers' warranties, inspections, and service.
B. Contractor's Responsibilities:
   1. Review Owner reviewed shop drawings, product data, and samples. Notify Architect and Owner of issues that relate to coordination or scheduling.
   2. Designate scheduled delivery dates for Owner-supplied products in construction progress schedule.
   3. Receive and unload products at site; inspect for completeness or damage jointly with Owner.
   4. Handle, store, install and finish products.
   5. Repair or replace items damaged after receipt.

3.3 TRANSPORTATION AND HANDLING

A. Package products for shipment in manner to prevent damage; for equipment, package to avoid loss of factory calibration.
B. If special precautions are required, attach instructions prominently and legibly on outside of packaging.
C. Coordinate schedule of product delivery to designated prepared areas in order to minimize site storage time and potential damage to stored materials.
D. Transport and handle products in accordance with manufacturer's instructions.
E. Deliver in original manufacturer packaging with intact labels and instructions.

F. Transport materials in covered trucks to prevent contamination of product and littering of surrounding areas.
G. Promptly inspect shipments to ensure that products comply with requirements, quantities are correct, and products are undamaged.
H. Provide equipment and personnel to handle products by methods to prevent soiling, disfigurement, or damage, and to minimize handling.
I. Arrange for the return of packing materials, such as wood pallets, where economically feasible.

3.4 STORAGE AND PROTECTION

A. Provide protection of stored materials and products against theft, casualty, or deterioration.
B. Designate receiving/storage areas for incoming products so that they are delivered according to installation schedule and placed convenient to work area in order to minimize waste due to excessive materials handling and misapplication. See Section 017419.
C. Store and protect products in accordance with manufacturers' instructions.
D. Store with seals and labels intact and legible.
E. Arrange storage of materials and products to allow for visual inspection for the purpose of determination of quantities, amounts, and unit counts.
F. Store sensitive products in weathertight, climate-controlled enclosures in an environment favorable to product and per manufacturer recommendations.
G. For exterior storage of fabricated products, place on sloped supports above ground.
H. Provide bonded off-site storage and protection when site does not permit on-site storage or protection.
I. Protect products from damage or deterioration due to construction operations, weather, precipitation, humidity, temperature, sunlight and ultraviolet light, dirt, dust, and other contaminants.
J. Comply with manufacturer's warranty conditions, if any.
K. Do not store products directly on the ground.
L. Cover products subject to deterioration with impervious sheet covering. Provide ventilation to prevent condensation and degradation of products.
M. Store loose granular materials on solid flat surfaces in a well-drained area. Prevent mixing with foreign matter.
N. Prevent contact with material that may cause corrosion, discoloration, or staining.
O. Provide equipment and personnel to store products by methods to prevent soiling, disfigurement, or damage.
P. Arrange storage of products to permit access for inspection. Periodically inspect to verify products are undamaged and are maintained in acceptable condition.

END OF SECTION

SECTION 016116 - VOLATILE ORGANIC COMPOUND (VOC) CONTENT RESTRICTIONS

PART 1 GENERAL

1.1 SECTION INCLUDES

A. Requirements for Indoor-Emissions-Restricted products.
B. Requirements for VOC-Content-Restricted products.

1.2 RELATED REQUIREMENTS

A. Section 013000 - Administrative Requirements: Submittal procedures.
B. Section 014000 - Quality Requirements: Procedures for testing and certifications.
C. Section 016000 - Product Requirements: Fundamental product requirements, substitutions and product options, delivery, storage, and handling.
D. Section 079200 - Joint Sealants: Emissions-compliant sealants.

1.3 DEFINITIONS

A. Indoor-Emissions-Restricted Products: All products in the following product categories, whether specified or not:
   1. Interior paints and coatings applied on site.
   2. Interior adhesives and sealants applied on site, including flooring adhesives.
   3. Flooring.
   4. Composite wood.
   5. Products making up wall and ceiling assemblies.
   6. Thermal and acoustical insulation.
B. VOC-Content-Restricted Products: All products in the following product categories, whether specified or not:
   1. Exterior and interior paints and coatings applied on site.
   2. Interior adhesives and sealants applied on site, including flooring adhesives.
C. Interior of Building: Anywhere inside the exterior weather barrier.
D. Adhesives: All gunnable, trowelable, liquid-applied, and aerosol adhesives, whether specified or not; including flooring adhesives, resilient base adhesives, and pipe jointing adhesives.
E. Sealants: All gunnable, trowelable, and liquid-applied joint sealants and sealant primers, whether specified or not; including firestopping sealants and duct joint sealers.
F. Inherently Non-Emitting Materials: Products composed wholly of minerals or metals, unless they include organic-based surface coatings, binders, or sealants; and specifically the following:
   1. Concrete.
   2. Clay brick.
   3. Metals that are plated, anodized, or powder-coated.
   4. Glass.
   5. Ceramics.
   6. Solid wood flooring that is unfinished and untreated.

1.4 REFERENCE STANDARDS

A. California Green Building Standards Code
B. 40 CFR 59, Subpart D - National Volatile Organic Compound Emission Standards for Architectural Coatings; U.S. Environmental Protection Agency; Current Edition.
C. ASTM D3960 - Standard Practice for Determining Volatile Organic Compound (VOC) Content of Paints and Related Coatings; 2025.
D. CAL (CDPH SM) - Standard Method for the Testing and Evaluation of Volatile Organic Chemical Emissions from Indoor Sources Using Environmental Chambers Version 1.2; 2017.

E. CARB (SCM) - Suggested Control Measure for Architectural Coatings; California Air Resources Board; 2020.
F. SCAQMD 1113 - Architectural Coatings; 1977, with Amendment (2016).
G. SCAQMD 1168 - Adhesive and Sealant Applications; 1989, with Amendment (2022).

1.5 SUBMITTALS

A. See Section 013000 - Administrative Requirements for submittal procedures.
B. Product Data: For each VOC-restricted product used in the project, submit evidence of compliance.

1.6 QUALITY ASSURANCE

A. VOC Content Test Method: 40 CFR 59, Subpart D (EPA Method 24), or ASTM D3960, unless otherwise indicated.
   1. Evidence of Compliance: Acceptable types of evidence are:
      a. Report of laboratory testing performed in accordance with requirements.
B. Testing Agency Qualifications: Independent firm specializing in performing testing and inspections of the type specified in this section.

PART 2 PRODUCTS

2.1 MATERIALS

A. All Products: Comply with the most stringent of federal, State, and local requirements, or these specifications.
B. VOC-Content-Restricted Products: VOC content not greater than required by the following:
   1. Adhesives, Including Flooring Adhesives: SCAQMD 1168 Rule.
   2. Joint Sealants: SCAQMD 1168 Rule.
   3. Paints and Coatings: Each color; most stringent of the following:
      a. 40 CFR 59, Subpart D.
      b. SCAQMD 1113 Rule.
      c. CARB (SCM).

PART 3 EXECUTION

3.1 FIELD QUALITY CONTROL

A. Owner reserves the right to reject non-compliant products, whether installed or not, and require their removal and replacement with compliant products at no extra cost to Owner.
B. Additional costs to restore indoor air quality due to installation of non-compliant products will be borne by Contractor.

END OF SECTION

SECTION 017000 - EXECUTION AND CLOSEOUT REQUIREMENTS

PART 1 GENERAL

1.1 SECTION INCLUDES

A. Examination, preparation, and general installation procedures.
B. Pre-installation meetings.
C. Cutting and patching.
D. Surveying for laying out the work.
E. Cleaning and protection.
F. Starting of systems and equipment.
G. Demonstration and instruction of Owner personnel.
H. Closeout procedures, including Contractor's Correction Punch List, except payment procedures.

1.2 DEFINITIONS

A. Cutting: Removal of in-place construction necessary to permit installation or performance of subsequent work.
B. Patching: Fitting and repair work required to restore construction to original conditions after installation of subsequent work.

1.3 RELATED REQUIREMENTS

A. Section 011000 - Summary: Limitations on working in existing building; continued occupancy; work sequence; identification of salvaged and relocated materials.
B. Section 013000 - Administrative Requirements: Submittals procedures, Electronic document submittal service.
C. Section 014000 - Quality Requirements: Testing and inspection procedures.
D. Section 015000 - Temporary Facilities and Controls: Temporary exterior enclosures.
E. Section 017419 - Construction Waste Management and Disposal: Additional procedures for trash/waste removal, recycling, salvage, and reuse.
F. Section 017800 - Closeout Submittals: Project record documents, operation and maintenance data, warranties, and bonds.
G. Section 017900 - Demonstration and Training: Demonstration of products and systems to be commissioned and where indicated in specific specification sections
H. Section 078400 - Firestopping.

1.4 REFERENCE STANDARDS

A. NFPA 241 - Standard for Safeguarding Construction, Alteration, and Demolition Operations; 2022, with Errata (2021).

1.5 SUBMITTALS

A. See Section 013000 - Administrative Requirements, for submittal procedures.
B. Cutting and Patching: Submit written request in advance of cutting or alteration that affects:
   1. Structural integrity of any element of Project.
   2. Integrity of weather exposed or moisture resistant element.
   3. Efficiency, maintenance, or safety of any operational element.
   4. Visual qualities of sight exposed elements.
   5. Work of Owner or separate Contractor.

1.6 QUALIFICATIONS

A. For surveying work, employ a land surveyor registered in the State in which the Project is located and acceptable to Architect. Submit evidence of surveyor's Errors and Omissions insurance coverage in the

form of an Insurance Certificate. Employ only individual(s) trained and experienced in collecting and recording accurate data relevant to ongoing construction activities,

B. For field engineering, employ a professional engineer of the discipline required for specific service on Project, licensed in the State in which the Project is located. Employ only individual(s) trained and experienced in establishing and maintaining horizontal and vertical control points necessary for laying out construction work on project of similar size, scope and/or complexity.

C. For design of temporary shoring and bracing, employ a Professional Engineer experienced in design of this type of work and licensed in the State in which the Project is located.

1.7 PROJECT CONDITIONS

A. Grade site to drain. Maintain excavations free of water. Provide, operate, and maintain pumping equipment.

B. Protect site from puddling or running water. Provide water barriers as required to protect site from soil erosion.

C. Ventilate enclosed areas to assist cure of materials, to dissipate humidity, and to prevent accumulation of dust, fumes, vapors, or gases.

D. Dust Control: Execute work by methods to minimize raising dust from construction operations. Provide positive means to prevent air-borne dust from dispersing into atmosphere and over adjacent property.

1. Provide dust-proof enclosures to prevent entry of dust generated outdoors.

E. Erosion and Sediment Control: Plan and execute work by methods to control surface drainage from cuts and fills, from borrow and waste disposal areas. Prevent erosion and sedimentation.

F. Noise Control: Provide methods, means, and facilities to minimize noise produced by construction operations.

1. At All Times: Excessively noisy tools and operations will not be tolerated inside the building at any time of day; excessively noisy includes jackhammers.
2. Outdoors: Limit conduct of especially noisy exterior work to the hours of 8 am to 5 pm.
3. Indoors: Limit conduct of especially noisy interior work to 8 am to 5 pm.

G. Pest and Rodent Control: Provide methods, means, and facilities to prevent pests and insects, project will be free of pests and their residues at Substantial Completion.

H. Pollution Control: Provide methods, means, and facilities to prevent contamination of soil, water, and atmosphere from discharge of noxious, toxic substances, and pollutants produced by construction operations. Comply with federal, state, and local regulations.

1.8 COORDINATION

A. Coordinate scheduling, submittals, and work of the various sections of the Project Manual to ensure efficient and orderly sequence of installation of interdependent construction elements, with provisions for accommodating items installed later.

B. Notify affected utility companies and comply with their requirements.

C. Verify that utility requirements and characteristics of new operating equipment are compatible with building utilities. Coordinate work of various sections having interdependent responsibilities for installing, connecting to, and placing in service, such equipment.

D. Coordinate space requirements, supports, and installation of mechanical and electrical work that are indicated diagrammatically on drawings. Follow routing indicated for pipes, ducts, and conduit, as closely as practicable; place runs parallel with lines of building. Utilize spaces efficiently to maximize accessibility for other installations, for maintenance, and for repairs.

E. In finished areas except as otherwise indicated, conceal pipes, ducts, and wiring within the construction. Coordinate locations of fixtures and outlets with finish elements.

F. Coordinate completion and clean-up of work of separate sections.

G. After Owner occupancy of premises, coordinate access to site for correction of defective work and work not in accordance with Contract Documents, to minimize disruption of Owner's activities.

PART 2 PRODUCTS

2.1 PATCHING MATERIALS

A. New Materials: As specified in product sections; match existing products and work for patching and extending work.

B. Type and Quality of Existing Products: Determine by inspecting and testing products where necessary, referring to existing work as a standard.

C. Product Substitution: For any proposed change in materials, submit request for substitution described in Section 016000 - Product Requirements.

2.2 CLEANING MATERIALS

A. Cleaning Agents: Use cleaning materials and agents recommended by manufacturer or fabricator of the surface to be cleaned. Do not use cleaning agents that are potentially hazardous to health or property or that might damage finished surfaces.

1. Use cleaning products that comply with Green Seal's GS-37, or if GS-37 is not applicable, use products that comply with the California Code of Regulations maximum allowable VOC levels.

PART 3 EXECUTION

3.1 EXAMINATION

A. Verify that existing site conditions and substrate surfaces are acceptable for subsequent work. Start of work means acceptance of existing conditions.

B. Verify that existing substrate is capable of structural support or attachment of new work being applied or attached.

C. Examine and verify specific conditions described in individual specification sections.

D. Take field measurements before confirming product orders or beginning fabrication, to minimize waste due to over-ordering or misfabrication.

E. Verify that utility services are available, of the correct characteristics, and in the correct locations.

F. Prior to Cutting: Examine existing conditions prior to commencing work, including elements subject to damage or movement during cutting and patching. After uncovering existing work, assess conditions affecting performance of work. Beginning of cutting or patching means acceptance of existing conditions.

G. Written Report: Where a written report listing conditions detrimental to performance of the Work is required by other Sections, include the following:

1. Description of the Work, including specification section number and paragraph, and drawing sheet number and detail, where applicable.
2. List of detrimental conditions, including substrates.
3. List of unacceptable installation tolerances.
4. Recommended corrections.

H. Proceed with installation only after unsatisfactory conditions have been corrected. Proceeding with the Work indicates acceptance of surfaces and conditions.

3.2 PREPARATION

A. Clean substrate surfaces prior to applying next material or substance.

B. Seal cracks or openings of substrate prior to applying next material or substance.

C. Apply manufacturer required or recommended substrate primer, sealer, or conditioner prior to applying any new material or substance in contact or bond.

D. Existing Utility Information: Furnish information to Owner that is necessary to adjust, move, or relocate existing utility structures, utility poles, lines, services, or other utility appurtenances located in or affected by construction. Coordinate with Authorities Having Jurisdiction.

E. Field Measurements: Take field measurements as required to fit the Work properly. Recheck measurements before installing each product. Where portions of the Work are indicated to fit to other

construction, verify dimensions of other construction by field measurements before fabrication. Coordinate fabrication schedule with construction progress to avoid delaying the Work.

F. Space Requirements: Verify space requirements and dimensions of items shown diagrammatically on Drawings.

G. Review of Contract Documents and Field Conditions: Immediately on discovery of the need for clarification of the Contract Documents, submit a request for information to Architect in accordance with requirements in Section 013000 - Administrative Requirements.

3.3 PREINSTALLATION MEETINGS

A. When required in individual specification sections, convene a preinstallation meeting at the site prior to commencing work of the section.

B. Prior to establishing layout of perimeter and structural column grid(s), review building location requirements. Review benchmark, control point, and layout and dimension requirements. Inform Architect of scheduled meeting. Require representatives of each entity directly concerned with Project layout to attend.

C. Notify Architect 7 days in advance of meeting date.

D. Prepare agenda and preside at meeting:

1. Review conditions of examination, preparation and installation procedures.
2. Review coordination with related work.

E. Record minutes and distribute copies within two days after meeting to participants, with two copies to Architect, Owner, participants, and those affected by decisions made.

3.4 LAYING OUT THE WORK

A. Engage a professional engineer experienced in laying out the Work

B. Verify locations of survey control points prior to starting work.

C. Promptly notify Architect of any discrepancies discovered.

D. Owner will locate and protect survey control and reference points.

E. Protect survey control points prior to starting site work; preserve permanent reference points during construction.

F. Promptly report to Architect the loss or destruction of any reference point or relocation required because of changes in grades or other reasons.

G. Replace dislocated survey control points based on original survey control. Make no changes without prior written notice to Architect.

H. Utilize recognized engineering survey practices.

I. Establish a minimum of two permanent bench marks on site, referenced to established control points. Record locations, with horizontal and vertical data, on project record documents.

J. Establish elevations, lines and levels. Locate and lay out by instrumentation and similar appropriate means:

1. Site improvements including pavements; stakes for grading, fill and topsoil placement; utility locations, slopes, and invert elevations.
2. Grid or axis for structures.
3. Building foundation, column locations, ground floor elevations.

K. Periodically verify layouts by same means.

L. Maintain a complete and accurate log of control and survey work as it progresses.

M. On completion of foundation walls and major site improvements, prepare a certified survey illustrating dimensions, locations, angles, and elevations of construction .

3.5 GENERAL INSTALLATION REQUIREMENTS

A. Install products as specified in individual sections, in accordance with manufacturer's instructions and recommendations, and so as to avoid waste due to necessity for replacement.

B. Make vertical elements plumb and horizontal elements level, unless otherwise indicated.

C. Install equipment and fittings plumb and level, neatly aligned with adjacent vertical and horizontal lines, unless otherwise indicated.

D. Make consistent texture on surfaces, with seamless transitions, unless otherwise indicated.

E. Make neat transitions between different surfaces, maintaining texture and appearance.

F. Conduct construction operations, so no part of the Work is subjected to damaging operations or loading in excess of that expected during normal conditions of occupancy of type expected for Project.

G. Sequence the Work and allow adequate clearances to accommodate movement of construction items on-site and placement in permanent locations.

H. Tools and Equipment: Select tools or equipment that minimize production of excessive noise levels.

I. Templates: Obtain and distribute to the parties involved templates for Work specified to be factory prepared and field installed. Check Shop Drawings of other portions of the Work to confirm that adequate provisions are made for locating and installing products to comply with indicated requirements.

J. Attachment: Provide blocking and attachment plates and anchors and fasteners of adequate size and number to securely anchor each component in place, accurately located and aligned with other portions of the Work. Where size and type of attachments are not indicated, verify size and type required for load conditions with manufacturer.

   1. Mounting Heights: Where mounting heights are not indicated, mount components at heights directed by Architect.
   2. Allow for building movement, including thermal expansion and contraction.
   3. Coordinate installation of anchorages. Furnish setting drawings, templates, and directions for installing anchorages, including sleeves, concrete inserts, anchor bolts, and items with integral anchors, that are to be embedded in concrete or masonry. Deliver such items to Project site in time for installation.

K. Joints: Make joints of uniform width. Where joint locations in exposed Work are not indicated, arrange joints for the best visual effect, as judged by Architect. Fit exposed connections together to form hairline joints.

3.6 COORDINATION OF OWNER'S PORTION OF THE WORK

A. Site Access: Provide access to Project site for Owner's construction personnel.

   1. Provide temporary facilities required for Owner-furnished, Owner-installed products.
   2. Refer to Section 011000 - Summary for other requirements for Owner-furnished, Owner-installed products.

B. Coordination: Coordinate construction and operations of the Work with work performed by Owner's construction personnel.

   1. Construction Schedule: Inform Owner of Contractor's preferred construction schedule for Owner's portion of the Work. Adjust construction schedule based on a mutually agreeable timetable. Notify Owner if changes to schedule are required due to differences in actual construction progress.
   2. Preinstallation Conferences: Include Owner's construction personnel at preinstallation conferences covering portions of the Work that are to receive Owner's work. Attend preinstallation conferences conducted by Owner's construction personnel if portions of the Work depend on Owner's construction.

3.7 CUTTING AND PATCHING

A. Whenever possible, execute the work by methods that avoid cutting or patching.

B. Perform whatever cutting and patching is necessary to:

   1. Complete the work.
   2. Fit products together to integrate with other work.
   3. Provide openings for penetration of mechanical, electrical, and other services.
   4. Match work that has been cut to adjacent work.
   5. Repair areas adjacent to cuts to required condition.
   6. Repair new work damaged by subsequent work.
   7. Remove samples of installed work for testing when requested.
   8. Remove and replace defective and non-complying work.

C. Before cutting, examine existing conditions, including elements subject to damage or movement during cutting and patching.

D. Execute work by methods that avoid damage to other work and that will provide appropriate surfaces to receive patching and finishing. In existing work, minimize damage and restore to original condition.

E. Employ skilled and experienced installer to perform cutting for weather exposed and moisture resistant elements, and sight exposed surfaces.

F. Cut rigid materials using masonry saw or core drill. Pneumatic tools not allowed without prior approval by Owner and Architect.

G. Restore work with new products in accordance with requirements of Contract Documents.

H. Fit work air tight to pipes, sleeves, ducts, conduit, and other penetrations through surfaces.

I. At penetrations of fire rated walls, partitions, ceiling, or floor construction, completely seal voids with fire rated material in accordance with Section 078400, to full thickness of the penetrated element.

J. Patching:

1. Finish patched surfaces to match finish that existed prior to patching. On continuous surfaces, refinish to nearest intersection or natural break. For an assembly, refinish entire unit.
2. Match color, texture, and appearance.
3. Repair patched surfaces that are damaged, lifted, discolored, or showing other imperfections due to patching work. If defects are due to condition of substrate, repair substrate prior to repairing finish.

3.8 PROGRESS CLEANING

A. Maintain areas free of waste materials, debris, and rubbish. Maintain site in a clean and orderly condition.

1. Comply with requirements in NFPA 241 for removal of combustible waste materials and debris.
2. Do not hold waste materials more than seven days during normal weather or three days if the temperature is expected to rise above 80 degrees F.
3. Containerize hazardous and unsanitary waste materials separately from other waste. Mark containers appropriately and dispose of legally, in accordance with regulations.
   a. Use containers intended for holding waste materials of type to be stored.
4. Coordinate progress cleaning for joint-use areas where Contractor and other contractors are working concurrently.

B. Remove debris and rubbish from pipe chases, plenums, attics, crawl spaces, and other closed or remote spaces, prior to enclosing the space.

C. Broom and vacuum clean interior areas prior to start of surface finishing, and continue cleaning to eliminate dust.

D. Collect and remove waste materials, debris, and trash/rubbish from site periodically and dispose off-site; do not burn or bury.

E. Limiting Exposures: Supervise construction operations to ensure that no part of the construction, completed or in progress, is subject to harmful, dangerous, damaging, or otherwise deleterious exposure during the construction period.

3.9 PROTECTION OF INSTALLED WORK

A. Protect installed work from damage by construction operations.

B. Provide special protection where specified in individual specification sections.

C. Provide temporary and removable protection for installed products. Control activity in immediate work area to prevent damage.

1. Water resistant.
2. Vapor permeable.
3. Impact resistant.
4. Slip resistant.
5. Flame retardant.

D. Provide protective coverings at walls, projections, jambs, sills, and soffits of openings.

E. Protect finished floors, stairs, and other surfaces from traffic, dirt, wear, damage, or movement of heavy objects, by protecting with durable sheet materials.

F. Protect work from spilled liquids. If work is exposed to spilled liquids, immediately remove protective coverings, dry out work, and replace protective coverings.

G. Prohibit traffic from landscaped areas.

H. Remove protective coverings when no longer needed; reuse or recycle coverings if possible.

3.10 SYSTEM STARTUP

A. Coordinate schedule for start-up of various equipment and systems. Refer to Divisions 22, 23 and 26 for additional requirements.
B. Notify Architect and Owner seven days prior to start-up of each item.
C. Verify that each piece of equipment or system has been checked for proper lubrication, drive rotation, belt tension, control sequence, and for conditions that may cause damage.
D. Verify tests, meter readings, and specified electrical characteristics agree with those required by the equipment or system manufacturer.
E. Verify that wiring and support components for equipment are complete and tested.
F. Execute start-up under supervision of applicable Contractor personnel, Owner's commissioning agent, and manufacturer's representative in accordance with manufacturers' instructions.
G. Submit a report that equipment or system has been properly installed and is functioning correctly, as required in Section 014000 - Quality Requirements.

3.11 DEMONSTRATION AND INSTRUCTION

A. See Section 017900 - Demonstration and Training.

3.12 TESTING, ADJUSTING AND BALANCING

A. Owner will employ and pay for services of independent firm to perform testing, adjusting, and balancing.
B. Adjust operating products and equipment to ensure smooth and unhindered operation.
C. Reports will be submitted by independent firm to Architect and Owner indicating observations and results of tests and indicating compliance or non-compliance with requirements of Contract Documents.
D. Refer to Divison 23 for additional HVAC system requirements.

3.13 FINAL CLEANING

A. Execute final cleaning prior to Substantial Completion.
B. Use cleaning materials that are nonhazardous.
C. Clean interior and exterior glass, surfaces exposed to view; remove temporary labels, stains and foreign substances, polish transparent and glossy surfaces, vacuum carpeted and soft surfaces.
D. Remove all labels that are not permanent. Do not paint or otherwise cover fire test labels or nameplates on mechanical and electrical equipment.
E. Clean equipment and fixtures to a sanitary condition with cleaning materials appropriate to the surface and material being cleaned.
F. Clean permanent or replace disposable filters of operating equipment.
G. Clean debris from roofs, gutters, downspouts, scuppers, overflow drains, area drains, and drainage systems.
H. Clean site; sweep paved areas, rake clean landscaped surfaces.
I. Remove waste, surplus materials, trash/rubbish, and construction facilities from the site; dispose of in legal manner; do not burn or bury.

3.14 CLOSEOUT PROCEDURES

A. Make submittals that are required by governing or other authorities.
   1. Provide copies to Architect and Owner.
B. Submit written certification containing Contractor's Correction Punch List, that Contract Documents have been reviewed, work has been inspected, and that work is complete in accordance with Contract Documents and ready for Architect's Substantial Completion inspection.
   1. If Architect performs reinspection due to failure of Work to comply with claims of status of completion made by Contractor, Owner will compensate Architect for such additional services and will deduct the amount of such compensation from final payment to Contractor.
C. Conduct Substantial Completion inspection and create Final Correction Punch List containing Architect's and Contractor's comprehensive list of items identified to be completed or corrected and submit to Architect.

D. Submittals and Procedures Prior to Substantial Completion: Complete the following a minimum of 10 business days prior to requesting observation for determining date of Substantial Completion. List items below that are incomplete at time of request.
   1. Certificates of Release: Obtain and submit releases from authorities having jurisdiction, permitting Owner unrestricted use of the Work and access to services and utilities. Include occupancy permits, operating certificates, and similar releases.
   2. Submit closeout submittals specified in other Division 01 sections, including project record documents, operation and maintenance manuals, damage or settlement surveys, property surveys, and similar final record information.
   3. Submit closeout submittals specified in individual sections, including specific warranties, workmanship bonds, maintenance service agreements, final certifications, and similar documents.
   4. Submit maintenance material submittals specified in individual sections, including tools, spare parts, extra materials, and similar items, and deliver to location designated by Owner. Label with manufacturer's name and model number.
      a. Schedule of Maintenance Material Items: Prepare and submit schedule of maintenance material submittal items, including name and quantity of each item and name and number of related specification section. Obtain Owner's signature for receipt of submittals.
   5. Submit testing, adjusting, and balancing records.
   6. Submit sustainable design submittals not previously submitted.
   7. Submit changeover information related to Owner's occupancy, use, operation, and maintenance.
   8. Advise Owner of pending insurance changeover requirements.
   9. Make final changeover of permanent locks and deliver keys to Owner. Advise Owner's personnel of changeover in security provisions.
   10. Complete startup and testing of systems and equipment.
   11. Perform preventive maintenance on equipment used prior to Substantial Completion.
   12. Instruct Owner's personnel in operation, adjustment, and maintenance of products, equipment, and systems. Submit demonstration and training video recordings specified in Section 017900 - Demonstration and Training.
   13. Advise Owner of changeover in utility services.
   14. Participate with Owner in conducting observation and walkthrough with local emergency responders.
   15. Terminate and remove temporary facilities from Project site, along with mock-ups, construction tools, and similar elements.
   16. Complete final cleaning requirements.
   17. Touch up paint and otherwise repair and restore marred exposed finishes to eliminate visual defects.
E. Correct items of work listed in Final Correction Punch List and comply with requirements for access to Owner-occupied areas.
F. Notify Architect when work is considered finally complete and ready for Architect's Substantial Completion final inspection.
   1. Submit a final Application for Payment in accordance with Section 012000 - Price and Payment Procedures.
   2. Certified List of Incomplete Items: Submit certified copy of Architect's Substantial Completion observation list of items to be completed or corrected (punch list), endorsed and dated by Architect. Certified copy of the list will state that each item has been completed or otherwise resolved for acceptance.
   3. Certificate of Insurance: Submit evidence of final, continuing insurance coverage complying with insurance requirements.
   4. Submit pest-control final inspection report.
   5. Submit Final Completion photographic documentation.
G. Complete items of work determined by Architect listed in executed Certificate of Substantial Completion.
H. Refer to Section 017800 - Closeout Submittals for additional and requirements.

END OF SECTION

SECTION 017419 - CONSTRUCTION WASTE MANAGEMENT AND DISPOSAL

PART 1 GENERAL

1.1 WASTE MANAGEMENT REQUIREMENTS

A. Owner requires that this project generate the least amount of trash and waste possible.
B. Employ processes that ensure the generation of as little waste as possible due to error, poor planning, breakage, mishandling, contamination, or other factors.
C. Minimize trash/waste disposal in landfills; reuse, salvage, or recycle as much waste as economically feasible.
D. Contractor Reporting Responsibilities: Submit periodic Waste Disposal Reports; report landfill disposal, incineration, recycling, salvage, and reuse regardless of to whom the cost or savings accrues; use the same units of measure on required reports.
E. Methods of trash/waste disposal that are not acceptable are:
   1. Burning on the project site.
   2. Burying on the project site.
   3. Dumping or burying on other property, public or private.
   4. Other illegal dumping or burying.
F. Regulatory Requirements: Contractor is responsible for knowing and complying with regulatory requirements, including but not limited to Federal, state and local requirements, pertaining to legal disposal of all construction and demolition waste materials.

1.2 RELATED REQUIREMENTS

A. Section 013000 - Administrative Requirements: Additional requirements for project meetings, reports, submittal procedures, and project documentation.
B. Section 015000 - Temporary Facilities and Controls: Additional requirements related to trash/waste collection and removal facilities and services.
C. Section 016000 - Product Requirements: Waste prevention requirements related to delivery, storage, and handling.
D. Section 017000 - Execution and Closeout Requirements: Trash/waste prevention procedures related to demolition, cutting and patching, installation, protection, and cleaning.
E. Section 018114 - Sustainable Design Requirements - CALGreen: for additional sustainable requirements.

1.3 DEFINITIONS

A. Clean: Untreated and unpainted; not contaminated with oils, solvents, caulk, or the like.
B. Construction and Demolition Waste: Solid wastes typically including building materials, packaging, trash, debris, and rubble resulting from construction, remodeling, repair and demolition operations.
C. Hazardous: Exhibiting the characteristics of hazardous substances, i.e., ignitibility, corrosivity, toxicity or reactivity.
D. Nonhazardous: Exhibiting none of the characteristics of hazardous substances, i.e., ignitibility, corrosivity, toxicity, or reactivity.
E. Nontoxic: Neither immediately poisonous to humans nor poisonous after a long period of exposure.
F. Recyclable: The ability of a product or material to be recovered at the end of its life cycle and remanufactured into a new product for reuse by others.
G. Recycle: To remove a waste material from the project site to another site for remanufacture into a new product for reuse by others.
H. Recycling: The process of sorting, cleansing, treating and reconstituting solid waste and other discarded materials for the purpose of using the altered form. Recycling does not include burning, incinerating, or thermally destroying waste.
I. Return: To give back reusable items or unused products to vendors for credit.
J. Reuse: To reuse a construction waste material in some manner on the project site.
K. Salvage: To remove a waste material from the project site to another site for resale or reuse by others.

L. Sediment: Soil and other debris that has been eroded and transported by storm or well production run-off water.

M. Source Separation: The act of keeping different types of waste materials separate beginning from the first time they become waste.

N. Toxic: Poisonous to humans either immediately or after a long period of exposure.

O. Trash: Any product or material unable to be reused, returned, recycled, or salvaged.

P. Waste: Extra material or material that has reached the end of its useful life in its intended use. Waste includes salvageable, returnable, recyclable, and reusable material.

1.4 SUBMITTALS

A. See Section 013000 - Administrative Requirements for submittal procedures.

B. Submit Waste Management Plan within 10 calendar days after receipt of Notice of Award of Bid, or prior to any trash or waste removal, whichever occurs sooner; submit projection of all trash and waste that will require disposal and alternatives to landfilling.

C. Waste Disposal Reports: Submit at specified intervals, with details of quantities of trash and waste, means of disposal or reuse, and costs; show both totals to date and since last report.

1. Submit updated Report with each Application for Progress Payment; failure to submit Report will delay payment.
2. Submit Report on a form acceptable to Owner.
3. Landfill Disposal: Include the following information:
   a. Identification of material.
   b. Amount, in tons or cubic yards, of trash/waste material from the project disposed of in landfills.
   c. State the identity of landfills, total amount of tipping fees paid to landfill, and total disposal cost.
   d. Include manifests, weight tickets, receipts, and invoices as evidence of quantity and cost.
4. Incinerator Disposal: Include the following information:
   a. Identification of material.
   b. Amount, in tons or cubic yards, of trash/waste material from the project delivered to incinerators.
   c. State the identity of incinerators, total amount of fees paid to incinerator, and total disposal cost.
   d. Include manifests, weight tickets, receipts, and invoices as evidence of quantity and cost.
5. Recycled and Salvaged Materials: Include the following information for each:
   a. Identification of material, including those retrieved by installer for use on other projects.
   b. Amount, in tons or cubic yards, date removed from the project site, and receiving party.
   c. Transportation cost, amount paid or received for the material, and the net total cost or savings of salvage or recycling each material.
   d. Include manifests, weight tickets, receipts, and invoices as evidence of quantity and cost.
   e. Certification by receiving party that materials will not be disposed of in landfills or by incineration.
6. Material Reused on Project: Include the following information for each:
   a. Identification of material and how it was used in the project.
   b. Amount, in tons or cubic yards.
   c. Include weight tickets as evidence of quantity.
7. Other Disposal Methods: Include information similar to that described above, as appropriate to disposal method.

PART 2 PRODUCTS

2.1 PERFORMANCE REQUIREMENTS

A. General: Recycle and/or salvage for reuse a minimum 65 percent of the nonhazardous construction and demolition waste in accordance with CALGreen Sections 5.408.1.1, 5.408.1.2, or 5.408.1.3, or meet a

local construction and demolition waste management ordinance, whichever is more stringent. Practice efficient waste management in the use of materials in the course of the Work. Use all reasonable means to divert construction and demolition waste from landfills and incinerators. Facilitate recycling and salvage of materials, including the following: CALGreen 5.408.1.

1. Demolition Waste:
    a. Asphalt paving.
    b. Concrete.
    c. Concrete reinforcing steel.
    d. Brick.
    e. Concrete masonry units.
    f. Wood studs.
    g. Wood joists.
    h. Plywood and oriented strand board.
    i. Wood paneling.
    j. Wood trim.
    k. Structural and miscellaneous steel.
    l. Rough hardware.
    m. Roofing.
    n. Insulation.
    o. Doors and frames.
    p. Door hardware.
    q. Windows.
    r. Glazing.
    s. Metal studs.
    t. Gypsum board.
    u. Acoustical tile and panels.
    v. Carpet.
    w. Carpet pad.
    x. Demountable partitions.
    y. Equipment.
    z. Cabinets.
    aa. Plumbing fixtures.
    bb. Piping.
    cc. Supports and hangers.
    dd. Valves.
    ee. Sprinklers.
    ff. Mechanical equipment.
    gg. Refrigerants.
    hh. Electrical conduit.
    ii. Copper wiring.
    jj. Lighting fixtures.
    kk. Lamps.
    ll. Ballasts.
    mm. Electrical devices.
    nn. Switchgear and panelboards.
    oo. Transformers.
2. Construction Waste:
    a. Masonry and CMU.
    b. Lumber.
    c. Wood sheet materials.
    d. Wood trim.
    e. Metals.
    f. Roofing.

g. Insulation.
h. Carpet and pad.
i. Gypsum board.
j. Piping.
k. Electrical conduit.
l. Packaging: Regardless of salvage/recycle goal indicated in "General" Paragraph above, salvage or recycle 100 percent of the following uncontaminated packaging materials:
    1) Paper.
    2) Cardboard.
    3) Boxes.
    4) Plastic sheet and film.
    5) Polystyrene packaging.
    6) Wood crates.
    7) Wood pallets.
    8) Plastic pails.
m. Construction Office Waste: Regardless of salvage/recycle goal indicated in "General" Paragraph above, salvage or recycle 100 percent of the following construction office waste materials:
    1) Paper.
    2) Aluminum cans.
    3) Glass containers.

PART 3 EXECUTION

3.1 WASTE MANAGEMENT PROCEDURES

A. See Section 013000 for additional requirements for project meetings, reports, submittal procedures, and project documentation.
B. See Section 015000 for additional requirements related to trash/waste collection and removal facilities and services.
C. See Section 016000 for waste prevention requirements related to delivery, storage, and handling.
D. See Section 017000 for trash/waste prevention procedures related to demolition, cutting and patching, installation, protection, and cleaning.

3.2 WASTE MANAGEMENT PLAN IMPLEMENTATION

A. Manager: Designate an on-site person or persons responsible for instructing workers and overseeing and documenting results of the Waste Management Plan.
B. Waste Management Company: Utilize a waste management company that can provide verifiable documentation that the percentage of construction waste material diverted from the landfill complies with CALGreen.
C. Communication: Distribute copies of the Waste Management Plan to job site foreman, each subcontractor, Owner, and Architect.
D. Instruction: Provide on-site instruction of appropriate separation, handling, and recycling, salvage, reuse, and return methods to be used by all parties at the appropriate stages of the project.
E. Meetings: Discuss trash/waste management goals and issues at project meetings.
    1. Prebid meeting.
    2. Preconstruction meeting.
    3. Regular job-site meetings.
F. Facilities: Provide specific facilities for separation and storage of materials for recycling, salvage, reuse, return, and trash disposal, for use by all contractors and installers.
    1. Provide containers as required.
    2. Provide adequate space for pick-up and delivery and convenience to subcontractors.
    3. Keep recycling and trash/waste bin areas neat and clean and clearly marked in order to avoid contamination of materials.

G. Hazardous Wastes: Separate, store, and dispose of hazardous wastes according to applicable regulations.

H. Recycling: Separate, store, protect, and handle at the site identified recyclable waste products in order to prevent contamination of materials and to maximize recyclability of identified materials. Arrange for timely pickups from the site or deliveries to recycling facility in order to prevent contamination of recyclable materials.

I. Reuse of Materials On-Site: Set aside, sort, and protect separated products in preparation for reuse.

J. Salvage: Set aside, sort, and protect products to be salvaged for reuse off-site.

END OF SECTION

Construction Waste Management (CWM) Plan

Project Name: _____

Job #: _____

Project Manager: _____

Waste Hauling Company: _____

Contact Name: _____

All Subcontractors shall comply with the project's Construction Waste Management Plan.

All Subcontractor foremen shall sign the CWM Plan Acknowledgment Sheet, attached.

Subcontractors who fail to comply with the Waste Management Plan will be subject to backcharges or withholding of payment, as deemed appropriate. For instance, Subcontractors who contaminate debris boxes that have been designated for a single material type will be subject to backcharge or withheld payment, as deemed appropriate.

1. The project's overall rate of waste diversion will be ____ %.
2. This project shall generate the least amount of waste possible by planning and ordering carefully, following all proper storage and handling procedures to reduce broken and damaged materials and reusing materials whenever possible. The majority of the waste that is generated on this jobsite will be diverted from the landfill and recycled for other use.
3. Spreadsheet 1, attached, identifies the waste materials that will be generated on this project, the diversion strategy for each waste type and the anticipated diversion rate.
4. Waste prevention and recycling activities will be discussed at the beginning of weekly subcontractor meetings. As each new subcontractor comes on-site, the WMP Coordinator will present him/her with a copy of the CWM Plan and provide a tour of the jobsite to identify materials to be salvaged and the procedures for handling jobsite debris. All Subcontractor foremen will acknowledge in writing that they have read and will abide by the CWM Plan. Subcontractor Acknowledgment Sheet enclosed. The CWM Plan will be posted at the jobsite trailer.
5. Salvage: Excess materials that cannot be used in the project, nor returned to the vendor, will be offered to site workers, the owner or donated to charity if feasible.
6. [_____ (hauling company)] will provide a commingled drop box at the jobsite for most of the construction waste. These commingled drop boxes will be taken to [_____]. The average diversion rate for commingled waste will be ____%. As site conditions permit, additional drop boxes will be used for particular phases of construction (e.g., concrete and wood waste) to ensure the highest waste diversion rate possible.
7. In the event that the waste diversion rate achievable via the strategy described in (6) above, is projected to be lower than what is required, then a strategy of source-separated waste diversion and/or waste stream reduction will be implemented. Source separated waste refers to jobsite waste that is not commingled but is instead allocated to a debris box designated for a single material type, such as clean wood or metal.

   Notes:

   1. Waste stream reduction refers to e orts taken by the builder to reduce the amount of waste generated by the project to below four (4) pounds per square foot of building area.
   2. When using waste stream reduction measures, the gross weight of the product is subtracted from a base weight of four (4) pounds per square foot of building area. This reduction is considered additional diversion and can be used in the waste reduction percentage calculations.

8. [_____(hauling company)] will track and calculate the quantity (in tons) of all waste leaving the project and calculate the waste diversion rate for the project. [_____(hauling company)] will provide Project Manager with an updated monthly report on gross weight hauled and the waste diversion rate being achieved on the project. [_____(hauling company's)] monthly report will track separately the gross weights and diversion rates for commingled debris and for each source-separated waste stream leaving the project. In the event that [_____(hauling company)] does not service any or all of the debris boxes on the project, the [_____(hauling company)] will work with the responsible parties to track the material type and weight (in tons) in such debris boxes in order to determine waste diversion rates for these materials.
9. In the event that Subcontractors furnish their own debris boxes as part of their scope of work, such Subcontractors shall not be excluded from complying with the CWM Plan and will provide [_____(hauling company)] weight and waste diversion data for their debris boxes.

10. In the event that site use constraints (such as limited space) restrict the number of debris boxes that can be used for collection of designated waste the project Superintendent will, as deemed appropriate, allocate specific areas onsite where individual material types are to be consolidated. These collection points are not to be contaminated with non-designated waste types.
11. Debris from jobsite office and meeting rooms will be collected by [_____ (disposal service company)]. [_____ (disposal service company)] will, at a minimum, recycle office paper, plastic, metal and cardboard.

Construction Waste Management (CWM) Worksheet

Project Name:
_____

Job Number:
_____

Project Manager:
_____

Waste Hauling Company:
_____

Construction Waste Management (CWM) Plan

WASTE MATERIAL TYPE	DIVERSION METHOD:		PROJECTED DIVERSION RATE
	COMMINGLED AND SORTED OFF SITE	SOURCE SEPARATED ON SITE	
Asphalt			
Concrete			
Shotcrete			
Metals			
Wood			
Rigid insulation			
Fiberglass insulation			
Acoustic ceiling tile			
Gypsum drywall			
Carpet/carpet pad			
Plastic pipe			
Plastic buckets			
Plastic			
Hardiplank siding and boards			
Glass			
Cardboard			
Pallets			
Job office trash, paper, glass & plastic bottles, cans, plastic			
Alkaline and rechargeable batteries, toner cartridges and electronic devices			

Other:			
Other:			

Construction Waste Management (CWM) Acknowledgment

Project Name: _____
Job Number: _____
Project Manager:_____
Waste Hauling Company: _____

CWM Plan Acknowledgment

The Foreman for each new Subcontractor that comes on site is to receive a copy of the Construction Waste Management Plan and complete this Acknowledgment Form.
I have read the Waste Management Plan for the project; I understand the goals of this plan and agree to follow the procedures described in this plan.

DATE	SUBCONTRACTOR COMPANY NAME	FOREMAN NAME	SIGNATURE

SECTION 017800 - CLOSEOUT SUBMITTALS

PART 1 GENERAL

1.1 SECTION INCLUDES

A. Project record documents.
B. Emergency manual.
C. Operation and maintenance manual.
D. Materials transparency and maintenance manual.
E. Warranties and bonds.

1.2 RELATED REQUIREMENTS

A. Section 013000 - Administrative Requirements: Submittals procedures, shop drawings, product data, and samples.
B. Section 017000 - Execution and Closeout Requirements: Contract closeout procedures.
C. Individual Product Sections: Specific requirements for operation and maintenance data.
D. Individual Product Sections: Warranties required for specific products or Work.

1.3 SUBMITTALS

A. Evidence of compliance with requirements of Governing authorities.
B. Certification of Occupancy.
C. Project Record Documents: Submit documents to Architect with claim for final Application for Payment.
D. Emergency, Operation and Maintenance Data:
    1. For equipment, or component parts of equipment put into service during construction and operated by Owner, submit completed documents within ten days after acceptance.
    2. Submit printed and a PDF format files of completed document, on a USB drive, 30 days prior to final inspection. This copy will be reviewed and revision comments issued by Owner and Architect after final inspection. Revise content as required prior to final submission.
        a. Arrange files by system and subsystem with bookmarks.
        b. Include drawing files appropriate to content.
    3. Submit printed and a PDF format files of revised final documents, on a USB drive, in final form within 15 days after final inspection.
E. Materials Transparency Manual:
    1. Compile and submit a digital and a printed version of information disclosing materials content for interior finishes, furnishings (including workstations), built-in furniture. Meet IWBI (BS) requirements for format and content.
F. Warranties and Bonds:
    1. For equipment or component parts of equipment put into service during construction with Owner's permission, submit documents within 10 days after acceptance.
    2. Make other submittals within 10 days after Date of Substantial Completion, prior to final Application for Payment.
    3. For items of Work for which acceptance is delayed beyond Date of Substantial Completion, submit within 10 days after acceptance, listing the date of acceptance as the beginning of the warranty period.
G. Keys and keying schedule.
H. Spare parts and maintenance materials
I. Evidence of payment of Subcontractors and suppliers.
J. Final lien waiver.
K. Certificate of insurance for products and completed operations.
L. Consent of Surety to final payment.

PART 2 PRODUCTS - NOT USED

PART 3 EXECUTION

3.1 PROJECT RECORD DOCUMENTS

A. Maintain on site one set of the following record documents; record actual revisions to the Work:
   1. Drawings.
   2. Specifications.
   3. Addenda.
   4. Change Orders and other modifications to the Contract.
   5. Reviewed shop drawings, product data, and samples.
B. Ensure entries are complete and accurate, enabling future reference by Owner.
C. Store record documents separate from documents used for construction.
D. Record information concurrent with construction progress.
E. Specifications: Legibly mark and record at each product section description of actual products installed, including the following:
   1. Manufacturer's name and product model and number.
   2. Product substitutions or alternates utilized.
   3. Changes made by Addenda and modifications.
   4. Format: Submit record specifications as annotated PDF electronic file.
F. Record Drawings and Shop Drawings: Legibly mark each item to record actual construction including:
   1. Measured depths of foundations in relation to finish first floor datum.
   2. Measured horizontal and vertical locations of underground utilities and appurtenances, referenced to permanent surface improvements.
   3. Measured locations of internal utilities and appurtenances concealed in construction, referenced to visible and accessible features of the Work.
   4. Field changes of dimension and detail.
   5. Details not on original Contract drawings.
   6. Format: Submit construction record drawings as scanned PDF electronic files(s) of marked-up paper copy of drawings.

3.2 EMERGENCY, OPERATION, AND MAINTENANCE DATA

A. Operation and Maintenance Documentation Directory: Prepare a separate manual that provides an organized reference to emergency, operation, and maintenance manuals. List items and their location to facilitate ready access to desired information. Include the following:
   1. List of Systems and Subsystems: List systems alphabetically. Include references to operation and maintenance manuals that contain information about each system.
   2. List of Equipment: List equipment for each system, organized alphabetically by system. For pieces of equipment not part of system, list alphabetically in separate list.
   3. Tables of Contents: Include a table of contents for each emergency, operation, and maintenance manual.
B. Source Data: For each product or system, list names, addresses and telephone numbers of Subcontractors and suppliers, including local source of supplies and replacement parts.
C. Product Data: Mark each sheet to clearly identify specific products and component parts, and data applicable to installation. Delete inapplicable information.
D. Drawings: Supplement product data to illustrate relations of component parts of equipment and systems, to show control and flow diagrams. Do not use Project Record Documents as maintenance drawings.
E. Typed Text: As required to supplement product data. Provide logical sequence of instructions for each procedure, incorporating manufacturer's instructions.

3.3 MANUAL FOR EMERGENCY

A. Emergency Manual: Assemble a complete set of emergency information indicating procedures for use by emergency personnel and by Owner's operating personnel for types of emergencies indicated.
B. Content: Organize manual into a separate section for each of the following:
   1. Type of emergency.
   2. Emergency instructions.
   3. Emergency procedures.
C. Type of Emergency: Where applicable for each type of emergency indicated below, include instructions and procedures for each system, subsystem, piece of equipment, and component:
   1. Fire.
   2. Flood.
   3. Gas leak.
   4. Water leak.
   5. Power failure.
   6. Water outage.
   7. System, subsystem, or equipment failure.
   8. Chemical release or spill.
D. Emergency Instructions: Describe and explain warnings, trouble indications, error messages, and similar codes and signals. Include responsibilities of Owner's operating personnel for notification of Installer, supplier, and manufacturer to maintain warranties.
E. Emergency Procedures: Include the following, as applicable:
   1. Instructions on stopping.
   2. Shutdown instructions for each type of emergency.
   3. Operating instructions for conditions outside normal operating limits.
   4. Required sequences for electric or electronic systems.
   5. Special operating instructions and procedures.

3.4 MANUAL FOR MATERIALS AND FINISHES MAINTENANCE

A. Source Information: List each product included in manual, identified by product name and arranged to match manual's table of contents. For each product, list name, address, and telephone number of Installer or supplier and maintenance service agent, and cross-reference Specification Section number and title in Project Manual and drawing or schedule designation or identifier where applicable.
B. For Each Product, Applied Material, and Finish:
   1. Product data, with catalog number, size, composition, and color and texture designations.
   2. Information for re-ordering custom manufactured products.
C. Instructions for Care and Maintenance: Manufacturer's recommendations for cleaning agents and methods, precautions against detrimental cleaning agents and methods, and recommended schedule for cleaning and maintenance.
D. Moisture protection and weather-exposed products: Include product data listing applicable reference standards, chemical composition, and details of installation. Provide recommendations for inspections, maintenance, and repair.
E. Additional information as specified in individual product specification sections.
F. Where additional instructions are required, beyond the manufacturer's standard printed instructions, have instructions prepared by personnel experienced in the operation and maintenance of the specific products.

3.5 MANUAL FOR SYSTEMS AND EQUIPMENT OPERATION AND MAINTENANCE

A. Source Information: List each system, subsystem, and piece of equipment included in manual, identified by product name and arranged to match manual's table of contents. For each product, list name, address, and telephone number of Installer or supplier and maintenance service agent, and cross-reference Specification Section number and title in Project Manual and drawing or schedule designation or identifier where applicable
B. For Each Item of Equipment and Each System:
   1. Description of unit or system, and component parts.

2. Identify function, normal operating characteristics, and limiting conditions.
3. Include performance curves, with engineering data and tests.
4. Complete nomenclature and model number of replaceable parts.

C. Where additional instructions are required, beyond the manufacturer's standard printed instructions, have instructions prepared by factory-authorized service representatives experienced in the operation and maintenance of the specific products.

D. Panelboard Circuit Directories: Provide electrical service characteristics, controls, and communications; typed.

E. Include color coded wiring diagrams as installed.

F. Operating Procedures: Include start-up, break-in, and routine normal operating instructions and sequences. Include regulation, control, stopping, shut-down, and emergency instructions. Include summer, winter, and any special operating instructions.

G. Maintenance Requirements: Include routine procedures and guide for preventative maintenance and trouble shooting; disassembly, repair, and reassembly instructions; and alignment, adjusting, balancing, and checking instructions.
1. Include HVAC outdoor and exhaust air damper calibration strategy.
a. Include provisions which ensure that full closure of dampers can be achieved.

H. Provide servicing and lubrication schedule, and list of lubricants required.
1. Scheduled Maintenance and Service: Tabulate actions for daily, weekly, monthly, quarterly, semiannual, and annual frequencies.
2. Maintenance and Service Record: Include manufacturers' forms for recording maintenance.

I. Include manufacturer's printed operation and maintenance instructions.
1. Test and inspection instructions.
2. Troubleshooting guide.
3. Precautions against improper maintenance.
4. Disassembly; component removal, repair, and replacement; and reassembly instructions.
5. Aligning, adjusting, and checking instructions.
6. Demonstration and training video recording, if available.

J. Include sequence of operation by controls manufacturer.

K. Provide original manufacturer's parts list, illustrations, assembly drawings, and diagrams required for maintenance.

L. Provide Contractor's coordination drawings, with color coded piping diagrams as installed.

M. Provide charts of valve tag numbers, with location and function of each valve, keyed to flow and control diagrams.

N. Provide list of original manufacturer's spare parts, current prices, and recommended quantities to be maintained in storage.

O. Include test and balancing reports.

P. Additional Requirements: As specified in individual product specification sections.

3.6 ASSEMBLY OF EMERGENCY, OPERATION, AND MAINTENANCE MANUALS

A. Assemble data into durable manuals for Owner's personnel use, with data arranged in the same sequence as, and identified by, the specification sections.

B. Where systems involve more than one specification section, provide separate tabbed divider for each system.

C. Manual: Bind Commercial quality, 8-1/2 by 11 inch three D side ring binders with durable plastic covers; 2 inch maximum ring size. When multiple binders are used, correlate data into related consistent groupings.

D. Electronic File: PDF format files of completed document, on a USB drive.

3.7 WARRANTIES AND BONDS

A. Obtain warranties and bonds, executed in duplicate by responsible Subcontractors, suppliers, and manufacturers, within 10 days after completion of the applicable item of work. Except for items put into use with Owner's permission, leave date of beginning of time of warranty until Date of Substantial completion is determined.

B. Verify that documents are in proper form, contain full information, and are notarized.

C. Include procedures to follow and required notifications for warranty claims.

D. Co-execute submittals when required, from subcontractors, suppliers, and manufactures.

E. Submit warranties and bonds before final Application for Payment.

F. Time of Submittals:

1. For equipment or component parts of equipment put into service during construction with Owner's permission, submit documents within 10 days after acceptance.
2. Make other submittals within 10 days after Date of Substantial Completion and before final Application for Payment.
3. For items of Work for which acceptance is delayed beyond Date of Substantial Completion, submit within 10 days after acceptance, listing date of acceptance as beginning of warranty or bond period.

G. Manual: Bind in commercial quality 8-1/2 by 11 inch three D side ring binders with durable plastic covers.

1. Cover: Identify each binder with typed or printed title WARRANTIES AND BONDS, with title of Project; name, address and telephone number of Contractor and equipment supplier; and name of responsible company principal.
2. Table of Contents: Neatly typed, in the sequence of the Table of Contents of the Project Manual, with each item identified with the number and title of the specification section in which specified, and the name of product or work item.
3. Separate each warranty or bond with index tab sheets keyed to the Table of Contents listing. Provide full information, using separate typed sheets as necessary. List Subcontractor, supplier, and manufacturer, with name, address, and telephone number of responsible principal.

H. Electronic File: Provide warranties and bonds in PDF format. Assemble complete warranty and bond submittal package into a single electronic PDF file with bookmarks enabling navigation to each item. Provide bookmarked table of contents at beginning of document.

1. Organize warranty documents into an orderly sequence based on the table of contents of Project Manual.

I. Provide additional copies of each warranty to include in operation and maintenance manuals.

END OF SECTION

SECTION 017900 - DEMONSTRATION AND TRAINING

PART 1 GENERAL

1.1 SUMMARY

A. Demonstration of products and systems, subsystems, and equipment and where indicated in specific specification sections.
B. Training of Owner personnel in operation and maintenance is required for:
   1. All software-operated systems.
   2. HVAC systems and equipment.
   3. Electrical systems and equipment.
   4. Items specified in individual product Sections.
C. Training of Owner personnel in care, cleaning, maintenance, and repair is required for:
   1. Finishes, including flooring and wall finishes.
   2. Items specified in individual product Sections.

1.2 RELATED REQUIREMENTS

A. Section 017800 - Closeout Submittals: Operation and maintenance (O&M) manuals.

1.3 SUBMITTALS

A. See Section 013000 - Administrative Requirements, for submittal procedures.
B. Training Plan: Owner will designate personnel to be trained; tailor training to needs and skill-level of attendees.
   1. Submit to Architect for transmittal to Owner.
   2. Submit not less than two weeks prior to start of training.
   3. Revise and resubmit until acceptable.
   4. Provide an overall schedule showing all training sessions.
   5. Include at least the following for each training session:
      a. Identification, date, time, and duration.
      b. Description of products and/or systems to be covered.
      c. Name of firm and person conducting training; include qualifications.
      d. Intended audience, such as job description.
      e. Objectives of training and suggested methods of ensuring adequate training.
      f. Methods to be used, such as classroom lecture, live demonstrations, hands-on, etc.
      g. Media to be used, such a slides, hand-outs, etc.
      h. Training equipment required, such as projector, projection screen, etc., to be provided by Contractor.
C. Training Manuals: Provide training manual for each attendee; allow for minimum of two attendees per training session.
   1. Include applicable portion of O&M manuals.
   2. Include copies of all hand-outs, slides, overheads, video presentations, etc., that are not included in O&M manuals.
   3. Provide one extra copy of each training manual to be included with operation and maintenance data.
D. Video Recordings: Submit digital video recording of each demonstration and training session for Owner's subsequent use.
   1. Format: USB drive.
   2. File Hierarchy: Organize folder structure and file locations according to Project Manual table of contents. Provide complete screen-based menu.
   3. File Names: Utilize file names based on name of equipment generally described in video segment, as identified in Project specifications.

4. Contractor and Installer Contact File: Using appropriate software, create a file for inclusion on the equipment demonstration and training recording that describes the following for each Contractor involved on the Project, arranged according to Project Manual table of contents:
    a. Name of Contractor/Installer.
    b. Business address.
    c. Business phone number.
    d. Point of contact.
    e. Email address.
5. Narration: Include description of items being viewed.
6. Transcript: Provide a transcript of the narration. Display images and running time captured from videotape opposite the corresponding narration segment.
7. Preproduced Video Recordings: Provide video recordings used as a component of training modules in same format as recordings of live training.

1.4 QUALITY ASSURANCE

A. Instructor Qualifications: A factory-authorized service representative, complying with requirements in Section 014000 - Quality Requirements, experienced in operation and maintenance procedures and training.
B. Preinstruction Conference: Conduct conference at Project site to comply with requirements in Section 013000 - Administrative Requirements. Review methods and procedures related to demonstration and training including, but not limited to, the following:
    1. Inspect and discuss locations and other facilities required for instruction.
    2. Review and finalize instruction schedule and verify availability of educational materials, instructors' personnel, audiovisual equipment, and facilities needed to avoid delays.
    3. Review required content of instruction.
    4. For instruction that must occur outside, review weather and forecasted weather conditions and procedures to follow if conditions are unfavorable.

1.5 INSTRUCTION PROGRAM

A. Program Structure: Develop an instruction program that includes individual training modules for each system and for equipment not part of a system, as required by individual specification sections.
B. Training Modules: Develop a learning objective and teaching outline for each module. Include a description of specific skills and knowledge that participant is expected to master.

PART 2 PRODUCTS - NOT USED

PART 3 EXECUTION

3.1 DEMONSTRATION - GENERAL

A. Demonstrations conducted during system start-up do not qualify as demonstrations for the purposes of this section, unless approved in advance by Owner.
B. Demonstration may be combined with Owner personnel training if applicable.
C. Operating Equipment and Systems: Demonstrate operation in all modes, including start-up, shut-down, seasonal changeover, emergency conditions, and troubleshooting, and maintenance procedures, including scheduled and preventive maintenance.
    1. Perform demonstrations not less than two weeks prior to Substantial Completion.
    2. For equipment or systems requiring seasonal operation, perform demonstration for other season within six months.
D. Non-Operating Products: Demonstrate cleaning, scheduled and preventive maintenance, and repair procedures.
    1. Perform demonstrations not less than two weeks prior to Substantial Completion.

3.2 TRAINING - GENERAL

A. Conduct training on-site unless otherwise indicated.
B. Owner will provide classroom and seating at no cost to Contractor.
C. Provide training in minimum two hour segments.
D. Training schedule will be subject to availability of Owner's personnel to be trained; re-schedule training sessions as required by Owner; once schedule has been approved by Owner failure to conduct sessions according to schedule will be cause for Owner to charge Contractor for personnel "show-up" time.
E. Review of Facility Policy on Operation and Maintenance Data: During training discuss:
    1. The location of the O&M manuals and procedures for use and preservation; backup copies.
    2. Typical contents and organization of all manuals, including explanatory information, system narratives, and product specific information.
    3. Typical uses of the O&M manuals.
F. Product- and System-Specific Training:
    1. Review the applicable O&M manuals.
    2. For systems, provide an overview of system operation, design parameters and constraints, and operational strategies.
    3. Review instructions for proper operation in all modes, including start-up, shut-down, seasonal changeover and emergency procedures, and for maintenance, including preventative maintenance.
    4. Provide hands-on training on all operational modes possible and preventive maintenance.
    5. Emphasize safe and proper operating requirements; discuss relevant health and safety issues and emergency procedures.
    6. Discuss common troubleshooting problems and solutions.
    7. Discuss any peculiarities of equipment installation or operation.
    8. Discuss warranties and guarantees, including procedures necessary to avoid voiding coverage.
    9. Review recommended tools and spare parts inventory suggestions of manufacturers.
    10. Review spare parts and tools required to be furnished by Contractor.
    11. Review spare parts suppliers and sources and procurement procedures.
G. Be prepared to answer questions raised by training attendees; if unable to answer during training session, provide written response within three days.

END OF SECTION

SECTION 018114 - SUSTAINABLE DESIGN REQUIREMENTS - CALGREEN

PART 1 GENERAL

1.1 SUMMARY

A. Section Includes: General requirements and procedures for compliance with CALGreen Mandatory Requirements for new construction based on the current California Green Building Standards Code (CALGreen).
   1. Some CALGreen requirements depend on product selections and may not be specifically identified as CALGreen requirements. Compliance with CALGreen requirements may be used as one criterion to evaluate substitution requests.

B. Related Requirements:
   1. Section 017419 - Construction Waste Management and Disposal: Additional construction waste management requirements.
   2. Division 23 Section(s) for testing, adjusting, and balancing of mechanical systems and controls.
   3. Division 26 Section(s) for testing and adjusting of indoor lighting and controls.
   4. Specific requirements for CALGreen are included in greater detail in other Sections.

1.2 DEFINITIONS

A. CALGreen: California Code of Regulations, Title 24, Part 11, California Green Building Standards Code, Current Edition.

B. Refer to CALGreen for definition of terms not given herein.

1.3 REFERENCES

A. ASHRAE Std 52.2 - Method of Testing General Ventilation Air-Cleaning Devices for Removal Efficiency by Particle Size; 2025.

B. CAL (CDPH SM) - Standard Method for the Testing and Evaluation of Volatile Organic Chemical Emissions from Indoor Sources Using Environmental Chambers Version 1.2; 2017.

C. CARB (ATCM) - Airborne Toxic Control Measure to Reduce Formaldehyde Emissions from Composite Wood Products; Current Edition.

D. CHPS (HPPD) - High Performance Products Database; Current Edition.

E. NSF/ANSI 140 - Sustainability Assessment for Carpet; 2024.

F. SCAQMD 1168 - Adhesive and Sealant Applications; 1989, with Amendment (2022).

1.4 PREINSTALLATION MEETINGS

A. Preinstallation Conference: Conduct conference at Project site. Review CALGreen requirements and action plans for compliance with requirements.

1.5 ADMINISTRATIVE REQUIREMENTS

A. Submit documentation to enforcing agency that are the responsibility of Contractor, that depend on product selection or product qualities, or that depend on Contractor's procedures until enforcing agency has made its determination on Project's CALGreen certification application.
   1. Document correspondence with review team, as assigned by the enforcing agency, as informational submittals.

1.6 ACTION SUBMITTALS

A. General: Submit additional sustainable design submittals required by other sections.

B. Sustainable design submittals are in addition to other submittals.
   1. If submitted item is identical to that submitted to comply with other requirements, include an additional copy with other submittal as a record copy of compliance with indicated CALGreen requirements instead of separate sustainable design submittal. Mark additional copy "Sustainable design submittal."

C. Sustainable Design Documentation Submittals: Provide sustainable design submittals required by CALGreen, other Sections, and the following:
   1. Stormwater pollution prevention plan (CALGreen Section 5.106.1 and .2).
   2. Product data for irrigation system components (CALGreen Section 5.407.2.1).
   3. Product data and schedules for plumbing fixtures and fittings (CALGreen Section 5.303.3).
   4. Construction Waste Reduction, Disposal, and Recycling (CALGreen Section 5.408): Comply with Section 017419 - Construction Waste Management and Disposal.
   5. Commissioning, New Buildings 10,000 Square Feet and Over (CALGreen Section 5.410.2): For new buildings 10,000 square feet and over, building commissioning shall be included in the design and construction processes of the building project to verify that the building systems and components meet the Owner's or Owner representative's project requirements. Commissioning shall be performed in accordance with CALGreen by trained personnel with experience on projects of comparable size and complexity. A report of commissioning process activities undertaken through the design and construction phases of the building project shall be completed and provided to the Owner or representative.
   6. Testing and Adjusting, New Buildings Less Than 10,000 Square Feet (CALGreen Section 5.410.4): Testing and adjusting of systems shall be required for new buildings less than 10,000 square feet or new systems to serve an addition or alteration subject to CALGReen Section 303.1. Perform testing and adjusting procedures in accordance with specified requirements, CALGreen, and manufacturer's specifications and applicable standards on each system. After completion of testing, adjusting and balancing, provide a final report of testing signed by the individual responsible for performing these services.
   7. Adhesive, Sealants and Caulks (CALGreen Section 5.504.4.1, 5.504.4.2): Product data for adhesives, sealants and caulks, indicating VOC content of each product used.
   8. Paints and Coatings (CALGreen Section 5.404.4.3): Product data for paints and coatings indicating VOC content of each product used.
   9. Carpet Systems (CALGreen Section 5.504.4.4): Product data for carpet systems indicating compliance with referenced standard(s).
   10. Composite Wood Products (CALGreen Section 5.504.4.5): Product data for composite wood products indicating compliant formaldehyde levels.
   11. Resilient Floor Systems (CALGreen Section 5.504.4.6): Product data for resilient flooring systems indicating compliance with referenced standard(s).
   12. Outdoor Air Quality (CALGreen Section 5.508.1): Product data for HVAC system, indicating refrigerant complies with referenced standards.

1.7 INFORMATIONAL SUBMITTALS

A. Sustainable Design Action Plans: Provide preliminary submittals within 30 days of date established for the Notice to Proceed, indicating how the following requirements will be met:
   1. CALGreen check list for mandatory measures.
   2. Waste management plan complying with Section 017419 - Construction Waste Management and Disposal.
   3. Construction IAQ management plan.
B. CALGreen Progress Reports: Concurrent with each Application for Payment, submit reports comparing actual construction and purchasing activities with CALGreen action plans for the following:
   1. CALGreen Sections 5.408.1.4: Waste reduction progress reports complying with Section 017419 - Construction Waste Management and Disposal.

PART 2 PRODUCTS

2.1 MATERIALS

A. Provide products and procedures necessary to comply with CALGreen requirements referenced in this Section and in Division 02 through 33 Sections. Although other Sections may specify some requirements that contribute to referenced CALGreen requirements, Contractor will determine additional materials and procedures necessary to comply with CALGreen requirements indicated.

2.2 LOW-EMITTING MATERIALS

A. Adhesives, Sealants, and Caulks (CALGreen Section 5.504.4.1):

1. Adhesives, adhesive bonding primers adhesive primers, sealants, sealant primers and caulks shall comply with local or regional air pollution control or air quality management district rules where applicable, or SCAQMD 1168 VOC limits, as shown in Tables 5.504.4.1 and 5.504.4.2. Such products also shall comply with the Rule 1168 prohibition on the use of certain toxic compounds (chloroform, ethylene dichloride, methylene chloride, perchloroethylene and trichloroethylene), except for aerosol products as specified below.
2. Aerosol adhesives, and smaller unit sizes of adhesives, and sealant or caulking compounds (in units of product, less packaging, which do not weigh more than one pound and do not consist of more than 16 fluid ounces) shall comply with statewide VOC standards and other requirements, including prohibitions on use of certain toxic compounds, of California Code of Regulations, Title 17, commencing with Section 94507.

B. Paints and Coatings (CALGreen Section 5.404.4.3):

1. Architectural paints and coatings shall comply with VOC limits in Table 1 of the ARB Architectural Coatings Suggested Control Measure, as shown in Table 5.504.4.3, unless more stringent local limits apply. The VOC content limit for coatings that do not meet the definitions for the specialty coatings categories listed in Table 5.504.4.3 shall be determined by classifying the coating as a Flat, Nonflat or Nonflat-High Gloss coating, based on its gloss, as defined in Subsections 4.21, 4.36 and 4.37 of the 2007 California Air Resources Board, Suggested Control Measure, and the corresponding Flat, Nonflat or Nonflat-High Gloss VOC limit in Table 5.504.4.3 shall apply.
2. Aerosol paints and coatings. Aerosol paints and coatings shall meet the PWMIR Limits for ROC in Section 94522(a)(3) and other requirements, including prohibitions on use of certain toxic compounds and ozone depleting substances, in Sections 94522(c)(2) and (d)(2) of California Code of Regulations, Title 17, commencing with Section 94520; and in areas under the jurisdiction of the Bay Area Air Quality Management District additionally comply with the percent VOC by weight of product limits of Regulation 8 Rule 49.

C. Carpet Systems (CALGreen Section 5.504.4.4):

1. All carpet installed in the building interior shall meet at least one of the following testing and product requirements:
   a. Carpet and Rug Institute's Green Label Plus Program.
   b. Compliant with the VOC-emission limits and testing requirements specified in the California Department of Public Health Standard Method for the Testing and Evaluation of Volatile Organic Chemical Emissions from Indoor Sources Using Environmental Chambers, Version 1.1, February 2010 (also known as CDPH Standard Method VI.I or Specification 01350).
   c. NSF/ANSI 140 NSF/ANSI 140 at the Gold level or higher.
   d. Scientific Certifications Systems Sustainable Choice.
   e. Compliant with the Collaborative for High Performance Schools California CHPS (HPPD) (2014 CA-CHPS) Criteria and listed in the CHPS High Performance Product Database.
2. All carpet cushion installed in the building interior shall meet the requirements of the Carpet and Rug Institute's Green Label program.
3. All carpet adhesive shall meet the requirements of Table 5.504.4.1.

D. Composite Wood Products (CALGreen Section 5.504.4.5):

1. Hardwood plywood, particleboard and medium density fiberboard composite wood products used on the interior or exterior of the building shall meet the requirements for formaldehyde as specified in CARB (ATCM) for Composite Wood (17 CCR 93120 et seq.) Those materials not exempted under the ATCM must meet the specified emission limits, as shown in Table 5.504.4.5..

E. Resilient Flooring Systems (CALGreen Section 5.504.4.6):

1. For 80 percent of floor area receiving resilient flooring, installed resilient flooring shall meet at least one of the following:
   a. Certified under the Resilient Floor Covering Institute (RFCI) FloorScore program.
   b. Compliant with the VOC-emission limits and testing requirements specified in the California Department of Public Health's 2010 Standard Method for the Testing and Evaluation Chambers, Version 1.1, February 2010.
   c. Compliant with the CHPS (HPPD) Criteria and listed in the CHPS High Performance Product Database.

d. Compliant with CAL (CDPH SM) criteria as certified under the UL Greenguard Gold.

F. Verification of Compliance: Provide documentation verifying that materials meet the pollutant emission limits.

PART 3 EXECUTION

3.1 ENVIRONMENTAL TOBACCO SMOKE (ETS) CONTROL

A. Environmental Tobacco Smoke (ETS) Control (CALGreen Section 5.504.7):

1. Smoking is not permitted within the building or within 25 feet of entrances, operable windows, or outdoor-air intakes.

3.2 CONSTRUCTION WASTE MANAGEMENT

A. Construction Waste Reduction, Disposal and Recycling (CALGreen Sections 5.408):

1. Comply with Section 017419 - Construction Waste Management and Disposal.

3.3 COMMISSIONING

A. CALGreen requires commissioning of the building mechanical and electrical systems to ensure proper installation and optimized performance as the building starts to be occupied. It also requires a systematic quality assurance process that spans the entire design and construction process and includes verifying and documenting that building systems and components are planned, designed, installed, tested, operated, and maintained to meet Owner's project requirements.

B. Comply with Section 019113 - General Commissioning Requirements and other commissioning requirements as specified in other sections.

3.4 INDOOR-AIR-QUALITY ASSESSMENT

A. Temporary Ventilation (CALGreen Section 5.504.1):

1. The permanent HVAC system shall only be used during construction if necessary to condition the building or areas of addition or alteration within the required temperature range for material and equipment installation. If the HVAC system is used during construction, use return air filters with a Minimum Efficiency Reporting Value (MERV) of 8, based on ASHRAE 52.2-1999, or an average efficiency of 30 percent based on ASHRAE 52.1-1992. Replace all filters immediately prior to occupancy, or, if the building is occupied during alteration, at the conclusion of construction.

B. Covering of Duct Openings and Protection of Mechanical Equipment During Construction (CALGreen Section 5.504.3):

1. At the time of rough installation and during storage on the construction site until final startup of the heating, cooling and ventilating equipment, all duct and other related air distribution component openings shall be covered with tape, plastic, sheetmetal or other methods acceptable to the enforcing agency to reduce the amount of dust, water and debris which may enter the system.

END OF SECTION

SECTION 024119 - SELECTIVE DEMOLITION

PART 1 GENERAL

1.1 SUMMARY

A. The Work of this Section Includes:
   1. Demolition and removal of selected portions of exterior or interior of building or structure and site elements.
   2. Removal and salvage of existing items for delivery to Owner and removal of existing items for reinstallation.
B. Related Requirements:
   1. Section 011000 "Summary" for restrictions on use of the premises, Owner-occupancy requirements, and phasing requirements.
   2. Section 015639 "Temporary Tree and Plant Protection" for temporary protection of existing trees and plants that are affected by selective demolition.
   3. Section 017300 "Execution" for cutting and patching procedures.
   4. Section 013516 "Alteration Project Procedures" for general protection and work procedures for alteration projects.
   5. Section 311000 "Site Clearing" for site clearing and removal of above- and below-grade improvements not part of selective demolition.
   6. Section 330500 "Common Work Results for Utilities" for removal of site utility systems piping, equipment, and components.

1.2 DEFINITIONS

A. Remove and Salvage: Detach items from existing construction, in a manner to prevent damage, and deliver to Owner as indicated.
B. Remove and Reinstall: Detach items from existing construction, in a manner to prevent damage; prepare for reuse; and reinstall where indicated.
C. Existing to Remain: Existing items of construction that are not to be removed.

1.3 MATERIALS OWNERSHIP

A. Unless otherwise indicated, demolition waste becomes property of Contractor.
B. Historic items, relics, antiques, and similar objects including, but not limited to, cornerstones and their contents, commemorative plaques and tablets, and other items of interest or value to Owner that may be uncovered during demolition remain the property of Owner.
   1. Carefully salvage in a manner to prevent damage and promptly return to Owner.

1.4 COORDINATION

A. Arrange selective demolition schedule so as not to interfere with Owner's operations.

1.5 PREINSTALLATION MEETINGS

A. Predemolition Conference: Conduct conference at the Project site.

1.6 INFORMATIONAL SUBMITTALS

A. Proposed Protection Measures: Submit report, including Drawings, that indicates the measures proposed for protecting individuals and property for environmental protection, for dust control and for noise control. Indicate proposed locations and construction of barriers.
B. Schedule of Selective Demolition Activities: Indicate the following:
   1. Detailed sequence of selective demolition and removal work, with starting and ending dates for each activity. Ensure Owner's on-site operations are uninterrupted.
   2. Temporary interruption of utility services. Indicate how long utility services will be interrupted.

3. Coordination for shutoff, capping, and continuation of utility services.
4. Coordination of Owner's continuing occupancy of portions of existing building and of Owner's partial occupancy of completed Work.

1.7 CLOSEOUT SUBMITTALS

A. Inventory: Submit a list of items that have been removed and salvaged.

1.8 FIELD CONDITIONS

A. Owner will occupy portions of building immediately adjacent to selective demolition area. Conduct selective demolition so Owner's operations will not be disrupted.
B. Notify Architect of discrepancies between existing conditions and Drawings before proceeding with selective demolition.
C. Hazardous Materials:
1. It is not expected that hazardous materials will be encountered in the Work.
a. If materials suspected of containing hazardous materials are encountered, do not disturb; immediately notify Architect and Owner. Hazardous materials will be removed by Owner under a separate contract.

PART 2 PRODUCTS (NOT USED)

PART 3 EXECUTION

3.1 EXAMINATION

A. Verify that utilities have been disconnected and capped before starting selective demolition operations.
B. Engage a professional engineer to perform an engineering survey of condition of building to determine whether removing any element might result in structural deficiency or unplanned collapse of any portion of structure or adjacent structures during selective building demolition operations.
C. Survey of Existing Conditions: Record existing conditions by use of preconstruction photographs or video. Comply with Section 013233 "Photographic Documentation."
1. Inventory and record the condition of items to be removed for salvage or reinstallation. Photograph or video conditions that might be misconstrued as damage caused by removal.
2. Photograph or video existing conditions of adjoining construction including finish surfaces, that might be misconstrued as damage caused by selective demolition operations or removal of items for salvage or reinstallation.

3.2 PREPARATION

A. Temporary Shoring: Design, provide, and maintain shoring, bracing, and structural supports as required to preserve stability and prevent movement, settlement, or collapse of construction and finishes to remain, and to prevent unexpected or uncontrolled movement or collapse of construction being demolished.
1. Strengthen or add new supports when required during progress of selective demolition.
B. Temporary Protection: Provide temporary barricades and other protection required to prevent injury to people and damage to adjacent buildings and facilities to remain.
1. Provide protection to ensure safe passage of people around selective demolition area and to and from occupied portions of building.
2. Provide temporary weather protection, during interval between selective demolition of existing construction on exterior surfaces and new construction, to prevent water leakage and damage to structure and interior areas.
3. Protect walls, ceilings, floors, and other existing finish work that are to remain or that are exposed during selective demolition operations.
4. Cover and protect furniture, furnishings, and equipment that have not been removed.
5. Comply with requirements for temporary enclosures, dust control, heating, and cooling specified in Section 015000 "Temporary Facilities and Controls."

C. Existing Items to Remain: Protect construction indicated to remain against damage and soiling during selective demolition. When permitted by Architect, items may be removed to a suitable, protected storage location and reinstalled in their original locations after selective demolition operations are complete.

3.3 UTILITY SERVICES AND BUILDING SYSTEMS

A. Existing Services/Systems to Remain: Maintain utilities and building systems and equipment to remain and protect against damage during selective demolition operations.
   1. Maintain fire-protection facilities in service during selective demolition operations.
B. Existing Services/Systems to Be Removed, Relocated, or Abandoned: Locate, identify, disconnect, and seal or cap off utilities and building systems serving areas to be selectively demolished.
   1. Arrange to shut off utilities with utility companies.
   2. If disconnection of utilities and building systems will affect adjacent occupied parts of the building, provide temporary services/systems that bypass area of selective demolition and that maintain continuity of services/systems to those parts of the building.
   3. Demolish and remove existing building systems, equipment, and components indicated on Drawings to be removed.
      a. Piping to Be Removed: Remove portion of piping indicated to be removed and cap or plug remaining piping with same or compatible piping material.
      b. Ducts to Be Removed: Remove portion of ducts indicated to be removed and plug remaining ducts with same or compatible ductwork material.
      c. Equipment to Be Removed: Disconnect and cap services and remove equipment and components.
   4. Abandon existing building systems, equipment, and components indicated on Drawings to be abandoned in place.
      a. Piping to Be Abandoned in Place: Drain piping and cap or plug piping with same or compatible piping material and leave in place.
      b. Ducts to Be Abandoned in Place: Cap or plug ducts with same or compatible ductwork material and leave in place.
   5. Remove and reinstall/salvage existing building systems, equipment, and components indicated on drawings to be removed and reinstalled or removed and salvaged:
      a. Equipment to Be Removed and Reinstalled: Disconnect and cap services and remove, clean, and store equipment and components; when appropriate, reinstall, reconnect, and make equipment operational.
      b. Equipment to Be Removed and Salvaged: Disconnect and cap services and remove equipment and components and deliver to Owner.

3.4 SELECTIVE DEMOLITION, GENERAL

A. General: Demolish and remove existing construction only to extent required by new construction and as indicated. Use methods required to complete the Work within limitations of governing regulations and as follows:
   1. Neatly cut openings and holes plumb, square, and true to dimensions required. Use cutting methods least likely to damage construction to remain or adjoining construction. Use hand tools or small power tools designed for sawing or grinding, not hammering and chopping. Temporarily cover openings to remain.
   2. Cut or drill from the exposed or finished side into concealed surfaces to avoid marring existing finished surfaces.
   3. Do not use cutting torches until work area is cleared of flammable materials. At concealed spaces, such as duct and pipe interiors, verify condition and contents of hidden space before starting flame-cutting operations. Maintain portable fire-suppression devices during flame-cutting operations.
   4. Maintain fire watch during and for at least 24 hours after flame-cutting operations.
   5. Maintain adequate ventilation when using cutting torches.
   6. Remove decayed, vermin-infested, or otherwise dangerous or unsuitable materials and promptly dispose of off-site.
   7. Locate selective demolition equipment and remove debris and materials so as not to impose excessive loads on supporting walls, floors, or framing.

B. Site Access and Temporary Controls: Conduct selective demolition and debris-removal operations to ensure minimum interference with roads, streets, walks, walkways, and other adjacent occupied and used facilities.

1. Do not close or obstruct streets, walks, walkways, or other adjacent occupied or used facilities without permission from Owner and authorities having jurisdiction. Provide alternate routes around closed or obstructed trafficways if required by authorities having jurisdiction.
2. Use water mist and other suitable methods to limit spread of dust and dirt. Comply with governing environmental-protection regulations. Do not use water when it may damage adjacent construction or create hazardous or objectionable conditions, such as ice, flooding, and pollution.

3.5 SELECTIVE DEMOLITION PROCEDURES FOR SPECIFIC MATERIALS

A. Concrete:

1. Demolish in sections. Cut concrete full depth at junctures with construction to remain and at regular intervals using power-driven saw, and then remove concrete between saw cuts.

B. Concrete Slabs-on-Grade: Saw-cut perimeter of area to be demolished, and then break up and remove.

3.6 DISPOSAL OF DEMOLISHED MATERIALS

A. Remove demolition waste materials from Project site and dispose of them in an EPA-approved construction and demolition waste landfill acceptable to authorities having jurisdiction.

1. Do not allow demolished materials to accumulate on-site.
2. Remove and transport debris in a manner that will prevent spillage on adjacent surfaces and areas.
3. Remove debris from elevated portions of building by chute, hoist, or other device that will convey debris to grade level in a controlled descent.
4. Comply with requirements specified in Section 017419 "Construction Waste Management and Disposal."

B. Burning: Do not burn demolished materials.

3.7 CLEANING

A. Clean adjacent structures and improvements of dust, dirt, and debris caused by selective demolition operations. Return adjacent areas to condition existing before selective demolition operations began.

END OF SECTION 024119

SECTION 031000 - CONCRETE FORMING AND ACCESSORIES

PART 1 GENERAL

1.1 SUMMARY

A. The Contractor shall design, construct, and place formwork and other related Work complete, as indicated on the Drawings and as specified.
B. Section includes:
   1. Formwork for cast-in-place concrete, with or without shoring, bracing and anchorage.
   2. Openings for other Work.
   3. Form accessories.

1.2 FORM STRIPPING.RELATED SECTIONS

A. Section 01 33 00, “Submittal Procedures”
B. Section 03 20 00, “Concrete Reinforcing”
C. Section 03 30 00, “Cast-in-Place Concrete”
D. Section 03 31 00, “Structural Concrete”

1.3 REFERENCES

A. The following publications form a part of this Specification to the extent referenced. The publications are referred to in the text by the basic designation only. The latest edition of the applicable publication in effect at the time the Contract is awarded shall be used.
   1. American Concrete Institute (ACI):
      a. 117 - Standard Specifications for Tolerances for Concrete Construction and Materials.
      b. 301 - Specifications for Structural Concrete.
      c. 318 - Building Code Requirements for Structural Concrete and Commentary.
      d. 347 - Guide to Formwork for Concrete.
   2. American Society for Testing and Materials (ASTM):
      a. A 36/A 36M - Standard Specification for Carbon Structural Steel.

1.4 SUBMITTALS

A. See Section 01 33 00, “Submittal Procedures.”
B. Product Data: Material’s manufacturer data and installation requirements.
C. Shop Drawings:
   1. Forms: Indicate pertinent dimensions, materials, accessories, bracing, form release agent, gasketing to prevent leakage at form, construction joints, and arrangement of joints and ties.
   2. Form Removal Schedule: Sequence of form and shoring removal indicating element and minimum length of time for form removal.
D. Formwork design calculation signed by a California Registered Professional Engineer.
E. Method of repair of concrete including full description of materials and methods to be used to patch form-tie holes, if needed.

1.5 QUALITY ASSURANCE

A. Design formwork shall be done under direct supervision of a professional Civil or Structural Engineer experienced in design of concrete formwork and licensed in the State of California.

1.6 REGULATORY REQUIREMENTS

A. Conform to applicable State and local code for design, fabrication, erection, and removal of formwork.

1.7 DELIVERY, STORAGE, AND HANDLING

A. Store forms off ground in ventilated and protected manner to prevent deterioration from moisture.

PART 2 PRODUCTS

2.1 FORMWORK - GENERAL

A. Provide concrete forms, accessories, shoring, and bracing as required to accomplish cast-in-place concrete Work.
B. The design of formwork shall be the responsibility of the Contractor.
   1. Design and construct to provide resultant concrete that conforms to design with respect to shape, lines, and dimensions.
C. Comply with applicable State and local codes with respect to design, fabrication, erection, and removal of formwork.
D. Comply with relevant portions of ACI 347, ACI 301, and ACI 318.

2.2 FORM MATERIALS

A. Form materials shall be at the discretion of the Contractor.
   1. Forms shall be of steel, fiberglass, plywood, or dense particleboard.
   2. Aluminum forms are not allowed to be used.

2.3 FORMWORK ACCESSORIES

A. Form Release Agent: Capable of releasing forms from hardened concrete without staining or discoloring concrete or forming bugholes and other surface defects, compatible with concrete and form materials, and not requiring removal for satisfactory bonding of coatings to be applied.
B. Form Ties and Form-Facing Material:
   1. Provide a form tie system that does not leave mild steel after break-off or removal any closer the 2 inches from the exposed surface. Do not use wire alone. Form ties and accessories must not reduce the effective cover of reinforcement.
   2. Form-facing material must be a material that can absorb air and some of the high water-cementitious materials ratio surface paste that may be trapped in pockets between the form and the concrete. Maximum reuse is three times.

PART 3 EXECUTION

3.1 EXAMINATION

A. Verify lines, levels, and centers before proceeding with formwork. Ensure that dimensions agree with Drawings.
B. Design formwork in accordance with ACI 347 to provide the concrete finishes specified in Section 03 30 00, “Cast-in-Place Concrete.”

3.2 ERECTION - FORMWORK

A. Forms shall be constructed sufficiently tight to prevent leakage, securely braced and shored to prevent displacement and to safely support construction loads. Access and openings shall be provided for cleaning and inspecting forms and reinforcing prior to depositing concrete. Wood forms shall be kept wet as necessary to prevent shrinkage.
B. Erect formwork, shoring, and bracing to achieve design requirements, in accordance with requirements of ACI 301.
C. Provide bracing to ensure stability of formwork. Shore or strengthen formwork subject to overstressing by construction loads.

D. Forms for exposed concrete shall provide for a ¾-inch chamfer on all external comers, unless otherwise noted on the Drawings.

E. Form ties shall be of a type approved by the Engineer. They shall be of break back construction such that they leave no metal closer than 2 inches from the concrete surface. After removal of forms, the tie holes shall be coated with an approved bonding agent and filled with dry pack grout. If oil or grease is used on form ties, the holes shall be coated and swabbed with a grease-dissolving solvent, thoroughly rinsed with potable water, and allowed to dry, prior to applying bonding agent.

3.3 APPLICATION - FORM RELEASE AGENT

A. Forms shall be treated with suitable commercial form oil or other coating materials, which shall prevent sticking of the concrete but shall not cause softening or permanent staining of the concrete surface.

B. The materials used for treating forms shall not impede the wetting of surfaces to be water cured or the proper functioning of sealing compounds used for curing.

1. Consult with the manufacturer of specified damp- and water-proofing material for compatibility and possible need for hydro-blasting formed surfaces prior to product application.

2. The coating material shall be applied uniformly by brush or spray and shall not be allowed to get on construction joints or reinforcement bars.

C. Apply form release agent on formwork in accordance with the manufacturer's recommendations.

D. Apply form release agent prior to placement of reinforcing steel, anchoring devices, fluted sleeves, and other embedded items.

3.4 INSERTS, EMBEDDED PARTS, AND OPENINGS

A. The embedded portion of embedded items shall be clean and free of oil and other deleterious substances which would interfere with proper bonding to the concrete.

B. All anchors, bolts, sleeves, etc., that are required to be embedded in the concrete shall be properly set in the forms and checked by the Engineer prior to the placement of concrete.

C. Provide formed openings where required for items to be embedded in passing through concrete Work except for conduits where concrete can be placed directly against conduit.

D. Locate and set in place items that will be cast directly into concrete.

E. Provide temporary ports or openings in formwork where required to facilitate cleaning and inspection. Locate openings at bottom of forms to allow flushing water to drain.

F. Close temporary openings with tight-fitting panels, flush with inside face of forms, and neatly fitted so joints will not be apparent in exposed concrete surfaces.

3.5 ADJUSTING AND FORM CLEANING

A. Thoroughly clean form surfaces in contact with concrete or previous concrete, dirt, and other surface contaminants prior to coating surface.

B. Clean formed cavities of debris prior to placing concrete.

C. Clean forms as erection proceeds to remove foreign matter within forms.

D. Immediately after the forms have been removed, all form bolts shall be removed to a depth of at least 2 inches below the surface of the concrete.

1. Within 3 days after stripping of forms, all holes or depressions caused by setting back such form bolts shall be cleaned and filled with a cement mortar of matching color composed of one part by volume of Portland cement and two parts of sand.

3.6 FORMWORK TOLERANCES

A. Construct formwork to maintain tolerances required by ACI 117, Section 03 30 00, "Cast-in-Place Concrete," and Drawings, whichever is more stringent.

3.7 FORM REMOVAL AND REUSE

A. Formwork not supporting weight of concrete, may be removed after cumulatively curing at not less than 50° F for 24 hours after placing concrete, provided concrete is sufficiently hard to not be damaged by form-removal operations, and provided curing and protection operations are maintained. This duration shall not be reduced during construction. The Contractor shall schedule appropriately to meet this requirement.

B. Leave forms and shoring for elevated structural slabs or beams in place, in accordance with ACI 318, and until concrete has reached compressive strength equal to 80 percent of the specified 28-day compressive strength as determined by test cylinders.

C. Clean and repair surfaces of forms to be reused in the Work. Split, frayed, delaminated, or otherwise damaged form-facing material shall not be acceptable for exposed surfaces. Apply new form-release agent.

D. When forms are reused, clean surfaces, remove fins and laitance, and tighten to close joints. Align and secure joints to avoid offsets. Do not use patched forms for exposed concrete surfaces unless approved by the Engineer.

3.8 REPAIR

A. Upon removal of forms, the Engineer shall be notified by the Contractor to inspect the newly stripped surfaces. Repairs of imperfections in new concrete, which may be required, shall be carried out while the concrete is still green, within 24 hours after stripping of the forms. The methods of repair shall be subject to Engineer approval.

PART 4 MEASUREMENT AND PAYMENT

4.1 NO SEPARATE MEASUREMENT AND PAYMENT WILL BE MADE FOR ANY WORK COVERED BY THIS SECTION. THE COST OF THIS WORK SHALL BE CONSIDERED INCIDENTAL TO AND INCLUDED IN THE PRICES OF OTHER RELATED WORK PROVIDED IN THE SCHEDULE OF BID ITEMS.

END OF SECTION

SECTION 031113.19 - FALSEWORK

PART 1 GENERAL

1.1 SUMMARY

A. This Section includes general specifications for constructing and removing falsework.
B. The Contractor shall design, construct, and maintain falsework that:
   1. Is safe and adequate.
   2. Provides the necessary rigidity.
   3. Supports the loads imposed.
   4. Produces a finished structure that conforms to the lines and grades shown.

1.2 RELATED SECTIONS

A. Section 03 10 00, “Concrete Forming and Accessories”
B. Section 03 31 00, “Structural Concrete”

1.3 REFERENCES

A. The following publications form a part of this Specification to the extent referenced. The publications are referred to in the text by the basic designation only. The latest edition of the applicable publication in effect on the date the Project is advertised shall be used.
   1. American Institute of Steel Construction (AISC)
      a. AISC – Steel Design Manual, 15th Edition
   2. American Railway Engineering and Maintenance-of-Way Association (AREMA)
      a. Chapter 8 – Concrete Structures and Foundations
   3. American Society of Civil Engineers (ASCE)
      a. ASCE 7-16 – Minimum Design Loads and Associated Criteria for Buildings and Other Structures
   4. ASTM International (ASTM)
      a. ASTM A36 – Standard Specification for Carbon Structural Steel
   5. American Welding Society (AWS):
      a. AWS D1.1 – Structural Welding Code - Steel
      b. AWS D1.4 – Structural Welding Code - Steel Reinforcing Bars
      c. AWS D1.5 – Bridge Welding Code (Joint Publication with AASHTO), including Amendments
   6. California Building Code, 2016 Edition (CBC) with Amendments
      a. CBC 2022 Edition with Amendments
   7. State of California Department of Transportation (Caltrans):
      a. Caltrans – Falsework Manual
      b. Caltrans – Standard Specifications, Section 48 - Temporary Structures

1.4 DEFINITIONS

A. Engineer of Record (EOR/Falsework Engineer: The Contractor’s representative responsible for design of falsework and compliance with all codes and standards.
B. Independent Support System: Support system that is in addition to the falsework removal system employing methods of holding falsework from above by winches, hydraulic jacks with prestressing steel, HS rods, or cranes.
C. Previously Welded Splice: Splice made in a falsework member in compliance with AWS D1.1 or other recognized welding standard before NTP award.

1.5 SUBMITTALS

A. General

1. Submit a manufacturer's certificate for each delivery of structural composite lumber used in falsework.
2. Submit a manufacturer's certificate that certifies all components of the manufactured assemblies are used in compliance with the manufacturer's recommendations.
3. Submit manufacturer's data for manufactured assemblies to verify the manufacturer's recommendations or perform tests demonstrating adequacy of the proposed assemblies.
4. Submit field acceptance criteria for falsework piles with a calculated nominal resistance greater than 100 tons. Submit acceptance criteria before falsework erection is complete.
5. Submit a letter of certification for all falsework members with field welded splices. The letter must certify that all welding and non-destructive testing (NDT), including visual inspection, comply with the Contract and the welding standard shown on the shop Drawings. The letter must be signed by a Civil Engineer registered in the State of California. Submit the letter before placing any concrete on the falsework being certified.
6. Submit a welding certification for falsework members with previously welded splices. The certification must:
    a. Itemize testing, inspection methods, and acceptance criteria used.
    b. Include tracking and identifying documents for previously welded members.
    c. Be signed by a Civil Engineer registered in the State of California.
    d. Be submitted before erecting the members.
7. Falsework Engineer must issue a letter of certification stating that falsework is constructed as shown in the authorized shop drawings before concrete is placed. The certification must include any necessary testing to verify the ability of the falsework members to sustain the stresses required by the falsework design.
8. Submit a list of qualifying experience complete with references.

B. Basis of Design Summary Document
1. Provide a Falsework System Basis of Design Summary Document as a separate submission package, including the following specific information:
    a. Interpretation of design criteria extracted from the Construction Documents and any other documents including loading, allowable displacements, and monitoring requirements as defined by the Drawings and Technical Specifications.
    b. Required actions to be undertaken if monitored displacements of the falsework exceed allowable displacements as defined by the Drawings and in the Technical Specifications.
    c. Identification of all loading to be applied to falsework elements.
    d. Identification of locations where the loads from the falsework are supported by the ground.
    e. Summary of sequencing and timing requirements for coordination of construction operations with installation of the falsework system.
    f. Removal sequencing and timing coordinated with permanent structure construction.
    g. Summary of how falsework element locations have been coordinated with construction operations to allow installation of permanent structure.
    h. Summary of sequencing and timing requirements for coordination of falsework installation, maintenance, and removal with construction of the structures.
    i. Materials and processes utilized and field quality control procedures.
    j. Identify special testing and inspection services to be performed.
    k. Identify goals of and specific items flagged for special attention or monitoring by Falsework Engineer and structural observations performed by the Falsework Engineer.

C. Shop Drawings and Calculations
1. Submit shop drawings with supporting calculations for falsework.
2. Shop drawings and calculations must be signed and sealed by a Civil Engineer registered in the State of California.
3. Shop drawings and calculations for falsework piles with a calculated loading capacity greater than 100 tons must be designed by a Civil Engineer registered in the State of California.
4. Falsework drawings and calculations shall include the following:
    a. Details of erection and removal activities.
    b. Methods and sequences of erection and removal, including equipment.
    c. Details for the stability of falsework during all stages of erection and removal activities.

d. Superstructure placing diagram showing concrete placing sequence and construction joint locations. If a schedule for placing concrete is shown, no deviation is allowed.
e. Assumed soil-bearing values for falsework footings.
f. Maximum horizontal distance falsework piles may be pulled for placement under caps.
g. Maximum deviation of falsework piles from vertical.
h. Anticipated total falsework and form settlements, including footing settlement and joint take-up.
i. Grade (E-value), species, and type of any structural composite lumber. Include manufacturer's tabulated working stress values for the lumber.
j. Design calculations including stresses and deflections in load carrying members.
k. Provisions for complying with temporary bracing requirements.
l. Welding standard used for welded members.

5. If the Contractor submits additional submittals before review of a previous submittal is complete, the Contractor must designate a review sequence for submittals.
6. Shop drawings and calculations for falsework removal systems employing methods of holding falsework from above by winches, hydraulic jacks with prestressing steel, HS rods, or cranes must include:
   a. Design code used for the analysis of the structural members of the independent support system.
   b. Provisions for complying with current Cal/OSHA requirements.
   c. Load tests and ratings within 1 year of intended use of hydraulic jacks and winches.
   d. Location of the winches, hydraulic jacks with prestressing steel, HS rods, or cranes.
   e. Analysis showing that the bridge deck and overhang are capable of supporting all loads at all times.
   f. Analysis showing that winches will not overturn or slide during all stages of loading.
   g. Location of deck and soffit openings if needed.
   h. Details of repair for the deck and soffit openings after falsework removal.

D. Qualifying Experience:
   1. Provide qualifying experience and references as identified in PART 1, Article 1.06 of this Section.

1.6 QUALIFICATIONS

A. The term "Falsework Trade Contractor" in this Section refers to any or all parties providing materials, fabrication, or installation of falsework components. This includes, but is not limited to, the following parties regardless of the method of the Contract utilized for engaging services: Falsework Fabricator(s), Falsework Erector(s), or other subcontractor(s) performing the Work of this Section.

B. The Falsework Trade Contractor, including on-site supervisors and key operating engineers, shall have least 10 years of comparable experience in installation of this type including at least 3 falsework jobs of similar scope performed in a dense urban setting.

C. The Falsework Trade Contractor shall employ a Professional Civil Engineer registered in the State of California to provide general oversight and management of the Falsework Trade Contractor's falsework work on this Project. The Falsework Trade Contractor's Professional Engineer shall be present at the Site on a periodic basis as required. The Falsework Trade Contractor may not use consultants or manufacturer's representatives to meet this requirement. The Professional Engineer providing this oversight shall have least 10 years of comparable experience in installations of this type including at least 3 falsework jobs of similar scope performed in a dense urban setting. This Professional Engineer providing these oversight services is subject to approval to provide these services by the Engineer.

D. The Contractor shall engage a Falsework Engineer that is a Professional Civil or Structural Engineer registered in California for design of the falsework. The Falsework Engineer shall have a minimum of 10 years of experience in installation of this type including at least 3 falsework system projects of similar scope in a dense urban setting. The EOR/Falsework Engineer is subject to approval by the Engineer. The Contractor shall not change or otherwise substitute EOR/Falsework Engineer during the work without the written approval of the Engineer. In addition to the Falsework Trade Contractor's Professional Engineer providing general oversight and management, the Falsework Trade Contractor shall retain the services of a Professional Civil or Structural Engineer registered in the State of California to be the Engineer of Record (EOR/Falsework Engineer) for the falsework.

1.7 QUALITY CONTROL

A. The EOR/Falsework Engineer shall visit the Site at least once a week during placement of the falsework to provide structural observation in accordance with California Building Code (CBC). The Falsework Engineer shall issue a written report for each Site visit.

B. The Contractor shall retain a Special Inspector who is experienced in the type of construction and testing to perform special inspections required in the submitted and approved Falsework Construction Drawings, Technical Specifications, and associated Construction Documents.

C. Welding and Nondestructive Testing

1. Welding must comply with AWS D1.1 or other recognized welding standard except for fillet welds where the load demands are 1,000 pounds or less per inch for each ⅛ inch of fillet weld, or for manufactured assemblies.
2. Perform NDT on welded splices using UT or RT. Each weld and any repair made to a previously welded splice must be tested. The Contractor must select locations for testing. The length of a splice weld where NDT is to be performed must be a cumulative weld length equal to 25 percent of the original splice weld length. The cover pass must be ground smooth at test locations. Acceptance criteria must comply with the specifications for cyclically loaded nontubular connections subject to tensile stress in Clause 6 of AWS D1.1. If repairs are required in a portion of the weld, perform additional NDT on the repaired sections. The NDT method chosen must be used for an entire splice evaluation, including any repairs.
3. For previously welded splices, the Contractor must perform and document all necessary testing and inspection required to certify the ability of the falsework members to sustain the design stresses.

1.8 DESIGN CRITERIA

A. General

1. Design falsework to resist the sum of the dead and live vertical loads and an assumed horizontal load per the Caltrans Falsework Manual and applicable codes.
2. Anticipated falsework settlement must not exceed 0.5 inch at any location.
3. Design footings and/or piles to carry the imposed loads without exceeding the estimated geotechnical capacities provided or anticipated settlements.
4. For individual towers with maximum leg loads exceeding 30 kips, design foundations to provide uniform settlement under all legs of each tower.
5. Temporary bracing must be designed to withstand all imposed loads during erection, construction, and removal of any falsework. Wind loads must be included in the design of the bracing or methods.
6. The use of driven piles is not acceptable.
7. Falsework removal system employing methods of holding falsework from above and members of the independent support system must support the sum of the actual vertical and horizontal loads due to falsework materials, equipment, construction sequence or other causes, and wind loading. Identifiable mechanical devices used in the falsework removal plan must meet applicable industry standards and manufacturer instructions for safe load carrying capacity. Unidentifiable winches must be capable of carrying twice the design load.
8. The load used for the analysis of overturning moment and sliding of the winch system must be 150 percent of the design load.

B. Loads

1. The design load for falsework must consist of dead and live vertical loads, and an assumed horizontal load. The minimum total design load for any falsework is 100 psf for the combined live and dead load.
2. Dead loads must include the weight of concrete, reinforcing steel, forms, and falsework. Loads due to concrete, reinforcing steel, and forms must be assumed to be at least 160 pcf for normal concrete.
3. Live loads must include:
   a. Actual weight of any equipment to be supported by the falsework applied as concentrated loads at the points of contact.
   b. Uniform load of at least 20 psf applied over the area supported by the falsework.
   c. Load of 75 lbs./ft applied at the outside edge of deck overhangs.

4. The falsework must resist an assumed horizontal load equal to the sum of the actual horizontal loads due to equipment, construction sequence or other causes, and wind loading. The horizontal load in any direction must be at least 2 percent of the total dead load.
5. Wind loading shall be calculated in accordance with ASCE 7-16 and shall be assumed to come from any horizontal direction.
6. Design the falsework with sufficient rigidity to resist the assumed horizontal load without considering the concrete load.

C. Stresses, Loadings, and Deflections

1. General
   a. Maximum allowable stresses and loadings specified in this section are based on the use of undamaged high-quality materials. Reduce stresses and loadings for materials of lesser quality.
2. Timber
   a. Design timber connections in accordance with the Caltrans Falsework Manual.
   b. The maximum allowable stresses and loadings for timber are as shown in the following table:

Quality Characteristic	Requirement
Compression perpendicular to the grain (psi)	450
Compression parallel to the grain (psi)	480,000/(L/d)2; 1,600 maximum
Flexural stress	1,800 psi; 1,500 psi maximum for members with a nominal depth of 8 inches or less
Horizontal shear (psi)	140
Axial tension (psi)	1,200
Modulus of elasticity (E) (psi)	1.6 × 106
Timber piles (tons)	45
NOTES: L = unsupported length, inches d = least dimension of a square or rectangular column or the width of a square of equivalent cross-sectional area for round columns, inches a Irrespective of deflection compensated for in camber strips	

   c. Deflection due to concrete loading shall not exceed 1/240 of the span length.
3. Steel
   a. Except for flexural compressive stresses, design stresses for identified grades of steel must not exceed stresses specified in the AISC Steel Manual.
   b. Except for flexural compressive stresses, design stresses for unidentified steel must not exceed those specified for steel complying with ASTM A36 in the AISC Steel Design Manual or the following:

Property	Requirement
Tension, axial and flexural	22,000 psi
Compression, axial	16,000 - 0.38(L/r)2 psia
Shear on gross section of web of rolled shapes	14,500 psi
Web yielding for rolled shapes	27,000 psi
Modulus of elasticity (E)	30 × 106 psi
NOTES: L = unsupported length, inches; r = radius of gyration of the member, inches aL/r must not exceed 120	

   c. Design stresses and deflections for all grades of steel must not exceed the following:

Property	Requirement
Compression, flexural	12,000,000/((L × d)/(b × t)) psia
Deflection due to concrete loading only	1/240 of the spanb
Modulus of elasticity (E)	30 × 106 psi
NOTES: L = unsupported length, inches; d = least dimension of rectangular columns or the width of a square of equivalent cross-sectional area for round columns, or the depth of beams, inches; b = width of the compression flange, inches; t = thickness of the compression flange, inches; Fy = specified minimum yield stress in psi aNot to exceed (1) 22,000 psi for unidentified steel, (2) 22,000 psi for steel complying with ASTM A36, or (3) 0.6Fy for other identified steel bDo not include deflection compensated for in camber strips.	

d. Manufactured Assemblies:
   1) Do not exceed the manufacturer's recommendations for loadings and deflections on jacks, brackets, columns, joists, and other manufactured devices, except the dead load deflection of joists at locations other than under deck slabs between girders must not exceed 1/240 of their spans.

e. Special Locations:
   1) Mechanically connect: (1) exterior falsework stringers, (2) stringers adjacent to the ends of discontinuous caps, (3) stringers over points of minimum vertical clearance, and (4) every fifth remaining stringer to the falsework cap or framing. Mechanical connections must resist at least a 500-pound load in any direction, including uplift on the stringer.
   2) Connect timber bracing to falsework using at least ⅝-inch-diameter bolts or coil rod with a root diameter equal to that of the shank of a ⅝-inch-diameter bolt.
   3) Falsework member clearances must be at least those shown in the following table:

Falsework member	Clearances	
	To railing members, barriers, and anchored temporary railings	To unanchored temporary railings
Footings	0 feet, 3 inches	2 feet, 0 inches
Piles	1 foot, 0 inches	2 feet, 9 inches
Other members	2 feet, 0 inches	2 feet, 9 inches

1.9 QUALITY ASSURANCE BY THE ENGINEER

A. The falsework, at the discretion of the Engineer, may be inspected by a Special Inspector hired by the City. The Special Inspector shall observe the Work for conformance with the approved shop drawings. Avoiding hazardous situation(s) is the sole responsibility of the Contractor; however, the Special Inspector shall have the authority to stop Work in the event a potentially hazardous situation persists after the Contractor was put on notice. The Contractor shall cooperate and comply with the Special Inspector at all times.

1.10 PRE-DESIGN AND DESIGN KICKOFF MEETINGS

A. Pre-design meetings must be conducted as required to coordinate all aspects of the falsework system design with planned construction operations. The pre-design meeting must, as a minimum, be attended by Falsework Engineer for the Falsework System, falsework trade contractor, Contractor, and Engineer. The Falsework Engineer must coordinate with the Engineer to clearly define the required lane closure configurations to accommodate falsework over a local street.

B. A Design Kickoff Meeting must be conducted to provide a review by the parties performing design of the approved Basis of Design Summary Document, from PART 1, Article 1.05.B of this Section. The Design Kickoff Meeting must, as a minimum, be attended by the Falsework Engineer, falsework trade contractor, Contractor, and Engineer.

1.11 PRE-INSTALLATION MEETINGS

A. A Pre-Installation Meeting shall be conducted as required to clarify and coordinate the falsework design with planned construction operations.

B. Coordination meetings shall confirm and establish details of the construction requirements for the Work; coordinate the construction schedule; coordinate construction activities; confirm responsibilities among the Contractor, falsework trade contractor, and other subcontractors, particularly responsibilities pertaining to falsework support, observation, testing, falsework position and alignment survey control, movement monitoring, and contingency procedures for excessive movements.

PART 2 PRODUCTS

2.1 MANUFACTURED ASSEMBLIES

A. EFCO, DOKA, PERI, RMD KWIKFORM, MASCO, SYMONS, WACO, WADCO, or approved equal.

PART 3 EXECUTION

3.1 GENERAL

A. Install temporary bracing as designed to withstand all imposed loads during erection, construction, and removal of any falsework.

B. The materials used in the falsework construction must be of the quality necessary to sustain the stresses required by the falsework design.

C. Install all temporary railing protecting falsework before erecting falsework. Do not remove temporary railing until authorized.

3.2 FOUNDATIONS

A. Construct falsework on solid footings or ground capable of supporting falsework loads. Protect footings or ground from softening and undermining.

B. The Contractor may place falsework foundation pads and piles before shop drawings are authorized.

C. Falsework piles, where deemed necessary by the Contractor, shall be designed to support the load falsework loads and satisfy the displacement/settlement limitations noted in PART 1, Article 8“DESIGN CRITERIA” of this Section.

3.3 ERECTION

A. Construct falsework to support the loads imposed without settlement or take-up beyond that shown on the Falsework Drawings.

B. Install the final bracing system before placing falsework members above stringers.

C. If falsework is over or adjacent to roadways, all details of the falsework system that contribute to horizontal stability and resistance to impact, except for bolts in bracing, must (1) be installed at the time each element of the falsework is erected and (2) remain in place until the falsework is removed.

D. If ordered, use camber strips to compensate for falsework deflection, vertical alignment, and anticipated structure deflection. Refer to the Drawings for the amount of camber to be used in constructing falsework.

E. Install tell-tales that (1) are attached to the soffit forms and (2) can be read from the ground. Provide sufficient tell-tales to allow the total settlement where concrete is being placed to be determined.

F. Do not apply dead loads other than forms and reinforcing steel to falsework until authorized by the Falsework Engineer.

G. If (1) events occur that the Engineer determines will result in a structure that does not comply with the structure as described or (2) settlements occur that are more than ± ⅜ inch greater than those shown on the Falsework Drawings, stop concrete placement and employ corrective measures satisfactory to the Engineer. If satisfactory measures are not provided before initial concrete set occurs, stop concrete placement at a location ordered.

3.4 REMOVAL

A. Remove falsework such that portions of falsework not yet removed remain stable at all times.
B. Release falsework supporting spans before constructing or installing railings or barriers on the spans unless authorized.
C. Falsework removal employing methods of holding falsework by winches, hydraulic jacks with prestressing steel, HS rods, or cranes must also be supported by an independent support system when the system is not actively lowering the falsework at vehicular, pedestrian, or railroad traffic openings.
D. Anchor 10-inch-square aluminum or galvanized steel wire, ¼-inch-mesh hardware cloth with a 0.025-inch minimum wire diameter firmly to the inside of the soffit openings. Construct a ½-inch drip groove to the outside of soffit openings.

PART 4 MEASUREMENT AND PAYMENT

4.1 FALSEWORK AS SPECIFIED HEREIN SHALL BE INCLUDED IN THE MEASUREMENT AND PAYMENT FOR “PUMP STATION” AS DESCRIBED IN SECTION 03 30 00.

A. No separate measurement and payment will be made for any other Work covered by this Section. The cost of any other Work shall be considered incidental.

END OF SECTION

SECTION 031516 - CONCRETE CONSTRUCTION JOINTS

PART 1 GENERAL

1.1 SUMMARY

A. This Section includes:
   1. Installation of concrete control and construction joint filler material to interior, exposed industrial concrete slabs.

1.2 RELATED SECTIONS:

A. Section 01 33 00, “Submittal Procedures”
B. Section 03 30 00 “Cast-in-Place Concrete”

1.3 REFERENCES

A. The following publications form a part of this Specification to the extent referenced. The publications are referred to in the text by the basic designation only. The latest edition of the applicable publication in effect on the date the Project is advertised shall be used.
B. Reference Standards:
C. The date of the standard is that in effect as the date of receipt of bids for the Project.
   1. American Concrete Institute (ACI):
      a. ACI 302.1R – Guide to Concrete Floor and Slab Construction.
   2. ASTM International (ASTM):
      a. ASTM D412 – Standard Test Methods for Vulcanized Rubber and Thermoplastic Elastomers – Tension.
      b. ASTM D624 – Standard Test Method for Tear Strength of Conventional Vulcanized Rubber and Thermoplastic Elastomers.
      c. ASTM D1308 – Standard Test Method for Effect of Household Chemicals on Clear and Pigmented Organic Finishes.
      d. ASTM D2240 – Standard Test Methods for Rubber Property – Durometer Hardness.

1.4 SUBMITTALS

A. Certificates:
   1. Certificates by the manufacturer stating that the installer is an approved installer and has completed the necessary training.
B. The Contractor shall submit to the Engineer for approval, individual product data for each material or equipment listed below:
   1. Industrial concrete floor joint filler.
   2. Interior concrete floor joint filler.
C. VOC Certification: Submit certification that products furnished comply with regulations controlling use of volatile organic compounds (VOC).

1.5 QUALITY ASSURANCE

A. Installer Qualifications:
   1. The installer must be certified by the manufacturer in the installation of semi-rigid fillers on exposed concrete floors.
   2. The installer shall have successfully performed a minimum of 5 projects of similar scope and complexity.
   3. The installer must use proper equipment to perform Work within scope of this Project, as recommended by the manufacturer.

1.6 DELIVERY, STORAGE, AND HANDLING

A. Comply with the manufacturer's written instructions for minimum and maximum temperature requirements and other conditions for storage.

B. Deliver materials in original containers, with seals unbroken, bearing manufacturer labels indicating brand name and directions for storage.

1.7 FIELD CONDITIONS

A. Environmental Limitations: Do not apply when air and substrate temperatures are outside limits permitted by manufacturer's written instructions.

B. Do not apply joint filler material to concrete that does not comply with the manufacturer's published instructions and ACI 302.1R.

1. Do not apply to wet concrete.

2. Allow adequate time for concrete to cure before application of joint filler material.

C. Close areas to traffic during and after application for time period as recommended in writing by manufacturer.

PART 2 PRODUCTS

2.1 MANUFACTURER

A. HI-TECH Systems, or approved equal

2.2 MATERIALS

A. Industrial concrete floor joint filler: Self-leveling, 100 percent solids, two-component polyurea elastomer joint filler material shall be:

1. HT-PE85MI Polyurea Elastomer Joint Filler, manufactured by HI-TECH Systems, or approved equal.

2. Subject to compliance with the following requirements:

a. Comply with national, state and district AIM VOC regulations.

b. Type A shore hardness of at least 85 when tested in accordance with ASTM D2240.

c. Elongation: Minimum 150 percent when tested in accordance with ASTM D412.

d. Tensile strength: Minimum 1,100 psi when tested in accordance with ASTM D412.

e. Tear Strength, Die B: Minimum 148 psi when tested in accordance with ASTM D624.

f. Stain Resistance: Achieve limited or no discoloration when tested in accordance with ASTM D1308.

B. Interior concrete floor joint filler: Self-leveling, 100 percent solids, two-component polyurea elastomer joint filler material in shall be:

1. HT-PE85 FB Polyurea Elastomer Joint Filler, manufactured by HI-TECH Systems, or approved equal.

2. Subject to compliance with the following requirements:

a. Comply with national, State, and district AIM VOC regulations.

b. Type A shore hardness of at least 85 when tested in accordance with ASTM D2240.

c. Elongation: Minimum 150 percent when tested in accordance with ASTM D412.

d. Tensile strength: Minimum 1,100 psi when tested in accordance with ASTM D412.

e. Tear Strength, Die B: Minimum 148 psi when tested in accordance with ASTM D624.

f. Stain Resistance: Achieve limited or no discoloration when tested in accordance with ASTM D1308.

PART 3 EXECUTION

3.1 EXAMINATION

A. Verification of Conditions:
   1. Examine the slab and joint conditions and notify the Engineer in writing of any deficiencies.
   2. Concrete must be sound, clean, and free of dust, grease, curing compounds, waxes, and other contaminants that would adversely affect the quality or durability of the joint filler material.
   3. Work area must be free of obstructions.
   4. Work shall commence upon acceptance of the Project conditions.

3.2 PREPARATION

A. Surface Preparation:
   1. Run dry-cut, vacuum-equipped saw full depth of joint.
   2. Vacuum the joint thoroughly and ensure the joints are dry and free of debris.
   3. Do not proceed until unsatisfactory conditions have been corrected.

3.3 JOINT FILLER INSTALLATION

A. General: Comply with the manufacturer's written instructions for mixing, dispensing, and installation of the of joint filler material.
B. Apply joint filler material in joints with a width of 1 inch or less, slightly overfilling joint filler material.
C. Allow product to cure before shaving excess joint filler material. Ensure the joint filler material is flush with finished floor.

3.4 PROTECTION

A. Protect installed joint filler material for 1 hour prior to opening area to construction foot traffic and vehicles.

PART 4 MEASUREMENT AND PAYMENT

4.1 NO SEPARATE MEASUREMENT AND PAYMENT WILL BE MADE FOR ANY WORK COVERED IN THIS SECTION. THE COST OF THIS WORK SHALL BE CONSIDERED INCIDENTAL TO AND INCLUDED IN THE PRICES FOR OTHER RELATED WORK PROVIDED IN THE SCHEDULE OF BID ITEMS.

END OF SECTION

SECTION 031519 - CAST-IN CONCRETE ANCHORS

PART 1 GENERAL

1.1 SUMMARY

A. Section includes Requirements for all cast-in-place concrete anchor bolts, anchor rods, reinforcing anchorage adhesive, and post-installed concrete anchors required for the Project but not specified elsewhere in the Contract Documents.
   1. Design of all concrete anchors not indicated on the Drawings including, but not limited to, installation of anchors into concrete for the following structural and nonstructural components:
      a. Structural members and accessories.
      b. Metal, wood, and plastic fabrications.
      c. Architectural components.
      d. Mechanical and electrical equipment and components.
      e. Plumbing, piping, and HVAC work
      f. All other components requiring attachment to concrete.

1.2 RELATED SPECIFICATION SECTIONS INCLUDE BUT ARE NOT NECESSARILY LIMITED TO:

A. Section 01 81 10 – Wind and Seismic Criteria.
B. Section 03 05 05 –- Concrete Testing and Inspection.
C. Section 26 05 36 –- Cable Tray.
D. Section 40 05 07 –- Pipe Support SystemsHangers and Supports for Process Piping.

1.3 QUALITY ASSURANCEREFERENCES

A. The following publications form a part of this Specification to the extent referenced. The publications are referred to in the text by the basic designation only. The latest edition of the applicable publication in effect on the date the Project is advertised shall be used.
   1. American Concrete Institute (ACI):
      a. 318, Building Code Requirements for Structural Concrete and Commentary.
      b. 355.2, Seismic Testing of Post-Installed Concrete and Masonry Anchors in Cracked Concrete.
      c. 355.4, Qualification of Post-Installed Adhesive Anchors in Concrete.
   2. American Concrete Institute/Concrete Reinforcing Steel Institute (ACI-CRSI):
      a. Adhesive Anchor Installation Certification Program: Adhesive Anchor Installer.
   3. American Institute of Steel Construction (AISC):
      a. 303, Code of Standard Practice for Steel Buildings and Bridges.
   4. ASTM International (ASTM):
      a. A36, Standard Specification for Carbon Structural Steel.
      b. A108, Standard Specification for Steel Bar, Carbon and Alloy, Cold-Finished.
      c. A123, Standard Specification for Zinc (Hot-Dip Galvanized) Coatings on Iron and Steel Products.
      d. A153, Standard Specification for Zinc Coating (Hot-Dip) on Iron and Steel Hardware.
      e. A307, Standard Specification for Carbon Steel Bolts and Studs, 60,000 psi Tensile Strength.
      f. A496, Standard Specification for Steel Wire, Deformed, for Concrete Reinforcement.
      g. A563, Standard Specification for Carbon and Alloy Steel Nuts.
      h. A780, Standard Practice for Repair of Damaged and Uncoated Areas of Hot-Dip Galvanized Coatings.
      i. F436, Standard Specification for Hardened Steel Washers.
      j. F593, Standard Specification for Stainless Steel Bolts, Hex Cap Screws, and Studs.
      k. F594, Standard Specification for Stainless Steel Nuts.
      l. F1554, Standard Specification for Anchor Bolts, Steel, 36, 55, and 105-ksi Yield Strength.

m. F2329, Standard Specification for Zinc Coating, Hot-Dip, Requirements for Application to Carbon and Alloy Steel Bolts, Screws, Washers, Nuts, and Special Threaded Fasteners

5. ICC Evaluation Service (ICC-ES):
   a. AC193, Acceptance Criteria for Mechanical Anchors in Concrete Elements.
   b. AC308, Acceptance Criteria for Post-Installed Adhesive Anchors in Concrete Elements.

1.4 QUALITY ASSURANCE

A. Qualifications:
   1. Anchor designer for Contractor-designed post-installed anchors and cast-in-place anchorage shall be a Professional Civil Engineer licensed in California.
   2. Installer for post-installed anchors shall be trained by the manufacturer or certified by a training program approved by the Engineer.

B. Post-installed anchors and related materials shall be listed by the following agencies:
   1. ICC-ES.
   2. Engineer-approved equivalent.

1.5 DEFINITIONS

A. Adhesive Anchors:
   1. Post-installed anchors developing their strength primarily from chemical bond between the concrete and the anchor.
   2. Includes anchors using acrylics, epoxy, and other similar adhesives.

B. Anchor Bolt: Any cast-in-place anchorage that is made of a headed (i.e., bolt) material.

C. Anchor Rod: Any cast-in-place or post-installed anchorage made from unheaded, threaded, rod, or deformed bar material.

D. Concrete Anchor: Generic term for either an anchor bolt or an anchor rod.

E. Galvanizing: Hot-dip galvanizing per ASTM A123, ASTM A153, or ASTM F2329 with minimum coating of 2.0 oz of zinc per square foot of metal (average of specimens) unless noted otherwise or dictated by standard.

F. Hardware: As defined in ASTM A153

G. Installer or Applicator:
   1. Installer or applicator is the person actually installing or applying the product in the field at the Project Site.
   2. Installer and applicator are synonymous.

H. Mechanical Anchors:
   1. Post-installed anchors developing their strength from attachment other than through adhesives or chemical bond to concrete.
   2. Includes expansion anchors, expansion sleeve, screw anchors, undercut anchors, specialty inserts, and other similar types of anchorages.
   3. Drop-in anchors and other similar non-ICC ES approved anchors are not allowed.

I. MPII: Manufacturer’s printed installation instructions.

J. Post-Installed Anchor: Any adhesive or mechanical anchor installed into previously placed and adequately cured concrete.

1.6 SUBMITTALS

A. The Contractor shall submit individual product data for each material or equipment listed below:
   1. Post-Installed Mechanical and Adhesive Concrete Anchors.
   2. Headed Studs.
   3. Deformed Bar Anchors.
   4. Washers.
   5. Nuts.
   6. Galvanizing Repair Paint.
   7. Dissimilar Materials Protection.
   8. Engineer Designed Anchorage – Mechanical Anchors.

9. Engineer Designed Anchorage – Adhesive Concrete Anchors.
10. Engineer Designed Anchorage – Concrete Screw Anchors.

B. Shop Drawings:
1. Product technical data including:
a. Acknowledgement that submitted products meet requirements of referenced standards.
b. Manufacturer material data sheet for each anchor.
1) Clearly indicate which products on the data sheet are proposed for use on the Project.
c. Manufacturer's printed installation instructions.
d. Current ICC-ES report for each post-installed anchor system indicating the following:
1) Certification that anchors meet all requirements indicated in this Specification.
2) Performance data showing that anchor is approved for use in cracked concrete.
3) Seismic design categories for which the anchor system has been approved.
4) Required installation procedures.
5) Special inspection requirements for installation.
e. Contractor-Designed Anchors:
1) Show diameter and embedment depth of each anchor.
2) Indicate compliance with ACI 318, Chapter 17
3) Design tension and shear loads used for anchor design.
4) Engineering design calculations:
(a) Indicate design load to each anchor.
(b) Develop anchor forces based on Design Criteria listed herein and/or the manufacturer's design information.
(c) Sealed and signed by the Contractor's Professional Structural Engineer.
(d) Calculations shall be submitted for information purposes only.
5) Provide torque values where pipe sleeves anchors are used.
f. Anchorage layout drawings and details:
1) Indicate anchor diameter, embedment, length, anchor type, material, and finish.
2) Drawings showing location, configuration, spacing, and edge distance.
3) Type of post-installed anchor system used.
(a) Provide manufacturer's ICC-ES report for the following:
(1) Mechanical anchorage per ICC-ES AC193.
(2) Adhesive anchorage per ICC-ES AC308.

C. Samples:
1. Representative samples of concrete anchors may be requested by the Engineer. Review shall be for type and finish only. Compliance with all other requirements is exclusively the responsibility of the Contractor.

D. Informational Submittals:
1. Certification of qualifications for each installer of post-installed anchors.
a. Indicate successful completion or certification for each type of approved post-installed anchor as required by the Contract Documents.
b. Provide the following for each type of anchor, as required by this Specification Section:
1) Letter from the manufacturer documenting successful training completion.

1.7 DELIVERY, STORAGE, AND HANDLING

A. Deliver products to the Job Site in manufacturer's or distributor's packaging undamaged and complete with installation instructions.
B. Store above ground on skids or other supports to keep items free of dirt and other foreign debris and to protect against corrosion.
C. Protect and handle materials in accordance with the manufacturer's recommendations to prevent damage or deterioration.

PART 2 PRODUCTS

2.1 MATERIALS

A. Cast-in-place Concrete Anchors:
   1. Building and nonbuilding structures, unless otherwise specified:
      a. ASTM F1554, Grade 36 or Grade 55 with weldability supplement S1 for galvanized threaded rods.
      b. ASTM A307, Grade A for galvanized headed bolts.
      c. For submerged or used in enclosed tankage, ASTM F593, Type 316.
   2. All other cast-in-place concrete anchors for equipment:
      a. Stainless steel with matching nut and washer.
      b. Submerged application: ASTM F593, Type 316.
      c. Non-submerged application: ASTM F593, Type 304 or Type 316 anchors and washers.
      d. Nuts for non-submerged applications, ASTM563 and coated after torqued.
B. Post-Installed Mechanical and Adhesive Concrete Anchors:
   1. Stainless steel with matching nut and washer.
   2. Submerged application: ASTM F593, Type 316.
   3. Non-submerged application: ASTM F593, Type 304 or Type 316, with ASTM A563 nuts coated after torquing.
C. Reinforcement: See Section 03 20 00, “Concrete Reinforcing.”
D. Headed Studs: ASTM A108 with a minimum yield strength of 50,000 psi and a minimum tensile strength of 60,000 psi.
E. Deformed Bar Anchors: ASTM A496 with minimum yield strength of 70,000 psi and a minimum tensile strength of 80,000 psi.
F. Washers:
   1. ASTM F436 unless noted otherwise, finish to match bolt.
   2. If stainless steel anchorage is being used for cast-in-place anchorage, furnish washers of the same material and alloy as in the accompanying anchorage.
   3. Plate washers: Minimum 1/2 inch thick fabricated ASTM A36 square plates as specified or required.
   4. Follow manufacturer’s requirements for all post-installed anchorage.
G. Nuts:
   1. ASTM A563 for all cast-in-place anchorage.
   2. If stainless-steel anchorage is being used for cast-in-place anchorage in submerged or enclosed tankage, nuts shall meet ASTM F594 and be the matching material and alloy as in the accompanying anchorage.
   3. Follow manufacturer’s requirements if using post-installed anchorage.
H. Galvanizing Repair Paint:
   1. High zinc dust content paint for regalvanizing welds and abrasions.
   2. ASTM A780.
   3. Zinc content: Minimum 92 percent in dry film.
   4. ZRC “ZRC Cold Galvanizing” or Clearco “High Performance Zinc Spray”, or approved equal.
I. Dissimilar Materials Protection: See Specification Section 09 96 00, “High-Performance Coatings.”

2.2 CONTRACTOR DESIGNED ANCHORAGE

A. Manufacturers:
   1. Post-installed anchor systems for the listed manufacturers shall be considered only if a current ICC-ES evaluation report is submitted in accordance with the Submittals Article of this Specification Section and if the anchor system is approved by the Engineer.
      a. Hilti
      b. Dewalt
      c. Simpson Strong-Tie, or approved equal.

B. Design the anchorage when any of the following occur:
   1. Design load for concrete anchorage is shown on the Drawings.
   2. When specifically required by the Contract Documents.
   3. When an anchorage is required but not specified in the Drawings.
C. Anchorage Design Loads:
   1. Determine all of the design loads, including wind and seismic loads, per the building code. Additionally, a specialty engineer is required to incorporate all static and dynamic loading forces established by the equipment manufacturer, where required for equipment.
      a. Anchorage of equipment and non-structural components: Use the actual dead and operating loads provided by the manufacturer.
D. When Contract Drawings indicate an anchor diameter or length, design shall incorporate these as “minimums.” Design these anchors and provide all necessary documentation as required herein.
E. Cast-in-Place Concrete Anchors:
   1. Provide the material, nominal diameter, embedment length, spacing, edge distance and design capacity to resist the calculated load based on the requirements given in the building code including ACI 318, Chapter 17.
   2. Design assuming cracked concrete.
F. Post-installed Concrete Anchors:
   1. Provide the manufacturer’s system name/type, nominal diameter, embedment depth, spacing, minimum edge distance, cover, and design capacity to resist the calculated load based on requirements given in the Building Code, ACI 318, Chapter 17 and current ICC-ES report, for the anchor to be used.
   2. Design assuming cracked concrete.

2.3 ENGINEER-DESIGNED ANCHORAGE

A. When the size, length and details of anchorages are shown on Contract Structural Drawings, Contractor design of anchorage is not required.
B. Manufacturers:
   1. Additional newer post-installed anchor systems from the listed manufacturers shall be considered only if a current evaluation agency report is submitted in accordance with Article “Submittals” of this Specification Section, the anchor system is certified by ICC-ES for cracked concrete conditions, and if approved by the Engineer.
   2. Mechanical Anchors:
      a. Hilti, or approved equal:
         1) Kwik Bolt TZ (ICC-ES ESR-1917).
   3. Adhesive Concrete Anchors:
      a. Hilti, or approved equal:
         1) HIT HY-200 V3 (ICC ESR-4878)
   4. Concrete Screw Anchors:
      a. Hilti, or approved equal:
         1) Kwik HUS-EZ Screw (ICC-ES ESR-3027).
      b. Substitution request to indicate the proposed anchor has at least the same tension and shear strength as the specified anchor installed as indicated in the Contract Drawings.
      c. Calculations to be stamped by a Professional Engineer registered in California.

PART 3 EXECUTION

3.1 GENERAL

A. Cast-in-Place Anchorage:
   1. Use where anchor rods or bolts are indicated on the Drawings, unless another anchor type is approved by the Engineer.
   2. Provide concrete anchorage as shown on the Drawings or as required to secure components to concrete.

B. Adhesive Anchorage:
   1. Use only where specifically indicated on the Drawings or when approved for use by the Engineer.
   2. May be used where subjected to vibration or where buried or submerged.
   3. Do not use in overhead applications or sustained tension loading conditions such as utility hangers.
   4. Contact the Engineer for approval when anchors will not be installed in compliance with MPII.
C. Mechanical Anchorage:
   1. Use only where specifically indicated on the Drawings or when approved for use by the Engineer.
   2. Do not use where subjected to vibration.
   3. May be used in overhead applications.
   4. Contact the Engineer for clarification when anchors will not be installed in compliance with the manufacturer's printed installation requirements.
D. Do not use powder-actuated fasteners and other types of bolts and fasteners not specified herein for structural applications unless approved by the Engineer or specified in Contract Documents.

3.2 PREPARATION

A. Provide adequate time to allow for proper installation and inspection prior to placing concrete for cast-in-place concrete anchorage.
B. Prior to installation, inspect and verify areas and conditions under which concrete anchorage is to be installed.
   1. Notify the Engineer of conditions detrimental to proper and timely completion of Work.
   2. Do not proceed with Work until unsatisfactory conditions have been corrected in a manner acceptable to the Engineer.
C. Special Inspection is required in accordance with the Building Code for all concrete anchorage.
   1. Notify the Engineer to coordinate Special Inspection so that an inspection is required prior to concrete placement (or during post-installed anchorage installation).
   2. See Article "Field Quality Control" of this Specification Section for additional requirements.
D. Post-installed anchor manufacturer's representative shall demonstrate and observe the proper installation procedures for the post-installed anchors at no additional expense to the City.
   1. Follow such procedures to ensure acceptable installation.
   2. Adhesive anchors must be installed in concrete aged a minimum of 21 days.

3.3 INSTALLATION

A. Tie cast-in-place anchorage in position to embedded reinforcing steel using wire.
   1. Tack welding of anchorage is prohibited.
   2. Chase threads as required and coat the projected portion of carbon steel anchors and nut threads with a heavy coat of clean grease after concrete has cured.
   3. Anchorage location tolerance shall be in accordance with AISC 303.
   4. Provide steel or durable wood templates for all column and equipment anchorage.
      a. Templates to be placed above top of concrete and not impede proper concrete placement and consolidation.
B. Unless noted or specified otherwise:
   1. Connect aluminum and steel members to concrete and masonry using stainless-steel cast-in-place anchorage unless shown otherwise.
      a. Provide dissimilar materials protection per Specification Section 09 96 00.
   2. Provide washers for all anchorage.
   3. Where exposed, extend threaded anchorage a maximum of 3/4 inch above the top of the fully engaged nut.
      a. If anchorage is cut off to the required maximum height, threads must be dressed to allow nuts to be removed without damage to the nuts.
C. Do the following after nuts are snug-tightened down:
   1. If using post-installed anchorage, follow MPII.
   2. Upset threads of anchorage to prevent nuts from backing off.
      a. Provide double nut or lock nut in lieu of upset threads for items that may require removal in the future.

3. For all other cast-in-place anchorage material, tighten nuts down an additional 1/8 turn beyond snug tight to prevent nuts from backing off.
4. If two nuts are used per concrete anchor above the base plate, tighten the top nut an additional 1/8 turn to “lock” the two nuts together.
5. If using post-installed anchorage, follow MPII.

D. Ensure that embedded items are protected from damage and are not filled in with concrete.

E. Secure architectural components such that it will not be aesthetically distorted and fasteners will not be overstressed from expansion, contraction, or installation.

F. Coat aluminum surfaces in contact with dissimilar materials in accordance with Specification Section 09 96 00, “High-Performance Coatings.”

G. Repair damaged galvanized surfaces in accordance with ASTM A780.
1. Prepare damaged surfaces by abrasive blasting or power sanding.
2. Apply galvanizing repair paint to minimum 6 mils DFT in accordance with the manufacturer’s instructions and ASTM A780.

H. For post-installed anchors, comply with the MPII on the hole diameter and depth required to fully develop the tensile strength of the anchor or reinforcing bar.
1. Use hammer drills to create holes.
2. Properly clean out the hole per the ICC-ES reports utilizing a non-metallic fiber bristle brush and compressed air or as otherwise required to remove all loose material from the hole prior to installing the anchor in the presence of the Special Inspector.

3.4 FIELD QUALITY CONTROL

A. Special Inspection:
1. See Section 01 45 33.
2. See Section 03 05 05.

B. Field Inspection and Testing
1. The City reserves the right to inspect and test completed anchorage at a minimum of 10 percent% (for large quantity) to 25% percent (smaller quantity) to 100 percent% (very small project quantity)Engineer’s discretion.
2. Such testing shall conform to requirements of ACI 355.2 and/or ACI 355.4 as applicable.
3. Failed anchors shall be satisfactorily replaced at no cost to the City.

3.5 CLEANING

A. After concrete has been placed, remove protection, and clean all anchorage of all concrete, dirt, and other foreign matter.

B. Provide surface acceptable to receive field applied paint coatings.

PART 4 MEASUREMENT AND PAYMENT

4.1 NO SEPARATE MEASUREMENT AND PAYMENT WILL BE MADE FOR ANY WORK COVERED IN THIS SECTION. THE COST OF THIS WORK SHALL BE CONSIDERED INCIDENTAL TO AND INCLUDED IN THE PRICES FOR OTHER RELATED WORK PROVIDED IN THE SCHEDULE OF BID ITEMS.

END OF SECTION

SECTION 032000 - CONCRETE REINFORCING

PART 1 GENERAL

1.1 SUMMARY

A. The Contractor shall design, furnish, fabricate, and place concrete reinforcing and other related Work complete, as indicated on the Drawings and as specified.

B. Section includes:

1. Reinforcing steel for cast-in-place concrete.
2. Supports and accessories for steel reinforcement.

1.2 RELATED SECTIONS

A. Section 01 33 00, “Submittal Procedures”

B. Section 03 10 00, “Concrete Forming and Accessories”

C. Section 03 30 00, “Cast-in-Place Concrete”

1.3 REFERENCES

A. The following publications form a part of this Specification to the extent referenced. The publications are referred to in the text by the basic designation only. The latest edition of the applicable publication in effect at the time the Contract is awarded shall be used.

1. American Association of State and Highway Transportation Officials (AASHTO):
   a. M31M/M31 – Standard Specification for Deformed and Plain Carbon-Steel Bars for Concrete Reinforcement.
   b. AASHTO Standard Specifications for Welding of Structural Steel Highway Bridges.
2. American Concrete Institute International (ACI):
   a. ACI Detailing Manual.
   b. 117 – Specifications for Tolerance for Concrete Construction and Materials.
   c. 301 – Specifications for Structural Concrete for Buildings; American Concrete Institute International.
   d. 315 – Details and Detailing of Concrete Reinforcement.
   e. 318 – Building Code Requirements For Structural Concrete and Commentary; American Concrete Institute International.
   f. SP-66 – ACI Detailing Manual; American Concrete Institute International.
3. American Welding Society (AWS):
   a. C6.1 – Recommended Practices for Friction Welding.
   b. D1.1/D1.1M – Structural Welding Code – Steel.
   c. D1.4/D1.4M – Structural Welding Code – Reinforcing Steel; American Welding Society.
4. ASTM International (ASTM):
   a. A 82/A 82M – Standard Specification for Steel Wire, Plain, for Concrete Reinforcement.
   b. A 184/A 184M – Standard Specification for Welded Deformed Steel Bar Mats for Concrete Reinforcement.
   c. A 185/A 185M – Standard Specification for Steel Welded Wire Reinforcement, Plain, for Concrete.
   d. A 615/A 615M – Standard Specification for Deformed and Plain Carbon Steel Bars for Concrete Reinforcement.
   e. A 706/A 706M – Standard Specification for Low-Alloy Steel Deformed and Plain Bars for Concrete Reinforcement.
   f. A 970 – Standard Specification for Headed Steel Bars for Concrete Reinforcement.
5. Concrete Reinforcing Steel Institute (CRSI):
   a. DA4 – Manual of Standard Practice; Concrete Reinforcing Steel Institute.
   b. P1 – Placing Reinforcing Bars; Concrete Reinforcing Steel Institute.

1.4 DEFINITIONS

A. Upset Bar Ends: The ends of bars that have been thickened by metalworking, in such a manner that the cross-sectional area of a portion or all of the stock is increased, and length is decreased.

1.5 SUBMITTALS

A. See Section 01 33 00, “Submittal Procedures”
B. Reinforcing schedules shall be submitted to the Engineer for approval prior to fabrication. Detailing of all reinforcing steel shall be in accordance with ACI 318 and ACI 315.
C. List of all reinforcing steel and bending diagrams shall be furnished, by electronic submittal through CMS, to the Engineer at least 1 week before the placing of reinforcing steel is begun. Such lists shall not be reviewed for accuracy. The Contractor shall be responsible for the accuracy of the lists and for furnishing and placing all reinforcing steel in accordance with the details shown on drawings.
D. Shop Drawings (Placing Drawings): Comply with requirements of ACI SP-66. Include bar schedules, shapes of bent bars, spacing of bars, and location of splices.
E. Manufacturer’s Certificate: Certify that reinforcing steel and accessories supplied for this Project meet or exceed specified requirements.
F. The Contractor shall submit to the Engineer for approval, individual product data for each material or equipment listed below:
    1. Reinforcement bars.
    2. Reinforcement wire.
    3. Reinforcement wire fabric.
    4. Reinforcement accessories.
    5. Bar-lock couplers.
    6. T-headed bars.

1.6 QUALITY ASSURANCE

A. Perform Work of this Section in accordance with ACI 301.
    1. Maintain 1 copy of document on Project Site.
B. Welders’ Certificates: Submit certifications for welders employed on the Project, verifying AWS qualification within the previous 12 months.

1.7 DELIVERY, STORAGE, AND HANDLING

A. Reinforcing steel shall be stored off of the ground and protected from oil or other materials detrimental to the steel or bonding capability of the reinforcing bar. Epoxy-coated reinforcing bars shall be stored on protective cribbing. Store reinforcement of different sizes and shapes in separate piles or racks raised above the ground.

PART 2 PRODUCTS

2.1 REINFORCEMENT

A. Bars for reinforcement shall comply with the requirements of ASTM A 615, Grade 60/A651M Grade 60 (420).
B. Wire for reinforcement shall comply with the requirements of ASTM A 82.
C. Wire fabric shall comply with the requirements of ASTM A 185.
D. Reinforcement Accessories:
    1. Tie Wire: Annealed, minimum 16 gauge.
    2. Chairs, Bolsters, Bar Supports, Spacers, and other devices for spacing, supporting and fastening reinforcing bars shall be in accordance with the CSRI Manual of Standard Practice. These items shall be sized and shaped for adequate support of reinforcement during concrete placement.
    3. The spacer blocks shall be to the approval of the Engineer and they shall be of a mix equal to the concrete in which they are to be embedded.

E. Bar-Lock Couplers shall be shear-bolt coupling sleeves that employ lockshear bolts and internal serrated rails within the coupling sleeve. They shall exceed all ACI 318 requirements for both tension and compression. The sleeves shall operate such that the sleeves are placed over the bar-ends and the lockshear bolts are tightened until the bolt-heads shear off. The sleeves shall be manufactured by Bar-Lock (MBT) Coupler Systems or approved equal.

F. T-Headed Bars: Headed Reinforcement Corp. (HRC) Type 110 or approved equal.

1. The bar material for the T-Headed Bars shall meet ASTM A 706. The head plate material shall meet ASTM A 572, Grade 50.
2. The plate shall be welded to the bar by friction welding conforming to AWS C 6.1.
3. Some T-Headed Bars called out in the Drawings show an upset end. The upset bar ends shall be equal to 1½ times the bar diameter. T-heads (head plates) shall be equal to a net bearing area of four times bar area.
4. Ends of bars shall be upset at the Job Site or in a shop using an upsetting machine available through manufacturer or their licensed distributor.
5. The headed bars and upset end shall be capable of developing the full rupture strength of the reinforcing steel.

2.2 FABRICATION

A. Fabricate concrete reinforcing in accordance with CRSI (DA4) - Manual of Standard Practice, ACI SP-66 - ACI Detailing Manual, ACI 318, and ASTM A 184/A 184M.

B. Welding of reinforcement is permitted only with approval of the Engineer.

C. Perform welding in accordance with AWS D1.4.

PART 3 EXECUTION

3.1 PREPARATION AND GENERAL PROCEDURES

A. Reinforcing schedules must be submitted to the Engineer for approval. Detailing of all reinforcing steel shall be in accordance with ACI 318 and ACI SP-66.

B. The number, size, form, and position of all reinforcement shall be in accordance with the Drawings. Bars shall be tied at all intersections with an approved wire in accordance with industry standards unless otherwise approved by the Engineer.

C. Bundling of reinforcing bars shall be permitted only where indicated on Drawings and the clearance between parallel bars shall apply to the clearance between bundles of bars.

D. Drawings show the minimum reinforcing steel required in the finished structural components. If additional reinforcing and inserts are required for the correct placement of the minimum reinforcing, such reinforcing and inserts shall be at the Contractor’s expense and shall be in accordance with acceptable construction methods. No spacing or supporting hardware shall be left exposed.

3.2 PLACEMENT

A. Comply with the CRSI Manual of Standard Practice for placing reinforcement.

B. Comply with the requirements of ACI 301. Clean reinforcement of loose rust and mill scale, earth, and other foreign materials.

C. Place, support, and secure reinforcement against displacement. Do not deviate from required position.

1. Tie wires shall be bent away from the exposed face.

D. Accommodate placement of formed openings.

E. The minimum concrete cover to reinforcing steel for cast in place concrete shall be as indicated on the Drawings.

F. Dense concrete (not mortar) spacer blocks shall be used for holding reinforcement from contact with forms and to ensure correct cover of concrete over the bars.

G. All reinforcement and embedded items shall be inspected and approved by the Engineer prior to placing concrete.

PART 4 MEASUREMENT AND PAYMENT

4.1 NO SEPARATE MEASUREMENT AND PAYMENT WILL BE MADE FOR ANY WORK COVERED IN THIS SECTION. THE COST OF THIS WORK SHALL BE CONSIDERED INCIDENTAL TO AND INCLUDED IN THE PRICES FOR OTHER RELATED WORK PROVIDED IN THE SCHEDULE OF BID ITEMS.

END OF SECTION

SECTION 033000 - CAST-IN-PLACE CONCRETE

PART 1 GENERAL

1.1 SUMMARY

A. The Contractor shall furnish all labor, equipment, materials, and incidentals necessary to design, construct, and place cast-in-place concrete and other related Work complete, as indicated on the Drawings and as specified herein.

B. This Section includes:

1. Structural Concrete for footings, foundations, and barriers.
2. Miscellaneous Concrete.
   a. Concrete cast on site for various utility systems.
3. Joint devices and seals, associated with concrete Work.
4. Concrete curing and finishing.
5. Testing of cast-in-place concrete.

1.2 RELATED SECTIONS

A. Section 01 33 00, “Submittal Procedures”
B. Section 03 10 00, “Concrete Forming and Accessories”
C. Section 03 15 13, “Water Stops”
D. Section 03 20 00, “Concrete Reinforcing”
E. Section 31 00 00, “Earthwork”
F. Section 33 40 00, “Storm Drainage Utilities”

1.3 REFERENCES

1. The following publications form a part of this Specification to the extent referenced. The publications are referred to in the text by the basic designation only. The latest edition of the applicable publication in effect at the time the Contract is awarded shall be used.
2. American Concrete Institution International (ACI):
   a. 117 – Standard Specifications for Tolerances for Concrete Construction and Materials; American Concrete Institute, 2011.
   b. 211.1 – Standard Practice for Selecting Proportions for Normal, Heavyweight, and Mass Concrete; American Concrete Institute, 2011.
   c. 207.1 – Mass Concrete; American Concrete Institute, 2011.
   d. 301 – Specifications for Structural Concrete; American Concrete Institute, 2011.
   e. 304R – Guide for Measuring, Mixing, Transporting, and Placing Concrete; American Concrete Institute, 2011.
   f. 308R – Guide to Curing Concrete; American Concrete Institute, 2011.
   g. 318 – Building Code Requirements for Structural Concrete and Commentary; American Concrete Institute, 2011.
3. American Society for Testing and Materials ASTM International (ASTM):
   a. C 33 – Standard Specification for Concrete Aggregates.
   b. C 39/C 39M – Standard Test Method for Compressive Strength of Cylindrical Concrete Specimens.
   c. C 94/C 94M – Standard Specification for Ready-Mixed Concrete.
   d. C 143/C 143M – Standard Test Method for Slump of Hydraulic Cement Concrete.
   e. C 150 – Standard Specification for Portland Cement.
   f. C 173/C 173M – Standard Test Method for Air Content of Freshly Mixed Concrete by the Volumetric Method.
   g. C 260 – Standard Specification for Air-Entraining Admixtures for Concrete.
   h. C 390 – Standard Specification for Liquid Membrane-Forming Compounds for Curing Concrete

i. C 494/C 494M – Standard Specification for Chemical Admixtures for Concrete.
j. C 618 – Standard Specification for Coal Fly Ash and Raw or Calcined Natural Pozzolan for Use in Concrete.
k. C 881/C 881M – Standard Specification for Epoxy-Resin-Base Bonding Systems for Concrete.
l. C 1077 – Standard Practice for Laboratories Testing Concrete and Concrete Aggregates for Use in Construction and Criteria for Laboratory Evaluation.
m. C 1107/C 1107M – Standard Specification for Packaged Dry, HydraulicCement Grout (Nonshrink).
n. D 512 – Standard Test Methods for Chloride Ion in Water.
o. D 516 – Standard Test Method for Sulfate Ion in Water.
p. D 994 – Standard Specification for Preformed Expansion Joint Filler for Concrete (Bituminous Type).

4. California Department of Transportation (Caltrans):
   a. Environmental Product Declarations (EPD) per the Buy Clean California Act.
5. Standard Specifications for Public Works Construction (SSPWC):
   a. 201 – Concrete, Mortar and Related Materials.
   b. 303 – Concrete and Masonry Construction.
      1) 303.1 – Concrete Structures.
6. California Stormwater Quality Association (CASQA) Stormwater Best Management Practices (BMP) Handbook: Construction:
   a. Section 4, Non-Stormwater Management and Material Management BMPs
      1) BMP Fact Sheet WM-8, Concrete Waste Management.

1.4 SCHEDULING

A. It is the Contractor's responsibility to have mix designs prepared and reviewed by the Engineer sufficiently in advance of the scheduled use of the concrete in the Work to allow for failure of trial batches to meet specified requirements, but in no case shall the mix design process commence later than 65 calendar days prior to the scheduled use of the concrete in the Work.

B. Contractor shall submit historical mixes for approval if there are sufficient break history and the source of all material is similar to the source of material for this Project.

1.5 SUBMITTALS

A. See Section 01 33 00, "Submittal Procedures."

B. Product Data: The Contractor shall submit manufacturers' data on manufactured products showing compliance with specified requirements.
   1. Submit a complete list of materials including type, quantities of mix ingredients; brand; source and amount of cement, fly ash, and admixtures; and applicable reference specifications for each mix design of concrete.
   2. The Contractor shall submit material compliance certificates for all cement, admixtures, fly ash and aggregates that are used for proposed mix designs and used on the Project.
   3. Submit additional data regarding concrete aggregates if the source of aggregate changes.
   4. Bonding material shall be approved by the Engineer. Include structural design criteria, preparation instructions, and installation methods.
   5. Submit product-specific Type III EPD's or third party certified EPD including external verification in accordance with ISO 14025 and 14044, and EN 15804 or ISO 21930.

C. Mix Design Submittals: The Contractor shall submit a mix design for each strength and type of concrete.
   1. Indicate where each mix design shall be used.
   2. Submit copies of test reports by independent test labs conforming to ASTM C 1077 showing that the mixture has been successfully tested to produce concrete with the properties specified and that mixture shall be suitable for the Project Site conditions.
   3. Test reports shall be submitted for approval along with the concrete mixture proportions, slump, air content, unit weight, and temperature, as a minimum before concrete placement.
   4. Submit new mix design when tests indicate non-compliance with specified requirements or when there are significant changes of the concrete ingredients, including source changes.

D. Project Record Documents: Accurately record actual locations of embedded utilities and components that will be concealed from view upon completion of concrete work. See Section 01 70 00, “Execution and Closeout Requirements.”

E. Inspection Report shall be submitted within 90 calendar days after final placement of concrete.

F. List of sources and products for crack repair Work, as required after inspection.

1.6 QUALITY ASSURANCE

A. All cast-in-place concrete shall conform to applicable requirements of Sections 201 and 303 of the SSPWC and ACI 318.

B. Unless specifically modified by the Engineer, all concrete sampling, frequency of sampling testing and evaluation of results shall comply with ACI 318.

C. Mix designs shall be prepared by an accredited laboratory experienced in this field, and under the direction of a registered Civil Engineer in the state of California who shall stamp and sign all reports and designs.

D. The Contractor shall accommodate Engineer’s batch plant inspection, if required.

1.7 DELIVERY, STORAGE AND HANDLING

A. The Contractor shall comply with ACI 301 for batch plant storage of materials.

B. Protect materials from contaminants such as grease, oil, and dirt.

C. Ensure materials can be accurately identified after bundles are broken and tags removed.

1.8 PROJECT SITE CONDITIONS

A. Do not place concrete on days when atmospheric conditions are producing, or are likely to produce, adverse weather conditions, such as excessive winds, hot dry winds, relative humidity less than 30 percent or temperature greater than 90° F.

B. The Contractor shall address environmental conditions prior to placement to the satisfaction of the Engineer.

PART 2 PRODUCTS

2.1 FORMWORK

A. Comply with requirements of Section 03 10 00, “Concrete Forming and Accessories.”

2.2 REINFORCEMENT

A. Comply with requirements of Section 03 20 00, “Concrete Reinforcing.”

2.3 CONCRETE MATERIALS

A. Cement: ASTM C 150, Type V - High Low-Alkali Portland type.
   1. Acquire all cement for entire Project from same source. Provide new submittals when the source changes.

B. Fine and Coarse Aggregates: ASTM C 33, Class 4S.
   1. Acquire all aggregates for entire Project from same source. Provide new submittals when the source changes.

C. Fly Ash: ASTM C 618, Class F.

D. Calcined Pozzolan: ASTM C 618, Class N.

E. Water: Clean and not detrimental to concrete. Water shall comply with the requirements of ASTM C 94/C 94M and shall not contain more than 500 ppm of chlorides as C1 when tested per ASTM D 512 nor more than 100 ppm of sulphates as S04 when tested per ASTM D 516.

2.4 CHEMICAL ADMIXTURES

A. Concrete shall contain no calcium chloride or admixture containing chlorides from other than impurities from admixture ingredients.

B. All concrete mixtures for the reinforced concrete Work shall contain corrosion-inhibiting admixture.
   1. The following products are acceptable:
      a. Rheocrete 222+ amine-ester organic corrosion-inhibiting admixture, as manufactured by Master Builders, Inc. or approved equal, per manufacturer recommendations.
      b. DCI Calcium Nitrate base Corrosion Inhibitor, manufactured by Grace Concrete Products or approved equal, per manufacturer recommendations.
      c. BCN Calcium Nitrate based corrosion inhibitor, manufactured by Eucon or approved equal, per manufacturer recommendations.
   2. Include written documentation regarding the chemistry, corrosion protection mechanism, and data documenting effectiveness of corrosion protection for the proposed products.
   3. Corrosion-inhibiting admixture shall not affect the set time of the concrete.
C. Do not use chemicals that will result in soluble chloride ions in excess of 0.1 percent by weight of cement.
D. Air Entrainment Admixture: ASTM C 260, compatible with the water-reducing admixture employed. Air Entrainment Admixture shall contain no chlorides or other chemicals causing corrosion.
E. Water Reducing Admixture: ASTM C 494/C 494M Type A.
F. High Range Water Reducing and Retarding Admixture: ASTM C 494/C 494M Type G.
G. High Range Water Reducing Admixture: ASTM C 494/C 494M Type F.
H. Water Reducing and Retarding Admixture: ASTM C 494/C 494M Type D.
I. Any admixtures not listed shall be allowed only if approved by the Engineer.

2.5 CONCRETE MIX DESIGN

A. Mixes shall be so designed that average strengths developed in samples made, cured, and tested under the provision of ACI 318 Section 5.6 shall be at least 10 percent greater than strength specified on the Drawings.
B. Proportioning Normal Weight Concrete: Comply with ACI 211.1 recommendations.
C. Concrete Strength: Establish required average strength for each type of concrete on the basis of trial mixtures, as specified in ACI 301.
   1. For trial mixtures method, employ an independent testing agency acceptable to the Engineer for preparing and reporting proposed mix designs.
   2. Concrete shall achieve a 7-day break strength of 3000 psi before allowing any permanent or temporary load on newly poured concrete.
D. Admixtures: Add acceptable admixtures as recommended in ACI 211.1 and at rates recommended by manufacturer.
E. All concrete for reinforced concrete Work shall meet the following requirements, unless otherwise specified in the Specifications or on Drawings:
   1. Compressive Strength, when tested in accordance with ASTM C 39/C 39M shall meet the 28 days compressive strength of 3000 psi (walkway pavement) or 4,000 psi (foundations, underground walls, invert slabs, roof slabs, and slab on grade).
   2. Fly Ash Content: Maximum 20 percent of cementitious materials by weight.
   3. Water-Cement ratio: Maximum of 0.40 by weight.
   4. Maximum Slump: without a plasticizer, 4 inches
   5. Maximum Slump: with a plasticizer, 2 inches before plasticizer and 7 inches after plasticizer.
   6. Maximum aggregate size, 1 inch, in accordance with ACI 318 Section 3.3 for congested areas unless noted otherwise on the Drawings.
   7. Corrosion inhibitors: per manufacturer’s recommendations and as approved by the Engineer.
F. Test a minimum of one trial batch of production concrete. If batching facilities are located such that the haul-time will exceed 30 minutes, a simulated haul time must be included in the trial batch.

2.6 MIXING

A. Trial concrete mixtures with the corrosion inhibiting admixture, shall be made in compliance with the time limits specified herein prior to concrete placement and, if necessary, adjustments shall be made in order to achieve the desired air content, slump, set times, and drying shrinkage limits.

PART 3 EXECUTION

3.1 EXAMINATION

A. Verify lines, levels, and dimensions before proceeding with Work of this Section.
B. No concrete Work shall begin until the mix design is accepted by the Engineer.

3.2 PREPARATION

A. Verify that forms are clean and free of rust before applying release agent.
B. Coordinate placement of embedded items with erection of concrete formwork and placement of form accessories.
C. Time from initial mixing of the concrete to complete discharge into the forms shall not exceed 1½ hours, except that this time may be reduced by the Engineer under certain conditions, which would contribute to early setting.
D. Where new concrete is to be bonded to previously placed concrete, prepare existing surface by scarifying to ¼" amplitude and cleaning with steel brush and applying bonding agent in accordance with manufacturer's instructions.
   1. Use epoxy bonding system for bonding to damp surfaces, for structural loadbearing applications, and where curing under humid conditions is required.
E. Chemical admixtures shall be added to the concrete during the mixing process by automatic mechanical dispensing units. These dispensers shall be calibrated periodically to ensure accuracy.
F. On-site super plasticizer, if used, shall be added in accordance with the manufacturer's instruction and/or recommendations.
G. In locations where new concrete is doweled to existing Work, drill holes in existing concrete, insert steel dowels and pack solid with non-shrink grout.

3.3 PLACING CONCRETE

A. Place concrete in accordance with ACI 304R. Concrete placements larger than 3 feet by 3 feet by 3 feet, shall also be placed in accordance with ACI 207.1.
B. Place concrete for slabs in accordance with ACI 302.1R.
C. Notify the Engineer not less than 48 hours prior to commencement of placement operations.
D. Ensure reinforcement, inserts, waterstops, embedded parts, and formed construction joint devices shall not be disturbed during concrete placement.
E. Repair underslab vapor retarder damaged during placement of concrete reinforcing. Repair with vapor retarder material; lap over damaged areas minimum of 6 inches and seal watertight.
F. Concrete shall be vibrated adequately by means of mechanical vibrators, with care being taken not to over vibrate. Rock pockets and honeycombing shall not be acceptable.
G. The Engineer shall maintain records of concrete placement to record date, location, quantity, air temperature, and test samples taken.
H. Place concrete between predetermined expansion, control, and construction joints.
I. Do not interrupt successive placement; do not permit cold joints to occur.

3.4 CONCRETE FINISHING

A. Concrete finishes shall be in accordance with Section 303-1. 9 of the SSPWC and as indicated on the Drawings. All other unformed surfaces shall receive a wood float finish.
B. Repair surface defects, including tie holes, immediately after removing formwork.
C. Dusting of surfaces with dry cement to absorb excess water shall not be permitted.
D. All other concrete surfaces shall be smooth and true. As soon as forms are removed, all fins, projections and offsets shall be smoothed off and air holes filled with 1:1½ mortar. Any area requiring treatment after stripping, as outlined above, shall afterwards be rubbed down with a Carborundum block and washed clean. Reconstruction or repairs to faulty Work shall be done under the direction and approval of the Engineer.

3.5 CURING AND PROTECTION

A. Comply with requirements of ACI 301 and ACI 308R. Immediately after placement, protect concrete from premature drying, excessively hot or cold temperatures, and mechanical injury.

B. Maintain concrete with minimal moisture loss at relatively constant temperature for period necessary for hydration of cement and hardening of concrete.

1. Normal concrete: 7 days or until a minimum of 75 percent of the specified 28-day compressive strength has been achieved.
2. High early strength concrete: Four days or until a minimum of 75 percent of the specified 28-day compressive strength has been achieved, whichever is longer.

C. Formed Surfaces: Cure by moist curing with forms in place for full curing period.

D. Surfaces Not in Contact with Forms:

1. Initial/Intermediate Curing: Apply liquid membrane-forming compounds uniformly and at the rate recommended by the manufacturer. Apply liquid membrane-forming compounds immediately after final finishing and as soon as the free water has disappeared, no water sheen is visible, and bleeding has essentially ceased, and before surface is dry. Keep the concrete surface moist without standing water. Protect the membrane from damaging for the duration of curing period. Provide adequate ventilation during the formation of the membrane.
2. Place curing compounds with an electrical or gasoline-powered sprayer. The use of a hand pump sprayer, brush, or paint roller for areas less than 2,000 square feet is permissible or if overspray from powered sprayers could damage adjacent material.
3. Final Curing: Begin after initial curing but before surface is dry by moistureretaining cover. Seal the cover in place with waterproof tape or adhesive.

E. Curing compounds shall be applied in strict accordance with manufacturers' directions and the film shall be protected so that it remains intact for the entire curing period.

F. Forms not coated with form sealers and remaining in place during curing period shall be kept sufficiently wetted with water to prevent cracks and opening of form joints.

G. Surfaces from which forms are removed before elapse of curing period shall be cured and protected as specified for surfaces not covered by forms.

H. Application of curing compounds during hot weather shall be preceded by 24 hours of moist curing.

3.6 TOLERANCES

A. Finished lines, dimensions and surfaces shall be correct and true within tolerances specified in ACI 117, Drawings, and Project Specifications, whichever is smaller.

3.7 FIELD QUALITY CONTROL

A. Tests of concrete and concrete materials by City may be performed at any time to ensure conformance with specified requirements.

1. The City shall pay for and perform acceptance testing. The costs of retesting or coring of concrete due to Work failing to meet the Specifications shall be paid by the Contractor.

B. Sampling and testing procedures shall comply with ACI 318 with the following modifications:

1. 5 specimens shall be molded from each sample for compression testing.
2. 1 representative specimen of the above four shall be tested at 7 calendar days and the test results reported to the Engineer on the same day the test is made.
3. 3 specimens shall be tested 28 calendar days after the samples were molded.

C. Compressive Strength Tests: ASTM C 39/C 39M. For each test, mold and cure four concrete test cylinders. Obtain test samples for every 100 cubic yards or less of each class of concrete placed.

D. Perform 1 slump test for each set of test cylinders taken, following procedures of ASTM C 143/C 143M.

3.8 NON-CONFORMING WORK

A. Concrete not conforming to the lines, detail, and grade specified herein or as shown on the Drawings shall be modified or replaced at the Contractor's expense and to the satisfaction of the Engineer.

B. Concrete not properly placed or resulting in honeycombing or having other defects in critical areas of stress, shall be repaired or replaced at the Contractor's expense and to the satisfaction of the Engineer.

3.9 SHRINKAGE CRACKING REQUIREMENTS AND REPAIRS

A. 90 calendar days after the final placement of concrete, carefully inspect each separate structure for cracking and submit the inspection results to the Engineer for review. Clearly identify all cracks that need to be repaired in the inspection report.

B. Cracks found in such concrete shall be inspected and repaired in accordance with the requirements specified herein.

   1. Submit proposed products and procedures for repair Work.

C. Excessive cracking is an indication of unacceptable materials and/or construction practices. Inspection and repairs shall be provided by the Contractor at no cost to the City.

   1. The Contractor shall provide the City ample notice of these inspections and provide access and facilities to allow Engineer to observe and verify inspections and inspection reports.
   2. Crack width shall be measured with a standard crack gauge and determined at the concrete surface.

D. Cracks that shall be repaired:

   1. Cracks or portions of cracks that are more than 0.02 inch wide for a length of 24 inches or more.

E. Repair method for vertical wall surfaces: Prepare cracks as specified above and seal crack at surface by trowel application with a suitable type, grade, and class of epoxy bonding compound.

F. Repair method for beams and foundations:

   1. Cracks between 0.02 inch and 0.04 inch wide shall be repaired as required above for horizontal surfaces and vertical wall surfaces.
   2. Cracks over 0.04 inch shall be repaired by epoxy injection as directed by the Engineer.

3.10 DEFECTIVE CONCRETE

A. Test Results: The testing agency shall report test results in writing to the Engineer and Contractor within 24 hours of test.

B. Defective Concrete: Concrete not conforming to required lines, details, dimensions, tolerances, or specified requirements.

C. Repair or replacement of defective concrete shall be determined by the Engineer. The cost of additional testing shall be borne by the Contractor when defective concrete is identified.

D. Do not patch, fill, touch-up, repair, or replace exposed concrete except upon express direction of the Engineer for each individual area.

3.11 CONCRETE WASTE MANAGEMENT

A. The Contractor shall manage concrete waste pursuant to the concrete waste management procedures provided in the California Stormwater Quality Association (CASQA) Stormwater Best Management Practices (BMP) Handbook: Construction (latest edition), Section 4, Non-Stormwater Management and Material Management BMPs and BMP Fact Sheet WM-8, Concrete Waste Management

   1. Dispose of concrete waste and liquid waste in accordance with applicable Federal, State, and local regulations.

PART 4 MEASUREMENT AND PAYMENT

4.1 MEASUREMENT FOR “PUMP STATION” WILL BE ON A PERCENTAGE OF THE LUMP SUM (LS) BID FOR THIS ITEM AT THE DISCRETION OF THE ENGINEER IN ACCORDANCE WITH GENERAL CONDITIONS GC-9.1.3. PAYMENT SHALL INCLUDE FURNISHING ALL LABOR, TRANSPORTATION, MATERIALS, EQUIPMENT TESTING, AND INCIDENTALS FOR CONSTRUCTION OF THE PUMP STATION, INCLUDING BUT NOT LIMITED TO, CAST-IN-PLACE CONCRETE WALLS, FOOTINGS, SLABS, BEAMS, WATER STOPS, ENCASEMENTS, PIPE SUPPORTS; STRUCTURAL STEEL COLUMNS, BEAMS, LEDGERS, CANOPY CHANNELS, DECKING; METAL STAIRS, WET WELLS, VAULT COVERS, HANDRAILS, HATCHES, GRATING, LADDERS; WATERPROOFING, THERMAL AND MOISTURE PROTECTION, DOORS AND FRAMES, ROOF WINDOWS, LOUVERS AND VENTS, FINISHES, FIRE PROTECTION, BUILDING PLUMBING, BUILDING HVAC, BUILDING AND PUMP STATION ELECTRICAL SYSTEMS, UTILITIES RELOCATIONS, BURIED PIPE, PROCESS PIPE, VALVES, INSTRUMENTS AND PROGRAMMING, BATHROOM ACCESSORIES, AND FURNITURE AS SPECIFIED AND SHOWN.

A. The bridge crane for the pump station shall be included in the measurement and payment for “Bridge Crane” as described in Section 41 22 13.13.

B. No separate measurement and payment will be made for any other work covered by this Section. The cost of any other work shall be considered incidental.

END OF SECTION

SECTION 035400 - CAST UNDERLAYMENT

PART 1 GENERAL

1.1 SECTION INCLUDES

A. Liquid-applied self-leveling floor underlayment.
   1. Use cementitious type at :
      a. Cast-in-place concrete does not meet finished floor surface tolerances specified herein and/or in other Sections.
      b. Cast-in-place concrete is not level at sill and threshold conditions.
      c. Transition locations between adjacent floor coverings that have different thicknesses.
      d. Per drawings.
   2. Testing and application of systems for the reduction of moisture vapor transmission and alkalinity control for interior concrete slabs that are not in compliance with hydraulic cement manufacturers' written requirements.
   3. For applications below interior floor coverings, provide trowelable and patching compounds as specified in Division 09 flooring section and as approved by floor covering manufacturer. Submittals for hydraulic cement underlayment provided under this Section shall be coordinated and approved by the finish flooring manufacturer.

1.2 RELATED REQUIREMENTS

A. Section 012100 - Allowances: Hydraulic cement underlayment allowance.
B. Division 09 Sections: Patching and leveling compounds applied with floor coverings if not provided under this Section.

1.3 REFERENCE STANDARDS

A. ACI SPEC-117 - Specification for Tolerances for Concrete Construction and Materials; 2010 (Reapproved 2015).
B. ASTM C109/C109M - Standard Test Method for Compressive Strength of Hydraulic Cement Mortars (Using 50 mm [2 in.] Cube Specimens); 2024.
C. ASTM C150/C150M - Standard Specification for Portland Cement; 2024.
D. ASTM C219 - Standard Terminology Relating to Hydraulic and Other Inorganic Cements; 2020.
E. ASTM C1602/C1602M - Standard Specification for Mixing Water Used in the Production of Hydraulic Cement Concrete; 2022.
F. ASTM D7234 - Standard Test Method for Pull-Off Adhesion Strength of Coatings on Concrete Using Portable Pull-Off Adhesion Testers; 2021.
G. ASTM C348 - Standard Test Method for Flexural Strength of Hydraulic-Cement Mortars; 2021.
H. ASTM E84 - Standard Test Method for Surface Burning Characteristics of Building Materials; 2026.
I. ASTM F710 - Standard Practice for Preparing Concrete Floors to Receive Resilient Flooring; 2022.
J. ASTM F1869 - Standard Test Method for Measuring Moisture Vapor Emission Rate of Concrete Subfloor Using Anhydrous Calcium Chloride; 2023.
K. ASTM F2170 - Standard Test Method for Determining Relative Humidity in Concrete Floor Slabs Using in situ Probes; 2019a.
L. ASTM F3010 - Standard Practice for Two-Component Resin Based Membrane-Forming Moisture Mitigation Systems for Use Under Resilient Floor Coverings; 2018.

1.4 PREINSTALLATION MEETINGS

A. Preinstallation Conference: Conduct conference at Project site.

1.5 SUBMITTALS

A. See Section 013000 - Administrative Requirements, for submittal procedures.
B. Product Data: Provide manufacturer's data documenting physical characteristics and product limitations.

C. Certificate: Certify that products meet or exceed specified requirements and will not void any finish flooring system warranty.
D. Letter signed and executed by hydraulic cement underlayment manufacturer’s technical representative indicating manufacturer’s acceptance of substrate prior to application of hydraulic cement underlayment.
E. Manufacturer's Instructions: Indicate information on surface preparation, mixing instructions, environmental limitations, and installation instructions.
F. Shop Drawings: Include plans indicating substrates, locations, and average depths of underlayment based on survey of substrate conditions.
G. Sustainable Design Submittals: Product data for coating, indicating VOC content.
H. Field quality control reports.
I. Sample Warranty: For special warranty.

1.6 QUALITY ASSURANCE

A. Manufacturer Qualifications: Minimum 10 years experience in the production and sales of hydraulic cement underlayment, that meets or exceeds performance requirements indicated, and of documenting this performance by inclusion in test reports. Manufacturer shall have factory-authorized service representatives who are available for consultation, periodic project-site observations, and on-site assistance.
B. Installer Qualifications: Minimum 5 years experience installing hydraulic cement underlayment similar in material, design, and extent to that indicated for this project, whose work has resulted in installations with a record of successful in-service performance, and that employs installers and supervisors who are trained and approved by manufacturer to perform work of this Section.
C. Product Compatibility: Manufacturers of underlayment and floor-covering systems certify in writing that products are compatible.

1.7 DELIVERY, STORAGE, AND HANDLING

A. See Section 017419 - Construction Waste Management and Disposal for packaging waste requirements.
B. Store products in manufacturer's unopened packaging until ready for installation.
C. Keep dry and protect from direct sun exposure, freezing, and ambient temperatures greater than 105 degrees F.

1.8 FIELD CONDITIONS

A. Do not install underlayment until floor penetrations and peripheral work are complete.
B. Maintain minimum ambient temperatures of 50 degrees F 24 hours before, during, and 72 hours after installation of underlayment.
C. During curing process, ventilate spaces to remove excess moisture.

1.9 WARRANTY

A. Special Warranty for moisture / alkalinity control system: Manufacturer's standard or customized form in which manufacturer and installer agree to repair or replace materials that fail to control water vapor transmission or fail to control alkalinity within specified warranty period.
    1. Warranty includes, but is not limited to:
        a. Moisture control system.
        b. Underlayment.
        c. Floor covering system.
        d. Labor.
    2. Warranty period: 10 years from date of Substantial Completion.

PART 2 PRODUCTS

2.1 MANUFACTURERS

A. Cementitious Underlayment:

1. ARDEX Engineered Cements: www.ardexamericas.com/#sle.
2. Custom Building Products: www.custombuildingproducts.com/#sle.
3. LATICRETE International, Inc: www.laticrete.com/#sle.
4. Mapei Corporation: www.mapei.com/#sle.
5. Or Equal.

2.2 MATERIALS

A. Cementitious Underlayment: Blended cement mix, producing self-leveling underlayment with the following properties when mixed with water in accordance with manufacturer's directions:
   1. Compressive Strength: Minimum 4000 pounds per square inch after 28 days, tested per ASTM C109/C109M.
   2. Cement Binder: ASTM C150/C150M, portland cement, or hydraulic or blended hydraulic cement as defined by ASTM C219 C219.
   3. Flexural Strength: Minimum 1000 psi after 28 days, tested per ASTM C348.
   4. Density: 125 pcf, nominal.
   5. Final Set Time: 1 1/2 to 2 hours, maximum.
   6. Thickness: Capable of thicknesses from feather edge to maximum 2 inch.
   7. Surface Burning Characteristics: Flame spread/Smoke developed index of 0/0 in accordance with ASTM E84.
   8. Underlayment Additive: Resilient-emulsion product of underlayment manufacturer, formulated for use with underlayment when applied to substrate and conditions indicated.
B. Aggregate: Dry, well-graded, washed silica aggregate, approximately 1/8 inch in size and acceptable to underlayment manufacturer.
C. Reinforcement: Galvanized metal lath complying with recommendations of underlayment manufacturer for specific project circumstances.
D. Water: ASTM C1602/C1602M; clean, potable, and not detrimental to underlayment mix materials. Maximum temperature of 70 degree F.
E. Primer: Manufacturer's recommended type.
   1. VOC Content: Provide coating with VOC content of 100 g/L or less.
F. Surface Sealer: Designed to reduce porosity as recommended by manufacturer for type of floor covering to be applied to underlayment.
G. Moisture and Alkalinity Control System: As recommended by hydraulic cement underlayment manufacturer for mitigation of concrete slabs with moisture emissions and/or alkalinity measurements that are not within manufacturer's written limitations.

PART 3 EXECUTION

3.1 EXAMINATION

A. Verify substrate surfaces are clean, dry, unfrozen, and do not contain petroleum byproducts or other compounds detrimental to underlayment material bond to substrate.
B. Measure floor substrate flatness in accordance with ACI SPEC-117 using 10 foot straightedge method.
   1. Identify areas that are not in compliance with Performance Requirements article.
C. Examine substrates, with Installer present, for conditions affecting performance of the Work.
D. Proceed with application only after unsatisfactory conditions have been corrected.

3.2 PREPARATION

A. Concrete: Mechanically prepare steel troweled concrete to create surface to achieve bond; permitted methods include bead blasting and scarifying. Do not use acid etching.
B. Remove substrate surface irregularities. Fill voids and deck joints with filler. Finish smooth.
C. Vacuum clean surfaces.
D. Prime substrate in accordance with manufacturer's instructions. Allow to dry.

E. Concrete: Preinstallation Moisture, Alkalinity, and Bond Testing: Engage a qualified testing agency to perform tests to determine the suitability of the concrete subfloor to receive hydraulic cement underlayment by conducting the following tests unless otherwise recommended by the hydraulic cement underlayment manufacturer:
   1. Alkalinity Testing: Perform pH testing according to ASTM F710.
   2. Moisture Testing: Perform tests so that each test area does not exceed 1000 square feet, and perform no fewer than three tests in each installation area and with test areas evenly spaced in installation areas.
      a. Anhydrous Calcium Chloride Test: ASTM F1869.
      b. Internal Relative Humidity Test: Using in situ probes, ASTM F2170.
   3. Adhesion Testing: ASTM D7234.
   4. Submit copy of test reports for moisture and alkalinity content of concrete slab, and bond test, stating date of test, person conducting the test, and the area tested.
   5. Apply moisture and alkalinity control system according to ASTM F3010 and manufacturer's written instructions to produce a uniform, monolithic surface free of surface deficiencies such as pin holes, fish eyes, and voids. Install primers as required to comply with manufacturer's written instructions.
   6. Proceed with installation only after substrates pass testing.
F. Treat nonmoving substrate cracks according to manufacturer's written instructions to prevent cracks from telegraphing through underlayment.
G. Adhesion Tests: After substrate preparation, test substrate for adhesion with underlayment according to manufacturer's written instructions.
H. Scrape, sand, sweep and vacuum clean substrates to be covered by hydraulic cement underlayments immediately before installation. Proceed with installation only after unsatisfactory conditions have been corrected.

3.3 APPLICATION

A. General: Grind high spots of concrete and prior to application of any vapor control system. Fill low spots to produce level substrate in accordance with Performance Requirements article.
B. Mix and Install underlayment in accordance with manufacturer's instructions.
   1. Close areas to traffic during and after underlayment installation as recommended in writing by manufacturer.
   2. Coordinate installation of components to provide optimum adhesion to substrate and between coats.
   3. At substrate expansion, isolation, and other moving joints, allow joint of same width to continue through underlayment.
C. Apply primer over prepared substrate at manufacturer's recommended spreading rate.
D. Install underlayment to produce uniform, level surface.
   1. Install a final layer without aggregate to product surface.
   2. Feather edges to match adjacent floor elevations.
E. Cure underlayment according to manufacturer's written instructions. Prevent contamination during installation and curing processes.
F. Do not install floor coverings over underlayment until after time period recommended in writing by underlayment manufacturer.
G. Apply surface sealer at rate recommended by manufacturer.
H. Remove and replace underlayment areas that evidence lack of bond with substrate, including areas that emit a 'hollow' sound when tapped.

3.4 INSTALLATION TOLERANCES

A. Grind high spots of concrete and prior to application of any vapor control system, fill low spots to produce level substrate in accordance with the following, unless a Division 09 finish flooring manufacturers' requirements are stricter:
   1. Finish and measure surface, so gap at any point between concrete surface and an unleveled, freestanding, 10 foot long straightedge resting on two high spots and placed anywhere on the surface does not exceed 1/4 inch for the following flooring applications:
      a. Ceramic tile with all edges less than 15 inches.

2. Finish and measure surface, so gap at any point between concrete surface and an unleveled, freestanding, 10 foot long straightedge resting on two high spots and placed anywhere on the surface does not exceed 1/8 inch for the following flooring applications:
    a. Carpet.
    b. Resilient flooring.
    c. Ceramic tile with at least one edge 15 inches in length or longer.
    d. Resinous flooring systems (i.e. epoxy, urethane, etc.).
    e. Sill conditions.
    f. Threshold conditions.
    g. Other surface-applied flooring material.

3.5 FIELD QUALITY CONTROL

A. See Section 014000 - Quality Requirements for additional requirements.
B. Placed Material: Agency will inspect and test for compliance with specification requirements.
C. Measure hydraulic cement underlayment flatness according to ACI SPEC-117 upon conclusion of curing period for underlayments. Repair or replace areas that are not in compliance with Performance Requirements article.

3.6 PROTECTION

A. Protect against direct sunlight, heat, and wind; prevent rapid drying to avoid shrinkage and cracking.
B. Do not permit traffic over unprotected floor underlayment surfaces.
C. Protect underlayment from concentrated and rolling loads for remainder of construction period.

END OF SECTION

SECTION 040513.15 - MASONRY MORTAR AND GROUT

PART 1 GENERAL

1.1 SUMMARY

A. This Section includes:
1. Masonry mortar.
2. Masonry grout.
3. Integral water-repellent admixture.

1.2 RELATED SPECIFICATION SECTIONS INCLUDE BUT ARE NOT NECESSARILY LIMITED TO:

A. Section 04 22 00 –- Concrete Masonry.

1.3 QUALITY ASSURANCE

A. Referenced Standards:
1. ASTM International (ASTM):
a. C143/C143M, Standard Test Method for Slump of Hydraulic-Cement Concrete.
b. C144, Standard Specification for Aggregate for Masonry Mortar.
c. C150/C150M, Standard Specification for Portland Cement.
d. C207, Standard Specification for Hydrated Lime for Masonry Purposes.
e. C270, Standard Specification for Mortar for Unit Masonry.
f. C404, Standard Specification for Aggregates for Masonry Grout.
g. C476, Standard Specification for Grout for Masonry.
h. C1019, Standard Test Method for Sampling and Testing Grout.
i. C1093, Standard Practice for Accreditation of Testing Agencies for Masonry.
j. C1384, Standard Specification for Admixtures for Masonry Mortars.
2. The Masonry Society (TMS):
a. 602, Specification for Masonry Structures.

1.4 QUALITY ASSURANCE

A. Qualifications:
1. Preconstruction testing laboratory shall be an independent agency qualified in accordance with ASTM C1093 for performing the testing indicated.
a. Testing laboratory shall have a minimum of 10 years of experience in the testing of mortar and grout.
b. Technician conducting tests shall have minimum of five years of experience in the testing of mortar and grout.

B. Mock-Ups:
1. Provide mortar and grout for mock-up specified in Specification Section 04 22 00, “Concrete Unit Masonry.”

1.5 DEFINITIONS

A. Coarse grout and fine grout are defined by the aggregate size used in accordance with ASTM C476.
B. Coarse aggregate and fine aggregate are defined in ASTM C404, Table 1.

1.6 SUBMITTALS

A. Shop Drawings:
1. Product technical data including:
a. Acknowledgement that products submitted meet requirements of standards referenced.
b. General:

1) Product data for cementitious materials.Portland Cement.
2) Hydrated Lime.
3) Mortar Aggregates.
4) Grout Aggregates.
5) Masonry Mortar and Grout Water.
6) Integral water Repellent Admixture.
7) Type “S” Mortar Mix.
8) Masonry Grout Mix.

c. Source or producer of aggregates and gradation.
d. Integral water-repellent manufacturer’s dosage rate.
e. Proposed mortar mix design.
f. Proposed masonry grout mix design.

2. Test results:
a. Preconstruction mortar test results.
b. Preconstruction masonry grout test results.

B. Informational Submittals:
1. Qualifications of testing lab and technician.
2. Test results and inspection reports per Specification Section 01 45 33.

1.7 DELIVERY, STORAGE, AND HANDLING

A. Store cementitious materials on elevated platforms, under cover, and in a dry location.
1. Do not use cementitious materials that have become damp.
B. Store aggregates where grading and other required characteristics can be maintained and contamination avoided.
C. Deliver preblended, dry mixes in moisture-resistant containers.
1. Store preblended, dry mixes in delivery containers on elevated platforms, under cover, and in a dry location or in a metal dispensing silo with weatherproof cover.

PART 2 PRODUCTS

2.1 MATERIALS

A. Portland Cement:
1. ASTM C150/C150M, Type I or II.
2. No air entrainment.
3. Natural color.
4. Maximum percent of alkalis: 0.60 in accordance to ASTM C150/C150M, Table 2.
B. Hydrated Lime:
1. ASTM C207, Type S.
2. Type SA not acceptable.
3. Lime substitutes are not acceptable.
C. Mortar Aggregate: ASTM C144, free of gypsum.
D. Grout Aggregate: ASTM C404.
E. Water: Potable.
F. Integral Water Repellent Admixture:
1. Liquid polymeric admixture: ASTM C1384.
2. Verify compatibility with liquid water-repellent admixture being used in the fabrication of concrete masonry units.

2.2 MIXES

A. Mortar and grout shall comply with TMS 602 and Building Code.
B. Type “S” mortar shall be used:

1. Comply with ASTM C270, Table No. 1, Cement-Lime Mortar.
    a. Do not use masonry cement or mortar cement.
    b. No fly ash additives shall be accepted.
2. Mix materials minimum of 3 minutes and maximum of 5 minutes.
3. Adjust consistency to satisfaction of mason.
4. Do not use admixtures unless otherwise indicated.
5. Provide integral water repellent admixture in mortar used for:
    a. Exterior concrete masonry Work.
    b. Interior concrete masonry Work in wet areas.
6. Do not use integral water-repellent admixture in mortar for brick.

C. Masonry Grout:
1. ASTM C476.
    a. Minimum 28-day compressive strength: 2,000 psi.
    b. Slump: 8 to 11 inches.
2. Mix 5 minutes minimum.
3. No admixtures allowed.
4. At the Contractor's option, premixed or preblended grout meeting the above minimum requirements may be used.

2.3 SOURCE QUALITY CONTROL

A. Perform preconstruction laboratory tests on proposed masonry mortar and grout prior to start of masonry Work.
1. Perform tests far enough in advance so that any necessary retesting can be accomplished before masonry construction begins.
    a. Test mortar per ASTM C270.
    b. Test grout per ASTM C1019.

B. Source Limitations for Mortar Materials:
1. Obtain mortar ingredients of a uniform quality, including color for exposed masonry, from a single manufacturer for each cementitious component and from one source or producer for each aggregate.

PART 3 EXECUTION

3.1 INSTALLATION

A. Install products in accordance with manufacturer's instructions and TMS 602.

B. Mortar:
1. If standard gray mortar begins to stiffen, it may be retempered by adding water and remixing, unless prohibited by water-repellent admixture manufacturer.
    a. Standard gray mortar shall not be retempered more than one time.
2. All mortar shall be used within 2-1/2 hours maximum after initial mixing per TMS 602.
3. The Engineer reserves right to alter mix design based on initial rate of absorption of masonry units.
4. Set prefaced masonry using type "S" mortar.
    a. Rake mortar from joint as recommended by the unit manufacturer.
    b. Tuckpoint raked joints and scored joints using pointing grout.
        1) Install pointing grout in accordance with ANSI A108.10 and masonry unit manufacturer's published instructions.
        2) Use polymer modified sanded pointing grout for joints in:
            (a) Exterior masonry.
            (b) Interior dry areas.
        3) Use epoxy pointing grout for joints in interior areas subject to exposure to corrosive or caustic chemicals.

C. Masonry Grout:

1. Use grout within 1-1/2 hours maximum after initial mixing.
2. Use no grout after it has begun to set.
3. Do not retemper grout after initial mixing.
4. Place grout in lifts not exceeding 4 feet.
5. Use coarse grout in spaces with least dimension over 2 inches.
6. Consolidate all grout while installing.
    a. Consolidate grout pours 12 inches or less in height by mechanical vibration or by puddling.
    b. Consolidate grout pours exceeding 12 inches in height by mechanical vibration and reconsolidate by mechanical vibration after initial water loss and settlement has occurred.

3.2 FIELD QUALITY CONTROL

A. Masonry Mortar and Grout Testing and Inspection:
1. Testing and inspection services shall be provided by the Contractor's City.special masonry inspector.
2. Testing and inspection shall include, but is not limited to:
    a. Observe proportions of Site-prepared mortar and grout.
    b. Observe grout space prior to grouting.
    c. Grout compressive strength sampling, testing and reporting per ASTM C1019.
        1) One strength test shall be the average of three specimens from the same sample, tested at 28 days.
    d. Grout slump test sampling, testing, and reporting per ASTM C143/C143M.
    e. Frequency of sampling: 1 sample (3 specimens) collected each grouting operation during masonry construction.
3. Reporting: Special inspector to submit test results and inspection reports per Specification Section 01 45 33.

PART 4 MEASUREMENT AND PAYMENT

4.1 NO SEPARATE MEASUREMENT AND PAYMENT WILL BE MADE FOR ANY WORK COVERED BY THIS SECTION. THE COST OF THIS WORK SHALL BE CONSIDERED INCIDENTAL TO AND INCLUDED IN THE PRICES OF OTHER RELATED WORK PROVIDED IN THE SCHEDULE OF BID ITEMS.

END OF SECTION

SECTION 042200 - CONCRETE MASONRY UNITS

PART 1 GENERAL

1.1 SUMMARY

A. The Work of the Section consists of construction of concrete masonry unit (CMU) assemblies, including:
   1. Concrete block masonry; precision block.
   2. Masonry water-repellent finish.
   3. Grouting of masonry, plates, and embeds.
   4. Fabrication and installation of reinforcing steel bars in masonry.

1.2 RELATED SECTIONS

A. Section 03 20 00, “Concrete Reinforcing”
B. Section 03 30 00, “Cast-in-Place Concrete”
C. Section 04 05 13.15, “Masonry Mortar and Grout”
D. Section 05 50 13, “Miscellaneous Metal Fabrications”
E. Section 07 19 00, “Water Repellents”

1.3 REFERENCES

1. American Society for Testing and MaterialsASTM International (ASTM):
   a. ASTM C5, Specification for Quicklime for Structural Purposes.
   b. ASTM C90, Specification of Hollow Load-Bearing Concrete Masonry Units.
   c. ASTM C144, Specification for Aggregate for Masonry Mortar.
   d. ASTM C150, Specification for Portland Cement.
   e. ASTM C207, Specification for Hydrated Lime for Masonry Purposes.
   f. ASTM C404, Specification for Aggregates for Masonry Grout.
   g. ASTM C270, Specification for Mortar for Unit Masonry.
   h. ASTM C476, Specification for Grout for Masonry.

1.4 SUBMITTALS

A. The Contractor shall submit to the Engineer for approval, individual product data for each material or equipment listed below:
   1. Regional Materials.
   2. Portland Cement.
   3. Hydrated Lime.
   4. Quickline.
   5. Lime Putty.
   6. Mortar Sand.
   7. Grout Aggregates.
   8. Mortar Admixture.
   9. Color Pigment.
   10. Water.
   11. Control Joint Filler.
   12. Reinforcing.
   13. Sealer.
   14. Product Data:
   15. For each type of manufactured material and product including but not limited to the following:
   16. Admixtures for masonry grout.
   17. Admixtures for masonry mortar.
   18. Certificates on CMU.

19. Control joint keys and layout plans.

B. Samples:

1. Submit the following:

a. 2 samples of each type of masonry unit to show full range of color and texture, for selection and approval.

b. Samples of cured dry mortar showing finish color.

c. Cured sealant colors for control joints.

d. Control joint filler, 12-inch pieces of each size and type.

C. Design Mixes: Submit for mortar and grout. The Contractor shall hire a professional testing laboratory to provide a mix design. The mix design shall be verified by test and certified to by a principal of the laboratory who is a registered Civil Engineer in the State of California and submitted to the Engineer for review.

D. Reinforcing Steel Drawings: Provide reinforcing steel shop and placement drawings showing pieces numbers, quantities, grades, sizes, bar bend requirements, positions, spacing, splices, and positioners for the fabrication and placement of reinforcing steel and bar positioners prior to fabrication and installation.

E. Mill Test Reports: Provide mill test reports certifying physical and chemical properties for each heat of Grade 60 steel bar reinforcement on the Site prior to installation.

F. Certificates of Compliance:

1. The Contractor shall provide certificates of compliance for each type of aggregate, cement and admixture to be used in grout. The Contractor shall also provide certificates of compliance for each type of concrete unit masonry.

2. Certificates of compliance shall be signed by the manufacturer and Contractor, certifying that each material item complies with or exceeds specified requirements. Material certificates shall include laboratory test reports showing compliance for the material proposed for use.

3. Where certificates of compliance cannot be provided, the Contractor shall hire a professional testing laboratory to verify compliance of each type of material proposed for use. The cost of testing shall be paid for by the Contractor.

G. Laboratory Test Reports: Laboratory test reports shall show the name of testing agency, date of testing and shall be signed by an agent of the testing agency. Laboratory tests shall not be older than 8 months. Submit laboratory test reports for grout materials, concrete unit masonry and mix designs as specified.

1.5 JOB CONDITIONS

A. Inspect and verify surfaces to receive Work of this Section. Report all conditions that prevent correct installation of masonry.

1.6 QUALITY ASSURANCE

A. Standards: Conform to Chapter 21 of the CBC, ACI 530.1-13, and to standards referenced herein. In case of a conflict between standards, the most stringent requirements govern.

B. Certificates of Compliance: The Contractor shall provide certificates of compliance for concrete masonry units and grout materials in accordance with these Specifications.

C. Source Quality Control:

1. Testing laboratory shall perform following quality assurance tests:

a. Portland Cement: Furnish mill sampled and tested Portland cement and furnish certificates of compliance for each shipment of cement used; otherwise, testing laboratory shall sample and test the cement according to ASTM C150.

b. Mortar and Grout Aggregates: Furnish grading tickets from producer; otherwise, testing laboratory shall sample and test aggregates according to the material specifications.

c. Concrete Masonry Units: Test units per Section 2105.2.2.1.2 of California Building Code (CBC). Furnish manufacturer's certificate attesting that units delivered to the Site meet material and property requirements specified, including linear shrinkage requirements; otherwise, concrete masonry units shall be sampled from the material delivered to the Site by the Testing Laboratory or Engineer and tested by the Testing Laboratory as specified in ASTM C140 for conformance; test for linear shrinkage according to ASTM C426. Testing shall be completed, and units approved prior to placing units in the Work.

d. Batch Plant Inspection: If high lift grouting method is used, grout shall be batched and delivered to the Site ready-mixed from a batch plant conforming to ASTM C94 and

continuous batch plant inspection is required, performed by a specially qualified inspector approved by the EngineerCity.

D. Tolerance: Unit masonry shall be placed within 1/8 inch of dimensions noted. Reinforcement shall be placed within tolerances recommended by ACI Detailing Manual, latest edition, Special Publication, SP-66.

E. Mockups: Build mockups to set quality standard for materials and execution.

1. Build mockups for each type and pattern of exterior wall in sizes approximately 72 inches long by 48 inches high by full thickness, including accessories.
   a. Include a sealant-filled joint.
   b. Include special features and on corner angle.
2. Clean one-half of exposed faces of mockups with masonry cleaner as indicated.
3. Protect accepted mockups from the elements with weather-resistant membrane.
4. Approval of mockups is for color, texture, and blending of masonry units; relationship of mortar and sealant colors to masonry unit colors; tooling of joints; and aesthetic qualities of workmanship.
   a. Approval of mockups does not constitute approval of deviations from the Contract Documents contained in mockups unless such deviations are specifically approved by the Engineer in writing.
5. Approved mockups may become part of the completed Work.

1.7 DELIVERY, STORAGE, AND HANDLING

A. Deliver, store, and handle all material to prevent damage.

B. Ready-mixed grout shall be placed in its final position within 1-1/2 hours after water is first added to the mixture.

C. Use all means necessary to protect masonry materials before, during, and after installation and to protect the installed Work and materials of all other trades.

D. In the event of damage, immediately make all repairs and replacement necessary to the approval of the Engineer and at no cost to the City.

PART 2 PRODUCTS

2.1 BASIC MATERIALS

A. Regional Materials: Products shall be manufactured within 500 miles of Project Site from materials that have been extracted, harvested, or recovered within 500 miles of Project Site.

B. Portland Cement: ASTM C150, Type II – Low Alkali from one approved source. Mortar cement or plastic cement is not permitted.

C. Hydrated Lime: ASTM C207, Type S.

D. Quicklime: All quicklime shall conform to ASTM C5.

E. Lime Putty: All lime putty shall be made from hydrated lime or quicklime. If made from quicklime, other than pulverized (processed) quicklime, the lime shall be properly slaked and then screened through a sieve having not less than 16 meshes per linear inch. After screening, and before using, the slaked lime shall be properly stored and protected for not less than 10 days. If made from pulverized (processed) quicklime, the lime shall be properly slaked for not less than 24 hours or until the lime putty has entirely cooled. All resulting lime putty shall weigh not less than 83 pounds per cubic foot.

F. Mortar Sand: ASTM C144, minimum 3 percent passing No. 100 sieve, uniformly graded fine to coarse.

G. Grout Aggregates: ASTM C404, natural. Size No. 8 coarse aggregate. Coarse grout shall be used for all filled-cell masonry construction per CBC Section 2103.12.

H. Mortar Admixture: None without prior approval of the Engineer.

I. Grout Admixture: Sika Grout Aid II or approved equal.

J. Color Pigment: Pure ground mineral oxides, non-fading, alkali and lime proof, factory packaged, not more than 3 pounds per sack of cement, as noted on the Drawings.

K. Water: From domestic potable source.

L. Control Joint filler: Acceptable product such as Dur-O-Wal “Rapid Control Joint,” wide flange unless regular flange is shown, approved sizes, as noted on the Drawings, or approved equal.

M. Reinforcing: Comply with requirements of Section 03 20 00, “Concrete Reinforcing.”

2.2 CONCRETE BLOCK MATERIALS

A. Regional Materials: Provide CMUs that have been manufactured within 500 miles of Project Site from aggregates and cement that have been extracted, harvested, or recovered, within 500 miles of Project Site.

B. General:

1. Provide medium weight concrete masonry units complying with requirements indicated on Drawings, and the following:

   a. Steam-cured or yard air cured for 28 days, meeting Quality Control Standards of Concrete Masonry Association, natural cement color smooth faced units unless otherwise indicated or specified. Include matching jamb, lintel, control join, bond beam, wall cap, and other special shape, type, or size units as required.

C. Finish Type and Color:

1. Color and finish selection is based on the product of Angeles Block. Products named or identified by make or model number, or other designation and described below are base products. Base products establish the standards of type, function, dimension, in-service performance, physical properties, appearance, warranty, cost, and other characteristics required by the Project.

2. Basis of Design: Angeles Block Precision block finish “Dusty Brown,” or similar.

2.3 MORTAR AND GROUT PROPORTIONS AND MIXING

A. Strengths: Minimum compressive strengths as shown on the Drawings.

B. Proportions: Accurately measure all mortar and grout by the volume method using calibrated containers. Shovel measurements are not acceptable.

1. Mortar: Mortar shall conform to ASTM C270 Type S and shall develop a minimum compressive strength of 1,900 psi at 28 days. Per CBC Section 2103.2; one part Portland cement, 3-1/2 to 4-1/2 parts sand based on dry loose volume, and not less than 1/4 part nor over 1/2 part lime.

2. Grout: Grout shall be coarse grout and shall conform to ASTM C476 and shall have a minimum compressive strength of 2,500 psi at 28 days. Slump shall be 8 inches to 10 inches.

   a. Per CBC Section 2103.3 and as follows:

      1) 3 parts sand based on dry lease volume, 2 parts pea gravel, 1 part Portland cement, in compliance with ASTM C476. Mix with enough water to produce consistency for pouring without segregation.

3. Mortar Color:

   a. Basis of Design: Angeles Block “475 Spec Mix” Mortar, or similar.

C. Mixing: Place half of the required water and sand in an operating machine mixer; then add Portland cement, remainder of sand and water, and then hydrating lime. Machine mix not less than 10 minutes after all ingredients are charged.

D. Retempering: Retemper mortar within one hour after leaving the mixer and maintain mortar on the boards to a slump of 2-3/4 inches plus or minus ¼ inch using a truncated cone 4 inches by 2 inches, 6 inches high. Add water in a basin formed in the mortar and rework mortar into water. Discard all mortar that is not used within 1 hour or that has begun to initially set. Retempering of mortar by dashing water over the mortar shall not be permitted.

2.4 SEALER

A. Sealer for masonry Work shall be a clear silicone water repellent as specified in Section 07 19 00, “Water Repellents.”

PART 3 EXECUTION

3.1 INSTALLATION OF CONCRETE BLOCK MASONRY

A. Lay out unit masonry to minimize cutting of units and use of odd joint sizes or bond. Construct all masonry in accordance with Code and Concrete Masonry Association standards for reinforced masonry. Place and embed in masonry anchors, bolts, reglets, sleeves, and all other items furnished under other Sections, fully grouted in place. Do not place pipes or conduits in any structural masonry, except that rigid electric conduit may be embedded in structural masonry when its location has been detailed on the structural Contract

Drawings. Work out details and be responsible for size, position, and arrangement of embedded items and necessary openings. Cut units by machine saw. Install only clean uncracked units. Conform to CBC Section 2104.

B. Perform no Work during rain or when outside temperature is 40° F or lower, or when it appears probable that temperatures below 40° F will be encountered before the mortar or grout has set.

C. Setting: Install masonry to preserve unobstructed vertical continuity of block cells. Full bed face shells and cross webs in mortar. Fill header or end joints solid with mortar to a depth from face of wall or unit not less than the thickness of the longitudinal face shells. Provide corner bond by lapping units in successive vertical courses.

D. Cleanout Openings: Provide openings at the bottom of cells containing bar reinforcing, and at each lift or pour of grout exceeding 24 inches in height. Remove all overhanging mortar and other obstructions or debris from the interior of block cells. Seal cleanouts with matching whole units and mortar joints.

E. Reinforcing: Use deep-cut bond beam units at horizontal reinforcing bars. Install open end units for vertical bars unless otherwise shown. Hold vertical reinforcing bars in correct position at top, bottom, and intervals not over 160 bar diameters between, and secure in place with wood frames or similar devices as required for proper alignment. Install horizontal reinforcement as erection progresses, laps wire tied. Maintain a minimum 1/2 inch clear space between masonry and bars. Make laps and splices in bars not less than 48 bar diameters unless otherwise indicated.

F. Grouting – Low Lift: Fill cells with grout. Pour in 2-foot lifts, waiting about 1 hour between lifts. Pour full height in each section of the wall in one Work shift. Consolidate grout by puddling or internal vibration, then reconsolidate about 10 minutes later before plasticity is lost. Form horizontal construction joints by stopping the grout pour 1½ inches below top of masonry units. Low lift grouting shall be in accordance with the requirements of CBC Section 2104.

G. Grouting – High Lift: Placement of grout in pours higher than 5 feet shall be considered high lift grouting. High lift grout placement may be used at the Contractor's option as approved by the Engineer in accordance with CBC Section 2104, and as specified hereinafter under "Filled Cell Concrete Masonry High Lift Grouting Method."

H. Bond and Joints: Lay units with 1/2-unit running bond, vertical joints in alternate courses aligned and plumb. Make joints uniformly 3/8-inch size, concealed joints struck flush. Joints on exposed surfaces shall be raked joints. Verify all types of mortar joints with the Engineer before proceeding with block laying. Joints shall be tooled in such a manner as to squeeze the mortar back into the joints, and then raked. For joints in walls to receive waterproof membranes, use care to obtain smooth surface to receive waterproofing. Compact and dense concave tool exposed joints with 1-1/2 inches diameter plastic or similar non-staining tool. No tooling shall be done until after the mortar has taken its initial set. After tooling, the exposed surfaces shall be wiped down with burlap.

3.2 WALL CONTROL JOINTS

A. Provide vertical control joints at a spacing approximately 1.5 times the wall height, but no greater than 25 feet on center, or where shown on the Drawings. Control joint filler shall be placed for full height of each joint.

3.3 CEMENT WASH ON WALL TOPS

A. Use mortar matching masonry joints where cap block is not specified. Trowel dense and smooth with clean edges, sloped as shown, and cross score using an approved tool at nominal 32 inch centers. As soon as hardened, cover with sealed plastic sheeting and keep moist for at least 10 days after placing.

3.4 CURING

A. Keep newly constructed masonry damp for 3 days with regulated fog spray of water sufficient only to moisten faces of masonry but not in an amount as to cause water to flow down over masonry. Do not saturate masonry with water for curing or any other purposes and protect from rain or flooding during curing period.

3.5 CLEANING

A. Clean mortar and grout off exposed surfaces immediately and as the Work progresses. Acceptably repair imperfect joints, holes, defaced units, chipped edges or corners, and all other defects, or replace the defective units as required for approval. Mortar or grout staining on exposed masonry surfaces is subject

to sandblast cleaning of the entire surface involved to obtain clean uniform approved appearance, as directed and at no additional Contract cost.

3.6 PARGE COAT

A. Apply mortar parge coat on all masonry to receive any type of membrane waterproofing, troweled smooth. Keep the parge coat continuously damp for three days or spray apply black bituminous curing compound that conforms to ASTM C309.

3.7 DAMPROOFING

A. Masonry surfaces shall be sealed with a clear silicone water repellent in accordance with manufacturer's recommendations.

B. Acceptance condition of surfaces: All surfaces that are to be sealed shall be free of dust, dirt, oil, grease, and other foreign material and shall be dry to the degree required for satisfactory reception of the sealer. Surfaces shall not be acceptable for sealing if they contain cracks or voids in excess of 1/32 inch in width.

C. Moisture Content: The optimal acceptable levels of moisture are the following: Inside the substrate-14 percent; surface of substrate-7 percent, when measured by an electronic moisture meter. New concrete or masonry shall have cured for at least 40 days under normal warm-weather conditions prior to any application. Depending on the severity of a preceding rain, at least 7 days shall elapse before application. If there is any question concerning the amount of moisture in the substrate following a rain, the moisture meter shall be used to verify actual conditions. No material shall be applied if there is any chance of rain during the following 24 hours.

D. Application: Application shall be by skilled applicators approved by the manufacturer using methods and equipment approved by the manufacturer. A Hudson sprayer shall not be used.

3.8 FILLED CELL CONCRETE MASONRY HIGH LIFT GROUTING METHOD

A. General: Where high lift grouting is proposed, the method shall be approved by the Engineer and comply with CBC Section 2104.

B. Description: The high lift grouting method may be used in lieu of low lift grouting at the Contractor's option and shall be used only where openings, block pattern arrangements, special reinforcing steel or embedded structural steel do not prevent the free flow of grout or inhibit the use of mechanical vibration to properly consolidate the grout fill in cells or horizontal grout spaces. Horizontal reinforcing shall be positioned in a single vertical plane at each curtain of steel to allow maximum accessibility to the cell spaces.

1. All masonry units, reinforcing steel and embedded items shall be in place before grouting of the wall voids commences. The Work shall be so arranged that once grouting of a section of wall is started the grouting shall proceed in lifts without stopping except as noted below until the full height of the prepared section is poured. The waiting period between lifts is to be limited to the time required to obtain an initial consolidation of grout due to settlement shrinkage and absorption of excess water by the masonry units. This also allows for a reduction in hydrostatic pressure of the grout on the masonry unit and reduces the possibility of "blow-outs." The height of each lift in a given pour and the waiting period between each lift shall also be approved by the Engineer.

2. The grout shall be a high slump workable mix preferably placed by pumping to permit continuous pouring and shall be worked into all voids. Use mechanical vibrators for consolidation. Where job conditions preclude such use other methods may be employed if approved by the Engineer. Because of the high water-cement ratio used in this type of grout, the grout shall be reconsolidated after it has taken on a plastic consistency but prior to taking an initial set. The reconsolidation is intended to overcome settlement shrinkage separations from the reinforcing steel and to promote bond to the masonry unit walls.

3. Definitions: A "pour" shall mean the entire height of grout fill placed in one day and is composed of a number of successively placed grout lifts. A "lift" is the layer of grout placed in a single continuous operation.

4. The maximum height of pour is limited by the practical considerations of segregation of grout due to the height of free fall effect of dry grout deposits left on block projections and reinforcing steel and the ability to effectively reconsolidate the grout. Unless specifically approved otherwise the maximum height of pour shall be 12 feet for 8-inch walls and 16 feet for 12-inch walls.

C. Quality of Material:

1. All materials are to conform to CBC Section 2103 with the following requirements:

a. Pea Gravel: Conform to ASTM C404, Coarse Aggregate, except when other gradings are specifically approved by the Engineer.

b. Coarse Aggregate: Conform to ACI 318 Section 3.3.2.

c. Admixture: The grout shall contain an admixture of the type that reduces early water loss to the masonry units and produces an expansive action in the plastic grout sufficient to offset initial shrinkage and promote bonding of the grout to all interior surfaces of the masonry units. Obtain approval of the Engineer for use of the admixture.

D. Mortar and Grout:

1. Mortar: Comply with CBC Section 2103.8 and the following additional requirements. Place approximately half of the required water and sand into the mixer while running. Add cement and the remainder of the sand and water into the mixer in that order and mix for a period of at least 2 minutes. Add lime and continue mixing as long as needed to secure a uniform mass. The total mixing time may not be less than 10 minutes.

2. Grout: Comply with CBC Section 2103.12. An approval of grout mix design is also required by the Engineer.

a. Sufficient water may be added to make a workable mix that will flow into all joints of the masonry without separation or segregation when grout is to be placed in masonry units with typical rates of absorption. The slump of the grout shall be approximately 9 inches to 10 inches depending on temperature and humidity conditions.

b. Where the least lateral dimension of cells to be filled exceeds 5 inches a coarser aggregate may be used in the grout fill if the mix is designed in accordance with Chapter 4, ACI 318. The maximum size of aggregate shall not exceed 1 inch. The water per sack of cement may be greater than is shown in CBC Table 2103.12 to allow for absorption by the masonry units and with sufficient workability to meet the requirements herein.

c. Grout mixes shall contain an approved admixture conforming to the requirements herein. Use such admixture strictly in accordance with the manufacturer's instructions.

3. Mixing of Grout: The mixing of grout shall conform to the requirements for mixing of concrete, Section 5.2 of ACI 318. Mix and deliver grout in accordance with the requirements for transit mixed concrete. Time the admixture addition in strict accordance with the manufacturer's instructions. The procedure used for adding it to the grout mix shall provide for good dispersion.

4. Certification:

a. The quality and quantity of each material used in transit-mixed grout shall be continuously checked by a qualified person at the location where the materials are measured. If permitted by the Engineer, certification concerning quantity of materials may be accepted from a licensed weighmaster in lieu of continuous plant inspection if the following procedures are used to check the quality of the materials to be used in the grout:

1) Test samples of the aggregate to be used in the grout are taken and tested by the testing laboratory in accordance with ASTM C404.

2) The transit-mix grout supplier uses a mix design for the proportions of cement, sand and pea gravel or coarse aggregate prepared by a qualified person or approved testing laboratory and approved by the Engineer.

3) On the first half day transit mixed grout is supplied to the job, and at such other times as may be required by the Engineer, the quantity and quality of materials used in the transit mixed grout are continuously checked by an approved Contractor's inspector at the batch plant location. In addition to the quality of the aggregate, the inspector shall verify the quality of the cement.

4) The licensed weighmaster shall certify to each load on a load ticket transmitted to the Engineer and furnish an affidavit at the completion of the CMU work.

5. Tests: Testing of mortar and grout shall conform to CBC Section 2105.2.

E. Construction: High lift concrete block masonry Work shall conform to Chapter 21 of the CBC and with the following additional requirements:

1. Foundations: The contact surface of all foundations and floors to receive masonry Work shall be thoroughly cleaned and roughened in accordance with ACI 318, Section 6.4, before start of laying. Protect the roughened surface during construction to assure a good bond between the grout fill and the concrete surface.

2. Cleanouts: Provide cleanout openings in every cell for all walls at the bottom of each pour. The openings are to be made prior to start of laying and be of sufficient size and location to allow thorough flushing away of all mortar droppings and debris. After the laying of the masonry units is completed, the cells cleaned, the reinforcing positioned, and inspection completed, close the

cleanouts by inserting face shells of masonry units or covering the openings with forms. Face shell plugs shall have a two-day minimum curing time and shall be adequately braced to resist the pressure of the fluid grout.

3. Reinforcement: Place all reinforcing steel accurately in strict accordance with the Drawings. Both horizontal and vertical reinforcing shall be held in position by wire ties or spacing devices near ends and at intervals not exceeding 160 diameters of the reinforcement. Place the horizontal reinforcing as the Work progresses. The vertical reinforcing may be dropped into position after the completion of the laying if adequate positioning devices are provided to hold the reinforcement in proper location.
4. Masonry Units: Use open end concrete masonry units wherever possible. Bond beam units shall be used wherever possible to facilitate the horizontal flow of grout and shall be used at all horizontal bars to provide a minimum vertical opening at all cross webs 3 inches high by 4 inches wide. The concrete masonry units need not be wetted before laying except in dry areas where the contact surfaces of the units shall be moistened immediately before laying to prevent excessive drying of mortar.
5. Laying: Fill all head and bed joints solidly with mortar for a distance in from the face of the unit not less than the thickness of the face shell. Use in placing the mortar to keep a minimum of droppings from falling into the block cells.
6. Wall ties and Bracing: When stacked bond is used or when adequate cross webs between face shells are not provided, ties of heavy gauge wire embedded in the horizontal mortar joints shall be provided across continuous vertical joints or between face shells to prevent “blow-outs” due to the hydrostatic pressure of the fluid grout. External ties or braces may also be used for the purpose. Brace the ungrouted walls adequately to resist wind and other forces.
7. Mortar Droppings and Overhangs: Thoroughly remove all mortar droppings and overhangs from the foundation or bearing surface, cell walls, and reinforcing. Acceptable methods for this are by hosing with a jet stream at least twice a day (at midday and end of workday) or by providing a 2-inch or 3-inch blanket of dry sand over the exposed surface of the foundation, dislodging any hardened mortar from the cell walls and reinforcing with a pole or rod and removing the mortar debris with the sand cover prior to clean up and grouting.
8. Construction Joints in the High Lift Grouting Method: Intermediate horizontal construction joints are not permitted. Plan the Work for one continuous pour of grout to the top of the wall in 4-foot layers or lifts in the same working day. Should ”blow-outs,” a breakdown in equipment, or any other emergency occur, cease the grouting operation. An alternate procedure may be used with the approval of the Engineer.
    a. The section of wall to be grouted in any one pour is limited to a length in which successive lifts can be placed within 1 hour of the preceding lifts. Vertical control barriers shall be placed between pour sections in locations approved by the Engineer.
9. Grouting: To prevent “blow-outs” do not grout until the mortar has been set and cured. However, grout the walls as soon as possible after mortar has cured to reduce shrinkage and cracking of the vertical joints. All cleanout closures, reinforcing, bolts, and embedded connection items shall be in position before grouting is started.
    a. Handle grout from the mixer to the point of deposit in the grout space as rapidly as practical by pumping and placing methods which shall prevent segregation of the mix and cause a minimum of grout splatter on reinforcing and masonry unit surfaces not being immediately encased in the grout lift. Depending upon weather conditions and absorption rates of the masonry units, the lift heights and waiting periods may be varied. Under normal weather conditions with typical masonry units the individual lifts of grout are limited to 4 feet in height with a waiting period between lifts of 30 minutes to 60 minutes.
    b. Place the first lift of grout to a uniform height within the pour section and mechanically vibrate thoroughly to fill all voids. The grouting team shall be organized to enable the vibration to follow closely behind and at the same pace as the pouring operation.
    c. After a waiting period sufficient to permit the grout to become plastic but before it has taken any set, the succeeding lift shall be poured and alternate cells vibrated 12 inches to 18 inches into the preceding lift. Do this in such a manner as to reconsolidate the preceding lift and close any plastic shrinkage cracks or separations from the cell walls.
    d. If job conditions preclude the placing of the succeeding lift beyond the period of workability of the preceding lift, reconsolidate each lift by reworking the mechanical vibrator as soon as the grout has taken its settlement shrinkage.

e. Repeat the waiting, pouring, and reconsolidation steps until the top of the pour is reached. Reconsolidate the top lift after the required waiting period to fill any space left by settlement shrinkage.

10. Cleaning Wall: Immediately after the wall has been fully grouted, hose off with water under pressure through a jet nozzle all the detritus and stains which have percolated through the blocks and joints.

11. Curing: Attention shall be given to proper curing of the mortar joints as well as the grout concrete pour. The concrete block Work and top of the grout pour shall be kept damp to prevent too rapid drying during hot or drying weather and drying winds.

3.9 INSPECTION AND TESTING

A. Masonry Testing and Inspection Services: The City shall engage a qualified independent testing agency to perform evaluation tests and special inspections per General Structural Notes on the Contract Plans and as required by the Code. Personnel conducting field tests shall be qualified as City of Long Beach Structural Masonry Inspectors.

B. Inspection: All masonry Work is required to be continuously inspected during laying and grouting by an inspector specially approved for that purpose. The inspector shall make test samples and perform such tests as are required and shall check the materials, details of construction, and construction procedures. The Contractor shall cooperate with and notify the Engineer at least 48 hours in advance of inspections required.

1. The special masonry inspector, per CBC Section 1704.5.2 shall check the materials, details of construction, and construction procedure. The special inspector shall furnish a verified report that, of their own personal knowledge, the Work covered by the report has been performed, and materials used and installed in every material respect in compliance with the approved Drawings and these Specifications.

3.10 FIELD QUALITY CONTROL

A. Coordinate with the Engineer for required inspection and testing as in Article “Inspection and Testing,” above.

B. Mortar and Grout Testing: A testing laboratory contracted by the City shall test mortar and grout in accordance with CBC Section 2105.2 including additional sampling and testing as required by the Engineer.

C. Prism Testing: A testing laboratory shall provide prism tests constructed and tested per ASTM C1314. The quantity of prisms shall be 5 prisms prior to the start of construction and 3 prisms during wall construction per every 5,000 square feet of masonry wall area constructed.

D. Test Results: Test reports shall be submitted in writing to the Engineer and Contractor within 7 days after tests are made. Test results not in compliance with requirements of these Specifications shall be reported verbally to the Engineer and Contractor within 24 hours of the tests. Reports of compressive strength test shall contain the Project identifications name and number, date of grout or mortar placements, name of testing service, product type and class, location of batch in structure, design compressive strength at 28 days, concrete mix proportions and materials; compressive breaking strength and type of break for both 7-day tests and 28-day tests.

E. Additional Tests: The Testing Laboratory shall make additional tests of in-place masonry and grout when test results indicate specified strengths and other characteristics have not been attained in the structure, by methods as directed by the Engineer. The Contractor shall pay for such tests conducted, and any other additional testing as may be required, when unacceptable masonry construction is verified.

PART 4 MEASUREMENT AND PAYMENT

4.1 CONCRETE MASONRY UNIT WORK AS SPECIFIED HEREIN SHALL BE INCLUDED IN THE MEASUREMENT AND PAYMENT FOR “PUMP STATION” AS DESCRIBED IN SECTION 03 30 00.

A. No separate measurement and payment will be made for any other Work covered by this Section. The cost of any other Work shall be considered incidental.

B. Measurement. This Item shall be measured by the squarelinear foot of wall, complete and in place at the locations designated on the plans.

C. Payment. The work Work performed and materials furnished in accordance with this item and measured as provided under “Measurement” will be paid for at the price bid for wall type and size specified. This price is full compensation for furnishing, preparing, hauling, and erecting all materials, for transportation, freight, excavation, backfilling, all labor, tools, equipment, and incidentals necessary to complete Work.

END OF SECTION

SECTION 050522 - WELDING

PART 1 GENERAL

1.1 SUMMARY

A. This Section includes:
   1. Welding Rod/Electrodes.
   2. Stud Shear Connectors.
   3. Shop Welding.
   4. Inspections and Tests by the Contractor. Inspections and Tests by the Engineer.
   5. Field Welding.

1.2 RELATED SECTIONS

A. A. Welding of reinforcing steel for concrete is specified in Section 03 20 00, Concrete Reinforcing.
B. B. Welding and brazing of piping for plumbing and mechanical systems are specified under the applicable Sections.

1.3 REFERENCES

A. The following publications form a part of this Specification to the extent referenced. The publications are referred to in the text by the basic designation only. The latest edition of the applicable publication in effect on the date the Project is advertised shall be used.
   1. American National Standards Institute (ANSI)/American Institute of Steel Construction (AISC):
      a. ANSI/AISC 341 Seismic Provisions for Structural Steel Buildings
      b. ANSI/AISC 360 Specifications for Structural Steel Buildings
   2. American Society for Nondestructive Testing (ASNT):
      a. SNT-TC-1A Recommended Practice
   3. American Welding Society (AWS):
      a. AWS A2.4 Standard Symbols for Welding, Brazing and Nondestructive Examination
      b. AWS A3.0 Standard Welding Terms and Definitions, Including Terms for Brazing, Soldering, Thermal Spraying and Thermal Cutting
      c. AWS A5 Welding Rods, Electrodes, and Filler Metals Series
      d. AWS B1.10 Guide for the Nondestructive Inspection of Welds
      e. AWS C5.4 Recommended Practices for Stud Welding
      f. AWS D1.1 Structural Welding Code – Steel
      g. AWS D1.2 Structural Welding Code – Aluminum
      h. AWS D1.3 Structural Welding Code – Sheet Steel
      i. AWS D1.4 Structural Welding Code – Reinforcing Steel
      j. AWS D1.5 Bridge Welding Code
      k. AWS D1.8 Structural Welding Code – Seismic Supplement
      l. WS D9.1 Sheet Metal Welding Code
      m. AWS D10.4 Recommended Practices for Welding Austenitic Chromium-Nickel Stainless Steel Piping and Tubing
      n. AWS D10.9 Specification for Qualification of Welding Procedures and Welders for Piping and Tubing
      o. AWS QC1 Standard for AWS Certification of Welding Inspectors
   4. American Society for Testing and MaterialsASTM International (ASTM):
      a. ASTM E94 Guide for Radiographic Testing
      b. ASTM E142 Method for Controlling Quality of Radiographic Testing
      c. ASTM E164 Practice for Ultrasonic Contact Examination of Weldments
      d. ASTM E165 Test Method for Liquid Penetrant Inspection Method
      e. ASTM E1032 Method for Radiographic Examination of Weldments

5. American Welding Society (AWS):
   a. AWS A2.4 Standard Symbols for Welding, Brazing and Nondestructive Examination
   b. AWS A3.0 Standard Welding Terms and Definitions, Including Terms for Brazing, Soldering, Thermal Spraying and Thermal Cutting
   c. AWS A5 Welding Rods, Electrodes, and Filler Metals Series
   d. AWS B1.10 Guide for the Nondestructive Inspection of Welds
   e. AWS C5.4 Recommended Practices for Stud Welding
   f. AWS D1.1 Structural Welding Code – Steel
   g. AWS D1.2 Structural Welding Code – Aluminum
   h. AWS D1.3 Structural Welding Code – Sheet Steel
   i. AWS D1.4 Structural Welding Code – Reinforcing Steel
   j. AWS D1.5 Bridge Welding Code
   k. AWS D1.8 Structural Welding Code – Seismic Supplement
   l. AWS D9.1 Sheet Metal Welding Code
   m. AWS D10.4 Recommended Practices for Welding Austenitic Chromium- Nickel Stainless Steel Piping and Tubing
   n. AWS D10.9 Specification for Qualification of Welding Procedures and Welders for Piping and Tubing
   o. AWS QC1 Standard for AWS Certification of Welding Inspectors

1.4 REGULATORY REQUIREMENTS

A. In addition to the foregoing referenced standards, the regulatory requirements that govern the Work of this Section include the following code:
   1. California Code of Regulations, Title 24, Part 2, California Building Code.

1.5 SUBMITTALS

A. General: Refer to Section 01 33 00, “Submittal Procedures,” and Section 01 33 23, Shop Drawings, Product Data, and Samples, for submittal requirements and procedures. For shop drawings and other submittals, employ the standard welding symbols of AWS A2.4 and the standard welding terms of AWS A3.0.

B. Welder Qualifications: Submit copies of qualification test records for each welder, welding operator, and tack welder to be employed in the Work. Comply with requirements of AWS D1.1. For bridgework, comply with requirements of AWS D1.5. For seismic provisions, comply with requirement of AWS D1.8. For aluminum welders, comply with AWS D1.2. For pipe and tube, comply with requirements of AWS D10.9.
   1. Submit welders’ identification marks (I.D.) for each welder along with qualifications.

C. Welding Procedure Specifications (WPS): Prior to commencement of welding, submit the procedure specifications that shall be used for welding. The WPS shall contain all data indicated in AWS D1.1 Annex IV, and any other information necessary to produce welded joints in compliance with this Specification. For procedures other than those prequalified in accordance with AWS D1.1, D1.2, D1.5, and D1.8, submit a copy of procedure qualification test records in accordance with the qualification requirements of AWS D1.1, AWS D1.2, AWS D1.5, and AWS D1.8 as applicable. WPS shall also include the mitigation of corrosion of welds, including heat treatment and chemical compatibility, as applicable.

D. Welding Records and Data:
   1. Submit all radiographs upon completion of fabrication.
   2. Submit certifications that dye-penetrant inspections have been satisfactorily completed.
   3. Submit records of ultrasonic testing upon completion.
   4. If field welding is permitted, submit descriptive data for field welding equipment.

E. Mill Certificates: Submit mill certificates and certified copy of reports for analyses and tests required by referenced ASTM and AWS specifications.

F. The Contractor shall submit to the Engineer for approval, individual product data for each material or equipment listed below:
   1. Welding rod/electrodes.
   2. Stud shear connectors.

1.6 QUALITY ASSURANCE

A. Qualification of Welders and Welding Procedures: Welders, welding operators, tack welders, and welding procedures shall be prequalified or qualified in accordance with the following AWS Welding Codes and Standards:
   1. Structural Steel: AWS D1.1, Section 4, Qualification. Includes steel for miscellaneous metalwork, steel stairs, and railings.
   2. Stud Welding: AWS D1.1, Section 7.6, Stud Application Qualification Requirements.
   3. Structural Aluminum: AWS D1.2, Section 5, Qualification of Procedures and Personnel.
   4. Sheet Steel (Structural): AWS D1.3, Section 6, Qualification. Prequalification is not applicable to sheet steel.
   5. Concrete Reinforcing Steel: AWS D1.4, Section 6, Qualification. Coordinate with requirements specified in Section 03 20 00, “Concrete Reinforcing.”
   6. Seismic Supplement: AWS D1.8, Section 5, Welder Qualification.
   7. Sheet Metal:
      a. Welders: AWS D9.1, Section 4, Qualification of Arc Welders and Arc Welding Operators, and Section 9, Qualification of Braze Welders and Braze Welding Operators.
      b. Welding Procedures: AWS D9.1, Section 3, Arc Welding Procedure Qualification, and Section 8, Braze Welding Procedure Qualification.
   8. Pipe and Tube: AWS D10.9
B. Qualification of Welding Inspector: Welds performed by the Contractor shall be inspected and certified by a City Inspector who will be certified in accordance with AWS QC1.
C. Qualification of Personnel Performing Nondestructive Testing: Personnel performing nondestructive testing, who are Contractor-employed, shall be qualified and certified in accordance with SNT-TC-1A. Only persons certified for NDT Level I and working under an NDT Level II person or persons certified for NDT Level II may perform nondestructive testing.
D. Weldability of Steel: For structural steel requiring impact test qualification and for corrosion-resistant structural steel, the weldability of the steel and the procedures for welding it shall be established by qualification in accordance with AWS D1.1, Section 4.
E. Qualification of Stud-Connector Manufacturer: Stud shear connector manufacturer shall be qualified in accordance with AWS D1.1, Manufacturers Stud Base Qualification Requirements.
F. Stud Welding Standards: For stud welding, comply with applicable requirements of AWS C5.4 for steel and stainless steel, and AWS D1.2, Section 7, for aluminum.
G. Moment-Resisting Frames: Welding of beam-to-column joint connections in moment-resisting frames shall conform to ANSI/AISC 341, ANSI/AISC 360, and AWS D1.8.
H. Iron Contamination of Stainless Steel: Iron contamination of stainless steel shall not be accepted. Welds shall be ground smooth and polished at the factory to blend in with the surrounding finish surfaces.

PART 2 PRODUCTS

2.1 WELDING ROD/ELECTRODES

A. Electrodes for structural plate, shapes, pipe, tubes, and bars shall conform to AWS A5 Series Standards and shall be coated rods or wire of size and classification number as recommended by their manufacturers for the positions and other conditions of actual use. Matching filler metal requirements shall conform to AWS D1.1, AWS D1.5 and AWS D1.8, as applicable.
B. Electrodes for sheet steel shall conform to AWS A5 Series Standards and shall be coated rods or wire of size and classification number as recommended by their manufacturers for the positions and other conditions of actual use. Matching filler metal requirements shall conform to AWS D1.3.
C. Welding electrodes and welding rods for stainless steel shall conform to AWS A5.4 and AWS A5.9 as recommended by their manufacturers for the positions and other conditions of actual use. Matching filler metals shall be compatible with the Type 316 or Type 304 stainless steel, as applicable.
D. Electrodes for aluminum shall conform to AWS A5.10 Series Standards and shall be coated rods or wire of size and classification number as recommended by their manufacturers for the positions and other conditions of actual use. Matching filler metal requirements shall conform to AWS D1.2.

2.2 STUD SHEAR CONNECTORS

A. Only products of manufacturers qualified in accordance with AWS D1.1 shall be accepted for this Work.

2.3 SHOP WELDING

A. Perform shop welding as indicated in accordance with the California Building Code, AWS D1.1, AWS D1.2, AWS D1.3, AWS D1.5, AWS D1.8, and AWS D9.1, as applicable to the Work.

B. Welders shall mark adjacent to completed welds their welder I.D., using metal stamp, metal engraving, keel, paint stick, or other appropriate marking material.

C. Welding of stud shear connectors shall conform to AWS D1.1, Section 7, Stud Welding, AWS C5.4, Practices for stud welding and the stud manufacturer's instructions.

D. Welding of stainless-steel pipe and tube shall conform to applicable requirements of AWS D10.4.

2.4 INSPECTIONS AND TESTS BY THE CONTRACTOR

A. Testing and Inspection: Testing and inspection of welds shall proceed 24 hours after the completion of welding unless the Engineer has approved for a later time.

B. Visual Inspection: All welds shall be visibly examined in accordance with AWS D1.1, AWS D1.5, and AWS D1.8, as applicable. Quality of welds and standards of acceptance shall be in accordance with AWS D1.1 and AWS D1.5.

C. Nondestructive Testing: Nondestructive testing shall conform to AWS B1.10.

D. Radiographic Testing: Radiographic testing of welds shall conform to AWS D1.1, AWS D1.5, ASTM E94, ASTM E142, and ASTM E0132, as applicable. Complete joint penetration groove welds shall be tested as follows:

1. 10 percent with thickness equal to or less than 3/4 inch.
2. 50 percent with thickness greater than 3/4 inch and equal to or less than 1½ inches.
3. 100 percent for thickness greater than 1-1/2 inches.

E. Ultrasonic Testing: Ultrasonic testing of welds shall conform to AWS D1.1, AWS D1.5, and ASTM E164, as applicable. Complete joint penetration groove welds not accessible for radiographic testing shall, with the Engineer's approval, be subjected to ultrasonic testing. The extent shall be the same as specified for radiographic testing.

F. Liquid Penetrant Inspection: Liquid dye penetrant inspection of welds shall conform to ASTM E165. Liquid penetrant inspection shall be used for detecting discontinuities that are open to the surface.

G. Test Results: Test result information shall be forwarded to the Engineer immediately after test results are available, stating the acceptance or rejection of fabricated components, so that repairs and reinspection or testing may be performed as soon as possible.

H. Testing for Unacceptable Welds: If the herein-specified testing or inspection indicated any failure weld or resulted in any unacceptable weld, the Contractor shall perform the same testing or inspection on a separate batch of welds other than the batches that were tested. This process shall be repeated until all welds in the same batch have passed the testing or inspection and are accepted by the Engineer.

I. Repairs: Unacceptable welds shall be repaired in accordance with AWS D1.1, AWS D1.5, and AWS D1.8, as applicable. Repaired or corrected welds shall be reinspected or retested as specified for the original weld.

2.5 INSPECTIONS AND TESTS BY THE ENGINEER

A. All welds are subject to inspections and tests by the Engineer as specified herein. Welds to be inspected and tested by the Engineer shall be selected at random.

B. The Engineer will make test results available to the Contractor.

PART 3 EXECUTION

3.1 FIELD WELDING

A. Field welding, where indicated or permitted by the Engineer, shall be performed as herein specified for shop welding and comply with Cal/OSHA requirements. The Contractor shall identify a risk for fire damage and maintain a fire watch during the Work as approved by the Engineer.

3.2 INSPECTIONS AND TESTS

A. The Contractor shall perform inspections and tests of field welds as herein specified for shop welds.
B. The Engineer reserves the right to perform inspections and tests of field welds as herein specified for shop welds.

3.3 CLEANING

A. Welds shall be cleaned in accordance with AWS D1.1.
B. Welds of stainless steel shall be cleaned and shall be protected from damage and corrosion at the factory, during shipping, and at the Job Site until acceptance of the Work by the Engineer.

PART 4 MEASUREMENT AND PAYMENT

4.1 NO SEPARATE MEASUREMENT AND PAYMENT WILL BE MADE FOR ANY WORK COVERED BY THIS SECTION. THE COST OF THIS WORK SHALL BE CONSIDERED INCIDENTAL TO AND INCLUDED IN THE PRICES OF OTHER RELATED WORK PROVIDED IN THE SCHEDULE OF BID ITEMS.

END OF SECTION

SECTION 051200 - STRUCTURAL STEEL FRAMING

PART 1 GENERAL

1.1 SUMMARY

A. Section includes:
   1. Structural steel, including the fabrication and erection of support and bracing members, including connections.
   2. Connection detail design as required.

1.2 RELATED SECTIONS

A. Section 03 31 00, “Structural Concrete”
B. Section 03 30 00, “Cast-in-Place Concrete”
C. Section 05 50 13, “Miscellaneous Metal Fabrications”
D. Section 09 90 00, “Painting and Coatings”

1.3 REFERENCES

A. The following publications form a part of this Specification to the extent referenced. The publications are referred to in the text by the basic designation only. The latest edition of the applicable publication in effect on the date the Project is advertised shall be used.
   1. American Institute of Steel Construction (AISC):
      a. AISC 303, Code of Standard Practice for Steel Buildings and Bridges.
      b. AISC 360, Specifications for Structural Steel Buildings.
      c. Quality Certification Program for Fabricators.
   2. American Society of Mechanical Engineers (ASME):
      a. ASME B18.21.1, Washers: Helical Spring-Lock, Tooth Lock, and Plain Washers (Inch Series).
   3. ASTM International (ASTM):
      a. ASTM A2, Standard Specification for Carbon Steel Girder Rails of Plain, Grooved, and Guard Types.
      b. ASTM A6/A6M, Standard Specification for General Requirements for Rolled Structural Steel Bars, Plates, Shapes, and Sheet Piling.
      c. ASTM A36/A36M, Standard Specification for Carbon Structural Steel.
      d. ASTM A53/A53M, Standard Specification for Pipe, Steel, Black and Hot-Dipped, Zinc-Coated, Welded and Seamless.
      e. ASTM A108, Standard Specification for Steel Bar, Carbon and Alloy, Cold-Finished.
      f. ASTM A123/A123M, Standard Specification for Zinc (Hot-Dip Galvanized) Coatings on Iron and Steel Products.
      g. ASTM A153/A153M, Standard Specification for Zinc Coating (Hot-Dip) on Iron and Steel Hardware.
      h. ASTM A276/276M, Standard Specification for Stainless Steel Bars and Shapes
      i. ASTM A307, Standard Specification for Carbon Steel Bolts and Studs, 60,000 PSI Tensile Strength.
      j. ASTM A500/A500M, Standard Specification for Cold-Formed Welded and Seamless Carbon Steel Structural Tubing in Rounds and Shapes.
      k. ASTM A563, Standard Specification for Carbon and Alloy Steel Nuts.
      l. ASTM A709, Standard Specification for Structural Steel for Bridges.
      m. ASTM A992/A992M, Standard Specification for Structural Steel Shapes.
      n. ASTM A1064/A1064M, Standard Specification for Steel Wire and Welded Wire Reinforcement, Plain and Deformed, for Concrete.
      o. ASTM F436, Standard Specification for Hardened Steel Washers.
      p. ASTM F593, Standard Specification for Stainless Steel Bolts, Hex Cap Screws and Studs

q. ASTM F594, Standard Specification for Stainless Steel Nuts
r. ASTM F959, Standard Specification for Compressible-Washer-Type Direct Tension Indicators for Use with Structural Fasteners.
s. ASTM F1554, Standard Specification for Anchor Bolts, Steel, 36, 55, and 105-ksi Yield Strength.
t. ASTM F3125, Standard Specification for High Strength Structural Bolts, Steel and Alloy Steel, Heat Treated, 120 KSI (830 MPa) and 150 KSI (1040 MPa) Minimum Tensile Strength, Inch and Metric Dimensions.

4. American Welding Society (AWS):
   a. AWS A5.1/A5.1M, Specification for Carbon Steel Electrodes for Shielded Metal Arc Welding.
   b. AWS A5.5/A5.5M, Specification for Low-Alloy Steel Electrodes for Shielded Metal Arc Welding.
   c. AWS A5.17/A5.17M, Specification for Carbon Steel Electrodes and Fluxes for Submerged Arc Welding.
   d. AWS A5.18/A5.18M, Specification for Carbon Steel Electrodes and Rods for Gas Shielded Arc Welding.
   e. AWS A5.20/A5.20M, Specification for Carbon Steel Electrodes for Flux Cored Arc Welding.
   f. AWS A5.23/A5.23M, Specification for Low-Alloy Steel Electrodes and Fluxes for Submerged Arc Welding.
   g. AWS A5.28/A5.28M, Specification for Low-Alloy Steel Electrodes and Rods for Gas Shielded Arc Welding.
   h. AWS A5.29/A5.29M, Specification for Low-Alloy Steel Electrodes for Flux Cored Arc Welding.
   i. AWS D1.1/D1.1M, Structural Welding Code - Steel.
      1) Steel stud connectors and their installation to comply with requirements of AWS D1.1/D1.1M.
5. California Department of Transportation (Caltrans):
   a. Environmental Product Declaration (EPD) per Buy Clean California Act.
6. National Institute of Steel Detailing (NISD).
7. Research Council on Structural Connections (RCSC):
   a. Specification for Structural Joints Using High-Strength Bolts.

1.4 QUALITY ASSURANCE

A. Qualifications:
   1. Steel fabricator:
      a. Minimum of 10 years of experience in fabrication of structural steel.
      b. Fabricator plant quality control and inspection program: Meet requirements of the building code and/or be an approved fabricator.
      c. Plants that are not an approved fabricator may be acceptable, provided:
         1) The plant meets all remaining qualifications.
         2) The Contractor pays for the additional cost of required Special Inspection services.
   2. Steel erector:
      a. Minimum of 10 years of experience in erection of structural steel similar in the scope of this Project.
      b. With an active and enforced quality assurance program in place, as described in the applicable Codes.
   3. Qualify welding procedures and welding operators in accordance with AWS.

1.5 DEFINITIONS

A. Owner: May mean the Owner’s Designated Representative for Construction as defined by the AISC 303.
B. Galvanizing: Hot-dipped galvanizing per ASTM A153/A153M and/or ASTM A123/A123M with minimum coating of 2.0 ounces of zinc per square foot of metal (average of specimens) unless noted otherwise or dictated by aforementioned standards.

C. Approved Fabricator: Approved by the Building Official to perform the building code required Special Inspections.

1.6 SUBMITTALS

A. Shop Drawings:
1. Product technical data including:
a. Acknowledgement that products submitted meet requirements of standards referenced.
b. The Contractor shall submit to the Engineer for approval, individual product data for each material or equipment listed below:
1) Steel, structural shapes and plate.
2) Structural steel pipe.
3) Hollow structural sections.
4) High-strength bolts, nuts, and washers.
5) Bolts, non-high strength
6) Structural steel washer, plain.
7) Structural steel welding electrodes.
8) Structural steel anchor rods and bolts.
9) Structural steel headed studs and deformed bar anchors.
10) Structural steel crane rails.
11) Structural steel mechanical and adhesive anchor bolts for fastening to concrete.
12) Shop coating.
c. Manufacturer's installation instructions.
d. Detailed supplemental specification relating to load indicator washers or high-strength bolts.
1) Alternate design for Engineer approval submitted at the Contractor's option if desired by the Contractor for use.
e. Source and certification of quality for high-strength bolts, nuts, and washers.
2. Fabrication and/or layout drawings:
a. Prepare shop drawings under NISD Quality Procedures Program certification.
b. Complete shop drawings for all of the Work clearly showing all pieces, sizes, dimensions, details, connections materials, and shop coatings.
1) All shop drawings shall be checked and signed "approved" before submittal.
2) Show all cuts, copes, and holes.
3) Indicate all shop and field bolts.
4) Indicate all shop and field welds using AWS symbols.
c. Prepare complete erection drawings showing the location and marks of all pieces.
1) Copies of up-to-date erection drawings shall accompany the Shop drawings.
2) Use match marks on the erection drawings to indicate the sheet number on which each particular member is detailed.
d. Correct any incorrect or unacceptable material or fabrication due to incorrect detailing, shop Work, or erection, without additional charge.
3. Certifications:
a. Certificates of compliance with standards specified for all major components and fasteners incorporated into Work.
b. Copies of current welding certificates for each welder assigned to perform welding indicating compliance with testing specified by AWS.
c. Welder qualification data and prequalified procedures.
d. Special Inspections reports.
e. Source Quality Control Documentation, including certificate of compliance stating that the Work performed in the fabrication shop was done in accordance with the approved Contract Documents.
1) Certification is required only if the fabricator is the fabricator approved by the Building Official.
4. Test reports:
a. Certified copies of mill tests.
b. Manufacturer's load test and temperature sensitivity data for post-installed anchor bolts.
c. Test reports for all structural steel Work.

1.7 DELIVERY, STORAGE, AND HANDLING

A. Handle and store steel members above ground on skids or other supports.
   1. Keep free of dirt and other foreign material and protect against corrosion.

PART 2 PRODUCTS

2.1 MANUFACTURERS

A. Subject to compliance with the Contract Documents, the following manufacturers are acceptable, or approved equal:
   1. High-strength bolts:
      a. Portland Bolt and Manufacturing Company.
      b. Lewis Bolt & Nut Company.
      c. Nucor Fasteners.
      d. St. Louis Screw and Bolt Company.
   2. Load indicator washers for high-strength bolts:
      a. Portland Bolt and Manufacturing Company.
      b. Mid-South Bolt and Screw Co., Inc.
      c. J and M Turner, Inc.
   3. Alternate design high-strength bolts:
      a. T. C. Bolt Corporation.
      b. Construction Fastener Systems Division of Bristol Machine Company.
      c. LeJuene Bolt Co.
   4. Headed studs and deformed bar anchors:
      a. Nelson Stud Welding Division, TRW, Inc.
      b. Stud Welding Products, Inc.
   5. Mechanical anchor bolts:
      a. See Section 03 15 19, “Cast-In Concrete Anchors.”
   6. Adhesive anchors bolts:
      a. See Section 03 15 19, “Cast-In Concrete Anchors.”
   7. Anchor bolt sleeves:
      a. Sinco/Wilson.
   8. Bridge crane rails:
      a. See Section 41 22 13.13 “Bridge Cranes”

2.2 MATERIALS

A. Steel, Structural Shapes and Plate (unless noted otherwise on Drawings):
   1. All W-shapes and WT-shapes: ASTM A992/A992M.
   2. All other plates, bars and rolled shapes: ASTM A36/A36M.
   3. The following shall apply within the Wetwell Structure:
      a. All structural shapes shall be Type 316 stainless steel per ASTM A276/A276M.
B. Pipe: ASTM A53/A53M, Grade B (Type E or S) (Fy=35).
C. Hollow Structural Sections (HSS):
   1. Round: ASTM A500/A500M, Grade B (Fy=42).
   2. Square or rectangular: ASTM A500/A500M, Grade B (Fy=46).
   3. The following shall apply within the Wetwell Structure:
      a. All structural shapes shall be Type 316 stainless steel per ASTM A276/A276M.
D. High-Strength Bolts, Nuts, and Washers:
   1. ASTM F3125, Grade A325, Grade F1852, or Grade A490 with ASTM A563 nuts [galvanized]:
   2. High-strength bolts:
      a. Provide two ASTM F436 washers for all bolts [galvanized].

b. Provide beveled washers at connections of sloped/tapered sections.

3. High-strength bolts with compressible washer type direct tension indicators (DTI), ASTM F959.

a. Provide at the Contractor's option and subject to approval of the Engineer.

4. Alternate high-strength design: Provide at the Contractor's option and subject to approval of the Engineer.

5. The following shall apply within the Wetwell Structure

a. All bolts, nuts, and washers shall be per ASTM F593 and ASTM F594.

E. Bolts, Non-high Strength: ASTM A307, Grade A.

F. Threaded Rod: ASTM F1554, Grade 36.

G. Washers, Plain (for Non-high Strength Bolts): ASME B18.22.1, Type B.

H. Welding Electrodes:

1. Shielded metal arc: See Specification Section 05 05 22.

2. Submerged arc: See Specification Section 05 05 22.

3. Gas metal arc: See Specification Section 05 05 22.

4. Flux cored arc: See Specification Section 05 05 22.

I. Anchor Rods and Bolts:

1. See Section 03 15 19, "Cast-in Concrete Anchors."

J. Headed Studs and Deformed Bar Anchors:

1. Headed studs:

a. ASTM A108, complying with AWS D1.1/D1.1M, Section 7, Type B; minimum yield strength 50,000 psi, minimum tensile strength 60,000 psi.

b. Uniform diameter.

c. Heads: Concentric and normal to shaft.

d. Weld end: Chamfered and solid flux.

2. Deformed bar anchor:

a. ASTM A1064/A1064M, complying with AWS D1.1/D1.1M, Section 7, Type C.

b. Minimum yield strength: 70,000 psi.

c. Minimum tensile strength: 80,000 psi.

d. Straight, unless indicated otherwise.

e. Solid flux.

3. After welding, remove ceramic ferrules and maintain free from any substance which would interfere with function, or prevent bonding to concrete.

K. Crane Rails:

1. Controlled-cooled, open-hearth carbon steel ASCE (American Society of Civil Engineers) rails per ASTM A2, Class A, #1 rails, unless noted otherwise, of size and weight indicated.

a. Furnish rails with milled tight end joints suitable for crane service, with standard drilling, removable end stops and all related accessories required, including:

1) Joint bars: Match rail section and properties, drilled to match rail drilling.

2) Joint bar bolts and nuts: High strength.

3) Hardened washer: ASTM F436 for bar bolts.

4) Except as indicated otherwise, two-bolt type fixed or floating rail clamps to suit the conditions, of forged or pressed steel, complete with Grade A325 bolts, reversible fillers, and self-locking nut or nut and lock washer.

L. Mechanical and Adhesive Anchor Bolts for Fastening to Concrete:

1. See Specification Section 03 15 19, "Cast-In Concrete Anchors."

2.3 FABRICATION

A. Comply with requirements of applicable Building Code and AISC 360 with modifications and additional requirements specified herein.

1. Identify high-strength steel material in fabricated members in accordance with ASTM A6/A6M.

B. Minimize the amount of field welding.

1. Shop assembles components into largest size possible commensurate with transportation and handling limitations.

2. Shop connections: Bolted with high-strength bolts or welded.

C. Connection Details:
   1. Provide as a minimum, two 3/4-inch-diameter, high-strength bolts for all bolted connections unless otherwise specified.
D. Provide bearing type connections for all bolted connections, unless otherwise noted.
E. Field Connections:
   1. Provide bolts for all field connections except where shown otherwise on the Drawings.
   2. Use high-strength bolts unless shown or specified otherwise.
   3. Use of high-strength bolts: Conform to RCSC Specification for Structural Joints Using High-Strength Bolts.
   4. Unfinished bolts may be used for attaching stair treads to stringers.
   5. If structural steel details (field welds versus shop welds, etc.) shown on design Drawings are not compatible with selected erection procedures, submit proposed modifications for review.
   6. Connections to structural steel provided by others: Provide all connectors and coordinate location of bolt holes to match connection holes in steel provided by others.
F. Accurately mill column end bearing surfaces to true plane.
G. Fabricate and erect beams with non-specified camber in accordance with AISC 360, Chapter L1.
H. Cut, drill, or punch holes at right angles to surface of metal.
   1. Do not make or enlarge holes by burning.
   2. Make holes clean cut, without torn or ragged edges.
   3. Remove outside burrs resulting from drilling or reaming operations with tool-making 1/16-inch bevel.
   4. Provide holes in members to permit connection of Work of other trades or contractors.
I. Make allowance for draw in all cross bracing to provide small amount of initial tension in members.
J. Make splices only where indicated or where approved.
K. Wall Girts:
   1. Extend past columns and miter ends unless noted otherwise.
   2. Connect girts to each other at corners unless noted otherwise.
L. Cope at 45 degrees, corners of stiffener plates at junction of member flanges with webs.
M. Flame cut bevels for welds, provided such cutting is done automatically.
   1. Leave free of burrs and slag by grinding or planning the cut edges.
N. Grind smooth all rough welds and sharp steel edges shall be ground to approximately ⅛-inch radius.
O. Tolerances unless noted otherwise on Drawings:
   1. When material received from the mill does not satisfy ASTM A6/A6M tolerances for camber, profile, flatness or sweep, the Contractor is permitted to perform corrective Work by the use of controlled heating, and mechanical straightening, subject to the limitations of the AISC 360.
   2. Fabrication tolerance:
      a. Member length:
         1) Both ends finished for contact bearing: 1/32 inch.
         2) Framing members: 30 feet or less: 1/16 inch; Over 30 feet: 1/8 inch.
      b. Member straightness:
         1) Compression members: 1/1,000 of axial length between points laterally supported.
         2) Non-compression members: ASTM A6/A6M tolerance for wide flange shapes.
      c. Specified member camber (except compression members):
         1) 50 feet or less: -0/+1/2 inch.
         2) Over 50 feet: -0/+1/2 inch (+1/8 inch per 10 feet over 50 feet).
         3) Members received from mill with 75 percent of specified camber require no further cambering.
         4) Fabricate beams/trusses without specified camber so after erection, camber is upward.
         5) Measure camber in fabrication shop in unstressed condition.
      d. Use filler plates at bolted splices to take up depth deviation.
         1) At welded joints, adjust weld profile to conform to variation in depth.
         2) Slope weld surface per AWS requirements.
      e. Free finished members from twists, bends and open joints.

1) Sharp kinks, bends, and deviation from the above tolerances are cause for rejection of material.

2.4 WELDING

A. Comply with AWS D1.1/D1.1M and D1.6/D1.6M, and other requirements indicated herein, for all welding, techniques of welding employed, appearance and quality of welds, and methods used to correct defective Work.
   1. Qualify joint welding procedures or test in accordance with AWS qualification procedures.

B. Test and qualify welders, welding operators and tackers in compliance with AWS D1.1/D1.1M for position and type of welding to which they shall be assigned.
   1. Conduct tests in presence of approved testing agency.
   2. Certification within previous 12 months shall be acceptable, provided samples of the welder's Work are satisfactory.

C. Before Starting Welding:
   1. Carefully plumb and align members in compliance with specified requirements.
   2. Fully tighten all bolts.
   3. Comply with AWS D1.1/D1.1M and D1.6/D1.6M, Section 5 for assembly and surface preparation.
   4. Preheat base metal to temperature stated in AWS D1.1/D1.1M and D1.6/D1.6M.
      a. When no preheat temperature is given in AWS D1.1/D1.1M and D1.6/D1.6M and base metal is below 50° F, preheat base metal to at least 70° F.
      b. Maintain temperature during welding.
      c. Preheat surface of all base metal within distance from point of welding equal to thickness of thicker part being welded or 3 inches, whichever is greater, to specified preheat temperature.
      d. Maintain this temperature during welding.
   5. Mark welds with an identifying mark unique to each welder.

D. Make flange welds before making web welds.

E. Where groove welds have back-up plates, make first three passes with ⅛-inch round electrodes.
   1. Use backup plates in accordance with AWS D1.1/D1.1M and D1.6/D1.6M, extending minimum of 1 inch either side of joint.

F. Flame cut edges of stiffener plates at shop or field butt weld.
   1. Do not shear.

G. Grind flush web fillets at webs notched to receive backup plates for flange groove welds.

H. Low Hydrogen Electrodes: Dry and store electrodes in compliance with AWS D1.1/D1.1M.

I. Do not perform welding when ambient temperature is lower than 0° F or where surfaces are wet or exposed to rain, snow, or high wind, or when welders are exposed to inclement conditions.

J. Headed Studs and Deformed Bar Anchors:
   1. Automatically end welded in accordance with the AWS D1.1/D1.1M and manufacturer's recommendations.
   2. Fillet welding of headed studs and deformed bar anchors is not allowed unless approved by the Engineer.

K. Test in-place studs in accordance with requirements of AWS D1.1/D1.1M to ensure satisfactory welding of studs to members.
   1. Replace studs failing this test.

L. When headed stud-type shear connectors are to be applied, clean top surface of members to receive studs in shop to remove oil, scale, rust, dirt, and other materials injurious to satisfactory welding.
   1. Do not shop paint or galvanize metal surfaces to receive field-applied studs.

2.5 SHOP COATING

A. Refer to Specification Section 09 96 00, "High-Performance Coatings" and coordinate shop primer, surface preparation and coating with field applied primers and coatings where specified.

B. Provide suitable methods of handling and transporting painted steel to avoid damage to coating.

C. Do not coat following surfaces:
   1. Machined surfaces, surfaces adjacent to field welds, and surfaces fully embedded in concrete.

2. All other members for which no coating is specified.
3. Contact surfaces at bolted slip-critical connections, unless surface condition conforms to the RCSC Specification for Structural Joints Using High-Strength Bolts, Part 3.2.2.

D. Clean thoroughly all surfaces not coated before shipping.
1. Remove loose mill scale, rust, dirt, oil, and grease.
2. Protect machined surfaces.

2.6 SOURCE QUALITY CONTROL

A. Special Inspection and Testing:
1. If the fabricator is not an Approved Fabricator, the City shall employ the services of an independent testing agency to inspect and test structural steel shop Work for compliance with Specifications.
a. The Contractor shall provide sufficient notification and access so inspection and testing can be accomplished.
2. The Contractor is responsible for testing to qualify shop welders and as needed for the Contractor's own quality control to ensure compliance with Contract Documents.

B. Approved Fabricator or Testing Agency Responsibilities:
1. Inspect shop and field welding in accordance with AWS D1.1/D1.1M, Section 6 including the following non-destructive testing:
a. Visually inspect all welds.
b. In addition to visual inspection, test 50% of full penetration welds and 20% of fillet welds with liquid dye penetrant.
c. Test 20 percent of liquid dye penetrant tested full penetration welds with ultrasonic or radiographic testing.
2. Inspect high-strength bolting in accordance with the RCSC Specification for Structural Joints Using High-Strength Bolts, Section 9.
a. Verify proper pretension for slip-critical bolted connection only.
b. Verify direct tension indicator gaps for slip-critical bolted connection only.
3. Inspect stud welding in accordance with AWS D1.1/D1.1M, Section 7.8.
4. Prepare and submit inspection and test reports to the Engineer.

2.7 GENERAL

A. The Contractor is solely responsible for safety.
1. Construction means and methods and sequencing of Work is the prerogative of the Contractor.
2. Consider that full structural capacity of many structural members is not realized until structural assembly is complete, e.g., until slabs, decks, bracing, or rigid connections are installed.
3. Partially complete structural members shall not be loaded without an investigation by the Contractor.
4. Until all elements of the permanent structure and lateral bracing system are complete, provide temporary bracing designed, furnished, and installed by the Contractor for the partially complete structure.

B. Adequate temporary bracing to provide safety, stability and to resist all loads to which the partially complete structure may be subjected, including wind, construction activities, and operation of equipment, is the responsibility of the Contractor.
1. Use temporary guys, braces, shoring, connections, etc., necessary to maintain the structural framing plumb and in proper alignment until permanent connections are made, the succeeding Work is in place, and temporary Work is no longer necessary.
2. Use temporary guys, bracing, shoring, and other Work to prevent injury or damage to adjacent work or construction from stresses due to erection procedures and operation of erection equipment, construction loads, and wind.
3. Design of the temporary bracing system and consideration of the sequence and schedule of placement of such elements and effects of loads imposed on the structural steel members by partially or completely installed Work, including Work of all other trades, is the Contractor's responsibility.

a. If not obvious from experience or from the Drawings, confer with the Engineer to identify those structural steel elements that must be complete before the temporary bracing system is removed.

4. Remove and dispose of all temporary Work and facilities off Site.

C. Examine Work-in-place on which specified Work is in any way dependent to ensure that conditions are satisfactory for the installation of the Work.

1. Report defects in Work-in-place which may influence satisfactory completion of the Work.
2. Absence of such notification shall be construed as acceptance of Work-in-place.

D. Field Measurement:

1. Take field measurements as necessary to verify or supplement dimensions indicated on the Drawings.
2. The Contractor is responsible for the accurate fit of the Work.

E. Check the elevations of all finished footings or foundations and the location and alignment of all anchor bolts before starting erection.

1. Notify the Engineer of any errors or deviations found by such checking.

PART 3 EXECUTION

3.1 ERECTION

A. Framing member location tolerances after erection shall not exceed the framing tolerances listed in the Article “Field Quality Control” of this Specification Section.

B. Erect plumb and level; introduce temporary bracing required to support erection loads.

C. Use light drifting necessary to draw holes together.

1. Drifting to match unfair holes is not allowed.

D. Welding:

1. Conform to AWS D1.1/D1/1M and D1.6/D1.6M and requirements of this Specification Section.
2. Join two sections of steel of different ASTM designations using welding techniques in accordance with a qualified AWS D1.1/D1.1M and D1.6/D1.6M procedure.

E. Shore existing members when unbolting of common connections is required.

1. Use new bolts for rebolting connections.

F. Clean stored material of all foreign matter accumulated during erection period.

G. Clean bearing and contact surfaces before assembly.

H. Set beam and column base and bearing plates accurately, as indicated, on non-shrink grout.

1. Set and anchor each base plate to proper line and elevation.
2. Use metal wedges, shims or setting nuts as required and tighten anchor bolts.
   a. Use same metal as base plate.
   b. Cut off protrusions of wedges and shims flush with edge of base plate.
3. Fill sleeves around anchor bolts with non-shrink grout.
4. Pack grout solidly between bottom of plate and bearing surface.

I. Cast-in-place Anchor Bolts:

1. See Specification Section 03 15 19, “Cast-In Concrete Anchors.”

J. Install high strength bolts with hardened washers.

1. Install and tighten in accordance with the RCSC Specification for Structural Joints Using High-Strength Bolts, Section 8.
2. Coordinate installation with inspection.
   a. Do not start installation until coordination with City Inspector is complete.
3. Bearing-type connections: High-strength bolts shall be tightened to snug-tight condition.
4. Slip-critical connections:
   a. Perform calibration testing for all methods of installation of high-strength bolts in accordance with RCSC Specification for Structural Joints Using High-Strength Bolts, Section 8.2.
   b. Turn-of-nut tightening:
      1) City Inspector shall observe the pre-installation verification testing.

2) Subsequently, ensure by routine observation that the bolting crew properly rotates the turned element relative to the unturned element by the amount specified.
3) Alternatively, when fastener assemblies are match-marked after the initial fitup of the joint but prior to pretensioning, visual inspection after pretensioning is permitted in lieu of routine observation.

c. Calibrated wrench tightening: Calibrate on a daily basis.
d. Direct tension indicator tightening: If previously approved by the Engineer.
e. Installation of alternate design bolts: If previously approved by the Engineer.

5. In the event any bolt in a connection is found to be defective, check and retighten all bolts in the connection.

K. Do not use gas cutting to correct fabrication errors.
1. In case members do not fit or holes do not match, ream out the holes and insert the next larger size bolt.
a. Drill new holes if the connections require new holes.
b. Make no such corrections without prior approval of the Engineer.
2. Burning of holes is not permitted.

L. Prior to making field connections to existing structural steel, remove completely all paint from existing steel which will be in contact with new steel and new welds.

M. Tighten and leave in place erection bolts used in welded construction.

N. Provide beveled washers to give full bearing to bolt head or nut where bolts are to be used on surfaces having slopes greater than 1 in 20 with a plane normal to bolt axis.

O. After bolts are tightened, upset threads of non-high strength bolts and anchor bolts to prevent nuts from backing off.

P. After Erection:
1. Grind smooth all sharp surface irregularities resulting from field cutting or welding.
2. Power tool clean welds, bolts, washers, and abrasions to shop coat removing all rust and foreign matter.

Q. Mechanical Anchor Bolts and Adhesive Anchor Bolts:
1. See Specification Section 03 15 19, “Cast-In Concrete Anchors.”

3.2 FIELD QUALITY CONTROL

A. Special Inspection and Testing:
1. Special Inspection to be in accordance with the Building Code. City shall provide and absorb the costs associated with the following Special Inspection services.
2. Special Inspection is required for:
a. Material verification of high-strength bolts, nuts, and washers.
1) Frequency: All high-strength bolts, prior to being covered up or substantial completion.
b. Inspection of high strength bolts:
1) Frequency:
(a) All high-strength bolts, prior to being covered up or substantial completion.
(b) Pretensioned and slip-critical joints using turn-of-nut without match marking or calibrated wrench methods of installation require continuous inspection.
c. Material verification of structural steel.
1) Frequency: Prior to being covered up or Substantial Completion.
d. Material verification of weld filler materials.
1) Frequency:
(a) Prior to welding on Site.
(b) Randomly thereafter.
e. Inspection of welding.
1) Frequency:
(a) Visually inspect all welds.
(b) In addition to visual inspection, test 50% of full penetration welds and 20 percent of fillet welds with liquid dye penetrant.
(c) 20 percent of full penetration welds tested with liquid dye penetrant shall be tested with ultrasonic or radiographic testing.

f. Inspect structural steel which has been erected.
   1) Frequency: Prior to members being covered up or Substantial Completion.
g. Inspect stud welding in accordance with AWS D1.1/D1.1M, Section 7.8.

B. Erected framing tolerance, unless noted otherwise on the Drawings:
   1. Do not exceed cumulative effect of rolling, fabrication, and erection tolerance for overall finished dimensions.
   2. Erection tolerances are defined relative to member working points and working lines as follows:
      a. Actual centerline of top flange or surface at each end for horizontal members.
      b. Actual center of member at each end for all other members.
      c. Other points may be used, providing they are based on these definitions.
      d. Working line is straight line connecting member working points.
   3. Tolerances on position and alignment are as specified in the Code, unless otherwise modified.
      a. Provide “adjustable items” such as lintels, wall supports, curb angles, window mullions and similar members with adjustable connections to supporting structural framing.
   4. Certification by steel erector:
      a. Certify the location of erected structural steel is acceptable for plumbness, level, and aligned within tolerances specified.
      b. Provide certification upon completion of any part of Work.
      c. Provide certification prior to start of Work by other trades that may be supported; attach to structural steel Work.

3.3 CLEANING AND REPAIR OF SHOP PRIMER PAINT

A. After erection, clean all steel of mud or other foreign materials, and repair any damage.
   1. Touchup coatings to comply with Specification Section 09 96 00, “High-Performance Coatings.”

B. Structural steel fabrication, erection of supports, braces and connections and detailing as specified herein shall be included in the measurement and payment for “Pump Station” as described in Section 03 30 00.

C. No separate measurement and payment will be made for any other work covered by this Section. The cost of any other work shall be considered incidental.

END OF SECTION

SECTION 053000 - METAL DECKING

PART 1 GENERAL

1.1 SUMMARY

A. This Section includes:
1. Manufactured roof decking.
2. Manufactured metal decking.

1.2 REFERENCES

A. The following publications form a part of this Specification to the extent referenced. The publications are referred to in the text by the basic designation only. The latest edition of the applicable publication in effect on the date the Project is advertised shall be used.
1. American Iron and Steel Institute (AISI):
a. S100, Specification for the Design of Cold-Formed Steel Structural Members.
2. American Welding Society (AWS):
a. D1.1/D1.1M, Structural Welding Code – Steel.
b. D1.3/D1.3M, Structural Welding Code – Sheet Steel.
3. ASTM International (ASTM):
a. A36/A36M, Standard Specification for Carbon Structural Steel.
b. A653/A653M, Standard Specification for Steel Sheet, Zinc-Coated (Galvanized) or Zinc-Iron Alloy-Coated (Galvannealed) by the Hot-Dip Process.
c. A780/A780M, Standard Practice for Repair of Damaged and Uncoated Areas of Hot-Dip Galvanized Coatings.
d. A1008/A1008M, Standard Specification for Steel, Sheet, Cold-Rolled, Carbon, Structural, High-Strength Low-Alloy, High-Strength Low-Alloy with Improved Formability, Solution Hardened, and Bake Hardenable.
e. C1513, Standard Specification for Steel Tapping Screws for Cold Formed Steel Framing Connections.
f. D746, Standard Test Method for Brittleness Temperature of Plastics and Elastomers by Impact.
g. D1056, Standard Specification for Flexible Cellular Materials-Sponge or Expanded Rubber.
4. Steel Deck Institute (SDI):
a. 31, Design Manual for Composite Decks, Form Decks and Roof Decks.
5. Underwriters Laboratories, Inc. (UL):
a. UL Fire Resistance Directory.

1.3 QUALITY ASSURANCE

A. Qualifications:
1. Decking Manufacturer:
a. Manufacturer shall possess current, valid, full membership in SDI; associate membership is unacceptable. Submit to the Engineer documentation of such membership.
2. Welders:
a. Qualify welding processes, operations, and personnel in accordance with AWS D1.1 and AWS D1.3, for decking manufacturing and welding at the Site.
b. Welders shall be qualified, as indicated in the paragraph immediately above, during the 12-month period preceding commencement of welding for the Work and be experienced in welding light-gauge metal.
c. Promptly submit documentation of qualifications when requested by the Engineer.

1.4 SUBMITTALS

A. Shop Drawings:

1. Complete framing and erection plans and details.
2. Location, length, type, cross section, thickness, and markings of metal decking units.
3. Size and location of each opening in decking and conditions requiring closure panels and supplementary framing. Show and indicate necessary accessories and reinforcing.
4. Sequence and procedure to be followed for erecting, fastening, and securing decking. Engineer approval or commenting on shop drawings does not in any way reduce or mitigate the Contractor's responsibility for means, methods, procedures, techniques, and sequences of construction or for safety and protection measures incident thereto.
5. Show and indicate units and surfaces to receive shop-applied finishing, as applicable.
6. Location of required shoring for metal decking. Engineer's approval or comments on shop drawings showing or indicating such information in no way reduces or modifies the Contractor's obligations for construction means, methods, sequences, procedures, and techniques and safety and protection measures incident thereto.
7. Details and gauges of accessories and miscellaneous items, showing sump pans, cant strips, ridge and valley plates, closure and filler strips and insulation supports.
8. Fasteners and welding details for installation, including size, spacing, type, and location of fasteners necessary and required to secure decking.
9. Recommended welding rod size, type, burn-off rate, and welder setting for deck thickness to be joined. Engineer approval or comments on Shop Drawings showing or indicating such information in no way reduces or modifies the Contractor's obligations for construction means, methods, sequences, procedures, and techniques and safety and protection measures incident thereto.
10. Define welds by indicating standard AWS welding symbols.
11. Shop Drawings shall not be developed from or reproductions of the Drawings.

B. Product Data:
1. Manufacturer's specifications and published catalog data for:
   a. Welds and welding procedure.
   b. Galvanizing repair paint.
   c. Screws.
   d. Powder actuated fasteners.
   e. Joint sealing compound.
2. Manufacturer's load tables for decking to be provided, including:
   a. Allowable gravity load for metal roof decking.
   b. Allowable diaphragm shear values for metal roof deck.
   c. Allowable metal decking superimposed load.
   d. Allowable un-shored span lengths for metal decking.

C. Informational Submittals:
1. Certifications:
   a. Manufacturer's certification that metal decking provided complies with specified requirements, including:
      1) Deck material, manufacturing, and shop testing and inspection are in accordance with SDI requirements.
2. Supplier's Instructions:
   a. Manufacturer's written instructions for storing, handling, and installing materials furnished.
3. Test and Evaluation Reports:
   a. Powder driven fastener ICC-ES Evaluation Report(s).
4. Source Quality Control Submittals:
   a. Manufacturer's certified test and mill reports for actual materials furnished.
5. Qualifications Statements:
   a. Evidence of manufacturer's current, valid SDI membership.
   b. Welder qualifications and certifications, when requested by the Engineer.

1.5 DELIVERY, STORAGE, AND HANDLING

A. Delivery and Handling:

1. Comply with the Contract Documents, SDI requirements and recommendations, and decking manufacturer's written instructions.

B. Storage:

1. Comply with the Contract Documents, SDI requirements and recommendations, and decking manufacturer's written instructions.
2. Store metal decking off the ground, entirely covered by waterproof covering, with one end elevated for drainage. Properly vent waterproof covering to avoid condensation.
3. Prevent corrosion, deterioration, and accumulation of foreign matter.
4. Prevent formation of "white rust" on surfaces with galvanized finish.
5. Do not overload supporting members.

PART 2 PRODUCTS

2.1 MANUFACTURERS

A. Subject to compliance with the Contract Documents, the following manufacturers are acceptable, or approved equal:

1. 3-inch deep metal roof decking:
   a. Vulcraft.
   b. Verco Decking.
   c. New Millennium Building Systems.
   d. DACS.
2. 1.5-inch-deep composite floor decking:
   a. Vulcraft, Type 1.5 VL.
   b. Verco Decking, Inc., PLB FORMLOK.
   c. New Millennium Building Systems, 1.5 CD.
   d. DACS, 1.5-inch Composite Deck.
3. 3-inch-deep composite floor decking:
   a. Vulcraft, Type 3 VL.
   b. Verco Decking, PLW3.
   c. New Millennium Building Systems, 3.0 CD.
   d. DACS, 3-inch Composite Deck.
4. 3-inch deep form (non-composite) floor decking:
   a. Vulcraft Type 1.5C and 3C.
   b. New Millennium Building Systems.
   c. DACS.

2.2 METAL ROOF DECKING

A. Design of the metal decking shall be checked by decking manufacturer's professional engineer and found by such professional engineer to comply with SDI's standard specifications and load tables.

1. Allowable superimposed live uniform loading per square foot for metal roof decking provided for spans shown or indicated shall equal or exceed allowable superimposed live uniform load per square foot for same spans as indicated in SDI's tables.
2. Maximum Deflection: Less than 1/240 of span under live load.

B. Provide decking configurations complying with SDI 31 and as shown and indicated.

1. Painted Decking: ASTM A1008, shop-applied.
2. Galvanized Decking: ASTM A653 G60 zinc coating.

C. Metal Roof Decking, 1-1/2-inch Deep:

1. Rib type B (wide rib), sheet steel, 18-gauge, minimum, galvanized
2. Wide Rib Deck: Ribs spaced approximately 6 inches on centers; width of rib opening at top surface maximum 2.5 inches; width of bottom rib surface minimum 1.75 inches.

D. Metal Roof Decking, 3-inch Deep:

1. Rib type N (deep rib), sheet steel, 18-gauge, minimum, galvanized

2. Deep Rib Decking: Depth 3 inches, ribs spaced approximately 8 inches on centers; width of rib opening at top surface maximum 2-5/8 inches; width of bottom rib surface minimum 1.5 inches.

2.3 COMPOSITE FLOOR DECKING

A. Composite Floor Decking:
   1. Rib type N (deep rib), h18-gauge (minimum), 3-inch-deep nominal.
   2. Ribs with interlocking laps, unless otherwise specified. Minimum Superimposed Load Capacity:
      a. 20 pounds per square foot (PSF).
      b. Design in accordance with SDI 31.
   3. Fabricate decking from steel complying with AISI S100, Section A3.
   4. Finish: Galvanized coating in accordance with ASTM A653 G90 zinc coating.
   5. Metal Closures and Pour-Stops:
      a. Manufacturer's standard, 20-gauge minimum.
      b. Finish: Galvanizing complying with ASTM A653 G90.
      c. Form to configuration required for mortar-tight closures.

B. Provide composite decking as bottom form for cast-in-place concrete slabs and which shall become positive slab reinforcing through mechanical anchorage after concrete hardens.
   1. Provide decking units with fire rated assemblies that shall conform to UL Fire Resistance directory.

C. Maximum Deflection:
   1. Deck as a form: Less than 1/180 of span or 3/4 inch, whichever is less, under weight of wet concrete, steel decking, and construction live load allowance.
   2. Composite slab with deck: Less than 1/360 under superimposed loads.

2.4 FABRICATION

A. Standard Deck Profiles:

DEPTH	TYPE (Vulcraft designations, UNO)	RIB SPACING	TOP SURFACE MAXIMUM RIB OPENING	MINIMUM BOTTOM OF RIB WIDTH
1½ inches	Roof Deck Narrow Rib ('1.5A')*	6 inches	1 inch	⅜ inch
1½ inches	Roof Deck Intermediate Rib ('1.5F')*	6 inches	1¾ inches	½ inch
1½ inches	Roof Deck - Wide Rib ('1.5BI')	6 inches	2⅝ inches	1⅝ inches
3 inches	Roof Deck ('3NI')	8 inches	4⅜ inches	2-1/16 inches
1½ inches	Form Deck ('1.5C')	6 inches	4⅜ inches	2⅝ inches (max)
1½ inches	Composite Floor Deck ('1.5VL')	6 inches	2⅝ inches	1⅝ inches
2 inches	Composite Floor Deck ('2VL1')	12 inches	7 inches	5 inches
3 inches	Composite Floor Deck ('3VL1')	12 inches	7¼ inches	4¾ inches

   1. * Indicates produced by DACS

B. Minimum Deck Thickness:
   1. Where gauge of metal is indicated, provide the not less than uncoated thickness required by SDI.
      a. Delivered thickness of uncoated steel: Not less than 95 percent of the stated thickness.
   2. Use steel with minimum yield stress of 33 ksi.
   3. Comply with deflection limits, especially when proposing steel with greater strength than required in this provision.

C. Fabrication:

1. Fabricate decking units in lengths to span three or more support spacings with flush, telescoped or nested end laps not less than 2 inches.
    a. End laps shall occur on supporting members.
    b. Provide decking units with interlocking male and female type side laps or joints to provide positive vertical and lateral alignment of adjacent decking units.

2.5 ACCESSORIES

A. Metal Closures:
    1. Form to configuration required for tight-fitting closures at open ends and sides of decking.
    2. Minimum thickness before galvanizing: 0.0358 inch (20-gauge).
B. Ridge and Valley Plates:
    1. Minimum Width: 4.5 inches.
    2. Bend to provide tight-fitting closure with deck units.
    3. Provide plates in 10-foot length where possible.
    4. Minimum thickness before galvanizing: 0.0358 inch (20-gauge).
C. Welding Washers:
    1. 16-gauge bent steel plate with 3/8-inch or as required by weld size center hole.
    2. Provide at all deck units thinner than 22-gauge.
D. Filler Sheet:
    1. Flat or formed 20-gauge galvanized steel.
E. Roof Sump Pans:
    1. Provide roof sump pans at locations shown.
    2. Fabricate each from single piece of galvanized sheet steel with level bottom and sloping sides to direct water flow to drain.
    3. Provide sump pans of adequate size to receive roof drains with bearing flanges not less than three inches wide.
    4. Recess pans not less than 1.5 inches below roof deck surface, unless otherwise shown or indicated or required by deck configuration.
    5. Minimum thickness before galvanizing: 0.0747 inch (14-gauge).
F. Cant Strips:
    1. Provide bend cant strips to form 45-degree slope not less than 5 inches wide, with top and bottom flanges not less than 3 inches wide.
    2. Minimum thickness before galvanizing: 0.0358 inch (20-gauge).
G. Insulation Supports:
    1. Provide insulation supports that do not impair quality or finish of decking.
H. Venting:
    1. Provide slotted openings in bottom flutes in accordance with manufacturer’s standards.
I. Metal Pour Stops:
    1. Provide and form to configuration required for mortar-tight closures at open sides and ends of decking.
J. Primer Paint:
    1. Unless otherwise required in the Contract Documents, provide decking manufacturer’s baked-on, rust-inhibitive paint, factory-applied to chemically cleaned and phosphate treated metal surfaces.
    2. Paint is not required for galvanized surfaces, unless otherwise indicated.
K. Galvanized coating for metal decking accessories: Comply with ASTM A653 (or equivalent) G90 zinc coating.
L. Galvanizing Repair Materials:
    1. Galvanized repair paint shall be in accordance with Section 03 15 19, “Cast-In Concrete Anchors.”
M. Screws:
    1. Self-drilling, self-tapping, no. 12 size minimum, hex washer head metal screws.
    2. Protected carbon steel, Hilti S-MD KF, or equal.
        a. Kwik-Cote finish.
        b. ASTM C1513.

N. Miscellaneous Steel Shapes:
   1. Comply with ASTM A36.
O. Sheet Metal Accessories:
   1. Provide of same material and finish as decking panels.
P. Flexible Closure Strips for Decking:
   1. Vulcanized, closed cell expanded chloroprene elastomer, complying with ASTM D1056, Grade SCE 41.
   2. Brittleness Temperature: -40° F, ASTM D746.
   3. Flammability Resistance: Self-extinguishing.
   4. Provide with adhesive in accordance with manufacturer's written instructions.
   5. Ensure complete closure in the Work.

2.6 SOURCE QUALITY CONTROL

A. Tests and Inspections:
   1. Before shipping materials from the shop or fabrication facility to the Site or off-site storage, perform manufacturer's or fabricator's ordinary inspections, testing, and other source quality control activities.
   2. Do not ship materials that are damaged or otherwise defective.

PART 3 EXECUTION

3.1 PREPARATION

A. Examination:
   1. Examine areas and conditions under which metal decking shall be installed for conditions detrimental to proper and timely completion of the Work.
   2. Do not proceed with the Work until unsatisfactory conditions are remedied.
B. Do not start installing metal decking until supporting Work is in place and properly secured.

3.2 INSTALLATION

A. Installation – General:
   1. Install decking in accordance with the Contract Documents, SDI requirements and recommendations, decking manufacturer's written instructions and approved submittals. In event of conflict among such requirements, obtain the Engineer's written interpretation or clarification before proceeding with the associated Work.
   2. Loading During Handling and Installation:
      a. Do not overload supporting structural members or architectural elements.
      b. Until entire assembly is substantially complete, structural elements may be unstable or incapable of supporting loads required by code or design loads indicated in the Contract Documents.
      c. Locate deck bundles to prevent overloading of structure.
      d. Ensure decking construction loads are less than recommendation of SDI 31, except where adequate temporary supports are provided.
   3. Provide the decking manufacturer's standard accessories as needed to complete decking Work installation.
   4. Install each decking unit on supporting structural frame, adjust to final position and accurately align with ends properly bearing on supporting members.
   5. Interlock decking units at sides without stretching, contracting, or deforming.
   6. Install deck units flat and square and secure to framing without warp or excessive deflection.
   7. Install decking units in accurate and close alignment for entire length of run and with close alignment of flutes of one unit with those of abutting unit.
   8. Refer to requirements, below in this Article, applicable to all decking, including:
      a. Cutting, fitting, and openings.

b. Temporary supports.
c. Welding – general.
d. Fastening (mechanical and welding).
e. Pour stops for concrete.
f. Accessories.

B. Roof Decking:
1. Install roof composite decking units and accessories as required, in accordance with SDI 31.
2. Lap roof deck units at ends not less than 2 inches.
3. Refer to requirements, below in this Article, for roof decking provisions on:
a. Insulation supports.
b. End closures.
c. Ridge and valley plates.
d. Roof sump pans.
e. Cant strips.
f. Others.

C. Temporary Supports (Shoring) for Composite and Form Decking:
1. Provide temporary supports for composite and form decking for span conditions and lengths where required by SDI 31.
2. Shoring shall support decking for the greater of: (a) construction loads listed in SDI 31, or (b) for actual loads applied during construction.
3. Indicate temporary supports on shop drawings. The Contractor has full responsibility for adequacy, design, and quality of temporary supports and safety and protection measures incident thereto. Engineer's approval of shop drawings showing or indicating temporary supports shall, in no way, impose on the Engineer any obligation to review or accept any responsibility for construction means, methods, techniques, procedures, or sequences or any associated measures for safety and protection, which are solely the Contractor's under this Contract.
4. Provide temporary supports to avoid overstress supporting construction.
5. Do not remove temporary supports until deck concrete is not less than 75 percent of its required compressive strength.

D. Cutting, Fitting, and Openings:
1. Cut and fit deck units and accessories around other construction projecting through or adjacent to decking.
2. Comply with Section 01 73 29, "Cutting and Patching."
3. Make cutting and fitting neat, square, and trim.
4. Cut decking by mechanical means, not by burning.
5. Neatly and accurately install reinforcing at openings, except:
a. Circular openings less than 6-inch diameter.
b. Rectangular openings having no side dimension greater than 6 inches.
6. Reinforcing at Openings:
a. Reinforce openings that are not framed between 6 inches and 1 foot with 20-gauge flat steel sheet, 1-foot greater in each dimension than opening.
b. Provide sheeting around opening. Fusion-weld to top surface of deck at each corner and midway along each side.

E. Field Welding – General:
1. Plug weld sizes indicated are effective fusion diameter of welds.
2. Weld metal shall penetrate all layers of deck material and have good fusion to supporting members.
3. Do not burn through deck.

F. Fastening (Mechanical and Welded):
1. Prevent over-torquing of screw fasteners by using a tool with depth-limiting nosepiece and clutch.
2. Fastening of 1.5-inch Deep Metal Roof Deck:
a. Unless otherwise shown or indicated, secure decking units to supporting frame and side laps as follows:
1) Fasten edge ribs of panels at each support.

2) At interior supports and at ends of deck, use:
   (a) For 2-foot-wide deck: Three 5/8-inch round plug welds per deck unit.
   (b) For 2.5-foot and 3-foot-wide deck: Four 5/8-inch round plug welds per deck unit.
   (c) Install 20-gauge and thinner deck with welding washers at all specified weld locations.
3) At perimeter supports, provide 5/8-inch round plug welds at 1-foot on centers.
   (a) At side laps, provide 5/8-inch round puddle weld or 3/8 by 1.5-inch arc seam weld at 1.5 feet on centers.

3. Fastening of 3-inch Deep Metal Roof Deck:
   a. Unless otherwise shown or indicated, secure decking units to supporting frame and side laps as follows:
      1) Fasten edge ribs of panels at each support.
      2) At interior supports and at ends of deck provide:
         (a) Four 5/8-inch round plug welds per decking unit (2-foot unit).
         (b) Install 20-gauge and thinner deck with welding washers at specified weld locations.
      3) At perimeter supports 5/8-inch round plug welds at 1-foot on centers.
      4) At side laps, provide 5/8-inch round puddle weld or 3/8 by 1.5-inch arc seam weld at 2 feet on centers.
4. Fastening of Composite and Form Decking:
   a. Secure decking units to supporting frame and side laps as follows:
      1) Fasten edge ribs of panels at each support.
      2) At each end of each decking unit and at intermediate supports: ⅝-inch puddle welds at 1-foot on centers with no fewer than 2 welds per support. Install 20 GA and thinner deck with welding washers at all specified weld locations.
      3) At perimeter parallel to deck: 5/8-inch puddle welds or 3/8 by 1.25-inch seam welds at 1.5 feet on centers.
      4) At side laps: Provide puddle welds spaced not more than 2 feet on centers.
      5) At sheet metal closures used at ends or sides: Self-drilling sheet metal screws or tack welds at maximum 2 feet on centers.

G. Insulation Supports:
   1. Provide insulation supports as necessary and required.
   2. Provide insulation supports where top surface of roof decking does not extend as necessary and required to completely support roof insulation.
   3. Weld insulation supports into position.

H. Closure Strips:
   1. Provide metal closure strips at open, uncovered ends and edges of roof decking, and in voids between deck and other construction.
   2. Weld closure strips into position to provide complete decking.
   3. Flexible Closure Strips:
      a. Provide flexible closure strips lieu of metal closures, at the Contractor’s option and when approved by the Engineer, wherever use shall ensure complete closure.
      b. Provide with elastomeric type adhesive in accordance with written directions and recommendations of manufacturers of closure strips and adhesives.

I. Ridge and Valley Plates:
   1. Provide weld ridge and valley plates at top surface of roof decking.
   2. Lap end joints not less than 3 inches with laps in direction of water flow.

J. Roof Sump Pans:
   1. Provide over openings in roof decking.
   2. Weld to top deck surface. Space welds at not more than 1 foot on center with not less than one weld at each corner and each side midway between each corner.
   3. Cut opening in bottom of roof sump to accommodate drain size shown or indicated.

K. Cant Strips:
   1. Provide cant strips welded to top surface of roof decking at 1 foot on centers.
   2. Lap end joints not less than 3 inches.

L. Accessories:
1. Provide metal accessories to close all openings and gaps between decking and other construction, at objects projecting through decking, at locations where decking changes direction, and at open ends of deck units where deck units terminate.
2. Weld into position to provide a complete installation.

M. Pour Stops:
1. Provide pour stops continuous around decking perimeter.
2. Locate so that slab terminates beyond perimeter support centerline distance indicated on the Drawings.
3. Weld into position adequately to resist forces due to placement and finishing of concrete and in accordance with manufacturer's written recommendations.

N. Cleaning and Touch-Up:
1. After installation, remove surplus materials and debris from decking surfaces.
2. Field-repair shop-painted surface in accordance with paint or coating manufacturer's written instructions and applicable provisions of the Contract Documents.
3. Repair damaged galvanized surfaces.

3.3 FIELD QUALITY CONTROL

A. Code-Required Special Inspection:
1. Comply with code required Special Inspections and Procedures. City shall provide and absorb the costs associated with the following Special Inspection services.
2. Special inspection is required for:
   a. Verifying proper decking materials and layout.
      1) Frequency: Prior to attaching decking to structure.
   b. Verifying proper weld filler materials, screws, powder actuated mechanical fasteners, weld testing and fastener spacing.
      1) Frequency:
         (a) First 4 hours during the first day of decking attachment; and
         (b) Inspection prior to covering decking Work with concrete, insulation, or other materials.
   c. Weld Testing:
      1) Perform the following test in the Engineer's presence on first deck panel installed:
         (a) Place one end of decking panel over perimeter support and attach only to that support with two welds as specified 6 inches apart.
         (b) Move opposite end of decking panel in plane parallel to span of decking panel until shear distress is observed or apparent in weld.
         (c) Provide welds of sufficient quality to cause local distortions in decking panel around welds and show good perimeter contact between welds and decking panel.
         (d) When results of test are satisfactory and approved by the Engineer, install remaining decking using same weld rod size and type, welding amperage setting, and procedures used in the tested deck.
         (e) Weld test shall be performed for each metal deck welder.
      2) Visually inspect remainder of welds.
         (a) When, in the Engineer's opinion, one or more welds are defective or of insufficient quality, provide additional, acceptable weld adjacent to rejected weld.
         (b) Provide new weld on sound, unburned decking sufficient distance from rejected weld.

B. Defective Work:
1. Metal decking Work shall be deemed defective Work and shall be rejected by the Engineer when it:
   a. Does not comply with SDI requirements and recommendations.
   b. Does not comply with the Contract Documents.
   c. Is improperly manufactured, finished, or installed.
   d. Is damaged resulting in impaired strength, defacing, or inappropriate appearance.

2. Remedy defective Work in accordance with the Contract Documents. Replace damaged decking with new decking in accordance with the Contract Documents.
3. Remove and replace decking that:
   a. Is structurally weak or unsound.
   b. Has burn holes due to improper welding; or
   c. Is deemed defective Work by the Engineer unless the Engineer expressly allows repair or other remedy.

PART 4 MEASUREMENT AND PAYMENT

4.1 METAL AND ROOF DECKING AS SPECIFIED HEREIN SHALL BE INCLUDED IN THE MEASUREMENT AND PAYMENT FOR “PUMP STATION” AS DESCRIBED IN SECTION 03 30 00.

A. No separate measurement and payment will be made for any other work covered by this Section. The cost of any other work shall be considered incidental.

END OF SECTION

SECTION 055000 - METAL FABRICATIONS

PART 1 GENERAL

1.1 SECTION INCLUDES

A. Shop fabricated steel items.
B. Steel framing and supports for mechanical and electrical equipment.
C. Steel framing and supports for applications where they are not specified in another section.

1.2 RELATED REQUIREMENTS

A. Section 099000 - Painting and Coating: Primer and paint finish.
B. Section 099600 - High-Performance Coatings: Primer and paint finish.

1.3 REFERENCE STANDARDS

A. ASTM A276/A276M - Standard Specification for Stainless Steel Bars and Shapes; 2025.
B. ASTM A47/A47M - Standard Specification for Ferritic Malleable Iron Castings; 1999, with Editorial Revision (2022).
C. ASTM A240/A240M - Standard Specification for Chromium and Chromium-Nickel Stainless Steel Plate, Sheet, and Strip for Pressure Vessels and for General Applications; 2025a.
D. ASTM A563/A563M - Standard Specification for Carbon and Alloy Steel Nuts (Inch and Metric); 2021a.
E. ASTM C1107/C1107M - Standard Specification for Packaged Dry, Hydraulic-Cement Grout (Nonshrink); 2020.
F. ASTM D1187/D1187M - Standard Specification for Asphalt-Base Emulsions for Use as Protective Coatings for Metal; 1997 (Reapproved 2024).
G. ASTM D6386 - Standard Practice for Preparation of Zinc (Hot-Dip Galvanized) Coated Iron and Steel Product and Hardware Surfaces for Painting; 2022.
H. ASTM D7803 - Standard Practice for Preparation of Zinc (Hot-Dip Galvanized) Coated Iron and Steel Product and Hardware Surfaces for Powder Coating; 2019.
I. ASTM F593 - Standard Specification for Stainless Steel Bolts, Hex Cap Screws, and Studs; 2024.
J. ASTM F594 - Standard Specification for Stainless Steel Nuts; 2024.
K. ASTM F1554 - Standard Specification for Anchor Bolts, Steel, 36, 55, and 105-ksi Yield Strength; 2020.
L. ASTM F1941/F1941M - Standard Specification for Electrodeposited Coatings on Mechanical Fasteners, Inch and Metric; 2016 (Reapproved 2025).
M. AWS B2.1/B2.1M - Specification for Welding Procedure and Performance Qualification; 2021, with Errata (2023).
N. AWS D1.6/D1.6M - Structural Welding Code - Stainless Steel; 2017, with Amendment (2021).
O. IAS AC172 - Accreditation Criteria for Fabricator Inspection Programs for Structural Steel AC172; 2019, with Editorial Revision (2025).
P. ICC-ES AC01 - Acceptance Criteria for Expansion Anchors in Masonry Elements; 2018, with Editorial Revision (2020).
Q. ICC-ES AC193 - Acceptance Criteria for Mechanical Anchors in Concrete Elements; 2017, with Editorial Revision (2020).
R. MFMA-4 - Metal Framing Standards Publication; 2004.
S. SSPC-Paint 15 - Steel Joist Shop Primer/Metal Building Primer; 2004.
T. SSPC-SP 2 - Hand Tool Cleaning; 2024.
U. SSPC-SP 3 - Power Tool Cleaning; 2024.
V. SSPC-SP 6 - Commercial Blast Cleaning; 2007.

1.4 COORDINATION

A. Coordinate selection of shop primers with topcoats to be applied over them. Comply with paint and coating manufacturers' written recommendations to ensure that shop primers and topcoats are compatible with one another.

B. Coordinate installation of metal fabrications that are anchored to or that receive other work. Furnish setting drawings, templates, and directions for installing anchorages, sleeves, concrete inserts, anchor bolts, and other items with integral anchors, that are to be embedded in concrete or masonry. Deliver such items to Project site in time for installation.

1.5 SUBMITTALS

A. See Section 013000 - Administrative Requirements, for submittal procedures.
B. Shop Drawings: Indicate profiles, sizes, connection attachments, reinforcing, anchorage, size and type of fasteners, and accessories. Include erection drawings, elevations, and details where applicable.
   1. Design data: Submit drawings and supporting calculations, signed and sealed by a qualified professional structural engineer.
C. Welders' Qualification Statement: Welders' certificates in accordance with AWS B2.1/B2.1M and dated no more than 12 months before start of scheduled welding work.
D. Designer's Qualification Statement.
E. Fabricator's Qualification Statement: Provide documentation showing steel fabricator is accredited under IAS AC172.
F. Paint Compatibility Certificates: From manufacturers of topcoats applied over shop primers, certifying that shop primers are compatible with topcoats.
G. Research Reports: For post-installed anchors, from ICC-ES or other qualified testing agency acceptable to authorities having jurisdiction.

1.6 QUALITY ASSURANCE

A. Welder Qualifications: Welding processes and welding operators qualified in accordance with and dated no more than 12 months before start of scheduled welding work.
   1. AWS D1.1/D1.1M, Structural Welding Code - Steel.
   2. AWS D1.6/D1.6M, Structural Welding Code - Stainless Steel.
B. Fabricator Qualifications: A qualified steel fabricator that is accredited by IAS AC172.

1.7 DELIVERY, STORAGE, AND HANDLING

A. Protect metal fabrications from corrosion, moisture, moisture staining, condensation, deformation, and other damage during delivery, storage, and handling.

1.8 FIELD CONDITIONS

A. Field Measurements: Verify actual locations of walls, floor slabs, decks, and other construction contiguous with metal fabrications by field measurements before fabrication.

PART 2 PRODUCTS

2.1 PREFORMANCE REQUIREMENTS

A. Thermal movements: Allow for thermal movements from ambient and surface temperature changes acting on exterior metal fabrications by preventing buckling, opening of joints, overstressing of components, failure of connections, and other detrimental effects.
   1. Temperature change: 120 degrees F, ambient; 180 degrees F, material surfaces
B. Corrosion resistance: Fabricate from the following materials, whether indicated on not on the drawings:
   1. Outside the conditioned building envelope (as defined as outside the line of the air/weather barrier):
      a. Hot dip galvanize. Steel, prepare and show primed as specified in 099000 - Painting and Coating.
      b. Exposed to view: Stainless steel, type 316, confirm locations with Architect.
      c. Concealed from view: Stainless steel, type 304, confirm locations with Architect.
      d. Otherwise, prepare steel and shop prime in accordance with Section 099600 - High-Performance Coatings.

2. Inside the conditioned building envelope: Steel, primed with primer specified in 099000 - Painting and Coating or Stainless steel, type 304, as indicated on Drawings.

C. Galvanic action: Prevent galvanic action and other forms of corrosion by insulating metals and other materials from direct contanct with incompatible materials

1. Coat concealed suface materials that will be in contact with group, concrete, masonry, wood, or dissimilar metals, with a heavy coat of bituminous paint.

2.2 METALS

A. Metal surfaces, general: Provide materials with smooth, flat surfaces unless otherwise indicated. For metal fabrications exposed to view in the completed Work, provide materials without seam marks, roller marks, rolled trade names, or blemishes

B. Recycled content of steel products: Postconsumer recycled content plus one-half of preconsumer recycled content not less than 25 percent.

2.3 MATERIALS - STEEL

A. Steel Plates, Shapes, Bars and Sections: ASTM A36/A36M.

B. Steel Tubing: ASTM A500/A500M Grade B cold-formed structural tubing.

C. Steel Pipe: ASTM A53/A53M, Grade B Schedule 40 (unless otherwise indicated), hot-dip galvanized finish.

D. Stainless Steel, General: ASTM A240/A240M or ASTM A666/A666M, Type 304 or Type 316.

E. Stainless Steel Tubing: ASTM A554, Type 304 or Type 316.

F. Stainless Steel Bars, Shapes and Moldings: ASTM A276/A276M, Type 304 or Type 316.

G. Slotted-Channel Inserts: Cold-formed, hot-dip galvanized-steel box channels (struts) complying with MFMA-4, 1 5/8 inch by 1 5/8 inch (or as indicated) by length indicated with anchor straps or studs not less than 3 inches long at not more than 8 inches on center. Provide with temporary filler and tee-head bolts, complete with washers and nuts, all zinc-plated to comply with ASTM B633, Class Fe/Zn 5, as needed for fastening to inserts.

H. Mechanical Fasteners: Same material as or compatible with materials being fastened; type consistent with design and specified quality level.

1. Exposed exterior provide Type 316 stainless steel fasteners

2. Exterior wall assemblies zinc-plated complying with ASTM B633 or ASTM F1941/F1941M , Class Fe/Zn 5.

I. Bolts, Nuts, and Washers: ASTM A307, Grade A, with hex nuts, ASTM A563/A563M; and, where indicated, flat washers.

J. Stainless Steel Bolts and Nuts: Regular hexagon-head annealed stainless steel bolts, ASTM F593; with hex nuts, ASTM F594; and, where indicated, flat washers.

K. High-Strength Bolts, Nuts, and Washers: ASTM F3125/F3125M, Type 3, Grade A325, Type 3, heavy-hex steel structural bolts; ASTM A563/A563M, Grade DH3, heavy-hex carbon-steel nuts.

L. Anchor Bolts: ASTM F1554, Grade 36, of dimensions indicated; with nuts, ASTM A563/A563M; and, where indicated, flat washers.

1. Hot-dip galvanize or provide mechanically deposited, zinc coating where item being fastened is indicated to be galvanized.

M. Post-Installed Anchors: Torque-controlled expansion anchors, with working capacity greater than or equal to the design load, according to an evaluation report acceptable to authorities having jurisdiction, based on ICC-ES AC01 or ICC-ES AC193 as appropriate for the substrate.

1. Material for Interior Locations: Carbon-steel components zinc plated to comply with ASTM B633 or ASTM F1941/F1941M, Class Fe/Zn 5, unless otherwise indicated.

2. Material for Exterior Locations and Where Stainless Steel Is Indicated: Alloy Group 2 (type 316) stainless steel bolts, ASTM F593, and nuts, ASTM F594.

N. Shop and Touch-Up Primer: SSPC-Paint 15, complying with VOC limitations of authorities having jurisdiction.

2.4 MISCELLANEOUS MATERIALS

A. Shop primers: Provide primers that comply with 099000 - Painting and Coating.

B. Bituminous paint: Cold-applied asphalt emulsion complying with ASTM D1187/D1187M.

C. Nonshrink, Nonmetallic grout: Factory-package, nonstaining, noncorrosive, nongaseous grout complying with ASTM C1107/C1107M. Provide grout specifically recommended by manufacturer for interior and exterior applications.

D. Concrete: Comply with requirements in Section 033000 - Cast-in-Place Concrete for normal-weight, air-entrained, concrete with a minimum 28 day compressive strenght of 3000 psi.

2.5 FABRICATION

A. Cut, drill, and punch metals cleanly and accurately. Remove burrs and ease edges to a radius of approximately 1/32 inch unless otherwise indicated. Remove sharp or rough areas on exposed surfaces.

B. Grind exposed joints flush and smooth with adjacent finish surface. Make exposed joints butt tight, flush, and hairline. Ease exposed edges to small uniform radius.

C. Form bent-metal corners to smallest radius possible without causing grain separation or otherwise impairing work.

D. Form exposed work with accurate angles and surfaces and straight edges.

E. Furnish components required for anchorage of fabrications. Fabricate anchors and related components of same material and finish as fabrication, except where specifically noted otherwise.

F. Weld corners and seams continuously to comply with the following:

1. Use materials and methods that minimize distortion and develop strength and corrosion resistance of base metals.
2. Obtain fusion without undercut or overlap.
3. Remove welding flux immediately.
4. At exposed connections, finish exposed welds and surfaces smooth and blended so no roughness shows after finishing and contour of welded surface matches that of adjacent surface.

G. Form exposed connections with hairline joints, flush and smooth, using concealed fasteners or welds where possible. Where exposed fasteners are required, use Phillips flat-head (countersunk) fasteners unless otherwise indicated. Locate joints where least conspicuous.

H. Fabricate seams and other connections that are exposed to weather in a manner to exclude water. Provide weep holes where water may accumulate.

I. Cut, reinforce, drill, and tap metal fabrications as indicated to receive finish hardware, screws, and similar items.

J. Provide for anchorage of type indicated; coordinate with supporting structure. Space anchoring devices to secure metal fabrications rigidly in place and to support indicated loads.

K. Where units are indicated to be cast into concrete or built into masonry, equip with integrally welded steel strap anchors, 1/8 inch by 1 1/2 inches, with a minimum 6 inches embedment and 2 inches hook, not less than 8 inches from ends and corners of units and 24 inches on center, unless otherwise indicated.

2.6 MISCELLANEOUS FRAMING AND SUPPORTS

A. General: Provide steel framing and supports not specified in other Sections as needed to complete the Work.

B. Fabricate units from steel shapes, plates, and bars of welded construction unless otherwise indicated. Fabricate to sizes, shapes, and profiles indicated and as necessary to receive adjacent construction.

1. Fabricate units from slotted channel framing where indicated.
2. Furnish inserts for units installed after concrete is placed.

C. Galvanize and shop prime exterior miscellaneous framing and supports, unless otherwise indicated.

D. Shop prime interior miscellaneous framing and supports.

2.7 STEEL WELD PLATES AND ANGLES

A. Provide steel weld plates and angles not specified in other Sections, for items supported from concrete construction as needed to complete the Work. Provide each unit with no fewer than two integrally welded steel strap anchors for embedding in concrete.

2.8 FABRICATED ITEMS

A. Bollards: Steel pipe, concrete filled, crowned cap, as detailed; prime paint finish.

B. Provide steel weld plates and angles not specified in other Sections, for items supported from concrete construction as needed to complete the Work. Provide each unit with no fewer than two integrally welded steel strap anchors for embedding in concrete.

2.9 FINISHES - STEEL

A. Finish metal fabrications after assembly.
B. Finish exposed surfaces to remove tool and die marks and stretch lines, and to blend into surrounding surface.
C. Prime paint steel items.
   1. Exceptions: Galvanize items to be embedded in concrete and items to be embedded in masonry.
   2. Exceptions: Do not prime surfaces in direct contact with concrete, where field welding is required, and items to be covered with sprayed fireproofing.
D. Prepare surfaces to be primed in accordance with SSPC-SP2.
E. Clean surfaces of rust, scale, grease, and foreign matter prior to finishing.
F. Galvanizing: Hot-dip galvanize items as indicated to comply with ASTM A153/A153M for steel and iron hardware and with ASTM A123/A123M for other steel and iron products.
   1. Do not quench or apply post-galvanizing treatments that might interfere with primer adhesion.
   2. Fill vent and drain holes that are exposed in the finished Work, unless indicated to remain as weep holes, by plugging with zinc solder and filing off smooth.
G. Preparing Galvanized Items for Shop Priming: Comply with ASTM D6386 for painting and ASTM D7803 for powder coating. Additionally, refer to primer manufacturer's written instructions.
H. Preparing Nongalvanized Items for Shop Priming: Clean nongalvanized surfaces to be shop primed. Remove loose rust and mill scale and spatter, slag, and flux deposits. Prepare surfaces in accordance with the following specifications and standards:
   1. SSPC-SP 3: For interior steel fabrications concealed from view.
   2. SSPC-SP 6 (WAB)/NACE WAB-3: For all other steel fabrications.
      a. Provide a uniform surface profile according to primer manufacturer's written instructions, and no less than 1.5 mils.
I. Shop Priming: Shop prime steel items unless they are to be embedded in concrete, mortar, sprayed-on fireproofing, or masonry, or unless otherwise indicated.
   1. Priming: Immediately after surface preparation, apply shop primer to comply with SSPC-PA 1 for shop painting. Apply primer at spreading rate required to achieve primer manufacturer's recommended dry film thickness. Use priming methods that result in full coverage of joints, corners, edges, and exposed surfaces.
      a. Stripe paint corners, crevices, bolts, welds, and sharp edges.
      b. Apply two coats of shop paint to surfaces that are inaccessible after assembly or erection. Change color of second coat to distinguish it from first.
      c. Conduct primer adhesion testing on galvanized substrates as specified in Section 099000 Painting and Coatings. Submit report.
      d. Exceptions: Galvanize items to be embedded in concrete, items to be embedded in masonry.
      e. Exceptions: Do not prime surfaces in direct contact with concrete, where field welding is required, and items to be covered with sprayed fireproofing.
J. Stainless Steel Finish: No 2B, Bright, unpolished finish.

2.10 FABRICATION TOLERANCES

A. Squareness: 1/8 inch maximum difference in diagonal measurements.
B. Maximum Offset Between Faces: 1/16 inch.
C. Maximum Misalignment of Adjacent Members: 1/16 inch.
D. Maximum Bow: 1/8 inch in 48 inches.
E. Maximum Deviation From Plane: 1/16 inch in 48 inches.

PART 3 EXECUTION

3.1 EXAMINATION

A. Verify that field conditions are acceptable and are ready to receive work.

3.2 PREPARATION

A. Clean and strip primed steel items to bare metal where site welding is required.
B. Furnish setting templates to the appropriate entities for steel items required to be cast into concrete or embedded in masonry.

3.3 INSTALLATION

A. Install items plumb and level, accurately fitted, free from distortion or defects.
B. Provide for erection loads, and for sufficient temporary bracing to maintain true alignment until completion of erection and installation of permanent attachments.
C. Field weld: Comply with the following requirements.
    1. Use materials and methods that minimize distortion and develop strenght and corrosion resistance of base metals.
    2. Obtain fusion without undercut or overlap.
    3. Remove welding flux immediately.
    4. At exposed connections, finish exposed welds and surfaces smooth and blendeed so no roughness shows after finishing and contour of welded surface matches that of adjacent surface.
D. Obtain approval prior to site cutting or making adjustments not scheduled.
E. Fit exposed connections accurately together to form hairline joints. Weld connections that are not to be left as exposed joints but cannot be shop welded because of shipping size limitations. Do not weld, cut, or abrade surfaces of exterior units that have been zinc coated after fabrication and are for bolted or screwed field connections
F. Fastening to In-Placed Construction: Provide anchorage devices and fasteners where metal fabrications are required to be fastened to in-place construction. Provide threaded fastners for use with concrete and masonry inserts, toggle bolts, through bolts, lag screws, wood screws, and other connectors.

3.4 INSTALLING MISCELLANEOUS FRAMING AND SUPPORTS

A. General: Install framing and supports to comply with requirements of items being supported, including manufacturers' written instructions and requirements indicated on Shop Drawings.
B. Anchor supports for overhead doors securely to, and rigidly brace from, building structure.

3.5 INSTALLATION OF METAL BOLLARDS

A. Metal bollards with concrete footings: Anchor bollards in place with concrete footings. Center and align bollards in holes 3 inches above bottom of excavation. Place concrete and vibrate or tamp for consolidation. Support and brace bollards in position until concrete has cured.
B. Fill bollards soldily with concrete, mounding top surface to shed water.
    1. Do not fill removable bollards with concrete.

3.6 FIELD QUALITY CONTROL

A. Owner to provide qualified special inspector to preform:
    1. Verify weld materials and inspect welds
    2. Field Weld Inspection: AWS D1.1/D1.1M.
B. Special inspector to report results promptly and in writing to Contractor and Architect.
C. Remove and replace work where test results indicate noncompliance with specified requirements.
D. Provide any additional testing and inspecting to verify compliance of corrected Work.

END OF SECTION

SECTION 055100 - METAL STAIRS

PART 1 GENERAL

1.1 SECTION INCLUDES

A. Stairs with concrete treads.
B. Structural steel stair framing and supports.
C. Handrails and guards.

1.2 RELATED REQUIREMENTS

A. Section 033000 - Cast-in-Place Concrete: Concrete fill in stair pans; mesh reinforcement for landings.
B. Section 033000 - Cast-in-Place Concrete: Placement of metal anchors in concrete.
C. Section 042000 - Unit Masonry: Placement of metal fabrications in masonry.
D. Section 099600 - High-Performance Coatings: Paint finish.

1.3 REFERENCE STANDARDS

A. AISC 207 - Standard for Certification Programs; 2025.
B. ASCE 7 - Minimum Design Loads and Associated Criteria for Buildings and Other Structures; Most Recent Edition Cited by Referring Code or Reference Standard.
C. ASTM A6/A6M - Standard Specification for General Requirements for Rolled Structural Steel Bars, Plates, Shapes, and Sheet Piling; 2024b.
D. ASTM A36/A36M - Standard Specification for Carbon Structural Steel; 2019.
E. ASTM A123/A123M - Standard Specification for Zinc (Hot-Dip Galvanized) Coatings on Iron and Steel Products; 2024.
F. ASTM A153/A153M - Standard Specification for Zinc Coating (Hot-Dip) on Iron and Steel Hardware; 2023.
G. ASTM A283/A283M - Standard Specification for Low and Intermediate Tensile Strength Carbon Steel Plates; 2024.
H. ASTM A653/A653M - Standard Specification for Steel Sheet, Zinc-Coated (Galvanized) or Zinc-Iron Alloy-Coated (Galvannealed) by the Hot-Dip Process; 2025.
I. ASTM F3125/F3125M - Standard Specification for High Strength Structural Bolts and Assemblies, Steel and Alloy Steel, Heat Treated, Inch Dimensions 120 ksi, 144 ksi, and 150 ksi Minimum Tensile Strength, and Metric Dimensions 830 MPa and 1040 MPa Minimum Tensile Strength; 2025.
J. AWS A2.4 - Standard Symbols for Welding, Brazing, and Nondestructive Examination; 2020.
K. AWS B2.1/B2.1M - Specification for Welding Procedure and Performance Qualification; 2021, with Errata (2023).
L. AWS D1.1/D1.1M - Structural Welding Code - Steel; 2025, with Errata (2026).
M. NAAMM MBG 531 - Metal Bar Grating Manual; 2024.
N. NAAMM MBG 532 - Heavy Duty Metal Bar Grating Manual; 2024.
O. SSPC-Paint 15 - Steel Joist Shop Primer/Metal Building Primer; 2004.
P. SSPC-Paint 20 - Zinc-Rich Coating (Type I - Inorganic, and Type II - Organic); 2019.
Q. SSPC-SP 2 - Hand Tool Cleaning; 2024.

1.4 SUBMITTALS

A. See Section 013000 - Administrative Requirements, for submittal procedures.
B. Shop Drawings: Indicate profiles, sizes, connection attachments, reinforcing, anchorage, size and type of fasteners, and accessories.
   1. Indicate welded connections using standard AWS A2.4 welding symbols. Indicate net weld lengths.
   2. Include the design engineer's seal and signature on each sheet of shop drawings.
C. Design Data, Seismic Performance: Submit documentation that stairs meet performance requirements specified.

D. Welders' Qualification Statement: Welders' certificates in accordance with AWS B2.1/B2.1M and dated no more than 12 months before start of scheduled welding work.

E. Fabricator's Qualification Statement: Provide documentation showing steel fabricator is certified under AISC 207.

1.5 QUALITY ASSURANCE

A. Structural Designer Qualifications: Professional Structural Engineer experienced in design of this work and licensed in the State in which the Project is located, or personnel under direct supervision of such an engineer.

B. Welder Qualifications: Welding processes and welding operators qualified in accordance with AWS D1.1/D1.1M and dated no more than 12 months before start of scheduled welding work.

C. Fabricator Qualifications:

1. A qualified steel fabricator that is certified by the American Institute for Steel Construction (AISC) under AISC 207.
2. A company specializing in manufacturing products specified in this section, with not less than 10 years of documented experience.

PART 2 PRODUCTS

2.1 METAL STAIRS - GENERAL

A. Metal Stairs: Provide stairs of the design specified, complete with landing platforms, vertical and horizontal supports, railings, and guards, fabricated accurately for anchorage to each other and to building structure.

1. Regulatory Requirements: Provide stairs and railings that comply with most stringent requirements of local, state, and federal regulations; where requirements of Contract Documents exceed those of regulations, comply with Contract Documents.
2. Structural Design: Provide complete stair and railing assemblies that comply with the following:
   a. Stair Capacity: Uniform live load of 100 lb/sq ft and a concentrated load of 300 lb with deflection of stringer or landing framing not to exceed 1/240 of span.
   b. Railing Assemblies: Comply with applicable local code.
   c. Seismic Performance: Stairs designed to withstand the effects of earthquake motions determined according to ASCE 7.
      1) Component Importance Factor: 1.5.
      2) No permanent inelastic deformation occurs under movements equal 2.5 percent interstory drift, minimum.
3. Dimensions: As indicated on drawings.
4. Shop assemble components; disassemble into largest practical sections suitable for transport and access to site.
5. No sharp or rough areas on exposed travel surfaces and surfaces accessible to touch.
6. Separate dissimilar metals using paint or permanent tape.

B. Metal Jointing and Finish Quality Levels:

1. Industrial: All joints made neatly.
   a. Welded Joints: Welded on back side wherever possible.
   b. Welds Exposed to Touch: Ground smooth.
   c. Bolts Exposed to Touch in Travel Area: No nuts or screw threads exposed to touch.

C. Fasteners: Same material or compatible with materials being fastened; type consistent with design and specified quality level.

D. Anchors and Related Components: Same material and finish as item to be anchored, except where specifically indicated otherwise; provide all anchors and fasteners required.

2.2 METAL STAIRS WITH CONCRETE TREADS

A. Jointing and Finish Quality Level: Industrial, as defined above.

B. Risers: Closed.

C. Treads: Metal pan with field-installed concrete fill.
   1. Concrete Depth: As indicated on drawings.
   2. Tread Pan Material: Steel sheet.
   3. Tread Pan Thickness: As required by design.
   4. Concrete Reinforcement: Welded wire mesh.
   5. Concrete Finish: Applied abrasive grit.
D. Risers: Same material and thickness as tread pans.
   1. Riser/Nosing Profile: Sloped riser with rounded nosing of minimum radius.
   2. Nosing Depth: Not more than 1-1/2 inch overhang.
   3. Nosing Return: Flush with top of concrete fill, not more than 1/2 inch wide.
E. Stringers: Rolled steel channels.
   1. Stringer Depth: As indicated on drawings.
   2. End Closure: Sheet steel of same thickness as risers welded across ends.
F. Landings: Same construction as treads, supported and reinforced as required to achieve design load capacity.
G. Railings: As indicated in Section 055213.

2.3 HANDRAILS AND GUARDS

A. Guards: Pipe railings, see Section 055213.

2.4 MATERIALS

A. Steel Sections: ASTM A36/A36M.
B. Steel Plates: ASTM A6/A6M or ASTM A283/A283M.
C. Galvanized Steel Sheet: ASTM A653/A653M, Structural Steel (SS) Grade 33/230 with G90/Z275 coating.
D. Gratings: Bar gratings that comply with NAAMM MBG 531 or NAAMM MBG 532, whichever applies based on bar sizes.
E. Concrete Fill: See Section 033000.
F. Concrete Reinforcement: Mesh type as detailed, galvanized.

2.5 ACCESSORIES

A. Steel Bolts, Nuts, and Washers: ASTM F3125/F3125M, Type 1, and galvanized to ASTM A153/A153M where connecting galvanized components.
B. Welding Materials: AWS D1.1/D1.1M; type required for materials being welded.
C. Shop and Touch-Up Primer: SSPC-Paint 15, and comply with VOC limitations of authorities having jurisdiction.
D. Touch-Up Primer for Galvanized Surfaces: SSPC-Paint 20 Type I - Inorganic, and comply with VOC limitations of authorities having jurisdiction.

2.6 SHOP FINISHING

A. Clean surfaces of rust, scale, grease, and foreign matter prior to finishing.
B. Do not prime surfaces in direct contact with concrete or where field welding is required.
C. Prime Painting: Use specified shop- and touch-up primer.
   1. Preparation of Steel: In accordance with SSPC-SP 2 Hand Tool Cleaning.
   2. Number of Coats: One.
D. Galvanizing: Hot-dip galvanize to minimum requirements of ASTM A123/A123M.
   1. Touch up abraded areas after fabrication using specified touch-up primer for galvanized surfaces.

2.7 STEEL FINISHES

A. Paint: See sections 099000 - Painting and Coating and 099600 - High-Performance Coatings.
B. Color: As indicated on drawings.

PART 3 EXECUTION

3.1 EXAMINATION

A. Verify that field conditions are acceptable and are ready to receive work.

3.2 PREPARATION

A. When field welding is required, clean and strip primed steel items to bare metal.
B. Supply items required to be cast into concrete and embedded in masonry with setting templates.

3.3 INSTALLATION

A. Install components plumb and level, accurately fitted, free from distortion or defects.
B. Provide anchors, plates, angles, hangers, and struts required for connecting stairs to structure.
C. Allow for erection loads, and for sufficient temporary bracing to maintain true alignment until completion of erection and installation of permanent attachments.
D. Provide welded field joints where specifically indicated on drawings. Perform field welding in accordance with AWS D1.1/D1.1M.
E. Other field joints may be either welded or bolted provided the result complies with the limitations specified for jointing quality levels.
F. Obtain approval prior to site cutting or creating adjustments not scheduled.
G. After erection, prime welds, abrasions, and surfaces not shop primed or galvanized, except surfaces to be in contact with concrete.

3.4 TOLERANCES

A. Maximum Variation From Plumb: 1/4 inch per story, non-cumulative.
B. Maximum Offset From True Alignment: 1/4 inch.

END OF SECTION

SECTION 055213 - PIPE AND TUBE RAILINGS

PART 1 GENERAL

1.1 SECTION INCLUDES

A. Wall mounted handrails.
B. Stair railings and guardrails.

1.2 RELATED REQUIREMENTS

A. Section 055100 - Metal Stairs: Associated elements not found specified in this section.
B. Section 092116 - Gypsum Board Assemblies: Placement of backing plates in stud wall construction.
C. Section 099600 - High-Performance Coatings: Paint finish.

1.3 REFERENCE STANDARDS

A. ACI CODE-318 - Building Code for Structural Concrete—Code Requirements and Commentary; 2025.
B. ADA Standards - 2010 ADA Standards for Accessible Design; 2010.
C. AISC 207 - Standard for Certification Programs; 2025.
D. ASTM A36/A36M - Standard Specification for Carbon Structural Steel; 2019.
E. ASTM A53/A53M - Standard Specification for Pipe, Steel, Black and Hot-Dipped, Zinc-Coated, Welded and Seamless; 2024.
F. ASTM A123/A123M - Standard Specification for Zinc (Hot-Dip Galvanized) Coatings on Iron and Steel Products; 2024.
G. ASTM A153/A153M - Standard Specification for Zinc Coating (Hot-Dip) on Iron and Steel Hardware; 2023.
H. ASTM A500/A500M - Standard Specification for Cold-Formed Welded and Seamless Carbon Steel Structural Tubing in Rounds and Shapes; 2023.
I. ASTM A780/A780M - Standard Practice for Repair of Damaged and Uncoated Areas of Hot-Dip Galvanized Coatings; 2020.
J. ASTM B633 - Standard Specification for Electrodeposited Coatings of Zinc on Iron and Steel; 2023.
K. ASTM C1107/C1107M - Standard Specification for Packaged Dry, Hydraulic-Cement Grout (Nonshrink); 2020.
L. ASTM D1187/D1187M - Standard Specification for Asphalt-Base Emulsions for Use as Protective Coatings for Metal; 1997 (Reapproved 2024).
M. ASTM E488/E488M - Standard Test Methods for Strength of Anchors in Concrete Elements; 2022.
N. ASTM E894 - Standard Test Method for Anchorage of Permanent Metal Railing Systems and Rails for Buildings; 2023.
O. ASTM E935 - Standard Test Methods for Performance of Permanent Metal Railing Systems and Rails for Buildings; 2021.
P. ASTM F593 - Standard Specification for Stainless Steel Bolts, Hex Cap Screws, and Studs; 2024.
Q. ASTM F594 - Standard Specification for Stainless Steel Nuts; 2024.
R. ASTM F1941/F1941M - Standard Specification for Electrodeposited Coatings on Mechanical Fasteners, Inch and Metric; 2016 (Reapproved 2025).
S. ASTM E985 - Standard Specification for Permanent Metal Railing Systems and Rails for Buildings; 2024.
T. AWS A2.4 - Standard Symbols for Welding, Brazing, and Nondestructive Examination; 2020.
U. AWS B2.1/B2.1M - Specification for Welding Procedure and Performance Qualification; 2021, with Errata (2023).
V. AWS D1.1/D1.1M - Structural Welding Code - Steel; 2025, with Errata (2026).
W. ICC-ES AC193 - Acceptance Criteria for Mechanical Anchors in Concrete Elements; 2017, with Editorial Revision (2020).
X. SSPC-SP 16 - Brush-Off Blast Cleaning of Coated and Uncoated Galvanized Steel, Stainless Steels, and Non-Ferrous Metals; 2020.

1.4 ADMINISTRATIVE REQUIREMENTS

A. Coordinate selection of shop primers with topcoats to be applied over them. Comply with paint and coating manufacturers' written recommendations to ensure that shop primers and topcoats are compatible with one another.

B. Coordinate installation of anchorages for railings. Furnish setting drawings, templates, and directions for installing anchorages, including sleeves, concrete inserts, anchor bolts, and items with integral anchors, that are to be embedded in concrete, masonry, or gypsum board construction. Deliver such items to project site in time for installation.

C. Schedule installation so wall attachments are made only to completed walls. Support railings temporarily that satisfy structural performance requirements.

1.5 SUBMITTALS

A. See Section 013000 - Administrative Requirements, for submittal procedures.

B. Shop Drawings: Indicate profiles, sizes, connection attachments, anchorage, size and type of fasteners, and accessories.

1. Indicate welded connections using standard AWS A2.4 welding symbols. Indicate net weld lengths.

C. Samples: Submit two, 8 inch long samples of handrail. Submit two samples of elbow, wall bracket, and end stop.

D. Product Test Reports: For tube railings, for tests performed by a qualified testing agency, according to ASTM E894 and ASTM E935.

E. Welders' Qualification Statement: Welders' certificates in accordance with AWS B2.1/B2.1M and dated within the previous 12 months.

F. Fabricator's Qualification Statement.

G. Installer Qualifications Statement.

H. Research Reports: For post-installed anchors, from ICC-ES or other qualified testing agency acceptable to authorities having jurisdiction.

1.6 QUALITY ASSURANCE

A. Welder Qualifications: Welding processes and welding operators qualified within previous 12 months.

1. AWS D1.1/D1.1M, "Structural Welding Code - Steel."

B. Fabricator Qualifications:

1. A qualified steel fabricator that is certified by the American Institute for Steel Construction (AISC) under AISC 207.

2. A company specializing in manufacturing products specified in this section, with not less than 5 years of documented experience.

C. Installer Qualifications: Fabricator of products.

1.7 FIELD CONDITIONS

A. Field Measurements: Verify actual locations of walls, floor slabs, decks, and other construction contiguous with railings by field measurements before fabrication and indicate measurements on shop drawings. Coordinate fabrication schedule with construction progress to avoid delaying the work.

PART 2 PRODUCTS

2.1 MANUFACTURERS

A. Source Limitations: Obtain each type of railing from single source from single manufacturer.

B. Product Options: Information on drawings and in specifications establishes requirements for system's aesthetic effects and performance characteristics. Aesthetic effects are indicated by dimensions, arrangements, alignment, and profiles of components and assemblies as they relate to sightlines, to one another, and to adjoining construction. Performance characteristics are indicated by criteria subject to

verification by one or more methods, including structural analysis, preconstruction testing, field testing, and in-service performance.

1. Do not modify intended aesthetic effects, as judged solely by Architect, except with Architect's approval. If modifications are proposed, submit comprehensive explanatory data to Architect for review.

2.2 RAILINGS - GENERAL REQUIREMENTS

A. Design, fabricate, and test railing assemblies in accordance with the most stringent requirements of applicable local code.

B. Comply with ASTM E985.

C. Distributed Loads: Design railing assembly, wall rails, and attachments to resist distributed force of 50 pounds per linear foot applied to the top of the assembly and in any direction, without damage or permanent set. Test in accordance with ASTM E935.

D. Concentrated Loads: Design railing assembly, wall rails, and attachments to resist a concentrated force of 200 pounds applied at any point on the top of the assembly and in any direction, without damage or permanent set. Test in accordance with ASTM E935.

E. Allow for expansion and contraction of members and building movement without damage to connections or members.

1. Interior railings in direct sunlight, allow for thermal movements from ambient and surface temperature changes.

a. Temperature Change: 120 degrees F, ambient; 180 degree F.

F. Accessibility Requirements: Comply with applicable provisions in the 2010 ADA Standards for Accessible Design and the accessibility requirements of the CBC, including, but not limited to the following:

1. The top of handrail grasping surface shall be mounted as indicated on the Drawings, and shall be mounted between 34 inches to 38 inches above the nosing of the treads surface.

2. The handgrip portion of handrails for stairs and ramps shall not be less than 1 1/4 inches nor more than 1 1/2 inches in cross-sectional dimension and shall be mounted 1 1/2 inches clear from side walls.

3. All surfaces and welded joints of the grip portion of handrails shall be ground smooth with no sharp corners. Gripping surfaces shall be uninterrupted by newel posts, other construction elements or obstructions. Edges shall have a minimum radius of 1/8 inch.

4. Any wall or other surface adjacent to handrail shall be free of sharp or abrasive elements.

G. Control of Corrosion: Prevent galvanic action and other forms of corrosion by insulating metals and other materials from direct contact with incompatible materials.

H. Recycled Content of Steel Products: Postconsumer recycled content plus one-half of preconsumer recycled content not less than 25 percent.

I. Dimensions: See drawings for configurations and heights.

J. Metal Surfaces, General: Provide materials with smooth surfaces, without seam marks, roller marks, rolled trade names, stains, discolorations, or blemishes.

K. Brackets, Flanges, and Anchors: Cast or formed metal of same type of material and finish as supported rails unless otherwise indicated.

1. Provide type of bracket with flange tapped for concealed anchorage to threaded hanger bolt and that provides 1 1/2 inch clearance from inside face of handrail to finished wall surface.

L. Provide anchors and other components as required to attach to structure, made of same materials as railing components unless otherwise indicated; where exposed fasteners are unavoidable provide flush countersunk fasteners.

M. Provide welding fittings to join lengths, seal open ends, and conceal exposed mounting bolts and nuts, including but not limited to elbows, T-shapes, splice connectors, flanges, escutcheons, and wall brackets.

N. Welded and Brazed Joints: Make visible joints butt tight, flush, and hairline; use methods that avoid discoloration and damage of finish; grind smooth, polish, and restore to required finish.

1. Ease exposed edges to a small uniform radius.

2. Welded Joints:

a. Carbon Steel: Perform welding in accordance with AWS D1.1/D1.1M.

2.3 STEEL RAILING SYSTEM

A. Steel Tube: ASTM A500/A500M Grade B cold-formed structural tubing.

B. Steel Pipe: ASTM A53/A53M Grade B Schedule 40, galvanized finish.
C. Plates, Shapes, and Bars: ASTM A36/A36M.
D. Welding Fittings: Factory- or shop-welded from matching pipe or tube; seams continuously welded; joints and seams ground smooth.

2.4 FASTENERS

A. General: Provide the following:
1. Hot-Dip Galvanized Railing Components: Type 304 stainless steel or hot-dip zinc-coated steel fasteners complying with ASTM A153/A153M for zinc coating.
2. Provide exposed fasteners with finish matching appearance, including color and texture, of railings.
B. Fasteners for Anchoring Railings to Other Construction: Select fasteners of type, grade, and class required to produce connections suitable for anchoring railings to other types of construction indicated and capable of withstanding design loads.
C. Fasteners for Interconnecting Railing Components:
1. Provide concealed fasteners for interconnecting railing components and for attaching them to other work, unless exposed fasteners are unavoidable.
D. Post-Installed Concrete Anchors: Fabricated from corrosion-resistant materials, with allowable load or strength design capacities calculated according to ICC-ES AC193 and ACI CODE-318 greater than or equal to the design load, as determined by testing per ASTM E488/E488M ASTM E 488 conducted by a qualified testing agency. Special inspection of post-installed concrete anchors shall be in compliance with California Building Code Table 1705.3 and the evaluation report for the anchor.
1. Material for Interior Locations: Carbon-steel components zinc-plated to comply with ASTM B633 or ASTM F1941/F1941M, Class Fe/Zn 5, unless otherwise indicated.
2. Material for Exterior Locations and Where Stainless Steel Is Indicated: Alloy stainless steel bolts, ASTM F593, and nuts, ASTM F594.

2.5 MISCELLANEOUS MATERIALS

A. Welding Rods and Bare Electrodes: Select according to AWS specifications for metal alloy welded.
B. Bituminous Paint: Cold-applied asphalt emulsion complying with ASTM D1187/D1187M.
C. Nonshrink, Nonmetallic Grout: Factory-packaged, nonstaining, noncorrosive, non-gaseous grout complying with ASTM C1107/C1107M. Provide grout specifically recommended by manufacturer for interior and exterior applications.
D. Anchoring Cement: Factory-packaged, nonshrink, nonstaining, hydraulic-controlled expansion cement formulation for mixing with water at Project site to create pourable anchoring, patching, and grouting compound.
1. Water-Resistant Product: At exterior locations and where indicated provide formulation that is resistant to erosion from water exposure without needing protection by a sealer or waterproof coating and that is recommended by manufacturer for exterior use.

2.6 FABRICATION

A. Accurately form components to suit specific project conditions and for proper connection to building structure.
B. Fit and shop assemble components in largest practical sizes for delivery to site.
C. Fabricate components with joints tightly fitted and secured.
D. Fabricate connections that are exposed to weather in a manner that excludes water.
1. Provide weep holes where water may accumulate.
2. Locate weep holes in inconspicuous locations.
E. Welded Joints:
1. Exterior Components: Continuously seal joined pieces by intermittent welds and plastic filler. Drill condensate drainage holes at bottom of members at locations that will not encourage water intrusion.
2. Interior Components: Continuously seal joined pieces by intermittent welds and plastic filler.
3. Grind exposed joints flush and smooth with adjacent finish surface. Make exposed joints butt tight, flush, and hairline. Ease exposed edges to small uniform radius.
F. Weld connections that cannot be shop welded due to size limitations.

1. Weld in accordance with AWS D1.1/D1.1M.
2. Match shop welding and bolting.
3. Clean welds, bolted connections, and abraded areas.
4. Touch up shop primer and factory-applied finishes.
5. Repair galvanizing with galvanizing repair paint per ASTM A780/A780M.

G. Non-welded Connections: Connect members with concealed mechanical fasteners and fittings. Fabricate members and fittings to produce flush, smooth, rigid, hairline joints.
1. Fabricate splice joints for field connection using an epoxy structural adhesive if this is manufacturer's standard splicing method.

H. Form Changes in Direction as Follows:
1. As detailed.
2. By flush bends or by inserting prefabricated flush-elbow fittings.
3. By radius bends of radius indicated or by inserting prefabricated elbow fittings of radius indicated.

I. Bend members in jigs to produce uniform curvature for each configuration required. Maintain cross section of member throughout entire bend without buckling, twisting, cracking, or otherwise deforming exposed surfaces of components.

J. Close exposed ends of hollow railing members with prefabricated cap and end fittings of same metal and finish as railings.

K. Provide wall returns at ends of wall-mounted handrails unless otherwise indicated. Close ends of returns unless clearance between end of rail and wall is 1/4 inch or less.

L. Brackets, Flanges, Fittings, and Anchors: Provide wall brackets, flanges, miscellaneous fittings, and anchors to interconnect railing members to other work unless otherwise indicated.
1. At brackets and fittings fastened to plaster or gypsum board partitions, provide crush-resistant fillers or other means to transfer loads through wall finishes to structural supports and prevent bracket or fitting rotation and crushing of substrate.

M. Provide inserts and other anchorage devices for connecting railings to concrete or masonry work. Fabricate anchorage devices capable of withstanding loads imposed by railings. Coordinate anchorage devices with supporting structure.

N. For railing posts set in concrete, provide steel (for interior railings) or stainless-steel (for exterior railings) sleeves not less than 6 inches long with inside dimensions not less than 1/2 inch greater than outside dimensions of post, with metal plate forming bottom closure.

O. Toe Boards: Where indicated, provide toe boards at railings around openings and at edge of open-sided floors and platforms. Fabricate to dimensions and details indicated.

2.7 STEEL FINISHES

A. Galvanizing: Hot-dip galvanize exterior tube railings after fabrication to comply with ASTM A153/A153M for steel and iron hardware and with ASTM A123/A123M for other steel and iron products.
1. Do not quench or apply post galvanizing treatments that might interfere with paint adhesion.
2. Fill vent holes and grind smooth after galvanizing.
3. Galvanize exterior steel tube railings unless otherwise indicated.

B. Preparing Galvanized Items for Shop Priming: After galvanizing, thoroughly clean metal fabrications of grease, dirt, oil, flux, and other foreign matter. Prepare surfaces to comply with Section 099000 - Painting and Coating manufacturer's written instructions, but no less than SSPC-SP 16.

C. Shop Priming: Shop prime galvanized steel items unless they are to be field welded or embedded in concrete, masonry, or mortar.
1. Shop prime with primers specified in Section 099000 - Painting and Coating and 099600 - High-Performance Coatings.
2. Apply two coats of shop primer to surfaces that are inaccessible after assembly or erections.

PART 3 EXECUTION

3.1 EXAMINATION

A. Verify that field conditions are acceptable and are ready to receive work.

B. Examine substrate assemblies, where reinforced to receive anchors. Verify locations of concealed reinforcements are clearly marked for Installer.

3.2 PREPARATION

A. Clean and strip primed steel items to bare metal where site welding is required.
B. Supply items required to be cast into concrete or embedded in masonry with setting templates, for installation as work of other sections.
C. Apply one coat of bituminous paint to concealed aluminum surfaces that will be in contact with cementitious or dissimilar materials.

3.3 INSTALLATION

A. Install in accordance with manufacturer's instructions.
B. Install components plumb and level, accurately fitted, free from distortion or defects, with tight joints.
C. Install railings in compliance with ADA Standards for accessible design at applicable locations.
D. Anchor railings securely to structure.
    1. Adjust railings before anchoring to ensure matching alignment at abutting joints.
E. Expansion Joints: Install expansion joints at locations indicated but not farther apart than required to accommodate thermal movement. Provide slip-joint internal sleeve extending 2 inches beyond joint on either side, fasten internal sleeve securely to one side, and locate joint within 6 inches of post.

3.4 INSTALLATION - POSTS

A. Where core-drilled post anchorage is indicated on drawings, form or core-drill holes to depth as indicated on drawings and 3/4 inch larger than outside dimension of post for installing posts in concrete. Clean holes of loose material, insert posts, and fill annular space between post and concrete with nonshrink, nonmetallic grout or anchoring cement, mixed and placed to comply with anchoring material manufacturer's written instructions.
    1. Core-drilled holes not indicated on drawings, obtain written approval of Structural Engineer of Record before core drilling.
B. Cover anchorage joint with flange of same metal as post, welded to post after placing anchoring material or attached to post with set screws.
C. Anchor posts to metal surfaces with flanges, angle type, or floor type as required by conditions, connected to posts and to metal supporting members as follows:
    1. For steel tube railings, weld flanges to post and bolt to metal supporting surfaces.

3.5 INSTALLATION - RAILINGS

A. Anchor railing ends to concrete and masonry with brackets on underside of rails connected to railing ends and anchored to wall construction with anchors and bolts.
B. Anchor railing ends to metal surfaces with flanges bolted to metal surfaces and welded to railing ends or connected to railing ends, using non-welded connections.
C. Attach handrails to walls with wall brackets. Provide brackets with 1 1/2 inch clearance from inside face of handrail and finished wall surface.
    1. Use type of bracket with flange tapped for concealed anchorage to threaded hanger bolt.
    2. Locate brackets as indicated or, if not indicated, at spacing required to support structural loads.
D. Secure wall brackets and railing end flanges to building construction as follows:
    1. For concrete and solid masonry anchorage, use post-installed concrete/masonry anchors.
    2. For steel-framed partitions, fasten brackets directly to steel framing or concealed steel reinforcements, using self-tapping screws of size and type required to support structural loads.

3.6 FIELD QUALITY CONTROL (BY OWNER)

A. Special Inspections: Owner will engage a qualified testing agency to perform tests and inspections and to prepare test reports.
    1. Verify weld materials and inspect welds.
    2. Verify installation of post-installed concrete anchors.

B. Special inspector will report results promptly and in writing to Contractor and Architect.
C. Remove and replace work where test results indicate that it does not comply with specified requirements.
D. Additional testing and inspecting, at Contractor's expense, will be performed to determine compliance of replaced or additional work with specified requirements.

3.7 CLEANING

A. Galvanized Surfaces: Clean field welds, bolted connections, and abraded areas, and repair galvanizing to comply with ASTM A780/A780M.

3.8 PROTECTION

A. Protect finishes of railings from damage during construction period with temporary protective coverings approved by railing manufacturer. Remove protective coverings at time of Substantial Completion.
B. Restore finishes damaged during installation and construction period, so no evidence remains of correction work. Return items that cannot be refinished in the field to the shop; make required alterations and refinish entire unit, or provide new units.

END OF SECTION

SECTION 064100 - ARCHITECTURAL WOOD CASEWORK

PART 1 GENERAL

1.1 SECTION INCLUDES

A. Plastic-Laminate-Clad Architectural Cabinet.
B. Cabinet hardware and accessories.

1.2 REFERENCE STANDARDS

A. ANSI A208.1 - American National Standard for Particleboard; 2022.
B. ANSI A208.2 - Medium Density Fiberboard (MDF) for Interior Applications; 2022.
C. ASTM E84 - Standard Test Method for Surface Burning Characteristics of Building Materials; 2026.
D. AWMAC/WI (NAAWS) - North American Architectural Woodwork Standards; 2021, with Errata.
E. BHMA A156.9 - Cabinet Hardware; 2020.
F. BHMA A156.11 - American National Standard for Cabinet Locks; 2024.
G. BHMA A156.16 - Standard for Auxiliary Hardware; 2023.
H. BHMA A156.18 - Standard for Materials and Finishes; 2020.
I. ISO 4586-2 - High-Pressure Decorative Laminates (HPL, HPDL) – Sheets Based on Thermosetting Resins (Usually Called Laminates) – Part 2: Determination of Properties; 2018.
J. SCAQMD 1168 - Adhesive and Sealant Applications; 1989, with Amendment (2022).

1.3 ADMINISTATIVE REQUIREMENTS

A. Coordinate the work with plumbing rough-in, electrical rough-in, and installation of associated and adjacent components.
B. Coordinate sizes and locations of framing, blocking, furring, reinforcements, and other related units of work specified in other sections to support loads imposed by installed and fully-loaded woodwork.
C. Sequence installation to ensure utility connections are achieved in an orderly and expeditious manner.
D. Preinstallation meeting 1 week before starting work of this section; require attendance by all affected installers.

1.4 SUBMITTALS

A. See Section 013000 - Administrative Requirements for submittal procedures.
B. Sustainable Design Submittals:
   1. Laboratory Test Reports: For adhesives, indicating compliance with requirements for low emitting materials.
   2. Laboratory Test Reports: For composite wood products, indicating compliance with requirements for low emitting materials.
C. Product Data:
   1. Provide manufacturer's product data, storage and handling instructions for factory-fabricated units.
   2. Provide instructions for attachment hardware and finish hardware.
   3. Waterborne Treatments: For products receiving a waterborne treatment, include statement that moisture content of treated materials was reduced to levels specified before shipment to Project site.
D. Shop Drawings: Plans, elevations, sections, and details. Indicate materials, component profiles, fastening methods, jointing details, and accessories.
   1. Provide information as required by AWMAC/WI (NAAWS).
   2. Shop drawing inspection must be performed by a Woodwork Institute expert - Fee $400.
E. Samples: Submit actual samples of architectural cabinet construction, minimum 12 inches square, illustrating proposed cabinet substrate and finish.
F. Certificate: Submit labels and certificates required by quality assurance and quality control programs.
G. Qualification Data: For fabricator / installer.

H. Field quality-control reports.

I. Product Certificates: For the following:

1. Composite wood products.
2. High-pressure decorative laminate.
3. Adhesives.

J. Manufacturer's Instructions: Provide manufacturer's installation instructions for factory-fabricated units.

1.5 QUALITY ASSURANCE

A. Fabricator / Installer Qualifications: Company specializing in fabricating the products specified in this section with minimum 10 years of documented experience.

1. Accredited participant in the specified Woodwork Institute certification program prior to the commencement of fabrication and throughout the duration of the project.
2. Single Source Responsibility: Provide fabrication and installation from single casework fabricator.

1.6 DELIVERY, STORAGE, AND HANDLING

A. Do not deliver cabinets until painting and similar finish operations that might damage architectural cabinets have been completed in installation areas. Store cabinets in installation areas or in areas where environmental conditions comply with requirements specified in field conditions article.

B. Deliver interior finish carpentry materials only when environmental conditions comply with requirements specified for installation areas. If interior finish carpentry materials must be stored in other than installation areas, store only where environmental conditions comply with requirements specified for installation areas.

1.7 FIELD CONDITIONS

A. Woodwork Acclimation: Assure that woodwork has been acclimatized to the field conditions for a minimum of 72 hours before installation is commenced.

B. Field Measurements: Where cabinets are indicated to fit to other construction, verify dimensions of other construction by field measurements before fabrication, and indicate measurements on shop drawings. Coordinate fabrication schedule with construction progress to avoid delaying the Work.

1. Locate concealed framing, blocking, and reinforcements that support cabinets by field measurements before being enclosed/concealed by construction, and indicate measurements on shop drawings.

C. Established Dimensions: Where cabinets are indicated to fit to other construction, establish dimensions for areas where cabinets are to fit. Provide allowance for trimming at site, and coordinate construction to ensure that actual dimensions correspond to established dimensions.

D. Do not install finish carpentry materials that are wet, moisture damaged, or mold damaged.

1. Indications that materials are wet or moisture damaged include, but are not limited to, discoloration, sagging, or irregular shape.

PART 2 PRODUCTS

2.1 ARCHITECTURAL CABINET FABRICATOR

A. Single Source Responsibility: Provide and install this work from single fabricator.

2.2 ARCHITECTURAL WOOD CASEWORK

A. Provide casework and casework components in sizes and profiles as indicated on drawings.

2.3 PERFORMANCE REQUIREMENTS

A. Quality Standard: Custom Grade, in accordance with AWMAC/WI (NAAWS), unless noted otherwise.

1. System Structural Performance: Provide cabinets and support framing to withstand the effects of gravity loads and stresses without permanent deformation, excessive deflection, or binding of doors.

2. The contract documents contain requirements that are more stringent than the referenced woodwork quality standard. Comply with requirements of contract documents in addition to those of the referenced quality standard.

B. Accessibility Requirements: Comply with applicable provisions in the USDOJ's 2010 ADA Standards for Accessible Design and the accessibility requirements of the California Building Code (CBC), including, but not limited to, the following:

1. For operable parts of accessible casework, comply with CBC Section 11B-309.

C. Sustainable Design (CALGreen): Adhesives and composite wood products shall comply with CALGreen mandatory measures:

1. Adhesives: Adhesives, adhesive bonding primers, adhesive primers, sealants, sealant primers and caulks shall comply with local or regional air pollution control or air quality management district rules where applicable, or SCAQMD 1168 VOC limits, as shown in CALGreen Tables 5.504.4.1 and 5.504.4.2. Such products also shall comply with the SCAQMD 1168 prohibition on the use of certain toxic compounds (chloroform, ethylene dichloride methylene chloride, perchloroethylene and trichloroethylene). Adhesives shall have no added formaldehyde resins.

a. Adhesives shall have a VOC content of 70 g/L or less.

2. Composite Wood Products: Hardwood plywood and medium density fiberboard composite wood products used on the interior or exterior of the building shall meet the requirements for formaldehyde as specified in ARB's Air Toxics Control Measure (ATCM) for Composite Wood (17 CCR 93120 et seq.) Those materials not exempted under the ATCM must meet the specified emission limits, as shown in CALGreen Table 5.504.4.5.

D. Fire Test Response Characteristics (Plastic Laminates): As determined by testing identical plastic laminate applied with identical adhesives to substrates according to test method indicated below by a qualified testing agency. Identify products with appropriate markings of applicable testing agency.

1. Surface Burning Characteristics: Comply with ASTM E84; testing by a qualified testing agency. Identify products with appropriate markings of applicable testing agency.

a. Flame Spread Index: Class B 75 or less.

b. Smoke Developed Index: 450 or less.

E. Cabinets:

1. Adjustable Shelf Loading: 40 psf.

F. Final finish to be of First-Class Workmanship, free of manufacturing imperfections (such as tool or machine marks), and consistent in exposed finish appearance.

2.4 PANEL CORE MATERIALS

A. Particleboard: Composite panel composed of cellulosic particles, additives, and bonding system; comply with ANSI A208.1.

1. Grade: M-2; moisture resistance: MR50.

B. Medium Density Fiberboard (MDF): Composite panel composed of cellulosic fibers, additives, and bonding system; cured under heat and pressure; comply with ANSI A208.2.

1. Grade: 130; moisture resistance: MR50.

2.5 PLASTIC-LAMINATE-CLAD ARCHITECTURAL CABINETS

A. Type of Construction: As indicated on drawings, or if not indicated, Type A - frameless.

B. Door and Drawer Front Style: As indicated on drawings, or if not indicated, flush overlay.

C. High-Pressure Decorative Laminate: ISO 4586-2 , grades as indicated on drawings or if not indicated, as required by quality standard.

1. Basis of Design Products: As indicated on drawings.

D. Laminate Cladding for Exposed Surfaces:

1. Horizontal Surfaces: Horizontal Grade Laminate (HGL).

2. Vertical Surfaces: Vertical Grade Surface (VGS).

3. Pattern Direction: Vertically for doors and fixed panels.

E. Materials for Semi-exposed Surfaces:

1. Surfaces Other Than Drawer Bodies: High-pressure decorative laminate, Grade ISO 4586-2, VGS.

a. Edges of Plastic-Laminate Shelves: PVC tape, 0.018 inch minimum thickness, matching laminate in color, pattern, and finish.

b. For semi-exposed backs of panels with exposed plastic-laminate surfaces, provide surface of high-pressure decorative laminate, ISO 4586-2, Grade VGS.

2. Drawer Sides and Backs: Solid maple or birch.

3. Drawer Bottoms: Hardwood plywood.

F. Dust Panels: 1/4 inch plywood or tempered hardboard above compartments and drawers unless located directly under tops.

G. Concealed Backs of Panels with Exposed Plastic-Laminate Surfaces: High-pressure decorative laminate, ISO 4586-2, Backing Sheet Grade (BKL).

H. Drawer Construction: Fabricate with exposed fronts fastened to sub-front with mounting screws from interior of body.

1. Join sub-fronts, backs, and sides with glued dovetail joints.

I. Colors, Patterns, and Finishes: Provide materials and products that result in colors and textures of exposed laminate surfaces complying with the following requirements:

1. As indicated on drawings.

J. High Pressure Decorative Laminate (HPDL): ISO 4586-2, types as recommended for specific applications.

2.6 ACCESSORIES AND CABINET HARDWARE

A. General: Provide commercial quality BHMA A156.9 Grade 1 , heavy-duty cabinet hardware and accessory materials associated with the AWMAC/WI (NAAWS) architectural cabinets grade.

B. Frameless Concealed Hinges (European Type): BHMA A156.9 , B01601, self-closing, 120 degrees of opening. Provide three hinges for doors more than 48 inches high.

C. Pulls: Back-mounted hardware as indicated on Drawings, or if not indicated, per the following:

1. Where Designated as Accessible: Back-mounted solid metal wire pulls, 4 inches long, 5/16 inch in diameter.

2. Elsewhere: Back-mounted decorative knobs as selected by Architect from manufacturer's full range of standard and optional knobs.

D. Catches: Magnetic catches, BHMA A156.9, B43161.

E. Drawer Slides: BHMA A156.9, except complying with the following per the North American Architectural Woodwork Standards:

1. Static Load Capacity: 100 pounds - heavy-duty.

2. Dynamic Load Capacity: 75 pounds / 100,000 cycles - heavy-duty.

3. Type: Full extension.

4. Material: Stainless-steel slides.

5. Motion Feature: Self-closing mechanism.

F. Locks: Cam type complying with BHMA A156.11, Type E07121 for door locks and Type E07041 for drawer locks.

1. Provide locks on cabinets and drawers where indicated.

2. Quantity: Minimum of 10 keys per lock and 2 master keys.

3. Unless otherwise indicated, all locks shall be keyed alike.

G. Magnetic Lock:

1. Provide locks on cabinets and drawers where indicated.

2. Provide keyed lock as indicated 2.9.G, as back up during power loss.

H. Door Silencers: BHMA A156.16, L03011.

I. Grommets for Cable Passage: 1 1/4 inch outside dimension, molded-plastic grommets and matching plastic caps with slot for wire passage.

1. Color: As indicated on drawings, or if not indicated, color closest to cabinet finish color.

J. Exposed Hardware Finishes: For exposed hardware, provide finish that complies with BHMA A156.18 for BHMA finish number indicated.

1. Finish: As indicated on drawings.

K. For concealed hardware, provide manufacturer's standard finish that complies with product class requirements in BHMA A156.9.

L. Adhesive: Type recommended by fabricator to suit application.

1. VOC Content: Provide wood substrate adhesives with VOC content of 30 g/L or less.

M. Furring, Blocking, Shims, and Hanging Strips: Softwood or hardwood lumber, kiln-dried to less than 15 percent moisture content.

N. Anchors: Select material, type, size, and finish required for each substrate for secure anchorage. Provide metal expansion sleeves or expansion bolts for post installed anchors. Use nonferrous metal or hot dip galvanized anchors and inserts at inside face of exterior walls and at floors.

2.7 SHOP FINISHING

A. Finish architectural cabinets at fabricator's shop as specified in this Section. Defer only final touchup, cleaning, and polishing until after installation.

PART 3 EXECUTION

3.1 EXAMINATION

A. Verify casework and materials required for installation have been delivered, handled and stored as specified.

B. Examine areas, with Fabricator present, for compliance with requirements for installation tolerances, location of reinforcements, and other conditions affecting performance of the Work.

C. Verify wood blocking that provides casework backing is installed as indicated on drawings.

D. Verify location and sizes of rough-in plumbing and rough-in electrical associated with work of this section.

E. Proceed with installation only after unsatisfactory conditions have been corrected.

3.2 PREPARATION

A. Before installation, condition cabinets to humidity conditions in installation areas for not less than 72 hours.

B. Before installing woodwork, examine shop-fabricated work for completion and complete work as required, including removal of packing and backpriming.

3.3 INSTALLATION

A. Install work in accordance with AWMAC/WI (NAAWS) requirements for grade indicated.

B. Anchor cabinets to anchors or blocking built in or directly attached to structural substrates.

C. Install cabinets level, plumb, and true in line to a tolerance of 1/8 inch in 96 inches using concealed shims.

1. Install cabinets without distortion so doors and drawers fit openings and are accurately aligned. Adjust hardware to center doors and drawers in openings and to provide unencumbered operation. Complete installation of hardware and accessory items as indicated.

2. Maintain veneer sequence matching of cabinets with transparent finish.

3.4 ADJUSTING, CLEANING, AND PROTECTION

A. Adjust hardware for smooth operation in accordance with hardware manufacturer's documented instructions.

B. Repair damaged and defective cabinets, where possible, to eliminate functional and visual defects. Where not possible to repair, replace architectural cabinets. Adjust joinery for uniform appearance.

C. Clean, lubricate, and adjust hardware.

D. Clean cabinets on exposed and semi-exposed surfaces. Touch up finishes to restore damaged or soiled areas.

E. Protection: Protect cabinets during remainder of construction period so that cabinets are without damage or deterioration at time of Substantial Completion.

F. See Section 017000 - Execution and Closeout Requirements for additional requirements

END OF SECTION

SECTION 068316 - FIBERGLASS REINFORCED PANELING

PART 1 GENERAL

1.1 SECTION INCLUDES

A. Fiberglass reinforced plastic panels.
B. Trim.

1.2 RELATED REQUIREMENTS

A. Section 079200 - Joint Sealants

1.3 REFERENCE STANDARDS

A. ASTM D5319 - Standard Specification for Glass-Fiber Reinforced Polyester Wall and Ceiling Panels; 2022.
B. ASTM E84 - Standard Test Method for Surface Burning Characteristics of Building Materials; 2026.

1.4 SUBMITTALS

A. See Section 013000 - Administrative Requirements, for submittal procedures.
B. Product Data: Provide data on specified products, describing physical and performance characteristics; including sizes, patterns and colors available; and installation instructions.
C. Samples: Submit two samples 4 by 4 inch in size illustrating material and surface design of panels.
D. Installer's qualification statement.
E. Product Test Reports: For each plastic paneling system, for tests performed by a qualified testing agency.

1.5 DELIVERY, STORAGE, AND HANDLING

A. Store panels flat, indoors, on a clean, dry surface. Remove packaging and allow panels to acclimate to room temperature for 48 hours prior to installation.

1.6 FIELD CONDITIONS

A. Environmental Limitations: Do not deliver or install plastic paneling until spaces are enclosed and weathertight and temporary HVAC system is operating and maintaining ambient temperature and humidity conditions at occupancy levels during the remainder of the construction period.

PART 2 PRODUCTS

2.1 PREFORMANCE REQUIREMENTS

A. Fire-Test-Response Characteristics: As determined by a qualified testing agency. Identify products with appropriate markings of applicable testing agency, and shall comply with Chapter 8 of the California Building Code.
B. Sustainable Design Requirements (CALGreen):
   1. Adhesives: VOC content of 50 g/L or less.
   2. Sealants: VOC content of 250 g/L or less.

2.2 PANEL SYSTEMS

A. Wall Panels:
   1. Panel Thickness: 0.09 inch, minimum.
   2. Surface Design: As indicated on Drawings.
   3. Color: As indicated on Drawings.

4. Attachment Method: Adhesive only, with trim and sealant in joints.

2.3 MATERIALS

A. Panels: Fiberglass reinforced plastic (FRP), complying with ASTM D5319.
   1. Surface Burning Characteristics: Maximum flame spread index of 25 and smoke developed index of 450; when system tested in accordance with ASTM E84.
B. Trim: Vinyl; color coordinating with panel.
C. Adhesive: Type recommended by panel manufacturer; not containing formaldehyde or volatile organic compounds.
D. Sealant: Type recommended by panel manufacturer; color matching panel; Mildew-resistant silicone.

PART 3 EXECUTION

3.1 EXAMINATION

A. Verify existing conditions and substrate flatness before starting work.
B. Verify that substrate conditions are ready to receive the work of this section.
C. Verify mechanical, electrical, and other building components affecting work of this section are placed and ready to receive work of this section.
D. Proceed with installation only after unsatisfactory conditions have been corrected.

3.2 PREPARATION

A. Surface Preparation: Clean substrate surfaces prior to installing paneling.
B. Prepare substrate by sanding high spots and filling low spots as needed to provide flat, even surface for panel installation.
C. Condition panels by unpacking and placing in installation space before installation according to manufacturer's written recommendations.
D. Locate panel joints as indicated on drawings, or if not indicated, to provide equal panels at ends of walls not less than half the width of full panels so that trimmed panels at corners are not less than 12 inches wide.

3.3 INSTALLATION - WALLS

A. Install panels in accordance with manufacturer's instructions.
B. Cut and drill panels with carbide tipped saw blades, drill bits, or snips.
C. Apply adhesive to the back side of the panel using trowel as recommended by adhesive manufacturer.
D. Apply panels to wall with seams plumb and pattern aligned with adjoining panels.
E. Install panels with manufacturer's recommended gap for panel field and corner joints.
F. Place trim on panel before fastening edges, as required.
G. Fill channels in trim with sealant before attaching to panel.
H. Install trim with adhesive and screws or nails, as required.
I. Seal gaps at floor, ceiling, and between panels with applicable sealant to prevent moisture intrusion.
J. Remove excess sealant after paneling is installed and prior to curing.

3.4 CLEANING AND PROTECTION

A. Clean exposed surfaces of panels and trim in accordance with manufacturer's instructions.
B. Protect installed plastic paneling from subsequent construction operations.

END OF SECTION

SECTION 070553 - FIRE AND SMOKE ASSEMBLY IDENTIFICATION

PART 1 GENERAL

1.1 SECTION INCLUDES

A. Identification markings for fire and smoke rated partitions, and fire rated walls.

1.2 RELATED REQUIREMENTS

A. Section 099000 - Painting and Coating: Paint finish.

1.3 REFERENCE STANDARDS

A. ICC (IBC) - International Building Code; Most Recent Edition Adopted by Authority Having Jurisdiction, Including All Applicable Amendments and Supplements.

1.4 SUBMITTALS

A. See Section 013000 - Administrative Requirements, for submittal procedures.
B. Product Data: Manufacturer's printed product literature for each type of marking, indicating font, foreground and background colors, wording, and overall dimensions.

1.5 FIELD CONDITIONS

A. Do not install painted markings when ambient temperature is lower than recommended by coating manufacturer.

PART 2 PRODUCTS

2.1 FIRE AND SMOKE ASSEMBLY IDENTIFICATION

A. Regulatory Requirements: Comply with "Marking and Identification" requirements of "Fire-Resistance Ratings and Fire Tests" chapter of ICC (IBC).
B. Adhered Fire and Smoke Assembly Identification Signs: Printed vinyl sign with factory applied adhesive backing.
C. Applied Fire and Smoke Assembly Identification: Identification markings applied to partition with paint and a code compliant stencil. See Section 099000 - Painting and Coating for products.
D. Languages: Provide sign markings in English.

PART 3 EXECUTION

3.1 EXAMINATION

A. Verify that substrate surfaces are ready to receive work.

3.2 PREPARATION

A. See Section 099000 - Painting and Coating for substrate preparation for painted markings.

3.3 INSTALLATION

A. Locate markings as required by ICC (IBC).
B. Install adhered markings in accordance with manufacturer's instructions.
C. Install applied markings in accordance with Section 099000 - Painting and Coating.
D. Install neatly, with horizontal edges level.

E. Wall Identification: Permanently label walls containing penetration firestopping systems with the words "FIRE AND/OR SMOKE BARRIER - PROTECT ALL OPENINGS," using lettering not less than 3 inches high and with minimum 3/8 inch strokes.Locate in accessible concealed floor, floor-ceiling, or attic space at 15 feet from end of wall and at intervals not exceeding 30 feet.

1. Locate in accessible concealed floor, floor-ceiling, or attic space at 15 feet from end of wall and at intervals not exceeding 30 feet.

F. Penetration Identification: Identify each penetration firestopping system with legible metal or plastic labels. Attach labels permanently to surfaces adjacent to and within 6 inches of penetration firestopping system edge so labels are visible to anyone seeking to remove penetrating items or firestopping systems. Use mechanical fasteners or self-adhering-type labels with adhesives capable of permanently bonding labels to surfaces on which labels are placed. Include the following information on labels:

1. The words "Warning - Penetration Firestopping - Do Not Disturb. Notify Building Management of Any Damage."
2. Contractor's name, address, and phone number.
3. Designation of applicable testing and inspecting agency.
4. Date of installation.
5. Manufacturer's name.
6. Installer's name.

G. Protect from damage until Date of Substantial Completion; repair or replace damaged markings.

END OF SECTION

SECTION 071400 - FLUID-APPLIED WATERPROOFING

PART 1 GENERAL

1.1 SECTION INCLUDES

A. Polyurethane waterproofing.

1.2 RELATED REQUIREMENTS

A. Section 033000 - Cast-in-Place Concrete: Concrete substrate.
B. Section 071300 - Sheet Waterproofing: Source limitations coordinated with this Section.
C. Section 071800 - Traffic Coatings: Source limitations coordinated with this Section.
D. Section 072100 - Thermal Insulation: Insulation used for protective cover.
E. Section 075419 - Polyvinyl-Chloride Roofing - Sika Sarnafil : Roof drainage gutter waterproofing transition.
F. Section 079200 - Joint Sealants Joint sealants if not provided as part of this Section.

1.3 REFERENCE STANDARDS

A. ASTM C836/C836M - Standard Specification for High Solids Content, Cold Liquid-Applied Elastomeric Waterproofing Membrane for Use with Separate Wearing Course; 2018 (Reapproved 2022).
B. ASTM C898/C898M-09 - Standard Guide for Use of High Solids Content, Cold Liquid-Applied Elastomeric Waterproofing Membrane with Separate Wearing Course; 2017.
C. ASTM C1471/C1471M - Standard Guide for the Use of High Solids Content Cold Liquid-Applied Elastomeric Waterproofing Membrane on Vertical Surfaces; 2022.
D. ASTM D412 - Standard Test Methods for Vulcanized Rubber and Thermoplastic Elastomers--Tension; 2016 (Reapproved 2021).
E. ASTM D1621 - Standard Test Method for Compressive Properties of Rigid Cellular Plastics; 2016 (Reapproved 2023).
F. ASTM D2240 - Standard Test Method for Rubber Property--Durometer Hardness; 2015 (Reapproved 2021).
G. ASTM D4258 - Standard Practice for Surface Cleaning Concrete for Coating; 2023.
H. ASTM D4541 - Standard Test Method for Pull-Off Strength of Coatings Using Portable Adhesion Testers; 2022.
I. ASTM F1869 - Standard Test Method for Measuring Moisture Vapor Emission Rate of Concrete Subfloor Using Anhydrous Calcium Chloride; 2023.
J. ASTM F2170 - Standard Test Method for Determining Relative Humidity in Concrete Floor Slabs Using in situ Probes; 2019a.
K. NRCA (WM) - The NRCA Waterproofing Manual; 2021.

1.4 PREINSTALLATION MEETINGS

A. Preinstallation Conference: Conduct conference at Project site.
   1. Meet with Owner, Architect, envelope consultant, inspection agency, waterproofing installer, waterproofing manufacturer's technical representative, and installers whose work interfaces with or affects waterproofing, including installers of adjacent construction that penetrates waterproofing system.
   2. Review waterproofing requirements including, but not limited to, the following:
      a. Cast-in-place concrete surface finishing and restrictions on using curing compounds.
      b. Surface preparation.
      c. Substrate condition and pretreatment.
      d. Minimum curing period.
      e. Forecasted weather conditions.
      f. Special details and sheet flashings.
      g. Installation procedures.
      h. Testing and inspection procedures.

i. Protection and repairs.

1.5 SUBMITTALS

A. See Section 013000 - Administrative Requirements for submittal procedures.
B. Product Data: Provide data for membrane, surface conditioner, flexible flashings, joint cover sheet, and joint and crack sealants.
C. Shop Drawings: Indicate special joint or termination conditions and conditions of interface with other materials.
   1. Show locations and extent of waterproofing.
   2. Include details for substrate joints and cracks, penetrations, inside and outside corners, tie-ins with adjoining waterproofing systems, and other termination conditions.
D. Samples: For each exposed product and for each color and texture specified, including the following products:
   1. Color samples for exposed waterproofing, on rigid backing, 8 inches square.
   2. Drainage panels, 4 inches square.
E. Manufacturer's qualification statement.
F. Installer's qualification statement.
G. Substrate Acceptance: Letter signed and executed by manufacturer’s technical representative indicating manufacturer’s acceptance of substrate prior to application of waterproofing.
H. Inspection Report: Copy of waterproofing manufacturer’s inspection of completed waterproofing installation.
I. Research/Evaluation Reports: For single-component polyurethane waterproofing, from ICC-ES or City of Los Angeles research report (COLA-RR).
J. Field quality-control reports.
K. Sample Warranties: For special warranties.

1.6 QUALITY ASSURANCE

A. Manufacturer Qualifications: A firm with not less than 10 years experience regularly engaged in the production and sales of waterproofing that has been used for similar applications with successful results, that meets or exceeds performance requirements indicated, and of documenting this performance by inclusion in test reports. Manufacturer shall have factory-authorized service representatives who are available for consultation, periodic Project-site observations, and on-site assistance. Manufacturer shall also have a valid research/evaluation report for single-component polyurethane waterproofing system indicating compliance with the International Building Code / California Building Code.
   1. Manufacturer for waterproofing system provided under this Section shall be same manufacturer for all waterproofing project Sections.
B. Installer Qualifications: A firm with not less than 10 years experience installing waterproofing similar in material, design, and extent to that indicated for this Project, whose work has resulted in installations with a record of successful in-service performance, and that employs installers and supervisors who are trained and approved by manufacturer to perform work of this Section.

1.7 MOCK-UPS

A. See Section 014000 - Quality Requirements for additional requirements.
B. Construct mock-up consisting of the first 100 sq ft of horizontal and vertical fluid-applied waterproofing; to represent finished work including internal and external corners, drainage panel, base flashings, control joints, expansion joints, counterflashings, and protective cover.
C. Bond Test: Determine the compatibility of the waterproofing to the concrete by a bond test in accordance with the waterproofing manufacturer’s recommendations. Submit copy of test reports to Owner and Architect.
D. Approval of mockups does not constitute approval of deviations from the Contract Documents contained in mockups unless Architect specifically approves such deviations in writing.
E. Mock-up may remain as part of work.

1.8 DELIVERY, STORAGE, AND HANDLING

A. Store materials in their original undamaged containers in a clean, dry, protected location and within the temperature range required by waterproofing manufacturer.
B. Remove and replace materials that cannot be applied within their stated shelf life.
C. Protect stored materials from direct sunlight.

1.9 FIELD CONDITIONS

A. Environmental Limitations: Apply waterproofing within the range of ambient and substrate temperatures recommended in writing by waterproofing manufacturer.
   1. Do not apply waterproofing to a damp or wet substrate, when relative humidity exceeds 85 percent, or when temperatures are less than 5 degrees F above dew point.
   2. Do not apply waterproofing in snow, rain, fog or mist, or when such weather conditions are imminent during application and curing period.
B. Maintain adequate ventilation during application and curing of waterproofing materials.

1.10 WARRANTY

A. See Section 017800 - Closeout Submittals for additional warranty requirements.
B. Special Warranty: Manufacturer's standard or customized warranty, in which manufacturer and installer agree to repair or replace components of waterproofing system that do not comply with requirements or that fail to remain watertight within specified warranty period.
   1. Warranty includes removing and reinstalling drainage panels, flashings, accessories, substrates and overburdens.
   2. Warranty is based upon minimum application of waterproofing in thickness as specified below.
   3. Warranty Period: 10 years from date of Substantial Completion.

PART 2 PRODUCTS

2.1 MANUFACTURERS

A. Basis-of-Design Manufacturer: Subject to compliance with requirements, provide waterproofing products by the following:
   1. Tremco Incorporated. See below for specific products.
B. Source Limitations: Obtain waterproofing materials provided under this section and all other project waterproofing Sections from a single source manufacturer.

2.2 PERFORMANCE REQUIREMENTS

A. Provide a complete waterproofing system that prevents the passage of water, including all applicable sealants, transitions, joints, termination assemblies, and accessories whether indicated or not.
B. Single-component, reinforced, modified polyurethane waterproofing system shall be compatible with composite liquid polyurethane ultraviolet light stable waterproofing, so as to allow the waterproofing system to flash with the primary waterproofing system as part of an overall system warranty.
C. Waterproofing membrane components shall have a maximum VOC content of 250 g/L, in accordance with California Green Building Code

2.3 FLUID-APPLIED WATERPROOFING MATERIALS

A. Polyurethane Waterproofing: Cold-applied, high solids content polyurethane waterproofing complying with ASTM C836/C836M.
   1. Cured Thickness: 60 mil, 0.060 inch, minimum.
   2. Suitable for installation over green concrete substrates.
   3. Components: One.
   4. Solids Content: Minimum 80 percent.
   5. Tensile Strength: 200 psi, minimum, measured in accordance with ASTM D412.

6. Ultimate Elongation: 600 percent, minimum, measured in accordance with ASTM D412.
7. Durometer Hardness, Type 00 50: 60, minimum, in accordance with ASTM D2240.
8. Adhesion: 150 psi, minimum, measured in accordance with ASTM D4541.
9. Compatible with composite liquid polyurethane ultraviolet stable waterproofing as transition flashing.
10. Basis of Design Products:
    a. Tremco Commercial Sealants & Waterproofing; TREMproof 250GC: www.tremcosealants.com/#sle.

2.4 ACCESSORIES

A. General: Provide accessories materials recommended in writing by waterproofing manufacturer for intended use and compatible with one another and with waterproofing.
B. Primer: Manufacturer's standard factory-formulated polyurethane or epoxy primer.
C. Joint Reinforcing Strip: Manufacturer's recommended fiberglass mesh or polyester fabric.
D. Bond-Breaker Tape: Polyethylene tape or other plastic tape recommended by sealant manufacturer for preventing sealant from adhering to rigid, inflexible joint-filler materials or joint surfaces at back of joint. Provide self-adhesive tape where applicable.
E. Sealant for Joints and Cracks in Substrate: Type compatible with waterproofing material and as recommended by waterproofing manufacturer or as specified in Section 079200 - Joint Sealants.
F. Protection Mat: Polyester mat at least 14 oz/sq yd to protect vertical or horizontal waterproofing membranes.
    1. Thickness: 100 mil, 0.10 inch, minimum.
    2. Width: 40 inches.
    3. Basis of Design Products:
        a. Tremco Commercial Sealants & Waterproofing; Tremco Protection Mat: www.tremcosealants.com/#sle.
G. Drainage Panel: Drainage layer with geotextile filter fabric on earth side.
    1. Thickness: As indicated on drawings.
    2. Core Compressive Strength: 15,000 psf, minimum, in accordance with ASTM D1621
    3. Basis of Design Products:
        a. Tremco Commercial Sealants & Waterproofing; TREMDrain1000: www.tremcosealants.com/#sle. Vertical Services.
H. Other Accessories: Provide other materials, not specifically described, but required for a complete and proper installation, as selected by the Contractor and approve by the membrane system manufacturer as compatible, subject to review of the Architect.

PART 3 EXECUTION

3.1 EXAMINATION

A. Verify existing conditions before starting work.
B. Verify that concrete has cured and aged for minimum time period recommended in writing by waterproofing manufacturer.
    1. Moisture Testing: Test for moisture using the methods indicated below or as recommended by fluid-applied waterproofing manufacturer.
        a. Anhydrous Calcium Chloride Test: ASTM F1869.
        b. Internal Relative Humidity Test: Using in situ probes, ASTM F2170.
    2. Where moisture levels exceed manufacturer's written limitations, implement remedial action(s) recommended by waterproofing manufacturer.
    3. Engage waterproofing manufacturer’s technical representative to inspect substrate conditions prior to application of waterproofing membrane. Obtain manufacturer’s written acceptance of substrate conditions and submit to Architect.
C. Verify substrate surfaces are free of frozen matter, dampness, loose particles, cracks, pits, projections, penetrations, or foreign matter detrimental to adhesion or application of waterproofing system.

D. Verify that substrate surfaces are smooth, free of honeycomb or pitting, and not detrimental to full contact bond of waterproofing materials.
E. Verify that items penetrating surfaces to receive waterproofing are securely installed.
F. Where existing conditions are responsibility of another installer, notify Architect of unsatisfactory conditions.
G. Do not proceed with this work until unsatisfactory conditions have been corrected.

3.2 PREPARATION - GENERAL

A. Clean, prepare, and treat substrates in accordance with waterproofing manufacturer's written instructions.
   1. Mask adjacent finished surfaces.
   2. Remove contaminants and film-forming coatings from substrates.
   3. Remove projections and excess materials and fill voids with substrate patching material.
   4. Prepare and treat joints and cracks in substrate per ASTM D4258 and waterproofing manufacturer's written instructions.
   5. For accessory materials, follow manufacturers application instructions.
B. Remove fins, ridges, and other projections.
C. Detail Preparation: Prepare non-moving shrinkage cracks, large cracks, construction joints, expansion joints, projections and protrusions, penetrations, drains, and changes in plane in accordance with waterproofing manufacturer's written instructions and details, using accessory materials specified.
   1. Adhere strips of elastomeric sheet to moving joints and large cracks by embedding in a layer of fluid-applied waterproofing and overlay with coat of fluid-applied waterproofing.

3.3 TERMINATIONS AND PENETRATIONS

A. Install elastomeric and composite reinforced flashing to form connect and seal waterproofing material to adjacent components of building waterproofing system, including, but not limited to, roofing system waterproofing, exterior fenestration systems, door framing, and other openings.
   1. Seal top of through-wall flashings to waterproofing with continuous transition strips of type recommended by waterproofing manufacturer for application.
   2. Install elastomeric sheets at terminations of waterproofing membrane according to manufacturer's written instructions.
   3. Install termination bars and mechanically fasten to top of elastomeric flashing sheet at terminations and perimeter of waterproofing.
B. Install cant strips at inside corners.

3.4 INSTALLATION

A. Install waterproofing to specified minimum thickness in accordance with manufacturers instructions and NRCA (WM) applicable requirements.
B. Start installing waterproofing in presence of manufacturer's technical representative.
C. Apply primer or surface conditioner at a rate recommended by manufacturer, and protect conditioner from rain or frost until dry.
D. Terminations: Install terminations of waterproofing membrane in accordance with ASTM C898/C898M-09 and ASTM C1471/C1471M, as applicable to application, at not less than minimum height recommended by waterproofing manufacturer. Overlap waterproofing on to intersecting construction a minimum of 24 inches
E. Seal membrane and flashings to adjoining surfaces.
   1. Install termination bar along edges.
   2. Install counterflashing over exposed edges.

3.5 INSTALLATION - DRAINAGE PANEL

A. Place and secure molded-sheet drainage panels, with geotextile facing away from wall or deck substrate, according to manufacturer's written instructions. Use adhesive or another method that does not penetrate waterproofing. Lap edges and ends of geotextile to maintain continuity. Protect installed molded-sheet drainage panels during subsequent construction.
B. Molded-Sheet Collector-Panel System: Install according to manufacturer's written instructions.

3.6 FIELD QUALITY CONTROL

A. See Section 014000 - Quality Requirements for additional requirements.

B. Testing Agency: Owner will engage a qualified testing agency to perform testing and inspections and to prepare test reports.

1. If test results or inspections show waterproofing does not comply with requirements, remove and replace or repair the waterproofing as recommended in writing by manufacturer, and make further repairs after retesting and inspecting until waterproofing installation passes.

C. Contractor's Inspector: Contractor shall engage a manufacturer's technical representative for technical assistance and guidance for preparation and application of waterproofing. At a minimum, arrange for manufacturer's technical representative to observe installation of waterproofing system during mock-up (first 100 square feet of initial installation), at mid-point of the installation, and at completion. Provide additional field observation as required to obtain warranty specified and when requested by Architect or Owner. After each field visit, submit manufacturer's written report of observations within 3 working days. The report shall note overall quality of work, deficiencies, and any other concerns, and recommend corrective action.

1. Final Waterproofing Inspection: Arrange for manufacturer's technical personnel to inspect waterproofing installation upon completion of application, and for those areas that remain visible to view, again at time of project's overall Substantial Completion.
2. If test results or inspections show waterproofing does not comply with requirements, remove and replace or repair the waterproofing as recommended in writing by manufacturer, and make further repairs after retesting and inspecting until waterproofing installation passes.
3. Prepare test and inspection reports.

3.7 PROTECTION

A. Do not permit traffic over unprotected or uncovered membrane.

B. Protect waterproofing from damage and wear during remainder of construction period.

C. Protect waterproofing materials from exposure to ultraviolet light for period in excess of that acceptable to waterproofing manufacturer; replace overexposed materials and retest.

SECTION 071800 - TRAFFIC COATINGS

PART 1 GENERAL

1.1 SECTION INCLUDES

A. Waterproof coatings for traffic surfaces.

1.2 RELATED REQUIREMENTS

A. Section 071300 - Sheet Waterproofing and 071400 - Fluid-Applied Waterproofing: Source limitations coordinated with this Section.
B. Section 079200 - Joint Sealants Joint sealants if not provided as part of this Section.

1.3 REFERENCE STANDARDS

A. ASTM C957/C957M - Standard Specification for High-Solids Content, Cold Liquid-Applied Elastomeric Waterproofing Membrane With Integral Wearing Surface; 2017.
B. ASTM C1127/C1127M - Standard Guide for Use of High Solids Content, Cold Liquid-Applied Elastomeric Waterproofing Membrane with an Integral Wearing Surface; 2015.
C. ASTM C1193 - Standard Guide for Use of Joint Sealants; 2025.
D. ASTM D4258 - Standard Practice for Surface Cleaning Concrete for Coating; 2023.
E. ASTM D4259 - Standard Practice for Preparation of Concrete by Abrasion Prior to Coating Application; 2024.
F. ASTM F1869 - Standard Test Method for Measuring Moisture Vapor Emission Rate of Concrete Subfloor Using Anhydrous Calcium Chloride; 2023.
G. ASTM F2170 - Standard Test Method for Determining Relative Humidity in Concrete Floor Slabs Using in situ Probes; 2019a.

1.4 PREINSTALLATION MEETINGS

A. Preinstallation Conference: Conduct conference at Project site.
    1. Meet with Owner, Architect, envelope consultant, inspection agency, waterproofing installer, waterproofing manufacturer's technical representative, and installers whose work interfaces with or affects waterproofing, including installers of adjacent construction that penetrates waterproofing system.
    2. Review waterproofing requirements including, but not limited to, the following:
        a. Cast-in-place concrete surface finishing and restrictions on using curing compounds.
        b. Surface preparation.
        c. Substrate condition and pretreatment.
        d. Minimum curing period.
        e. Forecasted weather conditions.
        f. Special details and sheet flashings.
        g. Installation procedures.
        h. Testing and inspection procedures.
        i. Protection and repairs.

1.5 SUBMITTALS

A. See Section 013000 - Administrative Requirements for submittal procedures.
B. Product Data: Include product characteristics and limitations. Identify dissolving solvents, fuels, and potential destructive compounds.
C. Shop Drawings: Indicate special joint or termination conditions and conditions of interface with other materials.
    1. Show locations and extent of waterproofing.

2. Include details for substrate joints and cracks, penetrations, inside and outside corners, tie-ins with adjoining waterproofing systems, and other termination conditions.

D. Samples: For each exposed product and for each color and texture specified, including the following products:

1. Color samples for exposed waterproofing, on rigid backing, 8 inches square.

E. Manufacturer's qualification statement.

F. Applicator's qualification statement.

G. Substrate Acceptance: Letter signed and executed by manufacturer’s technical representative indicating manufacturer’s acceptance of substrate prior to application of waterproofing.

H. Inspection Report: Copy of waterproofing manufacturer’s inspection of completed waterproofing installation.

I. Research/Evaluation Reports: For single-component polyurethane waterproofing, from ICC-ES or City of Los Angeles research report (COLA-RR).

J. Field quality-control reports.

K. Sample Warranties: For special warranties.

1.6 QUALITY ASSURANCE

A. Manufacturer Qualifications: A firm with not less than 10 years experience regularly engaged in the production and sales of waterproofing that has been used for similar applications with successful results, that meets or exceeds performance requirements indicated, and of documenting this performance by inclusion in test reports. Manufacturer shall have factory-authorized service representatives who are available for consultation, periodic Project-site observations, and on-site assistance. Manufacturer shall also have a valid research/evaluation report for single-component polyurethane waterproofing system indicating compliance with the International Building Code / California Building Code.

1. Manufacturer for waterproofing system provided under this Section shall be same manufacturer for all waterproofing project Sections.

B. Installer Qualifications: A firm with not less than 10 years experience installing waterproofing similar in material, design, and extent to that indicated for this Project, whose work has resulted in installations with a record of successful in-service performance, and that employs installers and supervisors who are trained and approved by manufacturer to perform work of this Section.

1.7 MOCK-UPS

A. See Section 014000 - Quality Requirements for additional requirements.

B. Build mockup for each typical waterproofing installation including accessories to demonstrate surface preparation, crack and joint treatments, inside and outside corner treatments, color, and protection.

1. Commence mockup installation in presence of manufacturer's technical representative.
2. Description: First 100 square feet of installation.
3. Bond Test: Determine the compatibility of the cold fluid-applied waterproofing to the concrete by a bond test in accordance with the cold fluid-applied waterproofing manufacturer’s recommendations. Submit copy of test reports to Owner and Architect.

C. Mock-up may remain as part of work.

1.8 DELIVERY, STORAGE, AND HANDLING

A. Store materials in their original undamaged containers in a clean, dry, protected location and within the temperature range required by waterproofing manufacturer.

B. Remove and replace materials that cannot be applied within their stated shelf life.

C. Protect stored materials from direct sunlight.

1.9 FIELD CONDITIONS

A. Environmental Limitations: Apply waterproofing within the range of ambient and substrate temperatures recommended in writing by waterproofing manufacturer.

1. Do not apply waterproofing to a damp or wet substrate, when relative humidity exceeds 85 percent, or when temperatures are less than 5 degrees F above dew point.
2. Do not apply waterproofing in snow, rain, fog or mist, or when such weather conditions are imminent during application and curing period.

B. Maintain adequate ventilation during application and curing of waterproofing materials.

1.10 WARRANTY

A. See Section 017800 - Closeout Submittals for additional warranty requirements.
B. Special Warranty: Manufacturer's standard or customized warranty, in which manufacturer and installer agree to repair or replace components of waterproofing system that do not comply with requirements or that fail to remain watertight within specified warranty period.
   1. Warranty includes removing and reinstalling drainage panels, flashings, accessories, substrates and overburdens.
   2. Warranty is based upon minimum application of waterproofing in thickness as specified below.
   3. Warranty Period: 10 years from date of Substantial Completion.

PART 2 PRODUCTS

2.1 MANUFACTURERS

A. Basis of Design Manufacturer: Subject to compliance with requirements, provide waterproofing products by the following:
   1. Tremco Incorporated. See below for specific products.
B. Source Limitations: Obtain waterproofing materials provided under this Section and all other project waterproofing Sections from a single source manufacturer.

2.2 PERFORMANCE REQUIREMENTS

A. Provide a complete waterproofing system that prevents the passage of water, including all applicable sealants, transitions, joints, termination assemblies, and accessories whether indicated or not.
B. Single-component, reinforced, modified polyurethane waterproofing system shall be compatible with composite liquid polyurethane ultraviolet line stable waterproofing, so as to allow the waterproofing system to flash with the primary waterproofing system as part of an overall system warranty.
C. Waterproofing membrane components shall have a maximum VOC content of 250 g/L, in accordance with California Green Building Code

2.3 TRAFFIC COATINGS

A. Traffic Decking Waterproof Coating System: Modified polyurethane system with base coat, intermediate coat, and top coat. Comply with ASTM C957/C957M and manufacturer's written requirements.
   1. Color: As selected by Architect.
   2. Basis of Design Products:
      a. Tremco Commercial Sealants & Waterproofing; Vulkem 350NF/950NF/951NF: www.tremcosealants.com/#sle.
   3. Base Coat Thickness: As recommended in writing by manufacturer for substrate and service conditions indicated, and as required to attain warranty duration indicated, but no less than 25 wet mils.
   4. Intermediate Coat Thickness: As recommended in writing by manufacturer for substrate and service conditions indicated, and as required to attain warranty duration indicated, but no less than 12 wet mils.
   5. Top Coat Thickness: As recommended in writing by manufacturer for substrate and service conditions indicated, and as required to attain warranty duration indicated, but no less than 12 wet mils.
   6. Compatible as flashing for single-component, reinforced, modified polyurethane waterproofing.

2.4 ACCESSORIES

A. General: Provide accessories materials recommended in writing by waterproofing manufacturer for intended use and compatible with one another and with waterproofing.

B. Sealant for Joints and Cracks in Substrate: Type compatible with waterproofing material and as recommended by waterproofing manufacturer or as specified in Section 079200 - Joint Sealants

C. Primer: Manufacturer's standard factory-formulated polyurethane or epoxy primer.

D. Other Accessories: Provide other materials, not specifically described, but required for a complete and proper installation, as selected by the Contractor and approve by the membrane system manufacturer as compatible, subject to review of the Architect.

PART 3 EXECUTION

3.1 EXAMINATION

A. Verify that substrate is ready to receive work, surface is clean, dry and free of substances that could adversely effect bond.

B. Verify that concrete has cured and aged for minimum time period recommended in writing by waterproofing manufacturer.

1. Moisture Testing: Test for moisture using the methods indicated below or as recommended by fluid-applied waterproofing manufacturer.
   a. Anhydrous Calcium Chloride Test: ASTM F1869 .
   b. Internal Relative Humidity Test: Using in situ probes, ASTM F2170.
2. Where moisture levels exceed manufacturer's written limitations, implement remedial action(s) recommended by waterproofing manufacturer.
3. Engage waterproofing manufacturer’s technical representative to inspect substrate conditions prior to application of waterproofing membrane. Obtain manufacturer’s written acceptance of substrate conditions and submit to Architect.

C. Verify substrate surfaces are free of frozen matter, dampness, loose particles, cracks, pits, projections, penetrations, or foreign matter detrimental to adhesion or application of waterproofing system.

D. Verify that substrate surfaces are smooth, free of honeycomb or pitting, and not detrimental to full contact bond of waterproofing materials.

E. Verify that items penetrating surfaces to receive waterproofing are securely installed.

F. Where existing conditions are responsibility of another installer, notify Architect of unsatisfactory conditions.

G. Do not proceed with this work until unsatisfactory conditions have been corrected.

3.2 PREPARATION

A. Surface Preparation: Clean, prepare, and treat substrates in accordance with ASTM C1127/C1127M and traffic coating manufacturer's written instructions.

1. Remove contaminants, curing compounds, and film-forming coatings from substrates.
2. Remove projections and excess materials and fill voids with manufacturer's recommended substrate patching material.
3. Mechanically abrade concrete surfaces to a uniform profile in accordance with ASTM D4259 and meeting ICRI Surface Profile CSP 2-4. Do not acid etch.
4. Clean prepared surfaces in accordance with ASTM D4258.

B. Protect adjacent finished surfaces by masking. Mask termination point on vertical surfaces. Protect weep holes and drains.

C. For accessory materials, follow manufacturers application instructions.

3.3 TERMINATIONS AND PENETRATIONS

A. Prepare vertical and horizontal surfaces at horizontal to vertical transitions, terminations, joints, and penetrations through traffic coatings in accordance with ASTM C1127/C1127M and manufacturer's written instructions, using accessory materials specified.

B. Joint Sealant Installation: Comply with ASTM C1193 and manufacturer's written instructions. Allow joint sealants to cure adequately before coating with traffic coating.

1. Provide joint sealant cants with backer rods at penetrations and at horizontal-to-vertical intersections. Tool sealant material to form 45 degree angle transition.

2. Rout and fill cracks with joint sealant and tool flush with surface.
3. Feather edges of joint sealant applications.
4. Allow joint sealant to cure. Apply detail coat of base coat over unfilled and filled cracks and joints, and feather terminating edges.
5. Fill expansion joints less than 1 inch with backer rod and joint sealant. Do not apply traffic coating over expansion joints.
6. Fill expansion joints greater than 1 inch with specified expansion joint material, contact waterproofing manufacturer's representative for sealant recommendation. Do not apply traffic coating over expansion joints.

3.4 INSTALLATION

A. Apply system materials in accordance with manufacturer's instructions.
B. Primer: Prime metal surfaces, porous surfaces (when required), and preceding coats left uncoated for more than 24 hours or that have lost surface tack, with manufacturer's recommended primer. Allow to cure before proceeding.
C. Start traffic-coating application in presence of manufacturer's technical representative.
D. Apply traffic coating according to ASTM C1127/C1127M and manufacturer's written instructions.
   1. Verify that wet film thickness of each coat complies with requirements every 100 square feet.
E. Apply number of coats of specified compositions for vehicular traffic coating at locations indicated on drawings.
   1. Base Coat: Single application of not less than 25 mil.
   2. Intermediate Coat: Single application, roller applied, at not less than 12 mil.
   3. Top Coat: Single application, roller applied, at not less than 12 mil.

3.5 FIELD QUALITY CONTROL

A. Contractor's Inspector: Contractor shall engage a manufacturer’s technical representative for technical assistance and guidance for preparation and application of waterproofing. At a minimum, arrange for manufacturer’s technical representative to observe installation of waterproofing system during mock-up (first 100 square feet of initial installation), at mid-point of the installation, and at completion. Provide additional field observation as required to obtain warranty specified and when requested by Architect or Owner. After each field visit, submit manufacturer’s written report of observations within 3 working days. The report shall note overall quality of work, deficiencies, and any other concerns, and recommend corrective action.
   1. Final Waterproofing Inspection: Arrange for manufacturer’s technical personnel to inspect waterproofing installation upon completion of application, and for those areas that remain visible to view, again at time of project’s overall Substantial Completion.
   2. If test results or inspections show waterproofing does not comply with requirements, remove and replace or repair the waterproofing as recommended in writing by manufacturer, and make further repairs after retesting and inspecting until waterproofing installation passes.
   3. Prepare test and inspection reports.

3.6 PROTECTION

A. Do not permit traffic over unprotected surfaces.
B. Protect waterproofing from damage and wear during remainder of construction period.
C. Protect waterproofing materials from exposure to ultraviolet light for period in excess of that acceptable to waterproofing manufacturer; replace overexposed materials and retest.

END OF SECTION

SECTION 071900 - WATER REPELLENTS

PART 1 GENERAL

1.1 SECTION INCLUDES

A. Water repellents applied to exterior and interior, masonry surfaces.

1.2 REFERENCE STANDARDS

A. ASTM C140/C140M - Standard Test Methods for Sampling and Testing Concrete Masonry Units and Related Units; 2025.
B. ASTM C642 - Standard Test Method for Density, Absorption, and Voids in Hardened Concrete; 2021.
C. ASTM D3960 - Standard Practice for Determining Volatile Organic Compound (VOC) Content of Paints and Related Coatings; 2025.
D. ASTM D5095 - Standard Test Method for Determination of the Nonvolatile Content in Silanes, Siloxanes and Silane-Siloxane Blends Used in Masonry Water Repellent Treatments; 1991 (Reapproved 2022).
E. ASTM E1857 - Standard Guide for Selection of Cleaning Techniques for Masonry, Concrete, and Stucco Surfaces; 97R21.

1.3 ADMINISTRATIVE REQUIREMENTS

A. Preinstallation Meeting: Convene a meeting at least 2 weeks prior to starting work; require attendance of affected installers; invite Architect and Owner.

1.4 SUBMITTALS

A. See Section 013000 - Administrative Requirements for submittal procedures.
B. Product Data: Provide product description, details of tests performed, limitations, chemical composition, and VOC.
C. Manufacturer's Installation Instructions: Indicate special procedures and conditions requiring special attention; cautionary procedures required during application.
D. Manufacturer's Field Reports: Report whether manufacturer's "best practices" are being followed; if not, state corrective recommendations. Email report to Architect the same day as inspection occurs; mail report on manufacturer's letterhead to Architect within 2 days after inspection.
E. Manufacturer's Qualification Statement.
F. Installer's Qualification Statement.

1.5 QUALITY ASSURANCE

A. Manufacturer Qualifications: Company specializing in manufacturing products specified in this section, with not less than 10 years documented experience.
B. Installer Qualifications: Company specializing in performing work of type specified and with at least 5 years of documented experience and approved by manufacturer

1.6 MOCK-UPS

A. Prepare representative surface 60 by 60 inches in size using specified materials and preparation and application methods on surfaces identical to those to be coated; approved mock-up constitutes standard for workmanship.
B. Locate where directed.
C. Mock-up may remain as part of work.

1.7 FIELD CONDITIONS

A. Protect liquid materials from freezing.

B. Limitations: Proceed with application only when the following existing and forecasted weather and substrate conditions permit water repellents to be applied according to manufacturers' written instructions and warranty requirements:
   1. Concrete surfaces and mortar have cured for not less than 28 days.
   2. Building has been closed in for not less than 30 days before treating wall assemblies.
   3. Do not apply water repellent when ambient or surface temperature is lower than 50 degrees F or higher than 100 degrees F.
   4. Rain is not predicted within 24 hours.
   5. Not less than seven days have passed since surfaces were last wet.
   6. Windy conditions do not exist that might cause water repellent to be blown onto vegetation or surfaces not intended to be treated.

1.8 WARRANTY

A. See Section 017800 - Closeout Submittals for additional warranty requirements.
B. Correct defective Work within a 10 year period after Date of Substantial Completion.
C. Provide 10 year manufacturer warranty for failure of water repellency.
   1. Include coverage for degradation of waterproofing ability on designated substrate.

PART 2 PRODUCTS

2.1 MANUFACTURERS

A. Silane, Siloxane, Silane-Siloxane Blend, and Siliconate Water Repellents Basis of Design:
   1. Evonik Corporation; Protectosil AQUA-TRETE CONCENTRATE: www.evonik.com/#sle.

2.2 MATERIALS

A. Water Repellent: Non-glossy, colorless, penetrating, water-vapor-permeable, non-yellowing sealer, that dries invisibly leaving appearance of substrate unchanged.
   1. Applications: Vertical surfaces and non-traffic horizontal surfaces.
   2. VOC Content: Less than 100 g/L, when tested in accordance with ASTM D3960 or ASTM D5095.
   3. Moisture Absorption When Applied to Masonry: 10 percent, maximum, when tested in accordance with ASTM C140/C140M using masonry sample completely coated with water repellent.
   4. Moisture Absorption When Applied to Concrete: Five percent, maximum, when tested in accordance with ASTM C642 concrete sample completely coated with water repellent.
   5. Maintains dry appearance when wetted.
   6. Surface Deterioration / Discoloration: None.
   7. Water-based siloxane, silane, or blend that reacts chemically with concrete and masonry.

PART 3 EXECUTION

3.1 EXAMINATION

A. Verify existing conditions before starting work.
B. Verify joint sealants are installed and cured.
C. Verify surfaces to be coated are dry, clean, and free of efflorescence, oil, or other matter detrimental to application of water repellent, as required by manufacturer's requirements.
D. Inspect for previously applied treatments that may inhibit penetration or performance of water repellents.
E. Verify that there is no efflorescence or other removable residues that would be trapped beneath the application of water repellent.
F. Test pH level according to water-repellent manufacturer's written instructions to ensure chemical bond to silica-containing or siliceous minerals.
G. Proceed with installation only after unsatisfactory conditions have been corrected.

3.2 PREPARATION

A. Protection of Adjacent Work:
   1. Protect adjacent landscaping, property, and vehicles from drips and overspray.
   2. Protect adjacent surfaces not intended to receive water repellent.

B. Prepare surfaces to be coated as recommended by water repellent manufacturer for best results.

C. New Construction and Repairs: Allow concrete and other cementitious materials to age before application of water repellent, according to repellent manufacturer's written instructions.

D. Cast-in-Place Concrete and Concrete Unit Masonry: Remove oil, curing compounds, laitance, and other substances that inhibit penetration or performance of water repellents according to ASTM E1857.

E. Coordination with Mortar Joints: Do not apply water repellent until pointing mortar for joints adjacent to surfaces receiving water-repellent treatment has been installed and cured.

F. Coordination with Sealant Joints: Do not apply water repellent until sealants for joints adjacent to surfaces receiving water-repellent treatment have been installed and cured.
   1. Water-repellent work may precede sealant application only if sealant adhesion and compatibility have been tested and verified using substrate, water repellent, and sealant materials identical to those required.

3.3 APPLICATION

A. Apply water repellent in accordance with manufacturer's instructions, using procedures and application methods recommended as producing the best results.

B. Apply at rate recommended by manufacturer, continuously over entire surface.

C. Apply two coats, minimum.

D. Remove water repellent from unintended surfaces immediately by a method instructed by water repellent manufacturer.

E. Provide manufacturer's field service representative to inspect preparation and application work continuously during entire application period to ensure that the manufacturer's preparation and application requirements are being followed.

3.4 FIELD QUALITY CONTROL

A. Testing of Water-Repellent Material: Owner reserves the right to invoke the following procedure at any time and as often as Owner deems necessary during the period when water repellent is being applied:
   1. Owner may engage the services of a qualified testing agency to sample water-repellent material being used. Samples of material delivered to Project site will be taken, identified, sealed, and certified in presence of Contractor.
   2. Testing agency will perform tests for compliance of water-repellent material with product requirements.
   3. Owner may direct Contractor to stop applying water repellents if test results show material being used does not comply with product requirements. Contractor shall remove noncomplying material from Project site, pay for testing, and correct deficiency of surfaces treated with rejected materials, as approved by Architect.

B. Coverage Test: In the presence of Architect, hose down a dry, repellent-treated surface to verify complete and uniform product application. A change in surface color will indicate incomplete application.
   1. Notify Architect 7 days in advance of the dates and times when surfaces will be tested.
   2. Reapply water repellent until coverage test indicates complete coverage.

3.5 CLEANING

A. Immediately clean water repellent from adjoining surfaces and surfaces soiled or damaged by water-repellent application as work progresses. Correct damage to work of other trades caused by water-repellent application, as approved by Architect.

B. Comply with manufacturer's written cleaning instructions.

END OF SECTION

SECTION 075400 - THERMOPLASTIC MEMBRANE ROOFING

PART 1 GENERAL

1.1 SECTION INCLUDES

A. Adhered system with thermoplastic roofing membrane - Thermoplastic polyolefin (TPO).
B. Insulation, flat and tapered.
C. Vapor retarder.
D. Deck sheathing.
E. Cover boards.
F. Flashings.
G. Roofing walkway pads.

1.2 RELATED REQUIREMENTS

A. Section 076200 - Sheet Metal Flashing and Trim: Metal roof flashings and counterflashings.
B. Section 079200 - Joint Sealants: Joint sealants, joint fillers, and joint preparation.
C. Division 22 for roof drains.

1.3 REFERENCE STANDARDS

A. ASTM C1177/C1177M - Standard Specification for Glass Mat Gypsum Substrate for Use as Sheathing; 2024.
B. ASTM C1289 - Standard Specification for Faced Rigid Cellular Polyisocyanurate Thermal Insulation Board; 2025.
C. ASTM D6878/D6878M - Standard Specification for Thermoplastic Polyolefin-Based Sheet Roofing; 2021.
D. NRCA (RM) - The NRCA Roofing Manual; 2025.
E. NRCA (WM) - The NRCA Waterproofing Manual; 2021.
F. UL (FRD) - Fire Resistance Directory; Current Edition.

1.4 ADMINISTRATIVE REQUIREMENTS

A. Preinstallation Meeting: Convene 4 weeks before starting work of this section.
   1. Review preparation and installation procedures and coordinating and scheduling required with related work.
   2. Review roofing requirements, including, but not limited to, the following:
      a. Methods and procedures related to roofing installation, including manufacturer's written instructions.
      b. Finalize construction schedule, and verify availability of materials, Installer's personnel, equipment, and facilities needed to make progress and avoid delays.
      c. Deck substrate requirements for conditions and finishes, including flatness and fastening.
      d. Structural loading limitations of roof deck during and after roofing.
      e. Base flashings, special roofing details, roof drainage, roof penetrations, equipment curbs, and condition of other construction that affects roofing system.
      f. Governing regulations and requirements for insurance and certificates if applicable.
      g. Temporary protection requirements for roofing system during and after installation.
      h. Roof observation and repair procedures after roofing installation.
   3. Contractor shall prepare minutes of preinstallation conference and distribute to participants.

1.5 SUBMITTALS

A. See Section 013000 - Administrative Requirements for submittal procedures.
B. Letter from manufacturer and installer indicating acceptance of substrate surface prior to installation of roofing system.

C. Product Data: Provide data indicating membrane materials, flashing materials, insulation, vapor retarder, surfacing, and fasteners.

D. Shop Drawings: Submit drawings that indicate joint or termination detail conditions, conditions of interface with other materials, and setting plan for tapered insulation.

E. Sample for Verification:

1. Sheet roofing, of color required.
2. Walkway pads or rolls, of color required.
3. Roof insulation.
4. Cover board.
5. Membrane and Insulation fasteners.

F. Wind Uplift Resistance Submittal: For roofing system, indicating compliance with wind uplift performance requirements.

G. Manufacturer's Certificate: Certify that products meet or exceed specified requirements.

1. Submit evidence of compliance with performance requirements.

H. Manufacturer's Special Warranty Certificate: Signed by roof membrane manufacturer, certifying that all materials supplied under this Section are acceptable for special warranty.

I. Manufacturer's Installation Instructions: Indicate membrane seaming precautions and perimeter conditions requiring special attention.

J. Manufacturer's Field Reports: Indicate procedures followed, ambient temperatures, humidity, wind velocity during application, and supplementary instructions given.

K. Manufacturer's qualification statement.

L. Installer's qualification statement.

M. Testing firm's qualification statement.

N. Product Test Reports: For components of roofing system, for tests performed by manufacturer and witnessed by a qualified testing agency.

1. Test reports shall be preferably less than 5 years old, and shall not exceed 10 years old.

O. Research/Evaluation Reports: For components of roofing system, from ICC ES or equivalent testing agency acceptable to authorities having jurisdiction.

P. Field quality-control reports.

Q. Sample Warranties: For manufacturer's special warranties.

R. Warranty Documentation:

1. Submit manufacturer warranty and ensure that forms have been completed in Owner's name and registered with manufacturer.
2. Submit installer's written verification that installation complies with warranty conditions for waterproof membrane.

1.6 QUALITY ASSURANCE

A. Manufacturer Qualifications: Company specializing in manufacturing products specified in this section with minimum 10 years of documented experience. Manufacturer shall have factory-authorized service representatives who are available for consultation, periodic project-site observations, and on-site assistance. Manufacturer shall be UL listed roofing systems.

B. Installer Qualifications: Company specializing in performing work of this section with at least 10 years of documented experience. Employs installers and supervisors who are trained and approved by manufacturer to perform work of this section. Installer shall be licensed and eligible to receive manufacturer’s special warranty.

1.7 DELIVERY, STORAGE, AND HANDLING

A. Deliver materials in manufacturer's original containers, dry and undamaged, with seals and labels intact, unless otherwise indicated.

B. Store materials in weather protected environment, clear of ground and moisture.

C. Ensure storage and staging of materials does not exceed static and dynamic load-bearing capacities of roof decking.

D. Protect foam insulation from direct exposure to sunlight.

E. Insulation must be on pallets, off the ground and tightly covered with a waterproof material.

F. Handle and store roofing materials, and place equipment in a manner to avoid permanent deflection.

1.8 FIELD CONDITIONS

A. Do not apply roofing membrane during unsuitable weather.
B. Do not apply roofing membrane to damp or frozen deck surface or when precipitation is expected or occurring.
C. Do not expose materials vulnerable to water or sun damage in quantities greater than can be weatherproofed the same day.
D. Schedule applications so that no partially completed sections of roof are left exposed at end of workday.

1.9 WARRANTY

A. See Section 017800 - Closeout Submittals for additional warranty requirements.
B. System Warranty: Provide manufacturer's system warranty agreeing to repair or replace roofing that leaks or is damaged due to wind or other natural causes. Warranty shall not exclude the condition of ponding water and no time limit shall be assigned to any such ponding water during the warranty period. Warranty shall provide for maximum wind speed as indicated on the Structural Drawings.
    1. Warranty Term: 20 years, No Dollar Limit, from date of Substantial Completion.
    2. Special warranty includes membrane roofing, flashings, roof insulation, fasteners, substrate boards, cover boards, vapor retarders, drainage boards, roofing accessories, and other components of membrane roofing system.
    3. For repair and replacement include costs of both material and labor in warranty.
    4. Exceptions are not Permitted:
        a. Damage due to roof traffic.
        b. Damage due to wind speed greater than 56 miles per hour but less than 90 miles per hour.

PART 2 PRODUCTS

2.1 MANUFACTURERS

A. Source Limitations: Obtain components including roof membrane, insulation, fasteners, adhesives, cover and barrier boards for roofing system from same manufacturer as membrane roofing.
B. Material Compatibility: Roofing materials shall be compatible with one another and adjacent materials under conditions of service and application required, as demonstrated by roofing manufacturer based on testing and field experience.
C. Thermoplastic Polyolefin (TPO) Membrane Roofing Basis of Design Material:
    1. Carlisle SynTec Systems; Sure-Weld SAT TPO: www.carlisle-syntec.com/#sle.
    2. Or Equal.
D. Basis of Design Insulation:
    1. Carlisle SynTec Systems; SecurShield Insulation: www.carlisle-syntec.com/#sle.
    2. Or Equal.

2.2 ROOFING

A. Thermoplastic Membrane Roofing: One ply membrane, fully adhered, over insulation.
B. Roofing Assembly Requirements:
    1. Sustainable Design Requirements (California Energy Code)
    2. Roof Covering External Fire Resistance Classification: UL (FRD) Class A.
    3. Wind Uplift Performance: Tested by a qualified testing agency to resist the following uplift pressures:
        a. Design Pressure: Per the California Building Code based upon maximum wind speed criteria indicated on the Structural Drawings.
C. Acceptable Insulation Types:
    1. Minimum 2 layers of polyisocyanurate board.

2.3 MEMBRANE ROOFING AND ASSOCIATED MATERIALS

A. Membrane Roofing Materials:
   1. TPO: Thermoplastic polyolefin (TPO) complying with ASTM D6878/D6878M, sheet contains reinforcing fabrics or scrims.
      a. Thickness: 60 mil, 0.060 inch, minimum.
   2. Sheet Width: Factory fabricated into widest possible sheets.
   3. Solar Reflectance: 0.75, minimum, initial, and 0.65, minimum, 3 year, certified by Cool Roof Rating Council.
   4. Thermal Emissivity: 0.80, minimum, initial, and 0.79, minimum, 3 year, certified by Cool Roof Rating Council.
   5. Color: White.

B. Seaming Materials: As recommended by membrane manufacturer.

C. Membrane Fasteners: As recommended and approved by membrane manufacturer.

D. Self-Adhering-Sheet Vapor Retarder: Material approved by roof manufacturer; compatible with roofing and insulation materials. Minimum 40 mil thickness; maximum permeance rating of 0.1 perm; with slip-resisting surface and release backing.
   1. Basis of Design Product:
      a. Carlisle VapAir Seal 725TR Air/Vapor Barrier
      b. Or Equal.

E. Slip Sheet: Manufacturer's standard, of thickness required for application.

F. Flexible Flashing Material: Same material as membrane.

2.4 DECK SHEATHING

A. Deck Sheathing: Glass-mat faced gypsum panels complying with ASTM C1177/C1177M, fire-tested.
   1. Thickness: 1/2 inch, minimum.
   2. Source Limitation: Cover boards shall be provided and warranted by the primary roofing manufacturer.
   3. Fasteners: Factory-coated steel fasteners and metal or plastic plates complying with corrosion-resistance provisions in FM Approvals 4470, designed for fastening substrate board to roof deck.
   4. Basis of Design Products:
      a. Georgia-Pacific; DensDeck: www.densdeck.com/#sle.
      b. USG Corporation; Securock Ultralight Glass-Mat Roof Board: www.usg.com/#sle.

2.5 COVER BOARDS

A. Cover Boards: Glass-mat faced gypsum panels complying with ASTM C1177/C1177M.
   1. Thickness: 1/2 inch, minimum.
   2. Source Limitation: Cover boards shall be provided and warranted by the primary roofing manufacturer.
   3. Adhesive: Roofing manufacturer’s recommended full-spread or ribbon applied low rise urethane adhesive formulated to attached cover boards to insulation.

2.6 INSULATION

A. Polyisocyanurate (ISO) Board Insulation: Rigid cellular foam, complying with ASTM C1289.
   1. Classifications:
      a. Type II: Faced with either cellulosic facers or glass fiber mat facers on both major surfaces of the core foam.
         1) Class 2 - Faced with coated glass fiber mat facers on both major surfaces of the core foam.
         2) Compressive Strength: Classes 1-2-3, Grade 3, 25 psi (172 kPa), minimum.
         3) Thermal Resistance, R-value: At 1-1/2 inches thick; Class 1, Grades 1-2-3, 8.4 (1.48), minimum, at 75 degrees F.
   2. Board Size: 48 by 48 inches.
   3. Board Thickness: As indicated on drawings to achieve required R value.

4. Basis of Design Product:
   a. Carlisle SecurShield.
   b. Or Equal.
5. Provide preformed saddles, crickets, tapered edge strips, and other insulation shapes where indicated for sloping to drain. Fabricate to slopes indicated.
6. Roof insulation accessories recommended by insulation manufacturer for intended use and compatibility with roofing.
7. Insulation Adhesive: Roofing manufacturer's recommended full-spread or ribbon applied low-rise urethane adhesive formulated to attach roof insulation to substrate or to another insulation layer, and complying with sustainable design performance requirements.h

2.7 ACCESSORIES

A. General: Auxiliary materials recommended by roofing system manufacturer for intended use and compatible with roofing.
B. Prefabricated Pipe Flashings: As recommended by roof membrane manufacturer.
C. Metal Termination Bars: Manufacturer's standard, predrilled stainless-steel bars, approximately 1 inch by 1/8 inch thick; with anchors.
D. Metal Battens: Manufacturer's standard, aluminum-zinc-alloy-coated or zinc-coated steel sheet, approximately 1 inch wide by 0.05 inch thick, prepunched.
E. Miscellaneous Accessories: Provide pourable sealers, preformed cone and vent sheet flashings, preformed inside and outside corner sheet flashings, T-joint covers, lap sealants, termination reglets, and other accessories.
   1. Pitch pans are not acceptable for use as penetration flashings for this Project.
F. Separator felts where required to separate roofing membrane from contact with asphalt, petroleum based products, and/or other incompatible building materials.
G. Insulation Fasteners: Appropriate for purpose intended and approved by roofing manufacturer.
H. Membrane Adhesive: As recommended by membrane manufacturer.
I. Surface Conditioner for Adhesives: Compatible with membrane and adhesives.
J. Thinners and Cleaners: As recommended by adhesive manufacturer, compatible with membrane.
K. Insulation Adhesive: As recommended by insulation manufacturer.
L. Sealants: As recommended by membrane manufacturer.
M. Walkway Pads: Suitable for heavy-duty maintenance traffic, visually distinctive from roof membrane. Fully adhered.
   1. Composition: Roofing membrane manufacturer's standard.
   2. Surface Color: Standard as provided by manufacturer.

PART 3 EXECUTION

3.1 EXAMINATION

A. Examine substrates, areas, and conditions, with Installer present, for compliance with requirements and other conditions affecting performance of the Work.
B. Verify that surfaces and site conditions are ready to receive work.
C. Verify deck is supported and secure.
D. Verify deck is clean and smooth, flat, free of depressions, waves, or projections, properly sloped and suitable for installation of roof system.
E. Verify deck surfaces are dry and free of snow or ice.
F. Verify that roof openings, curbs, and penetrations through roof are solidly set, and nailing strips are in place.
G. Verify that curbs, pipes, conduits, and other roof penetrations are of adequate height to allow a minimum 8 inches of flashing height.
H. Prior to installation of vapor retarder, verify that steel deck and substrate boards are not damaged, substrate tolerance comply with manufacturer’s written requirements, and substrates are suitable to receive vapor retarder.

I. Examine stored materials before installation. Reject materials that are wet, moisture damaged, and/or mold damaged.

3.2 PREPARATION - METAL DECK

A. Install deck sheathing on metal deck:
   1. Lay with long side at right angle to flutes; stagger end joints; provide support at ends.
   2. Cut sheathing cleanly and accurately at roof breaks and protrusions to provide smooth surface.
   3. Fit tight and tape joints.
   4. Fasten substrate board to top flanges of steel deck to resist uplift pressure at corners, perimeter, and field of roof complying with specified performance requirements, according to roofing system manufacturers' written instructions, and in accordance with manufacturer's evaluation report / test reports.

3.3 INSTALLATION, GENERAL

A. Perform work in accordance with manufacturer's instructions, NRCA (RM), and NRCA (WM) applicable requirements.
B. Do not apply roofing membrane during cold or wet weather conditions.
C. Do not apply roofing membrane when ambient temperature is outside the temperature range recommended by manufacturer.
D. Do not apply roofing membrane to damp or frozen deck surface or when precipitation is expected or occurring.
E. Do not expose materials vulnerable to water or sun damage in quantities greater than can be weatherproofed the same day.

3.4 INSTALLATION - INSULATION, UNDER MEMBRANE

A. Install vapor retarder to deck surface with adhesive in accordance with manufacturer's instructions.
   1. Install flexible flashing from vapor retarder to air seal material of wall construction, lap and seal to provide continuity of the air barrier plane.
   2. Prior to covering vapor retarder, inspect the surface for damage. Repair all damage
B. Ensure vapor retarder is clean and dry, continuous, and ready for application of insulation.
C. Attachment of Insulation: Embed insulation in adhesive in full contact, in accordance with roofing and insulation manufacturers' instructions.
   1. At internal roof drains, slope insulation to create a square drain sump with each side equal to the diameter of the drain bowl plus 24 inches.
   2. Fill all gaps exceeding 1/4 inch with insulation.
   3. Install upper layers of insulation and tapered insulation with joints of each layer offset not less than 12 inches from previous layer of insulation.
D. Cover Boards: Mechanically fasten cover boards in accordance with roofing manufacturer's instructions.
   1. Offset joints of insulation below a minimum of 6 inches in each direction.
E. Place tapered insulation to the required slope pattern in accordance with manufacturer's instructions.
F. On metal deck, place boards parallel to flutes with insulation board edges bearing on deck flutes.
G. Lay boards with edges in moderate contact without forcing. Cut insulation to fit neatly to perimeter blocking and around penetrations through roof.
H. Do not install more insulation than can be covered with membrane in same day.

3.5 INSTALLATION - MEMBRANE

A. Roll out membrane, free from wrinkles or tears. Place sheet into place without stretching.
B. Unroll roofing and allow to relax before retaining.
C. Shingle joints on sloped substrate in direction of drainage.
D. Fully Adhered Application: Apply adhesive to substrate at rate in accordance with manufacturer's instructions. Fully embed membrane in adhesive except in areas directly over or within 3 inches of expansion joints. Fully adhere one roll before proceeding to adjacent rolls.
E. Weld all side and end laps as required by membrane manufacturer. Probe all laps to confirm proper weld.

F. At intersections with vertical surfaces:
   1. Fully adhere flexible flashing over membrane and up to nailing strips.
G. Around roof penetrations, seal flanges and flashings with flexible flashing.
H. Coordinate installation of roof drains and sumps and related flashings.

3.6 INSTALLATION - BASE FLASHING

A. Install sheet flashings and preformed flashing accessories, and adhere to substrates according to roofing system manufacturer's written instructions.
B. Flash penetrations and field-formed inside and outside corners with cured or uncured sheet flashing.
   1. Use prefabricated membrane boots to the greatest extent possible, with field-wrapped flashings only as a last option when no other flashing is adequate.
C. Terminate and seal top of sheet flashings and mechanically anchor to substrate at 12 inches on center maximum through termination bars.
D. Coordinate flashing installation with adjoining air/weather barrier, sealant, etc. to ensure that system is fully and continuously air and water tight.

3.7 INSTALLATION - WALKWAYS

A. Flexible Walkways: Install walkway products according to manufacturer's written instructions.
   1. Install flexible walkways at the following locations:
      a. Perimeter of each rooftop unit.
      b. Between each rooftop unit location, creating a continuous path connecting rooftop unit locations.
      c. Between each roof hatch and each rooftop unit location or path connecting rooftop unit locations.
      d. Top and bottom of each roof access ladder.
      e. Between each roof access ladder and each rooftop unit location or path connecting rooftop unit locations.
      f. Locations indicated on drawings.
      g. As required by roof membrane manufacturer's warranty requirements.
B. Provide 6 inch clearance between adjoining pads.
C. Do not install walkways over laps or in a manner or location that will impede drainage.

3.8 FIELD QUALITY CONTROL

A. See Section 014000 - Quality Requirements for additional requirements.
B. Manufacturer's Field Services: Manufacturer's technical representative shall provide technical assistance and guidance for preparation and application of roofing system. At a minimum, arrange for manufacturer's technical representative to observe roofing system during mockup, first 20 squares of membrane and flashing installation, at mid-point of the installation, and at completion. Provide additional field observations as required to obtain warranty specified and when requested by Architect or Construction Manager. After each field visit, submit manufacturer's written report of observations within 3 working days. The report shall note overall quality of work, deficiencies, any other concerns, and recommended corrective action.
C. Final Roof Inspection: Arrange for roofing system manufacturer's technical personnel to inspect roofing installation on completion.
D. Roof Drain Test: After completing roofing, but prior to Substantial Completion, perform the following test for watertightness. Plug roof drains and fill with water to edge of drain sump for 8 hours. Do not plug secondary overflow drains at the same time as adjacent primary drain. To ensure some drainage from roof, do not test all drains at the same time. Measure water at beginning and end of the test period. When precipitation occurs during test period, repeat test. When water level falls, remove water, thoroughly dry, and inspect installation; repair or replace roofing at drain to provide for a properly installed watertight flashing seal. Repeat test until there is no water leakage.
   1. When testing overflow drains, confirm overflow drains are operating as intended.
   2. Owner will engage an independent testing agency to observe roof drain test and examine underside of decks and terminations for evidence of leaks during roof drain testing.
E. Repair or remove and replace components of roofing system where inspections indicate that they do not comply with specified requirements.

F. Additional testing and inspecting, at Contractor's expense, will be performed to determine if replaced or additional work complies with specified requirements.

3.9 CLEANING

A. See Section 017000 - Execution and Closeout Requirements for additional requirements.
B. Remove bituminous markings from finished surfaces.
C. In areas where finished surfaces are soiled by work of this section, consult manufacturer of surfaces for cleaning advice and comply with their documented instructions.
D. Repair or replace defaced or damaged finishes caused by work of this section.
E. Clean overspray and spillage from adjacent construction using cleaning agents and procedures recommended by manufacturer of affected construction.

3.10 PROTECTION

A. Protect installed roofing and flashings from construction operations.
B. Where traffic must continue over finished roof membrane, protect surfaces using durable materials. If areas if roofing are damaged despite protection, identify and mark damaged areas for temporary and permanent repair.
C. Correct deficiencies in or remove roofing system that does not comply with requirements, repair substrates, and repair or reinstall roofing system to a condition free of damage and deterioration at time of Substantial Completion and according to warranty requirements.

END OF SECTION

SECTION 076200 - SHEET METAL FLASHING AND TRIM

PART 1 GENERAL

1.1 SECTION INCLUDES

A. Fabricated sheet metal items, including flashings, counterflashings, downspouts, exterior penetrations, and equipment support.
B. Sealants for joints within sheet metal fabrications.
C. Precast concrete splash pads.

1.2 RELATED REQUIREMENTS

A. Section 075400 - Thermoplastic Membrane Roofing
B. Section 077100 - Roof Specialties: Roofing manufacturer's coping.
C. Section 079200 - Joint Sealants

1.3 REFERENCE STANDARDS

A. AAMA 2605 - Voluntary Specification, Performance Requirements and Test Procedures for Superior Performing Organic Coatings on Aluminum Extrusions and Panels (with Coil Coating Appendix); 2022.
B. ANSI/SPRI/FM 4435/ES-1 - Test Standard for Edge Systems Used with Low Slope Roofing Systems; 2022.
C. ASTM A240/A240M - Standard Specification for Chromium and Chromium-Nickel Stainless Steel Plate, Sheet, and Strip for Pressure Vessels and for General Applications; 2025a.
D. ASTM A653/A653M - Standard Specification for Steel Sheet, Zinc-Coated (Galvanized) or Zinc-Iron Alloy-Coated (Galvannealed) by the Hot-Dip Process; 2025.
E. ASTM B32 - Standard Specification for Solder Metal; 2020.
F. ASTM B209/B209M - Standard Specification for Aluminum and Aluminum-Alloy Sheet and Plate; 2021a.
G. ASTM C920 - Standard Specification for Elastomeric Joint Sealants; 2018 (Reapproved 2024).
H. ASTM C1311 - Standard Specification for Solvent Release Sealants; 2022.
I. ASTM D226/D226M - Standard Specification for Asphalt-Saturated Organic Felt Used in Roofing and Waterproofing; 2025.
J. ASTM D1187/D1187M - Standard Specification for Asphalt-Base Emulsions for Use as Protective Coatings for Metal; 1997 (Reapproved 2024).
K. ASTM D2244 - Standard Practice for Calculation of Color Tolerances and Color Differences from Instrumentally Measured Color Coordinates; 2025.
L. ASTM D4214 - Standard Test Methods for Evaluating the Degree of Chalking of Exterior Paint Films; 2023.
M. ASTM D4586/D4586M - Standard Specification for Asphalt Roof Cement, Asbestos-Free; 2007 (Reapproved 2024).
N. CDA A4050 - Copper in Architecture - Handbook; Current Edition.
O. NRCA (RM) - The NRCA Roofing Manual; 2025.
P. SMACNA (ASMM) - Architectural Sheet Metal Manual; 2012.

1.4 ADMINISTRATIVE REQUIREMENTS

A. Preinstallation Meeting: Convene 2 weeks minimum before starting work of this section, at Project site
   1. Meet with Owner, General Contractor, Architect, sheet metal foreman and other adjoining trades and conduct a building envelope coordination meeting.
   2. Review the following:
      a. Construction schedule.
      b. Verify availability of materials, Installer’s personnel, equipment, and facilities needed to make progress and avoid delays.
      c. Special roof details, roof drainage, roof penetration flashing, equipment curbs, and condition of other construction that affect sheet metal flashing and trim.

d. Approved sheet metal submittals and Shop Drawings.
e. Requirements for insurance and certificates if applicable.
f. Sheet metal flashing observation and repair procedures after flashing installation.

3. Prepare minutes of preinstallation conference and distribute to participants.

B. Coordination

1. Coordinate sheet metal flashing and trim layout and seams with sizes and location of penetrations to be flashed, and joints and seams in adjacent materials.
2. Coordinate sheet metal flashing and trim installation with adjoining roofing and wall materials, joints, and seams to provide leakproof, secure, noncorrosive, and warrantable (where part of another warrantied system) installation.

1.5 SUBMITTALS

A. See Section 013000 - Administrative Requirements for submittal procedures.
B. Shop Drawings: Indicate material profile, jointing pattern, jointing details, fastening methods, flashings, terminations, and installation details.

1. Include plans, elevations, sections, and attachment details.
2. Detail fabrication and installation layouts, expansion joint locations, and keyed details. Distinguish between shop- and field-assembled work.
3. Detail formed flashing and trim at a scale of not less than 3 inches per foot.

C. Samples: For each type of exposed finish required, prepared on Samples of size indicated below:

1. Sheet Metal Flashing: 12 inches long by actual width of unit, including finished seam and in required profile. Include fasteners, cleats, clips, closures, and other attachments.
2. Trim, Metal Closures, Expansion Joints, Joint Intersections, and Miscellaneous Fabrications: 12 inches long and in required profile. Include fasteners and other exposed accessories.
3. Accessories and Miscellaneous Materials: Full-size Sample.

D. Qualification Data: For fabricator.
E. Product Certificates: For each type of roof edge flashing that is ANSI/SPRI/FM 4435/ES-1 tested as part of roof edge securement.
F. Sample Warranty: For special warranty.
G. Maintenance Data: For sheet metal flashing, trim, and accessories to include in maintenance manuals.

1.6 QUALITY ASSURANCE

A. Perform work in accordance with SMACNA (ASMM) and CDA A4050 requirements and standard details, except as otherwise indicated.
B. Fabricator and Installer Qualifications: Company specializing in sheet metal work with 10 years of documented experience.

1. For roof edge flashings that are ANSI/SPRI/FM 4435/ES-1 tested, shop shall be listed as able to fabricate required details as tested and approved.

1.7 MOCKUPS

A. Build mockups to verify selections made under Sample submittals, to demonstrate aesthetic effects, and to set quality standards for fabrication and installation.

1. Description: Incorporate sheet metal flashing and trim into mockups specified in other Sections.
2. Testing shall be performed on mockups according to requirements specified in other Sections.
3. Approval of mockups does not constitute approval of deviations from the Contract Documents contained in mockups unless Architect specifically approves such deviations in writing.
4. Subject to compliance with requirements, approved mockups may become part of the completed Work if undisturbed at time of Substantial Completion.

1.8 DELIVERY, STORAGE, AND HANDLING

A. See Section 017419 - Construction Waste Management and Disposal for packaging waste requirements.
B. Stack material to prevent twisting, bending, and abrasion, and to provide ventilation. Slope metal sheets to ensure drainage.

C. Prevent contact with materials that could cause discoloration or staining. Protect strippable protective covering on sheet metal flashing and trim from exposure to sunlight and high humidity, except to the extent necessary for the period of sheet metal flashing and trim installation.

D. Protect strippable protective covering on sheet metal flashing and trim from exposure to sunlight and high humidity, except to the extent necessary for the period of sheet metal flashing and trim installation.

1.9 WARRANTY

A. Special Warranty on Finishes: Manufacturer's standard form in which manufacturer agrees to repair finish or replace sheet metal flashing and trim that shows evidence of deterioration of factory-applied finishes within specified warranty period.

1. Deterioration includes, but is not limited to, the following:

a. Color fading more than 5 Hunter units when tested according to ASTM D2244.

b. Chalking in excess of a No. 8 rating when tested according to ASTM D4214.

c. Cracking, checking, peeling, or failure of paint to adhere to bare metal.

2. Warranty Period: 10 years from date of Substantial Completion.

PART 2 PRODUCTS

2.1 PERFORMANCE REQUIREMENTS

A. Sheet metal flashing and trim assemblies shall withstand wind loads, structural movement, thermally induced movement, and exposure to weather without failure due to defective manufacture, fabrication, installation, or other defects in construction. Completed sheet metal flashing and trim shall not rattle, leak, or loosen, and shall remain watertight and prevent water intrusion into building interior.

B. Sheet Metal Standard for Flashing and Trim: Comply with NRCA (RM) The NRCA Roofing Manual and SMACNA (ASMM) Architectural Sheet Metal Manual requirements for dimensions and profiles shown unless more stringent requirements are indicated.

C. SPRI Wind Design Standard: Where part of roof edge securement, manufacture and install sheet metal flashing and trim tested according to ANSI/SPRI/FM 4435/ES-1 and capable of resisting the following design pressures:

1. Design Pressure: Per the California Building Code based upon maximum wind speed criteria indicated on the structural drawings.

D. Thermal Movements: Provide sheet metal flashing and trim that allows for thermal movements from ambient and surface temperature changes.

1. Temperature Change (Range): 120 degrees F, ambient; 180 degrees F material surfaces.

2.2 SHEET MATERIALS

A. Protect mechanical and other finishes on exposed surfaces from damage by applying a strippable, temporary protective film before shipping.

B. Sheet Metal Selection: Provide sheet metals as indicated on drawings and as specified. Where not indicated on Drawings, select sheet metal based on the performance requirements and limitations specified herein.

C. Galvanized Steel: ASTM A653/A653M, with G90/Z275 zinc coating; minimum 24-gauge, 0.0239-inch thick base metal.

1. Surface: Smooth, flat.

2. Galvanized sheet steel shall be limited to rooftop applications only, and that are not visible from any vantage point on the site, nor visible from any vantage point from within the building.

3. Galvanized sheet steel shall not be installed:

a. In locations subject to contact with concrete.

b. In locations subject to contact with soil.

c. In any below-grade conditions.

D. Pre-Finished Aluminum: ASTM B209/B209M, 3005 alloy, H12 or H14 temper; 18 gauge, 0.040 inch thick; plain finish shop pre-coated with silicone modified polyester coating.

1. Polyvinylidene Fluoride (PVDF) Coating: Superior performing organic powder coating, AAMA 2605; pretreated metal with two-coat system including primer and color coat with at least 70 percent PVDF coating.
2. Color: As indicated on drawings
3. Color: As selected by Architect from manufacturer's standard colors.
4. Aluminum flashing shall be used in areas exposed to view, but shall not be used in any below-grade applications, nor shall it be used in any locations subject to contact with cast-in-place concrete surfaces.

E. Stainless-Steel Sheet: ASTM A240/A240M, dead soft, fully annealed with smooth, flat surface.
1. Type and Finish:
a. Exposed to View: Type 316, No. 4 (polished directional satin) finish.
b. Concealed From View: Type 304, No. 2B or 2D finish,
2. Stainless steel sheet shall be used in concealed applications, in below-grade conditions, and in areas subject to contact with cast-in-place concrete.

2.3 UNDERLAYMENT MATERIALS

A. In Conjunction with Roofing: As specified in Section 075400 - Thermoplastic Membrane Roofing.
B. In Conjunction with Waterproofing: As specified in Section 071300 - Sheet Waterproofing and / or071400 - Fluid-Applied Waterproofing.

2.4 MISCELLANEOUS MATERIALS

A. Provide materials and types of fasteners, solder, protective coatings, separators, sealants, and other miscellaneous items as required for complete sheet metal flashing and trim installation and recommended by manufacturer of primary sheet metal unless otherwise indicated.
B. Fasteners: Screws, annular threaded nails, self-tapping screws, self-locking rivets and bolts, and other suitable fasteners designed to withstand design loads and recommended by manufacturer of primary sheet metal.
1. General: Blind fasteners or self-drilling screws, gasketed, with hex-washer head.
a. Exposed Fasteners: Heads matching color of sheet metal using plastic caps or factory-applied coating.
b. Blind Fasteners: High-strength aluminum or stainless-steel rivets suitable for metal being fastened.
2. Fasteners for Aluminum Sheet: Aluminum or Series 300 stainless steel.
3. Fasteners for Stainless-Steel Sheet: Series 300 stainless steel.
C. Solder: Provide soldered metal flashing at all pan-type flashing applications and non-moving seams required to be watertight.
1. For Stainless Steel: ASTM B32, Grade Sn60, with an acid flux of type recommended by stainless-steel sheet manufacturer.
2. Fabricate from the following materials:
a. Aluminum: 0.050 inch thick.
D. Sealant Tape: Pressure-sensitive, 100 percent solids, gray polyisobutylene compound sealant tape with release-paper backing. Provide permanently elastic, nonsag, nontoxic, nonstaining tape 1/2 inch wide and 1/8 inch thick.
E. Elastomeric Sealant: ASTM C920, elastomeric polymer sealant; low modulus; of type, grade, class, and use classifications required to seal joints in sheet metal flashing and trim and remain watertight.
F. Butyl Sealant: ASTM C1311, single-component, solvent-release butyl rubber sealant; polyisobutylene plasticized; heavy bodied for hooked-type expansion joints with limited movement. Butyl sealant shall be limited to concealed joints only.
G. Epoxy Seam Sealer: Two-part, noncorrosive, aluminum seam-cementing compound, recommended by aluminum manufacturer for exterior nonmoving joints, including riveted joints.
H. Bituminous Coating: Cold-applied asphalt emulsion complying with ASTM D1187/D1187M.
I. Other Accessories: Provide other materials, not specifically described, but required for a complete and proper installation, as selected by the Contractor and approved by the membrane system manufacturer as compatible, subject to review of the Architect.

2.5 FABRICATION, GENERAL

A. Custom fabricate sheet metal flashing and trim to comply with recommendations in SMACNA (ASMM) Architectural Sheet Metal Manual that apply to design, dimensions, geometry, metal thickness, and other characteristics of item indicated.
   1. Fabricate sheet metal flashing and trim in shop to greatest extent possible.
   2. Fabricate sheet metal flashing and trim in thickness or weight needed to comply with performance requirements, but not less than that specified for each application and metal.
   3. Verify shapes and dimensions of surfaces to be covered and obtain field measurements for accurate fit before shop fabrication.
   4. Form sheet metal flashing and trim to fit substrates without excessive oil-canning, buckling, and tool marks; true to line, levels, and slopes; and with exposed edges folded back to form hems.
   5. Conceal fasteners and expansion provisions where possible. Do not use exposed fasteners on faces exposed to view.

B. Fabrication Tolerances:
   1. Fabricate sheet metal flashing and trim that is capable of installation to a tolerance of 1/4 inch in 20 feet on slope and location lines indicated on drawings and within 1/8 inch offset of adjoining faces and of alignment of matching profiles.
   2. Fabricate sheet metal flashing and trim that is capable of installation to tolerances specified.

C. Expansion Provisions: Form metal for thermal expansion of exposed flashing and trim.
   1. Form expansion joints of intermeshing hooked flanges, not less than 1 inch deep, filled with butyl sealant concealed within joints.
   2. Use lapped expansion joints only where indicated on Drawings.

D. Sealant Joints: Where movable, nonexpansion-type joints are required, form metal in accordance with cited sheet metal standard to provide for proper installation of elastomeric sealant.

E. Fabricate cleats and attachment devices from same material as accessory being anchored or from compatible, noncorrosive metal.
   1. Thickness: Unless otherwise indicated, provide cleats with a thickness one gauge heavier that the materials being anchored.
   2. Roof Edge Securement Assembly: For cleats that are part of a roof edge securement assembly, determine cleat thickness in accordance with ANSI/SPRI performance requirements.

F. Seams:
   1. Fabricate nonmoving seams with flat-lock seams. Form seams and seal with elastomeric sealant unless otherwise recommended by sealant manufacturer for intended use.
   2. Seams for Aluminum: Fabricate nonmoving seams with flat-lock seams. Form seams and seal with epoxy seam sealer.

G. Do not use graphite pencils to mark metal surfaces.

2.6 LOW-SLOPE ROOF SHEET METAL FABRICATIONS

A. Base Flashing, minimum thickness:
   1. Aluminum: 0.040 inch thick.
   2. Stainless Steel: 0.025 inch thick.
   3. Galvanized Steel: 0.034 inch thick.

B. Counterflashing, minimum thickness:
   1. Aluminum: 0.032 inch thick.
   2. Stainless Steel: 0.019 inch thick.
   3. Galvanized Steel: 0.028 inch thick.

C. Roof-Penetration Flashing: Fabricate from the following materials:
   1. Stainless Steel: Minimum 0.019 inch thick.
   2. Galvanized Steel: 0.028 inch thick.
   3. Round Flashings Only: As specified in Section 075400 - Thermoplastic Membrane Roofing for prefabricated penetration flashings.
   4. Pitch pans are not acceptable for use as penetration flashings for this project.

D. Roof-Drain Flashing: As specified in Section 075400 - Thermoplastic Membrane Roofing.

2.7 WALL SHEET METAL FABRICATIONS

A. Opening Flashings: Fabricate head, sill, jamb, and similar flashings to extend 4 inches beyond wall openings. Form head and sill flashing with 2 inch high, end dams. Fabricate from the following materials:
   1. Aluminum: Minimum 0.032 inch thick, where exposed to view and not in contact with concrete or soil.
   2. Stainless Steel: Minimum 0.019 inch thick, where indicated, 0.025 inch where in contact with concrete or soil.

2.8 DOWNSPOUTS

A. Downspouts: Profile as indicated on Drawings.
B. Downspouts: Size for rainfall intensity determined by a storm occurrence of 1 in 10 years in accordance with SMACNA (ASMM).
C. Accessories: Profiled to suit downspouts.
   1. Anchorage Devices: In accordance with SMACNA (ASMM) requirements.
D. Splash Pads: Precast concrete type, of size and profiles indicated; minimum 3,000 psi at 28 days, with minimum 5 percent air entrainment.
E. Seal metal joints.

2.9 TRIM

A. Break Metal Enclosures: Fabricate from the following materials:
   1. Aluminum: Minimum 0.050 inch thick.
   2. Profile: As indicated on drawings.

2.10 MISCELLANEOUS SHEET METAL FABRICATIONS

A. Equipment Support Flashing and Overhead Piping Safety Pans: Fabricate from the following materials:
   1. Stainless Steel: Minimum 0.019 inch thick.
   2. Galvanized Steel: Minimum 0.028 thick.

2.11 ACCESSORIES

A. Fasteners: Galvanized steel, with soft neoprene washers.
B. Underlayment: ASTM D226/D226M, organic roofing felt, Type II, No. 30.
C. Primer Type: Zinc chromate.
D. Concealed Sealants: Non-curing butyl sealant.
E. Exposed Sealants: ASTM C920; elastomeric sealant, with minimum movement capability as recommended by manufacturer for substrates to be sealed; color to match adjacent material.
F. Asphalt Roof Cement: ASTM D4586/D4586M, Type I, asbestos-free.

PART 3 EXECUTION

3.1 EXAMINATION

A. Examine substrates, areas, and conditions, with Installer present, to verify actual locations, dimensions and other conditions affecting performance of the Work.
   1. Verify compliance with requirements for installation tolerances of substrates.
   2. Verify that substrate is sound, dry, smooth, clean, sloped for drainage, and securely anchored.
   3. Verify that air- or water-resistant barriers have been installed over sheathing or backing substrate to prevent air infiltration or water penetration.
B. Verify roof openings, curbs, pipes, sleeves, ducts, and vents through roof are solidly set, reglets in place, and nailing strips located.
C. Verify roofing termination and base flashings are in place, sealed, and secure.
D. Prepare written report, endorsed by Installer, listing conditions detrimental to performance of the Work.

E. Proceed with installation only after unsatisfactory conditions have been corrected.

3.2 PREPARATION

A. Install starter and edge strips, and cleats before starting installation.
B. Back paint concealed metal surfaces with protective backing paint to a minimum dry film thickness of 15 mil, 0.015 inch.

3.3 INSTALLATION, GENERAL

A. Install sheet metal flashing and trim to comply with details indicated and recommendations of cited sheet metal standard that apply to installation characteristics required unless otherwise indicated on drawings.
   1. Install fasteners, solder, protective coatings, separators, sealants, and other miscellaneous items as required to complete sheet metal flashing and trim system.
   2. Install sheet metal flashing and trim true to line, levels, and slopes. Provide uniform, neat seams with minimum exposure of solder, welds, or sealant.
   3. Anchor sheet metal flashing and trim and other components of the Work securely in place, with provisions for thermal and structural movement.
   4. Install sheet metal flashing and trim to fit substrates and to result in watertight performance.
   5. Install continuous cleats with fasteners spaced not more than 12 inches on center.
   6. Space individual cleats not more than 12 inches apart. Attach each cleat with at least two fasteners. Bend tabs over fasteners.
   7. Install exposed sheet metal flashing and trim with limited oil-canning, and free of buckling and tool marks.
   8. Do not field cut sheet metal flashing and trim by torch.
   9. Do not use graphite pencils to mark metal surfaces.
B. Metal Protection: Where dissimilar metals will contact each other or corrosive substrates, protect against galvanic action by painting contact surfaces with bituminous coating or by other permanent separation as recommended by SMACNA (ASMM) .
   1. Coat back side of uncoated aluminum and stainless-steel sheet metal flashing and trim with bituminous coating where flashing and trim will contact wood, ferrous metal, or cementitious construction.
C. Expansion Provisions: Provide for thermal expansion of exposed flashing and trim.
   1. Space movement joints at a maximum of 10 feet with no joints allowed within 24 inches of corner or intersection.
   2. Form expansion joints of intermeshing hooked flanges, not less than 1 inch deep, filled with sealant concealed within joints.
   3. Use lapped expansion joints only where indicated on drawings.
D. Fasteners: Use fasteners of sizes that will penetrate metal framing not less than recommended by fastener manufacturer to achieve maximum pull-out resistance.
E. Conceal fasteners and expansion provisions where possible in exposed work and locate to minimize possibility of leakage. Cover and seal fasteners and anchors as required for a tight installation.
F. Seal joints as required for watertight construction.
   1. Use sealant-filled joints unless otherwise indicated.
      a. Embed hooked flanges of joint members not less than 1 inch into sealant.
      b. Form joints to completely conceal sealant.
      c. When ambient temperature at time of installation is between 40 and 70 degrees F, set joint members for 50 percent movement each way.
      d. Adjust setting proportionately for installation at higher ambient temperatures.
         1) Do not install sealant-type joints at temperatures below 40 degrees F.
   2. Prepare joints and apply sealants to comply with requirements in 079200 - Joint Sealants.
G. Soldered Joints: Clean surfaces to be soldered, removing oils and foreign matter.
   1. Pre-tin edges of sheets with solder to width of 1 1/2 inches; however, reduce pre-tinning where pre-tinned surface would show in completed Work.
   2. Do not solder metallic-coated steel and aluminum sheet.
   3. Do not pre-tin zinc-tin alloy-coated copper.

4. Do not use torches for soldering.
5. Heat surfaces to receive solder, and flow solder into joint.
   a. Fill joint completely.
   b. Completely remove flux and spatter from exposed surfaces.
6. Stainless Steel Soldering:
   a. Tin edges of uncoated sheets, using solder for stainless steel and acid flux.
   b. Promptly remove acid-flux residue from metal after tinning and soldering.
   c. Comply with solder manufacturer's recommended methods for cleaning and neutralization.

3.4 INSTALLATION OF ROOF-DRAINAGE SYSTEM

A. General: Install sheet metal roof-drainage items to produce complete roof-drainage system according to cited sheet metal standard unless otherwise indicated. Coordinate installation of roof perimeter flashing with installation of roof-drainage system.

B. Downspouts:
   1. Join sections with 1 1/2 inch telescoping joints.
   2. Provide hangers with fasteners designed to hold downspouts securely to walls.
   3. Locate hangers at top and bottom and at approximately 60 inches on center.
   4. Provide elbows at base of downspout to direct water away from building.
   5. Where indicated, connect downspouts to underground drainage system.

3.5 INSTALLATION OF ROOF FLASHING

A. General: Install sheet metal flashing and trim to comply with performance requirements, sheet metal manufacturer's written installation instructions, and SMACNA (ASMM) Architectural Sheet Metal Manual.
   1. Provide concealed fasteners where possible, set units true to line, and level as indicated.
   2. Install work with laps, joints, and seams that will be permanently watertight and weather resistant.

B. Counterflashing: Coordinate installation of counterflashing with installation of base flashing.
   1. Insert counterflashing in reglets or receivers and fit tightly to base flashing.
   2. Extend counterflashing 4 inches over base flashing.
   3. Lap counterflashing joints minimum of 4 inches.
   4. Secure in waterproof manner by means of interlocking folded seam or blind rivets and sealant unless otherwise indicated.

C. Roof-Penetration Flashing: Coordinate installation of roof-penetration flashing with installation of roofing and other items penetrating roof.

3.6 INSTALLATION OF WALL FLASHINGS

A. General: Install sheet metal wall flashing to intercept and exclude penetrating moisture according to cited sheet metal standard unless otherwise indicated. Coordinate installation of wall flashing with installation of wall-opening components such as windows, doors, and louvers.

B. Opening Flashings in Frame Construction: Install continuous head, sill, and similar flashings to extend 4 inches beyond wall openings.

3.7 INSTALLATION OF MISCELLANEOUS FLASHING

A. Equipment Support Flashing:
   1. Coordinate installation of equipment support flashing with installation of roofing and equipment.
   2. Weld or seal flashing with elastomeric sealant to equipment support member.

B. Overhead Piping Safety Pans:
   1. Suspend pans from structure above, independent of other overhead items such as equipment, piping, and conduit, unless otherwise indicated on drawings.
   2. Pipe and install drain line to plumbing waste or drainage system.

3.8 INSTALLATION TOLERANCES

A. Installation Tolerances: Shim and align sheet metal flashing and trim within installed tolerance of 1/4 inch in 20 feet on slope and location lines as indicated and within 1/8 inch offset of adjoining faces and of alignment of matching profiles.

3.9 FIELD QUALITY CONTROL

A. See Section 014000 - Quality Requirements for field inspection requirements.
B. Inspection will involve surveillance of work during installation to ascertain compliance with specified requirements.

3.10 CLEANING AND PROTECTION

A. See Section 017000 - Execution and Closeout Requirements for additional requirements.
B. Clean exposed metal surfaces of substances that interfere with uniform oxidation and weathering.
C. Clean and neutralize flux materials. Clean off excess solder.
D. Clean off excess sealants.
E. Remove temporary protective coverings and strippable films as sheet metal flashing and trim are installed unless otherwise indicated in manufacturer's written installation instructions.
F. On completion of sheet metal flashing and trim installation, remove unused materials and clean finished surfaces as recommended in writing by sheet metal flashing and trim manufacturer.
G. Maintain sheet metal flashing and trim in clean condition during construction.
H. Replace sheet metal flashing and trim that have been damaged or that have deteriorated beyond successful repair by finish touchup or similar minor repair procedures, as determined by Architect.

END OF SECTION

SECTION 077100 - ROOF SPECIALTIES

PART 1 GENERAL

1.1 SECTION INCLUDES

A. Manufactured roof specialties, including copings and fascias.

1.2 REFERENCE STANDARDS

A. AAMA 2605 - Voluntary Specification, Performance Requirements and Test Procedures for Superior Performing Organic Coatings on Aluminum Extrusions and Panels (with Coil Coating Appendix); 2022.
B. ANSI/SPRI/FM 4435/ES-1 - Test Standard for Edge Systems Used with Low Slope Roofing Systems; 2022.
C. ASTM A653/A653M - Standard Specification for Steel Sheet, Zinc-Coated (Galvanized) or Zinc-Iron Alloy-Coated (Galvannealed) by the Hot-Dip Process; 2025.
D. ASTM B209/B209M - Standard Specification for Aluminum and Aluminum-Alloy Sheet and Plate; 2021a.
E. ASTM C920 - Standard Specification for Elastomeric Joint Sealants; 2018 (Reapproved 2024).
F. ASTM C1311 - Standard Specification for Solvent Release Sealants; 2022.
G. ASTM D1187/D1187M - Standard Specification for Asphalt-Base Emulsions for Use as Protective Coatings for Metal; 1997 (Reapproved 2024).
H. ASTM D2244 - Standard Practice for Calculation of Color Tolerances and Color Differences from Instrumentally Measured Color Coordinates; 2025.
I. ASTM D4214 - Standard Test Methods for Evaluating the Degree of Chalking of Exterior Paint Films; 2023.
J. FM (AG) - FM Approval Guide; Current Edition.
K. NAAMM AMP 500-06 - Metal Finishes Manual; 2006.
L. NRCA (RM) - The NRCA Roofing Manual; 2025.

1.3 SUBMITTALS

A. See Section 013000 - Administrative Requirements for submittal procedures.
B. Product Data: Provide data on shape of components, materials and finishes, anchor types and locations.
    1. Include construction details, material descriptions, dimensions of individual components and profiles, and finishes.
C. Shop Drawings: Indicate configuration and dimension of components, adjacent construction, required clearances and tolerances, and other affected work.
    1. Include plans, elevations, expansion-joint locations, keyed details, and attachments to other work. Distinguish between plant- and field-assembled work.
    2. Include details for expansion and contraction; locations of expansion joints, including direction of expansion and contraction.
    3. Indicate profile and pattern of seams and layout of fasteners, cleats, clips, and other attachments.
    4. Detail termination points and assemblies, including fixed points.
    5. Include details of special conditions.
D. Samples for Initial Selection: For each type of manufactured coping indicated with factory-applied color finishes.
E. Samples for Verification:
    1. Include Samples of each type of manufactured coping to verify finish and color selection, in manufacturer's standard sizes.
    2. Include copings made from 12 inch lengths of full-size components in specified material, and including fasteners, cover joints, accessories, and attachments.
F. Manufacturer's Installation Instructions: Indicate special procedures, fasteners, supporting members, and perimeter conditions requiring special attention.
G. Qualification Data: For manufacturer and installer.
H. Product Certificates: For each type of roof specialty.

I. Product Test Reports: For copings, for tests performed by a qualified testing agency.
   1. If the basis-of-design manufacturer and product is not submitted, then the Contractor is responsible for:
      a. Engaging a California licensed professional engineer to stamp and sign the submittal, attesting that the coping system submitted complies with specified performance requirements.
      b. Obtaining a letter from the roofing system manufacturer’s technical department confirming that the coping system is included in the overall roofing system warranty.
J. Sample Warranty: For manufacturer's special warranty.
K. Maintenance Data: For roofing specialties to include in maintenance manuals.

1.4 QUALITY ASSURANCE

A. Manufacturer Qualifications: A firm with not less than 10 years experience regularly engaged in the production and sales of manufactured copings that have been used for similar applications with successful results, that meet or exceed performance requirements indicated, and of documenting this performance by inclusion in test reports. Manufacturer shall offer products pre-engineered and tested to meet SPRI ES-1 requirements.
   1. Source Limitations: Obtain manufactured copings by same manufacturer providing roofing as specified in Section 075400 - Thermoplastic Membrane Roofing.
B. Installer Qualifications: A firm with not less than 10 years experience installing manufactured copings similar in material, design, and extent to that indicated for this Project, whose work has resulted in installations with a record of successful in-service performance, and that employs installers and supervisors who are trained and approved by manufacturer to perform work of this Section.

1.5 MOCK-UPS

A. Build mockups to verify selections made under Sample submittals, to demonstrate aesthetic effects, and set quality standards for fabrication and installation.
   1. Build mockup of typical coping, approximately 10 feet long, including supporting construction, seams, attachments, roofing membrane underlayment, and accessories.
   2. Approval of mock-ups does not constitute approval of deviations from the Contract Documents contained in mock-ups unless Architect specifically approves such deviations in writing.
   3. Subject to compliance with requirements, approved mock-ups may become part of the completed Work if undisturbed at time of Substantial Completion.

1.6 DELIVERY, STORAGE, AND HANDLING

A. Do not store manufactured copings in contact with other materials that might cause staining, denting, or other surface damage. Store manufactured copings away from uncured concrete and masonry.
B. Protect strippable protective covering on manufactured copings from exposure to sunlight and high humidity, except to extent necessary for the period of roof-specialty installation.

1.7 FIELD CONDITIONS

A. Field Measurements: Verify profiles and tolerances of roof-specialty substrates by field measurements before fabrication, and indicate measurements on Shop Drawings.
B. Coordination: Coordinate manufactured copings with flashing, trim, and construction of parapets, roof deck, roof and wall panels, and other adjoining work to provide a leakproof, secure, and noncorrosive installation.

1.8 WARRANTY

A. Roofing-System Warranty: Manufactured copings are included in warranty provisions in:
   1. Section 075400 - Thermoplastic Membrane Roofing for copings at roofs fabricated from membrane roofing.
B. Special Warranty on Painted Finishes: Manufacturer agrees to repair finish or replace manufactured copings that show evidence of deterioration of factory-applied finishes within specified warranty period.
   1. Fluoropolymer Finish: Deterioration includes, but is not limited to, the following:

a. Color fading more than 5 Delta E units when tested according to ASTM D2244.
b. Chalking in excess of a No. 8 rating when tested according to ASTM D4214.
c. Cracking, checking, peeling, or failure of paint to adhere to bare metal.

2. Finish Warranty Period: 20 years from date of Substantial Completion.

PART 2 PRODUCTS

2.1 MANUFACTURERS

A. Basis of Design Product: Subject to compliance with requirements, provide the following:
1. Carlisle SynTech Incorporated; SecurEdge 300 Parapet Wall Coping.
2. Or equal

B. Source Limitations: Obtain manufactured copings approved by manufacturer providing roofing system warranty specified in Section 075400 - Thermoplastic Membrane Roofing.

2.2 PERFORMANCE REQUIREMENTS

A. General: Manufactured copings shall withstand wind loads, structural movement, thermally induced movement, and exposure to weather without failure due to defective manufacture, fabrication, installation, or other defects in construction. Manufactured copings shall not rattle, leak, or loosen, and shall remain watertight and prevent water intrusion into building interior.

B. FM (AG): Manufacture and install copings that are listed in FM Approvals RoofNav and approved for windstorm classification, Class 1-90. Identify materials with FM Approvals' markings.

C. SPRI Wind Design Standard: Manufacture and install copings tested according to ANSI/SPRI/FM 4435/ES-1 and capable of resisting the following design pressures:
1. Design Pressure: Per the California Building Code based upon wind speed criteria indicated on Structural Drawings.

D. Thermal Movements: Allow for thermal movements from ambient and surface temperature changes to prevent buckling, opening of joints, hole elongation, overstressing of components, failure of joint sealants, failure of connections, and other detrimental effects. Provide clips that resist rotation and avoid shear stress as a result of thermal movements. Base calculations on surface temperatures of materials due to both solar heat gain and nighttime-sky heat loss.
1. Temperature Change (Range): 120 degrees F, ambient; 180 degrees F, material surfaces.

2.3 COMPONENTS

A. Roof Edge Flashings: Factory fabricated to sizes required; corners mitered; concealed fasteners.
1. Configuration: Fascia, and edge securement for roof membrane.
2. Pull-Off Resistance: Tested in accordance with ANSI/SPRI/FM 4435/ES-1 using test methods RE-1 and RE-2 to positive and negative design wind pressure as defined by applicable local building code.

B. Copings: Factory fabricated to sizes required; corners mitered; concealed fasteners.
1. Configuration: Concealed continuous hold down cleat at both legs; internal splice piece at joints of same material, thickness, and finish as cap; concealed stainless steel fasteners.
a. Corners: Factory mitered and mechanically clinched and sealed watertight.
b. Coping-Cap Attachment Method: Hold-down cleats and metal drain chairs.
c. Cleats: Concealed, continuous galvanized-steel sheet, minimum 20 gauge.
2. Pull-Off Resistance: Tested in accordance with ANSI/SPRI/FM 4435/ES-1 using test method RE-3 to positive and negative design wind pressure as defined by applicable local building code.
3. Material: Formed aluminum sheet, 0.050 inch thick, minimum.
4. Finish: Two-coat fluoropolymer.
5. Color: As indicated on drawings.

C. Pipe and Penetration Flashing: Base of rounded aluminum, compatible with sheet metal roof systems, and capable of accomodating pipes sized between 3/8 inch and 12 inches.
1. Caps: EPDM.
2. Color: As indicated on drawings.

2.4 MATERIALS

A. Cleats: Zinc-Coated (Galvanized) Steel Sheet: ASTM A653/A653M, G90 coating designation.
B. Copings: Aluminum Sheet: ASTM B209/B209M, alloy as standard with manufacturer for finish required, with temper to suit forming operations and performance required.

2.5 UNDERLAYMENT MATERIALS

A. Roofing Locations: Extend roof flashing membrane material up and over parapet wall to form underlayment below coping. Coordinate with Section 075400 - Thermoplastic Membrane Roofing.
B. Elsewhere: As specified in Section 076200 - Sheet Metal Flashing and Trim.

2.6 FINISHES

A. Comply with NAAMM AMP 500-06 Metal Finishes Manual for recommendations for applying and designating finishes.
B. Protect mechanical and painted finishes on exposed surfaces from damage by applying a strippable, temporary protective covering before shipping.
C. Appearance of Finished Work: Noticeable variations in same piece are unacceptable. Variations in appearance of adjoining components are acceptable if they are within the range of approved Samples and are assembled or installed to minimize contrast.
D. PVDF (Polyvinylidene Fluoride) Coating: Superior Performance Organic Finish, AAMA 2605; multiple coat, thermally cured fluoropolymer finish system; color as indicated.
   1. Concealed Surface Finish: Apply pretreatment and manufacturer's standard acrylic or polyester backer finish consisting of prime coat and wash coat with a minimum total dry film thickness of 0.5 mil.

2.7 ACCESSORIES

A. Fasteners: Manufacturer's recommended fasteners, suitable for application and designed to meet performance requirements. Furnish the following unless otherwise indicated:
   1. Exposed Penetrating Fasteners: Gasketed screws with hex washer heads matching color of sheet metal.
   2. Fasteners for Aluminum: Aluminum or Series 300 stainless steel.
B. Sealant for Joints in Linear Components: As recommended by component manufacturer.
   1. Elastomeric Sealant: ASTM C920, elastomeric silicone polymer sealant of type, grade, class, and use classifications required by roofing-specialty manufacturer for each application.
   2. Butyl Sealant: ASTM C1311, single-component, solvent-release butyl rubber sealant; polyisobutylene plasticized; heavy bodied for hooked-type joints with limited movement.
C. Adhesive for Anchoring to Roof Membrane: Compatible with roof membrane and approved by roof membrane manufacturer.
D. Bituminous Coating: Cold-applied asphalt emulsion complying with ASTM D1187/D1187M .

PART 3 EXECUTION

3.1 EXAMINATION

A. Examine substrates, areas, and conditions, with Installer present, to verify actual locations, dimensions, and other conditions affecting performance of the Work.
B. Verify that deck, curbs, roof membrane, base flashing, and other items affecting work of this Section are in place and positioned correctly.
C. Examine walls and parapets for suitable conditions for manufactured copings.
D. Verify that substrate is sound, dry, smooth, clean, sloped for drainage where applicable, and securely anchored.
E. Proceed with installation only after unsatisfactory conditions have been corrected.

3.2 INSTALLATION

A. Install components in accordance with manufacturer's instructions and NRCA (RM) applicable requirements.

B. Install manufactured copings according to manufacturer's written instructions. Anchor manufactured copings securely in place, with provisions for thermal and structural movement. Use fasteners, solder, protective coatings, separators, underlayments, sealants, and other miscellaneous items as required to complete roof-specialty systems.

1. Install manufactured copings level, plumb, true to line and elevation; with limited oil-canning and without warping, jogs in alignment, buckling, or tool marks.
2. Provide uniform, neat seams with minimum exposure of solder and sealant.
3. Install manufactured copings to fit substrates and to result in weathertight performance. Verify shapes and dimensions of surfaces to be covered before manufacture.
4. Torch cutting of manufactured copings is not permitted.
5. Do not use graphite pencils to mark metal surfaces.

C. Metal Protection: Protect metals against galvanic action by separating dissimilar metals from contact with each other or with corrosive substrates by painting contact surfaces with bituminous coating or by other permanent separation as recommended by manufacturer.

1. Coat concealed side of uncoated aluminum manufactured copings with bituminous coating where in contact with wood, ferrous metal, or cementitious construction.
2. Bed flanges in thick coat of asphalt roofing cement where required by manufacturers of manufactured copings for waterproof performance.

D. Expansion Provisions: Allow for thermal expansion of exposed manufactured copings.

1. Space movement joints at a maximum of 10 feet with no joints within 18 inches of corners or intersections unless otherwise indicated on Drawings.
2. When ambient temperature at time of installation is between 40 and 70 degrees F, set joint members for 50 percent movement each way. Adjust setting proportionately for installation at higher ambient temperatures.

E. Fastener Sizes: Use fasteners of sizes that penetrate substrate not less than recommended by fastener manufacturer to achieve maximum pull-out resistance and complying with performance requirements.

F. Seal concealed joints with butyl sealant as required by roofing-specialty manufacturer.

G. Seal joints as required for weathertight construction. Place sealant to be completely concealed in joint. Do not install sealants at temperatures below 40 degrees F.

3.3 CLEANING AND PROTECTION

A. Clean exposed metal surfaces of substances that interfere with uniform oxidation and weathering.

B. Clean off excess sealants.

C. Remove temporary protective coverings and strippable films as manufactured copings are installed. On completion of installation, clean finished surfaces, including removing unused fasteners, metal filings, pop rivet stems, and pieces of flashing. Maintain manufactured copings in a clean condition during construction.

D. Replace manufactured copings that have been damaged or that cannot be successfully repaired by finish touchup or similar minor repair procedures.

END OF SECTION

SECTION 077200 - ROOF ACCESSORIES

PART 1 GENERAL

1.1 SECTION INCLUDES

A. Roof curbs.
B. Roof penetrations mounting curbs.

1.2 RELATED REQUIREMENTS

A. Section 075400 - Thermoplastic Membrane Roofing for flashing material provided as part of roofing systems and for coordination with roofing system and accessories.
B. Section 076200 - Sheet Metal Flashing and Trim for field-formed metal flashing and miscellaneous sheet metal trim and accessories.
C. Section 077100 - Roof Specialties: Other manufactured roof specialty items.

1.3 REFERENCE STANDARDS

A. AAMA 2605 - Voluntary Specification, Performance Requirements and Test Procedures for Superior Performing Organic Coatings on Aluminum Extrusions and Panels (with Coil Coating Appendix); 2022.

1.4 COORDINATION

A. Coordinate layout and installation of roof accessories with roofing membrane and base flashing and interfacing and adjoining construction to provide a leakproof, weathertight, secure, and noncorrosive installation.
B. Coordinate dimensions with rough-in information or Shop Drawings of equipment to be supported.

1.5 SUBMITTALS

A. See Section 013000 - Administrative Requirements for submittal procedures.
B. Product Data: Manufacturer's data sheets on each product to be used.
   1. Preparation instructions and recommendations.
   2. Storage and handling requirements and recommendations.
   3. Installation methods.
   4. Maintenance requirements.
C. Shop Drawings: Submit detailed layout developed for this project and provide dimensioned location and number for each type of roof accessory.
D. Warranty Documentation:
   1. Submit manufacturer warranty.
   2. Ensure that forms have been completed in Owner's name and registered with manufacturer.
E. Qualification Data: For manufacturer and installer.
F. Operations and Maintenance Data: For roof accessories to include in operation and maintenance manuals.

1.6 QUALITY ASSURANCE

A. Manufacturer Qualifications: A firm with not less than 10 years experience regularly engaged in the production and sales of roof accessories that have been used for similar applications with successful results, that meet or exceed performance requirements indicated, and of documenting this performance by inclusion in test reports.
B. Installer Qualifications: A firm with not less than 5 years experience installing roof accessories similar in material, design, and extent to that indicated for this Project, whose work has resulted in installations with a record of successful in-service performance, and that employs installers and supervisors who are trained and approved by manufacturer to perform work of this Section.

1.7 DELIVERY, STORAGE, AND HANDLING

A. Store products in manufacturer's unopened packaging until ready for installation.
B. Store products under cover and elevated above grade.

1.8 WARRANTY

A. See Section 017800 - Closeout Submittals for additional warranty requirements.
B. Manufacturer Warranty: Provide 10 year manufacturer warranty for painted finishes. Complete forms in Owner's name and register with manufacturer.

PART 2 PRODUCTS

2.1 ROOF CURBS

A. Roof Curbs Mounting Assemblies: Factory fabricated hollow sheet metal construction, internally reinforced, and capable of supporting superimposed live and dead loads and designated equipment load with fully mitered and sealed corner joints welded or mechanically fastened, and integral counterflashing with top and edges formed to shed water.
    1. Applications: Roof curbs used for roof penetrations/openings as indicated on drawings.
    2. Roof Curb Mounting Substrate: Curb substrate consists of corrugated metal roof deck with insulation.
    3. Sheet Metal Material:
        a. Aluminum: 0.080 inch minimum thickness, with 3003 alloy, and H14 temper.
            1) Polyvinylidene Fluoride (PVDF) Coating: Superior performing organic powder coating, AAMA 2605; pretreated metal with two-coat system including primer and color coat with at least 70 percent PVDF coating.
            2) Color: As indicated on drawings.
    4. Provide layouts and configurations indicated on drawings.
B. Curbs Adjacent to Roof Openings: Provide curb on each side of opening, with top of curb horizontal for equipment mounting.
    1. Provide preservative treated wood nailers along top of curb.
    2. Insulate inside curbs with 1-1/2 inch thick fiberglass insulation.
    3. Height Above Finished Roof Surface: 8 inches, minimum.
C. Pipe, Duct, or Conduit Mounting Curbs: Vertical posts, minimum 8 inches square unless otherwise indicated.
    1. Height Above Finished Roof Surface: 8 inches, minimum.

PART 3 EXECUTION

3.1 EXAMINATION

A. Do not begin installation until substrates have been properly prepared.
B. If substrate preparation is the responsibility of another installer, notify Architect of unsatisfactory preparation before proceeding.
C. Verify dimensions of roof openings for roof accessories.
D. Proceed with installation only after unsatisfactory conditions have been corrected.

3.2 PREPARATION

A. Clean surfaces thoroughly prior to installation.
B. Prepare surfaces using methods recommended by manufacturer for achieving acceptable results for applicable substrate under project conditions.

3.3 INSTALLATION

A. Install in accordance with manufacturer's instructions, in manner that maintains roofing system weather-tight integrity.
   1. Install roof accessories level; plumb; true to line and elevation; and without warping, jogs in alignment, buckling, or tool marks.
   2. Anchor roof accessories securely in place so they are capable of resisting indicated loads.
   3. Use fasteners, separators, sealants, and other miscellaneous items as required to complete installation of roof accessories and fit them to substrates.
   4. Install roof accessories to resist exposure to weather without failing, rattling, leaking, or loosening of fasteners and seals.

B. Metal Protection: Protect metals against galvanic action by separating dissimilar metals from contact with each other or with corrosive substrates by painting contact surfaces with bituminous coating or by other permanent separation as recommended by manufacturer.
   1. Coat concealed side of uncoated aluminum roof accessories with bituminous coating where in contact with wood, ferrous metal, or cementitious construction.
   2. Underlayment: Where installing roof accessories directly on cementitious or wood substrates, install a course of underlayment and cover with manufacturer's recommended slip sheet.

C. Equipment Support Installation: Install equipment supports to stop surfaces are level with each other.

D. Seal joints with elastomeric or butyl sealant as required by manufacturer of roof accessories.

3.4 CLEANING AND PROTECTION

A. See Section 017000 - Execution and Closeout Requirements for additional requirements.

B. Clean installed work to like-new condition.

C. Protect installed products until completion of project.

D. Touch-up, repair or replace damaged products before Date of Substantial Completion.

END OF SECTION

SECTION 078400 - FIRESTOPPING

PART 1 GENERAL

1.1 SECTION INCLUDES

A. Firestopping systems.
B. Firestopping of joints and penetrations in fire-resistance-rated and smoke-resistant assemblies, whether indicated on drawings or not, and other openings indicated.

1.2 RELATED REQUIREMENTS

A. Section 070553 - Fire and Smoke Assembly Identification.

1.3 REFERENCE STANDARDS

A. ASTM E90 - Standard Test Method for Laboratory Measurement of Airborne Sound Transmission Loss of Building Partitions and Elements; 2009 (Reapproved 2016).
B. ASTM A48/A48M - Standard Specification for Gray Iron Castings; 2022.
C. ASTM C919 - Standard Practice for Use of Sealants in Acoustical Applications; 2024.
D. ASTM E84 - Standard Test Method for Surface Burning Characteristics of Building Materials; 2026.
E. ASTM E90 - Standard Test Method for Laboratory Measurement of Airborne Sound Transmission Loss of Building Partitions and Elements; 2023.
F. ASTM E119 - Standard Test Methods for Fire Tests of Building Construction and Materials; 2024.
G. ASTM E814 - Standard Test Method for Fire Tests of Penetration Firestop Systems; 2024.
H. ASTM E1233/E1233M - Standard Test Method for Structural Performance of Exterior Windows, Doors, Skylights, and Curtain Walls by Cyclic Air Pressure Differential; 2014 (Reapproved 2021).
I. ASTM E1725 - Standard Test Methods for Fire Tests of Fire-Resistive Barrier Systems for Electrical System Components; 2023.
J. ASTM E1966 - Standard Test Method for Fire-Resistive Joint Systems; 2024.
K. ASTM E2174 - Standard Practice for On-Site Inspection of Installed Firestop Systems; 2024.
L. ASTM E2393 - Standard Practice for On-Site Inspection of Installed Fire Resistive Joint Systems and Perimeter Fire Barriers; 2024.
M. ASTM E2307 - Standard Test Method for Determining Fire Resistance of Perimeter Fire Barriers Using Intermediate-Scale, Multi-Story Test Apparatus; 2025.
N. ASTM E2837 - Standard Test Method for Determining the Fire Resistance of Continuity Head-of-Wall Joint Systems Installed between Rated Wall Assemblies and Nonrated Horizontal Assemblies; 2023a, with Editorial Revision (2024).
O. ASTM G21 - Standard Practice for Determining Resistance of Synthetic Polymeric Materials to Fungi; 2015, with Editorial Revision (2021).
P. ITS (DIR) - Directory of Listed Products; Current Edition.
Q. FM 4991 - Approval Standard of Firestop Contractors; 2013.
R. FM (AG) - FM Approval Guide; Current Edition.
S. UL 1479 - Standard for Fire Tests of Penetration Firestops; Current Edition, Including All Revisions.
T. UL 2079 - Standard for Tests for Fire Resistance of Building Joint Systems; Current Edition, Including All Revisions.
U. UL (FRD) - Fire Resistance Directory; Current Edition.

1.4 PREINSTALLATION MEETING

A. Conduct meeting 2 weeks before starting Work at Project site

1.5 SUBMITTALS

A. See Section 013000 - Administrative Requirements for submittal procedures.

B. Schedule of Firestopping: List each type of penetration, fire rating of the penetrated assembly, and firestopping test or design number.
C. Product Data: Provide data on product characteristics, performance ratings, and limitations.
D. Sustainable Design Submittal: Submit VOC content documentation for nonpreformed materials.
E. Manufacturer's Installation Instructions: Indicate preparation and installation instructions.
F. Manufacturer's Certificate: Certify that products meet or exceed specified requirements.
G. Manufacturer's qualification statement.
    1. An experienced firm regularly engaged in manufacturing penetration firestopping, that also manufactures joint firestopping systems that meets or exceeds performance requirements indicated, and of documenting this performance by inclusion in test reports and listings.
H. Installer's qualification statement.
    1. An experienced firm that has been approved by FM Approvals according to FM 4991 or been evaluated by UL and found to comply with its Qualified Firestop Contractor Program Requirements.

1.6 QUALITY ASSURANCE

A. Fire Testing: Provide firestopping assemblies of designs that provide the scheduled fire ratings when tested in accordance with methods indicated.
B. Manufacturer Qualifications: Company specializing in manufacturing the products specified in this section with minimum 10 years documented experience.
C. Installer Qualifications: Company specializing in performing the work of this section and:
    1. Approved by Factory Mutual Research Corporation under FM 4991, or meeting any two of the following requirements:
    2. Verification of minimum 3 years documented experience installing work of this type.
    3. Verification of at least 5 satisfactorily completed projects of comparable size and type.
    4. Licensed by local authorities having jurisdiction (AHJ).

1.7 FIELD CONDITIONS

A. Comply with firestopping manufacturer's recommendations for temperature and conditions during and after installation; maintain minimum temperature before, during, and for 3 days after installation of materials.
B. Provide ventilation in areas where solvent-cured materials are being installed.

1.8 COORDINATION

A. Coordinate construction of openings and penetrating items to ensure that penetration firestopping systems can be installed according to specified firestopping system design.
B. Coordinate sizing of sleeves, openings, core-drilled holes, or cut openings to accommodate penetration firestopping systems.

PART 2 PRODUCTS

2.1 MANUFACTURERS

A. Firestopping Manufacturers:
    1. 3M Fire Protection Products: www.3m.com/firestop/#sle.
    2. Hilti, Inc: www.hilti.com/#sle.
    3. Specified Technologies Inc: www.stifirestop.com/#sle.
    4. Or Equal.

2.2 SOURCE LIMITATIONS

A. Obtain penetration firestopping systems, in addition to joint firestopping systems from single source from single manufacturer.

2.3 PERFORMANCE REQUIREMENTS

A. Fire-Test-Response Characteristics:
   1. Perform penetration firestopping system tests by a qualified testing agency acceptable to authorities having jurisdiction.
   2. Joint firestopping systems shall bear classification marking of a qualified testing agency:
      a. UL Fire Resistance Directory.
      b. FM Global Building Materials Approval Guide.
      c. Intertek Group Directory of Building Products.

B. Sustainable Design Requirements: Fire-resistive joint system sealants shall comply with the following:
   1. Sealants shall have a VOC content of 250 g/L or less.

C. Mold Resistance: Provide penetration firestopping and sealing with mold and mildew resistance rating of zero as determined by ASTM G21.

2.4 MATERIALS

A. Primers, Sleeves, Forms, Insulation, Packing, Stuffing, and Accessories: Provide type of materials as required for tested firestopping assembly.

B. Fire Ratings: Refer to drawings for required systems and ratings.

2.5 FIRESTOPPING ASSEMBLY REQUIREMENTS

A. Perimeter Fire Containment Firestopping: Use system that has been tested according to ASTM E2307 to have fire resistance F Rating equal to required fire rating of floor assembly.

B. Head-of-Wall (HW) Joint System Firestopping at Joints Between Fire-Rated Wall Assemblies and Non-Rated Horizontal Assemblies: Use system that has been tested according to ASTM E2837 to have fire resistance F Rating equal to required fire rating of wall assembly.
   1. Movement: Provide systems that have been tested to show movement capability as indicated.

C. Floor-to-Floor (FF), Floor-to-Wall (FW), Head-of-Wall (HW), and Wall-to-Wall (WW) Joints, Except Perimeter, Where Both Are Fire-Rated: Use system that has been tested according to ASTM E1966 or UL 2079 to have fire resistance F Rating equal to required fire rating of the assembly in which the joint occurs.

D. Through Penetration Firestopping: Use system that has been tested according to ASTM E814 to have fire resistance F Rating equal to required fire rating of penetrated assembly.

E. Acoustically Rated Firestopping: Provide system tested in accordance with ASTM E90 with STC rating of 50, minimum.

2.6 FIRESTOPPING SYSTEMS

A. Firestopping: Any material meeting requirements.
   1. Fire Ratings: Use system that is listed by FM (AG), ITS (DIR), or UL (FRD) and tested in accordance with ASTM E814, ASTM E119, or UL 1479 with F Rating equal to fire rating of penetrated assembly and minimum T Rating Equal to F Rating and in compliance with other specified requirements.

B. Penetration Firestopping Systems: Systems that resist spread of fire, passage of smoke and other gases, and maintain original fire resistance rating of construction penetrated. Penetration firestopping systems are to be compatible with one another, with the substrates forming openings, and with penetrating items if any.

C. Joint Firestopping Systems: Systems that resist spread of fire, passage of smoke and other gases, and maintain original fire resistance rating of assemblies in or between which joint firestopping systems are installed. Joint firestopping systems shall accommodate building movements without impairing their ability to resist the passage of fire and hot gases.
   1. Joint firestopping systems that are compatible with one another, with the substrates forming openings, and with penetrating items, if any.
   2. Provide products that, upon curing, do not re-emulsify, dissolve, leach, breakdown, or otherwise deteriorate over time from exposure to atmospheric moisture, sweating pipes, ponding water or other forms of moisture.
   3. Provide firestop products that do not contain ethylene glycol.

D. Penetrations in Fire Resistance Rated Walls: Penetration firestopping systems with ratings determined in accordance with ASTM E814 or UL 1479.

1. F-Rating: Not less than the fire resistance rating of the wall penetrated.
2. Membrane Penetrations: Install recessed fixtures such that the required fire resistance will not be reduced.

E. Penetrations in Horizontal Assemblies: Penetration firestopping systems with ratings determined in accordance with ASTM E814 or UL 1479.
1. F-Rating: At least 1 hour, but not less than the fire resistance rating of the floor penetrated.
2. T-Rating: At least 1 hour, but not less than the fire resistance rating of the floor. The following floor penetrations do not require a T-rating:
a. Those within the cavity of a wall.
b. Floor, tub, or shower drains within a concealed space.
c. 4 inch or smaller metal conduit penetrating directly into metal-enclosed electrical switchgear.
3. W-Rating: Provide penetration firestopping systems with a Class 1 W rating in accordance with UL 1479.

F. Penetrations in Smoke Barriers: Penetration firestopping systems with ratings determined in accordance with UL 1479.
1. L-Rating: Not exceeding 5.0 cfm/square foot of penetration opening and no more than 50 cfm cumulative total for any 100 square foot at both ambient and elevated temperatures.

G. Intumescent Gypsum Wall Framing Gaskets: Applied to Steel Tracks, Runners, and Studs prior to Framing Installation. Provide products with fire, smoke, and acoustical ratings that allow movement up to 100 percent compression and/or extension in accordance with UL 2079 or ASTM E1966; have an L Rating less than 1 cfm/foot in accordance with UL 2079; and a minimum Sound Transmission Class rating of 56 in accordance with ASTM E90 or ASTM C919.

H. Aluminum curtain-wall assemblies with one- or two-piece rectangular mullions at least 2 1/2 inches by 5 inches, provide perimeter fire barrier system that does not require direct screw attachment to mullions and transoms to support and fasten curtain wall insulation. System to be tested in accordance with ASTM E2307 for up to 2 hour fire resistance and with ASTM E1233/E1233M for wind cycling equivalent to 108 mph wind for 500 cycles.

I. Joints in or between Fire Resistance Rated Construction: Provide joint firestopping systems with ratings determined per ASTM E1966 or UL 2079.
1. Fire Resistance Rating: Equal to or exceeding the fire resistance rating of the wall, floor, or roof in or between which it is installed.

J. Joints in Smoke Barriers: Provide joint firestopping systems with ratings determined per UL 2079 based on testing at a positive pressure differential of 0.30 inch wg.
1. L-Rating: Not exceeding 5.0 cfm/foot of joint at both ambient and elevated temperatures.

K. Exposed Penetration and Joint Firestopping Systems: Flame spread and smoke developed indexes of less than 25 and 450, respectively, in accordance with ASTM E84.

L. Manufactured Piping Penetration Firestopping System: Penetration firestopping systems with ratings determined per ASTM E814 or UL 1479, based on testing at a positive pressure differential of 0.01 inch wg.
1. F-Rating: At least 1 hour, but not less than the fire resistance rating of constructions penetrated.
2. T-Rating: At least 1 hour, but not less than the fire resistance rating of constructions penetrated except for floor penetrations within the cavity of a wall.
3. W-Rating: Provide penetration firestopping systems showing no evidence of water leakage when tested according to UL 1479.
4. Sleeve: Molded-PVC plastic, of length to match slab thickness and with integral nailing flange on one end for installation in cast-in-place concrete slabs.
5. Stack Fitting: ASTM A48/A48M, gray-iron, hubless-pattern wye branch with neoprene O-ring at base and gray-iron plug in thermal-release harness. Include PVC protective cap for plug.
6. Special Coating: Corrosion resistant on interior of fittings.

M. Accessories: Provide components for each penetration firestopping system that are needed to install fill materials and to maintain ratings required. Use only those components specified by penetration firestopping system manufacturer and approved by qualified testing and inspecting agency for conditions indicated.
1. Permanent forming/damming/backing materials.
2. Substrate primers.
3. Collars.
4. Steel sleeves.

2.7 FILL MATERIALS

A. Cast-in-Place Firestop Devices: Factory assembled devices for use in cast-in-place concrete floors and consisting of an outer sleeve lined with an intumescent strip, a flange attached to one end of the sleeve for fastening to concrete formwork, and a neoprene gasket.

B. Latex Sealants: Single component latex formulations that do not re-emulsify after cure during exposure to moisture.

C. Firestop Devices: Factory assembled collars formed from galvanized steel and lined with intumescent material sized to fit specific diameter of penetrant.

D. Intumescent Composite Sheets: Rigid panels consisting of aluminum foil faced intumescent elastomeric sheet bonded to galvanized steel sheet.

E. Intumescent Putties: Nonhardening, water resistant, intumescent putties containing no solvents or inorganic fibers.

F. Intumescent Wrap Strips: Single component intumescent elastomeric strips for use around combustible penetrants.

G. Mortars: Prepackaged dry mixes consisting of a blend of inorganic binders, hydraulic cement, fillers and lightweight aggregate formulated for mixing with water at Project site to form a nonshrinking, homogeneous mortar.

H. Pillows/Bags: Compressible, removable, and reusable intumescent pillows encased in fire retardant polyester or glass fiber cloth. Where exposed, cover openings with steel reinforcing wire mesh to protect pillows/bags from being easily removed.

I. Silicone Foams: Multicomponent, silicone based liquid elastomers that, when mixed, expand and cure in place to produce a flexible, nonshrinking foam.

J. Silicone Sealants: Single component, silicone based, neutral curing elastomeric sealants.

K. Fire-Rated Cable Sleeve Kits: Complete kits designed for new or existing cable penetrations through walls to accept standard accessories.

L. Thermal Wrap: Flexible protective wrap tested and listed for up to 2 hour fire ratings in accordance with ASTM E814 or UL 1479 for membrane penetrations or ASTM E1725 or UL 1724 for thermal barrier and circuit integrity protection.

M. Fire Rated Cable Pathways: Single or gangable device modules composed of a steel raceway with integral intumescent material and requiring no additional action in the form of plugs, twisting closure, putty, pillows, sealant, or otherwise to achieve fire and air-leakage ratings.

N. Retrofit Device for Cable Bundles: Factory made, intumescent, collar like device for firestopping existing over filled cable sleeves and capable of being installed around projecting sleeves and cable bundles.

O. Wall Opening Protective Materials: Intumescent, non-curing putty pads or self adhesive inserts for protection of electrical switch and receptacle boxes.

P. Fire Rated HVAC Retaining Angles: Steel angle system with integral intumescent firestop gasket for use around rectangular steel HVAC ducts without fire dampers.

Q. Firestop Plugs: Flexible, re-enterable, intumescent, foam rubber plug for use in blank round openings and cable sleeves.

R. Fire Rated Cable Grommet: Molded two piece grommet made of plenum-grade polymer and foam inner core for sealing small cable penetrations in gypsum walls up to 1/2 inch in diameter.

S. Closet Flange Gasket: Molded, single component, flexible, intumescent gasket for use beneath a water closet (toilet) flange in floor applications.

T. Endothermic Wrap: Flexible, insulating, fire resistant, endothermic wrap for protecting membrane penetrations of utility boxes, critical electrical circuits, communications lines, and fuel lines.

2.8 MIXING

A. Penetration Firestopping Materials: For those products requiring mixing before application, comply with penetration firestopping system manufacturer's written instructions for accurate proportioning of materials, water (if required), type of mixing equipment, selection of mixer speeds, mixing containers, mixing time, and other items or procedures needed to produce products of uniform quality with optimum performance characteristics for application indicated.

PART 3 EXECUTION

3.1 EXAMINATION

A. Examine condition with Installer present, verify openings are ready to receive the work of this section.
B. Proceed with installation only after unsatisfactory conditions have been corrected.

3.2 PREPARATION

A. Clean substrate surfaces of dirt, dust, grease, oil, loose material, or other materials that could adversely affect bond of firestopping material.
B. Remove incompatible materials that could adversely affect bond.
C. Prime substrates where recommended in writing by manufacturer using that manufacturer's recommended products and methods. Confine primers to areas of bond; do not allow spillage and migration onto exposed surfaces.
D. Apply a suitable bond-breaker to prevent three-sided adhesion in applications where this condition occurs, such as the intersection of a gypsum wall to floor or roof assembly where the joint is backed by a steel ceiling runner or track.
E. Masking Tape: Use masking tape to prevent penetration firestopping from contacting adjoining surfaces that will remain exposed on completion of the Work and that would otherwise be permanently stained or damaged by such contact or by cleaning methods used to remove stains. Remove tape as soon as possible without disturbing firestopping's seal with substrates.

3.3 INSTALLATION

A. Install materials in manner described in fire test report and in accordance with manufacturer's instructions, completely closing openings.
B. Wall and Penetration Identification: Refer to Section 070553 - Fire and Smoke Assembly Identification

3.4 FIELD QUALITY CONTROL

A. Manufacturer’s Field Services: Engage manufacturer’s representative for technical assistance and guidance for surface preparation and installation of joint firestopping systems:
   1. Arrange for manufacturer’s representative to observe initial installation of each type of joint firestopping system and at completion.
   2. Provide additional field observation when requested by Owner, Architect, or General Contractor.
   3. After each field visit, submit manufacturer’s written report of observations within 3 business days. The report shall note overall quality of work, deficiencies, and any other concerns, and recommend corrective actions.
B. Independent Testing Agency: Inspection agency employed and paid by Owner, will examine penetration firestopping in accordance with ASTM E2174 and ASTM E2393.
   1. Failed Test Retest Cost: Contractor responsibility.
   2. Do not begin construction until inspectors have verified compliance of materials.
   3. Do not use materials that fail tests and inspections.
C. Repair or replace penetration firestopping and joints at locations where inspection results indicate firestopping or joints do not meet specified requirements.
D. Enclose firestopping after inspection reports confirm firestopping follows requirements.

3.5 CLEANING AND PROTECTION

A. See Section 017000 - Execution and Closeout Requirements for additional requirements.
B. Clean adjacent surfaces of firestopping materials with cleaning materials that are approved in writing by penetration firestopping system manufacturers and that do not damage materials in which openings occur.
C. Provide final protection and maintain conditions during and after installation that ensure that penetration firestopping systems are without damage or deterioration at time of Substantial Completion.
D. Repair damage or deterioration immediately. Cut out and remove damaged or deteriorated penetration firestopping material and install new materials to produce systems complying with specified requirements.

END OF SECTION

SECTION 079200 - JOINT SEALANTS

PART 1 GENERAL

1.1 SECTION INCLUDES

A. Nonsag gunnable joint sealants.
B. Joint backings and accessories.

1.2 RELATED REQUIREMENTS

A. Section 016116 - Volatile Organic Compound (VOC) Content Restrictions: Additional requirements for sealants and primers.
B. Section 092116 - Gypsum Board Assemblies: Sealing acoustical and sound-rated walls and ceilings.
C. Section 093000 - Tiling: Sealant between tile and plumbing fixtures and at junctions with other materials and changes in plane.

1.3 REFERENCE STANDARDS

A. 21 CFR 177.2600 - Code of Federal Regulations Title 21 - Food and Drug Administration - Indirect Food additives: Polymers; 2023.
B. ASTM C661 - Standard Test Method for Indentation Hardness of Elastomeric-Type Sealants by Means of a Durometer; 2015 (Reapproved 2022).
C. ASTM C794 - Standard Test Method for Adhesion-in-Peel of Elastomeric Joint Sealants; 2018 (Reapproved 2022).
D. ASTM C834 - Standard Specification for Latex Sealants; 2017 (Reapproved 2023).
E. ASTM C919 - Standard Practice for Use of Sealants in Acoustical Applications; 2024.
F. ASTM C920 - Standard Specification for Elastomeric Joint Sealants; 2018 (Reapproved 2024).
G. ASTM C1087 - Standard Test Method for Determining Compatibility of Liquid-Applied Sealants with Accessories Used in Structural Glazing Systems; 2023.
H. ASTM C1193 - Standard Guide for Use of Joint Sealants; 2025.
I. ASTM C1248 - Standard Test Method for Staining of Porous Substrate by Joint Sealants; 2022.
J. ASTM C1521 - Standard Practice for Evaluating Adhesion of Installed Weatherproofing Sealant Joints; 2019 (Reapproved 2025).
K. ASTM E90 - Standard Test Method for Laboratory Measurement of Airborne Sound Transmission Loss of Building Partitions and Elements; 2023.
L. SCAQMD 1168 - Adhesive and Sealant Applications; 1989, with Amendment (2022).

1.4 SUBMITTALS

A. See Section 013000 - Administrative Requirements for submittal procedures.
B. Product Data: Submit manufacturer's technical data sheets for each product to be used; include the following:
   1. Physical characteristics, including movement capability, VOC content, hardness, cure time, and color availability.
   2. List of backing materials approved for use with the specific product.
   3. Backing material recommended by sealant manufacturer.
   4. Substrates that product is known to satisfactorily adhere to and with which it is compatible.
   5. Substrates the product should not be used on.
C. Color Cards for Initial Selection: Where sealant color is not specified, submit manufacturer's color cards showing standard colors available for selection.
D. Samples for Final Verification: Submit at least 2 physical samples for verification of color of each required sealant.
E. Sustainable Design Documentation: For sealants and primers, submit VOC content and emissions documentation; see Section 016116.
F. Joint-Sealant Schedule: Include the following information:

1. Joint sealant application, joint location, and designation.
2. Joint sealant manufacturer and product name.
3. Joint sealant formulation.
4. Joint sealant color.

G. Preconstruction Laboratory Test Reports: Submit at least 4 weeks prior to start of installation.
1. Materials forming joint substrates and joint sealant backings have been tested for compatibility and adhesion with joint sealants.
2. Interpretation of test results and written recommendations for primers and substrate preparation are needed for adhesion.

H. Preinstallation Field Adhesion Test Plan: Submit at least 2 weeks prior to start of installation.

I. Preinstallation Field Adhesion Test Reports: Submit completed Preinstallation Field Adhesion Test Reports log within 10 days after completion of tests; include bagged test samples and photographic records.

J. Field Quality Control Log: Submit completed log for each length or instance of sealant installed, within 10 days after completion of inspections/tests; include bagged test samples and photographic records, if any.

K. Manufacturer's qualification statement.

L. Installer's qualification statement.

M. Executed warranty.

1.5 QUALITY ASSURANCE

A. Manufacturer Qualifications: Company specializing in manufacturing the products specified in this section with minimum 10 years documented experience.

B. Installer Qualifications: Company specializing in performing the work of this section and with at least 5 years of documented experience and approved by manufacturer.

C. Preconstruction Laboratory Testing: Arrange for sealant manufacturer(s) to test each combination of sealant, substrate, backing, and accessories.
1. Adhesion Testing: In accordance with ASTM C794.
2. Compatibility Testing: In accordance with ASTM C1087.
3. Stain Testing: In accordance with ASTM C1248; cementitous, porous, masonry, or other substrate sensitive to staining.
4. Allow sufficient time for testing to avoid delaying the work.
5. Deliver sufficient samples to manufacturer for testing.
6. Report manufacturer's recommended corrective measures, if any, including primers or techniques not indicated in product data submittals.
7. Testing is not required if sealant manufacturer provides data showing previous testing, not older than 24 months, that shows satisfactory adhesion, lack of staining, and compatibility.

D. Preinstallation Field Adhesion Test Plan: Include destructive field adhesion testing of one sample of each combination of sealant type and substrate, except interior acrylic latex sealants, and include the following for each tested sample.
1. Identification of testing agency.
2. Name(s) of sealant manufacturer's field representatives who will be observing.
3. Test Method: ASTM C1521 Method A, Tail Procedure.
4. Preinstallation Field Adhesion Test Log Form: Include the following data fields, with known information filled out.
   a. Substrate; if more than one type of substrate is involved in a single joint, provide two entries on form, for testing each sealant substrate side separately.
   b. Test date.
   c. Sealant used.
   d. Copy of test method documents.
   e. Age of sealant upon date of testing.
   f. Test results, modeled after the sample form in the test method document.
   g. Indicate use of photographic record of test.
5. Report whether sealant failed to adhere to joint substrates or tore cohesively. Include data on pull distance used to test each kind of product and joint substrate. For sealants that fail adhesively, retest until satisfactory adhesion is obtained.

6. Evaluation of Preconstruction Field Adhesion Test Results: Sealants not evidencing adhesive failure from testing, in absence of other indications of noncompliance with requirements, will be considered satisfactory. Do not use sealants that fail to adhere to joint substrates during testing.
7. Testing will not be required if joint sealant manufacturers submit data that are based on previous testing, not older than 24 months, of sealant products for adhesion to, staining of, and compatibility with joint substrates and other materials matching those submitted

E. Field Adhesion Test Procedures:
1. Allow sealants to fully cure as recommended by manufacturer before testing.
2. Have a copy of the test method document available during tests.
3. Record the type of failure that occurred, other information required by test method, and the information required on the Field Quality Control Log.
4. When performing destructive tests, also inspect the opened joint for proper installation characteristics recommended by manufacturer, and report any deficiencies.
5. Deliver the samples removed during destructive tests in separate sealed plastic bags, identified with project, location, test date, and test results, to Owner.
6. If any combination of sealant type and substrate does not show evidence of minimum adhesion or shows cohesion failure before minimum adhesion, report results to Architect.

F. Destructive Field Adhesion Test: Test for adhesion in accordance with ASTM C1521, using Destructive Tail Procedure.
1. Sample: At least 18 inches long.
2. Minimum Elongation Without Adhesive Failure: Consider the tail at rest, not under any elongation stress; multiply the stated movement capability of the sealant in percent by two; then multiply 1 inch by that percentage; if adhesion failure occurs before the 1-inch mark is that distance from the substrate, the test has failed.
3. If either adhesive or cohesive failure occurs before minimum elongation, take necessary measures to correct conditions and retest; record each modification to products or installation procedures.
4. Repair failed portions of joints.
5. Prepare test and inspection reports.

1.6 FIELD CONDITIONS

A. Do not proceed with installation of joint sealants under the following conditions:
1. When ambient and substrate temperature conditions are outside limits permitted by joint-sealant manufacturer.
2. When joint substrates are wet.
3. Where joint widths are less than those allowed by joint-sealant manufacturer for applications indicated.
4. Where contaminants capable of interfering with adhesion have not yet been removed from joint substrates.

1.7 WARRANTY

A. See Section 017800 - Closeout Submittals for additional warranty requirements.

B. Special Manufacturer's Warranty: Manufacturer's standard form in which joint sealant manufacturer agrees to furnish joint sealants to repair or replace those that demonstrate deterioration or failure under normal use within warranty period specified.
1. Warranty Period: 20 years from date of Substantial Completion.

C. Special Installer's Warranty: Installer agrees to repair or replace joint sealants that do not comply with requirements, or that fail to stop the passage of air and/or water, within specified warranty period.
1. Warranty Period: 10 years from date of Substantial Completion.

D. Warranty Conditions: Special warranties exclude deterioration or failure of joint sealants in normal use due to structural movement resulting in stresses on joint sealants exceeding sealant manufacturer's written specifications, joint substrate deterioration, mechanical damage, or normal accumulation of dirt or other contaminants.

PART 2 PRODUCTS

2.1 MANUFACTURERS

A. Nonsag Sealants (Grade NS):
   1. Dow: www.dow.com/#sle.
   2. Pecora Corporation: www.pecora.com/#sle.
   3. Tremco Commercial Sealants & Waterproofing: www.tremcosealants.com/#sle.

2.2 JOINT SEALANT APPLICATIONS

A. Scope:
   1. Do Not Seal:
      a. Intentional weep holes in masonry.
      b. Joints indicated to be covered with expansion joint cover assemblies.
      c. Joints where sealant is specified to be furnished and installed by manufacturer of product to be sealed.
      d. Joints where sealant installation is specified in other sections.
      e. Joints between suspended ceilings and walls.
B. Type A - Exterior Joints: Nonsag nonstaining silicone sealant, unless otherwise indicated.
   1. Type B or D - Contact with Air and/or Weather Barrier: Silicone or Polyurethane sealant, as recommended by sealant manufacturer for weatherproofing porous stone, metal panels, and curtain wall framing.
   2. Type E - Control and Expansion Joints in Concrete Paving: Polyurethane traffic-grade sealant.
C. Type D - Interior Joints: Nonsag polyurethane sealant, unless otherwise indicated.
   1. Type F - Wall and Ceiling Joints in Nonwet Areas, Subject to No or Low Movement: Acrylic emulsion latex sealant.
   2. Type C - Joints between Tile in Wet Areas and Floors, Walls, and Ceilings: Mildew-resistant silicone sealant.
   3. Type G - In Sound Rated Assemblies: Acrylic latex sealant.
D. Interior Wet Areas: Bathrooms and restrooms; fixtures in wet areas include plumbing fixtures, countertops, cabinets, and other similar items.
E. Sound-Rated Assemblies: Walls and ceilings identified as STC rated, sound rated, or acoustical.

2.3 JOINT SEALANTS - GENERAL

A. Compatibility: Provide joint sealants and accessory materials that are compatible with one another, with joint substrates, and with materials in close proximity under use conditions, as demonstrated by sealant manufacturer by testing and related experience.
B. Sealants and Primers: Provide products having lower volatile organic compound (VOC) content than indicated in SCAQMD 1168.
   1. Architectural sealants - VOC content of 250 g/L or less.
   2. Sealant primers for nonporous substrates - VOC content of 250 g/L or less.
   3. Sealant primers for porous substrates - VOC content of 775 g/L or less.
C. Obtain joint sealants from single manufacturer for each sealant type.
D. Food Contact Suitability: Where sealants are required to be suitable for contact with food provide sealants complying with 21 CFR 177.2600
E. Colors: As indicated on drawings or selected by Architect from manufacturer's full range.

2.4 NONSAG JOINT SEALANTS (GRADE NS)

A. Type A - Nonstaining Silicone Sealant: ASTM C920, Grade NS, Uses NT, M and A; Type Single component, not expected to withstand continuous water immersion or traffic.
   1. Movement Capability: Plus and minus 50 percent, minimum.
   2. Nonstaining to Porous Stone: Nonstaining to light-colored natural stone when tested in accordance with ASTM C1248.

3. Dirt Pick-Up: Reduced dirt pick-up compared to other silicone sealants.
4. Cure Type: Single-component, neutral moisture curing.
5. Basis of Design Products:
   a. Dow; DOWSIL 756 SMS Building Sealant: www.dow.com/#sle.
   b. Dow; DOWSIL 790 Silicone Building Sealant: www.dow.com/#sle. Plus 100 percent and minus 50 percent.
   c. Dow; DOWSIL 795 Silicone Building Sealant, Carbon Neutral: www.dow.com/#sle.

B. Type B - Silicone Sealant: ASTM C920, Grade NS, Uses NT, M and A; Type Single component, not expected to withstand continuous water immersion or traffic.
1. Movement Capability: Plus and minus 25 percent, minimum.
2. Cure Type: Mildew-resistant acetoxy-curing.
3. Basis of Design Product:
   a. Dow; DOWSIL 758 Silicone Weather Barrier Sealant: www.dow.com/#sle.

C. Type C - Mildew Resistant Silicone Sealant: ASTM C920, Grade NS, Uses NT, M and A; Type Single component, mildew resistant; not expected to withstand continuous water immersion or traffic.
1. Movement Capability: Plus and minus 25 percent, minimum.
2. Regulatory Approvals: 21 CFR 177.2600
3. Products:
   a. Dow; DOWSIL 786 Silicone Sealant: www.dow.com/#sle
   b. _____.

D. Type D - Polyurethane Sealant: ASTM C920, Grade NS, Uses NT, M and A; Type Single component; not expected to withstand continuous water immersion or traffic.
1. Movement Capability: Plus and minus 50 percent, minimum.
2. Basis of Design Product:
   a. Tremco Commercial Sealants & Waterproofing; Dymonic 100: www.tremcosealants.com/#sle.

E. Type E - Nonsag Traffic Grade Polyurethane Sealant: ASTM C920, Grade NS, Uses T, I, M and A; Type Single or Multi-component; explicitly approved by manufacturer for continuous water immersion and traffic without the necessity to recess sealant below traffic surface.
1. Movement Capability: Plus and minus 50 percent, minimum.
2. Hardness Range: 20 to 30, Shore A, when tested in accordance with ASTM C661.
3. Basis of Design Product:
   a. Tremco Commercial Sealants & Waterproofing; Dymeric 240 FC: www.tremcosealants.com/#sle.
   b. _____.

F. Type F - Acrylic Emulsion Latex: Water based; ASTM C834, Type Single component, nonstaining, nonbleeding, not intended for exterior use.
1. Basis of Design Product:
   a. Pecora Corporation; AC-20 +Silicone: www.pecora.com/#sle.
   b. Tremco Commercial Sealants & Waterproofing; Tremflex 834: www.tremcosealants.com/#sle.

G. Type G - Acrylic Latex Sealant: ASTM C834; for use as acoustical sealant and in firestopping systems for expansion joints and through penetrations.
1. STC Rating: Complies with ASTM C919 and ASTM E90.
2. Basis of Design Products:
   a. Franklin International, Inc; Titebond Acoustical Smoke & Sound Sealant: www.titebond.com/#sle
   b. Pecora Corporation; AC-20 FTR (Fire and Temperature Rated): www.pecora.com/#sle.
   c. Specified Technologies Inc; Smoke N Sound Acoustical Sealant: www.stifirestop.com/#sle
   d. _____.
   e. _____.
   f. USG Corporation; SHEETROCK Acoustical Sealant: www.usg.com/#sle.

2.5 ACCESSORIES

A. Sealant Backing Materials, General: Materials placed in joint before applying sealants; assists sealant performance and service life by developing optimum sealant profile and preventing three-sided adhesion; type and size recommended by sealant manufacturer for compatibility with sealant, substrate, and application.

B. Backing Tape: Self-adhesive polyethylene tape with surface that sealant will not adhere to and recommended by tape and sealant manufacturers for specific application.

C. Masking Tape: Self-adhesive, nonabsorbent, nonstaining, removable without adhesive residue, and compatible with surfaces adjacent to joints and sealants.

D. Joint Cleaner: Noncorrosive and nonstaining type, type recommended by sealant manufacturer; compatible with joint forming materials.

E. Primers: Type recommended by sealant manufacturer to suit application; nonstaining.

PART 3 EXECUTION

3.1 EXAMINATION

A. Verify that joints are ready to receive work.

B. Verify that backing materials are compatible with sealants.

C. Proceed with installation only after unsatisfactory conditions have been corrected and meet sealant manufacturer's recommendations.

D. Preinstallation Adhesion Testing: Install a sample for each test location indicated in the test plan.

1. Test each sample as specified in PART 1 under QUALITY ASSURANCE article.
2. Notify Architect of date and time that tests will be performed, at least seven days in advance.
3. Arrange for sealant manufacturer's technical representative to be present during tests.
4. Record each test on Preinstallation Adhesion Test Log as indicated.
5. If any sample fails, review products and installation procedures, consult manufacturer, or take other measures that are necessary to ensure adhesion; retest in a different location; if unable to obtain satisfactory adhesion, report to Architect.
6. After completion of tests, remove remaining sample material and prepare joints for new sealant installation.

3.2 PREPARATION

A. Remove loose materials and foreign matter that could impair adhesion of sealant.

B. Clean joints, and prime as necessary, in accordance with manufacturer's instructions.

C. Mask elements and surfaces adjacent to joints from damage and disfigurement due to sealant work; be aware that sealant drips and smears may not be completely removable.

3.3 INSTALLATION

A. Install this work in accordance with sealant manufacturer's requirements for preparation of surfaces and material installation instructions.

B. Provide joint sealant installations complying with ASTM C1193.

C. Install acoustical sealant application work in accordance with ASTM C919.

D. Joint Priming: Prime joint substrates when recommended by sealant manufacturer or when indicated by preconstruction testing or experience. Apply recommended primer using sealant manufacturer's recommended application techniques.

E. Joint Backing: Select joint backing materials recommended by sealant manufacturer to be compatible with sealant material. Install backing material at depth required to produce profile of joint sealant allowing optimal sealant movement.

F. Install bond breaker backing tape where backer rod cannot be used.

G. Install sealant free of air pockets, foreign embedded matter, ridges, and sags, and without getting sealant on adjacent surfaces.

H. Sealant Application: Install sealants using methods recommended by sealant manufacturer, in depths recommended for application. Apply in continuous operation from bottom to top of joint vertically and horizontally in a single direction. Apply using adequate pressure to fill and seal joint width.

I. Do not install sealant when ambient temperature is outside manufacturer's recommended temperature range, or will be outside that range during the entire curing period, unless manufacturer's approval is obtained and instructions are followed.

J. Nonsag Sealants: Tool surface concave, unless otherwise indicated; remove masking tape immediately after tooling sealant surface.

K. Acoustical Ceiling Areas: Apply acoustical joint sealant at perimeter edge of molding of acoustical ceiling areas in a continuous ribbon concealed on back of vertical legs of moldings before they are installed.

3.4 FIELD QUALITY CONTROL

A. See Section 014000 - Quality Requirements for additional requirements.

B. Perform field quality control inspection/testing as specified in PART 1 under QUALITY ASSURANCE article.

C. Remove and replace failed portions of sealants using same materials and procedures as indicated for original installation.

D. Repair destructive test location damage immediately after evaluation and recording of results.

3.5 CLEANING AND PROTECTION

A. See Section 017000 - Execution and Closeout Requirements for additional requirements.

B. Clean off excess sealant or sealant smears adjacent to joints as the Work progresses by methods and with cleaning materials approved in writing by manufacturers of joint sealants and of products in which joints occur.

C. Protect joint sealants during and after curing period from contact with contaminating substances and from damage resulting from construction operations or other causes so sealants are without deterioration or damage at time of Substantial Completion. If, despite such protection, damage or deterioration occurs, cut out, remove, and repair damaged or deteriorated joint sealants immediately so installations with repaired areas are indistinguishable from original work.

END OF SECTION

SECTION 081113 - HOLLOW METAL DOORS AND FRAMES

PART 1 GENERAL

1.1 SECTION INCLUDES

A. Non-fire-rated hollow metal doors and frames.
B. Fire-rated hollow metal doors and frames.
C. Thermally insulated hollow metal doors with frames.
D. Sound-rated hollow metal doors and frames.

1.2 RELATED REQUIREMENTS

A. Section 087100 - Door Hardware.
B. Section 099000 - Painting and Coating

1.3 REFERENCE STANDARDS

A. ADA Standards - 2010 ADA Standards for Accessible Design; 2010.
B. ANSI/SDI A250.4 - Test Procedure and Acceptance Criteria for Physical Endurance for Steel Doors, Frames and Frame Anchors; 2024.
C. ANSI/SDI A250.6 - Recommended Practice for Hardware Reinforcing on Standard Steel Doors and Frames; 2024.
D. ANSI/SDI A250.8 - Specifications for Standard Steel Doors and Frames (SDI-100); 2023.
E. ANSI/SDI A250.10 - Test Procedure and Acceptance Criteria for Prime Painted Steel Surfaces for Steel Doors and Frames; 2025.
F. ANSI/SDI A250.11 - Recommended Erection Instructions for Steel Frames; 2022.
G. ASTM A153/A153M - Standard Specification for Zinc Coating (Hot-Dip) on Iron and Steel Hardware; 2023.
H. ASTM A653/A653M - Standard Specification for Steel Sheet, Zinc-Coated (Galvanized) or Zinc-Iron Alloy-Coated (Galvannealed) by the Hot-Dip Process; 2025.
I. ASTM A879/A879M - Standard Specification for Steel Sheet, Zinc Coated by the Electrolytic Process for Applications Requiring Designation of the Coating Mass on Each Surface; 2022.
J. ASTM A1008/A1008M - Standard Specification for Steel, Sheet, Cold-Rolled, Carbon, Structural, High-Strength Low-Alloy, High-Strength Low-Alloy with Improved Formability, Required Hardness, Solution Hardened, and Bake Hardenable; 2024.
K. ASTM A1011/A1011M - Standard Specification for Steel, Sheet and Strip, Hot-Rolled, Carbon, Structural, High-Strength Low-Alloy, High-Strength Low-Alloy with Improved Formability, and Ultra-High Strength; 2023.
L. ASTM C143/C143M - Standard Test Method for Slump of Hydraulic-Cement Concrete; 2020.
M. ASTM C476 - Standard Specification for Grout for Masonry; 2023.
N. ASTM C1363 - Standard Test Method for Thermal Performance of Building Materials and Envelope Assemblies by Means of a Hot Box Apparatus; 2024.
O. ASTM E90 - Standard Test Method for Laboratory Measurement of Airborne Sound Transmission Loss of Building Partitions and Elements; 2023.
P. ASTM E283/E283M - Standard Test Method for Determining Rate of Air Leakage Through Exterior Windows, Skylights, Curtain Walls, and Doors Under Specified Pressure Differences Across the Specimen; 2019.
Q. ASTM E330/E330M - Standard Test Method for Structural Performance of Exterior Windows, Doors, Skylights and Curtain Walls by Uniform Static Air Pressure Difference; 2014 (Reapproved 2021).
R. ASTM E336 - Standard Test Method for Measurement of Airborne Sound Attenuation Between Rooms in Buildings; 2025.
S. ASTM E413 - Classification for Rating Sound Insulation; 2022.
T. ASTM E1423 - Standard Practice for Determining Steady State Thermal Transmittance of Fenestration Systems; 2021.
U. BHMA A156.115 - Hardware Preparation in Steel Doors and Frames; 2016.
V. ICC A117.1 - Accessible and Usable Buildings and Facilities; 2017.

W. ITS (DIR) - Directory of Listed Products; Current Edition.
X. NAAMM HMMA 840 - Guide Specifications for Receipt, Storage and Installation of Hollow Metal Doors and Frames; 2024.
Y. NFPA 80 - Standard for Fire Doors and Other Opening Protectives; 2025.
Z. NFPA 101 - Life Safety Code; Most Recent Edition Adopted by Authority Having Jurisdiction, Including All Applicable Amendments and Supplements.
AA. NFPA 105 - Standard for Smoke Door Assemblies and Other Opening Protectives; 2025.
BB. NFPA 252 - Standard Methods of Fire Tests of Door Assemblies; 2022.
CC. UL (DIR) - Online Certifications Directory; Current Edition.
DD. UL 10C - Standard for Positive Pressure Fire Tests of Door Assemblies; Current Edition, Including All Revisions.
EE. UL 1784 - Standard for Air Leakage Tests of Door Assemblies and Other Opening Protectives; Current Edition, Including All Revisions.

1.4 COORDINATION

A. Coordinate anchorage installation for hollow-metal frames. Furnish setting drawings, templates, and directions for installing anchorages, including sleeves, concrete inserts, anchor bolts, and items with integral anchors. Deliver such items to project site in time for installation.
B. Coordinate requirements for installation of door hardware, electrified door hardware, and access control and security systems.

1.5 PREINSTALLATION MEETINGS

A. Preinstallation Conference: Conduct conference at Project site.

1.6 SUBMITTALS

A. See Section 013000 - Administrative Requirements for submittal procedures.
B. Product Data: Materials and details of design and construction, hardware locations, reinforcement type and locations, anchorage and fastening methods, and finishes; and one copy of referenced standards/guidelines.
C. Shop Drawings: Details of each opening, showing elevations, glazing, frame profiles, reinforcement, electrical requirements, and any indicated finish requirements.
D. Certificate: Certify products of this section meet or exceed specified acoustic requirements.
E. Test Reports: Indicate sound transmission class as tested in accordance with ASTM E90.
F. Product Schedule: For hollow-metal doors and frames, prepared by or under the supervision of supplier, using same reference numbers for details and openings as those on drawings. Coordinate with final door hardware schedule.
G. Installation Instructions: Manufacturer's published instructions, including any special installation instructions relating to this project.
H. Manufacturer's Certificate: Certification that products meet or exceed specified requirements.
I. Manufacturer's Qualification Statement.
J. Installer's Qualification Statement.
K. Qualification Data: For door inspector.
    1. Fire Rated Door Inspector: Submit documentation of compliance with NFPA 80, Section 5.2.3.1.
    2. Egress Door Inspector: Submit documentation of compliance with NFPA 101, Section 7.2.1.15.4.
    3. Submit copy of DHI Fire and Egress Door Assembly Inspector (FDAI) certificate.
L. Product Test Reports: For each type of fire-rated, sound-rated, and exterior/thermally-rated hollow-metal door and frame assembly for tests performed by a qualified testing agency indicating compliance with performance requirements.
M. Field quality-control reports.

1.7 QUALITY ASSURANCE

A. Manufacturer Qualifications: Provide hollow metal doors and frames from SDI Certified manufacturer: https://steeldoor.org/sdi-certified/#sle.

B. Installer Qualifications: Company specializing in performing work of the type specified and with at least 3 years of documented experience and approved by manufacturer.

C. Maintain at project site copies of reference standards relating to installation of products specified.

D. Testing Agency Qualifications: Independent testing agency accredited as an acoustical laboratory and certified to perform specified field testing.

E. Fire-Rated Door Inspector Qualifications: Inspector for field quality control inspections of fire-rated door assemblies is to meet the qualifications set forth in NFPA 80, Section 5.2.3.1 and the following:

1. Door and Hardware Institute Fire and Egress Door Assembly Inspector (FDAI) certification.

F. Egress Door Inspector Qualifications: Inspector for field quality-control inspections of egress door assemblies is to meet the qualifications set forth in NFPA 101, Section 7.2.1.15.4 and the following:

1. Door and Hardware Institute Fire and Egress Door Assembly Inspector (FDAI) certification.

1.8 DELIVERY, STORAGE, AND HANDLING

A. Comply with NAAMM HMMA 840 or ANSI/SDI A250.8 (SDI-100) in accordance with specified requirements.

B. Deliver hollow-metal doors and frames palletized, packaged, or crated to provide protection during transit and Project-site storage. Do not use nonvented plastic.

1. Provide additional protection to prevent damage to factory-finished units.

C. Deliver welded frames with two removable spreader bars across bottom of frames, tack welded to jambs and mullions.

D. Remove doors and frames from resilient packaging upon delivery on-site and inspect for damage, provide cover over doors for protection until installed, and store in vertical position braced with blocking to permit air circulation between components.

E. Store hollow-metal doors and frames vertically under cover at Project site with head up. Place on minimum 4 inch high wood blocking. Provide minimum 1/4 inch space between each stacked door to permit air circulation.

PART 2 PRODUCTS

2.1 MANUFACTURERS

A. Source Limitations: Obtain hollow metal doors and frames from single source from single manufacturer.

B. Hollow Metal Doors and Frames Manufacturers: Subject to compliance with requirements, provide products by one of the following:

1. Ceco Door, an Assa Abloy Group company: www.assaabloydss.com/#sle.
2. Curries, an Assa Abloy Group company: www.assaabloydss.com/#sle.
3. Substitutions: See Section 016000 - Product Requirements.

C. Sound-Rated Hollow Metal Doors and Frames:

1. IAC Acoustics; Noise-Lock Acoustic Doors: www.iacacoustics.com/#sle.
2. Noise Barriers; QuiteSwing: www.noisebarriers.com/#sle.
3. Substitutions: See Section 016000 - Product Requirements.
   a. Repair or replace sound control door components that have failed designated field testing, and retest to verify performance complies with specified requirements.

2.2 PERFORMANCE REQUIREMENTS

A. Requirements for Hollow Metal Doors and Frames:

1. Steel Sheet: Comply with one or more of the following requirements; galvannealed steel complying with ASTM A653/A653M, cold-rolled steel complying with ASTM A1008/A1008M, or hot rolled pickled and oiled (HRPO) steel complying with ASTM A1011/A1011M, commercial steel (CS) Type B, for each.
2. Accessibility: Comply with ICC A117.1 and ADA Standards.
   a. Opening Force of Sound Control Doors, Non-Fire Rated: The ADA defined maximum force to open and close is 5 lbf.
3. Inserts, Bolts, and Fasteners: Hot-dip galvanized in accordance with ASTM A153/A153M.

4. Exterior Door Top Closures: Flush end closure channel, with top and door faces aligned.
5. Door Edge Profile: Manufacturers standard for application indicated.
6. Typical Door Face Sheets: Flush.
7. Structural Performance, Exterior Doors: Capable of withstanding the following design wind loads:
    a. Design Wind Load: Per the California Building Code based on criteria as indicated on Structural Drawings.
    b. Testing: According to ASTM E330/E330M.
    c. Deflection Limits: Provide hollow metal doors and frames that withstand design wind load without evidencing permanent deformation or disengagement of door components.
8. Air Leakage, Exterior Doors: Air leakage of not more than the following at a static-air-pressure differential of 1.57 lbf/square foot when tested in accordance with ASTM E283/E283M, and complying with CEC 110.6:
    a. 0.3 cfm/square foot for nonresidential single doors.
    b. 1.0 cfm/square foot for nonresidential double doors.
9. Thermally Rated Door Assemblies: Provide door assemblies with U-factor of not more than 0.70 deg Btu/F x h x square foot when tested in accordance with ASTM C1363 or ASTM E1423, and complying with CEC Table 140.3-B.
10. Thermal Movements, Exterior Doors: Allow for thermal movements resulting from ambient and surface temperature changes.
    a. Temperature Change: 120 degree F, ambient; 180 degree F, material surfaces.

B. Combined Requirements: If a particular door and frame unit is indicated to comply with more than one type of requirement, comply with the specified requirements for each type; for instance, an exterior door that is also indicated as being sound-rated must comply with the requirements specified for exterior doors and for sound-rated doors; where two requirements conflict, comply with the most stringent.

2.3 HOLLOW METAL DOORS

A. Door Finish: Factory primed and field finished.
B. Door Type: As indicated on drawings
C. Construct hollow-metal doors and frames to comply with standards indicated for materials, fabrication, hardware locations, hardware reinforcement, tolerances, and clearances, and as specified.
D. Exterior Doors: Thermally insulated.
    1. Based on SDI Standards: ANSI/SDI A250.8 (SDI-100).
        a. Level 3 - Extra Heavy-duty.
        b. Physical Performance Level A, 1,000,000 cycles; in accordance with ANSI/SDI A250.4.
        c. Model 2 - Seamless.
        d. Door Face Metal Thickness: 16 gauge, 0.053 inch, minimum.
        e. Zinc Coating: A60/ZF180 galvannealed coating; ASTM A653/A653M.
    2. Door Core Material: Manufacturers standard core material/construction and in compliance with requirements.
    3. Door Thickness: 1-3/4 inches, nominal.
    4. Edge Bevel: Manufacturer's standard beveled edges.
    5. Bottom Edges: Close bottom edges of doors where required for attachment of weather stripping with end closures or channels of same material as face sheets. Provide weep-hole openings in bottoms of exterior doors to permit moisture to escape.
    6. Core: Vertical steel stiffener with manufacturer's standard insulation between stiffeners.
E. Interior Doors, Non-Fire-Rated:
    1. Based on SDI Standards: ANSI/SDI A250.8 (SDI-100).
        a. Level 3 - Extra Heavy-duty.
        b. Physical Performance Level A, 1,000,000 cycles; in accordance with ANSI/SDI A250.4.
        c. Model 2 - Seamless.
        d. Door Face Metal Thickness: 16 gauge, 0.053 inch, minimum.
            1) Uncoated steel sheet, except metallic-coated with minimum A40 coating at wet/humid locations.
    2. Door Thickness: 1-3/4 inches, nominal.

3. Edge Bevel: Provide manufacturer's standard beveled edges.
4. Core: Vertical steel stiffener with manufacturer's standard insulation.

F. Fire-Rated Doors:
1. Based on SDI Standards: ANSI/SDI A250.8 (SDI-100).
a. Level 3 - Extra Heavy-duty.
b. Physical Performance Level A, 1,000,000 cycles; in accordance with ANSI/SDI A250.4.
c. Model 2 - Seamless.
d. Door Face Metal Thickness: 16 gauge, 0.053 inch, minimum.
2. Fire Rating: As indicated on Door Schedule, tested in accordance with UL 10C and NFPA 252 ("positive pressure fire tests").
3. Provide units listed and labeled by UL (DIR) or ITS (DIR).
a. Attach fire rating label to each fire rated unit.
4. Smoke and Draft Control Doors: Self-closing or automatic closing doors in accordance with NFPA 80 and NFPA 105, with fire-resistance-rated wall construction rated the same or greater than the fire-rated doors, and the following;
a. Maximum Air Leakage: 3.0 cfm/sq ft of door opening at 0.10 inch w.g. pressure, when tested in accordance with UL 1784 at both ambient and elevated temperatures.
b. Gasketing: Provide gasketing or edge sealing as necessary to achieve leakage limit.
c. Label: Include the "S" label on fire-rating label of door.
5. Door Core Material: Manufacturers standard core material/construction in compliance with requirements.
6. Door Thickness: 1-3/4 inches, nominal.

G. Sound-Rated Interior and Exterior Doors:
1. Based on SDI Standards: ANSI/SDI A250.8 (SDI-100).
a. Level 3 - Extra Heavy-duty.
b. Physical Performance Level A, 1,000,000 cycles; in accordance with ANSI/SDI A250.4.
c. Model 2 - Seamless.
d. Door Face Metal Thickness: 16 gauge, 0.053 inch, minimum.
2. Sound Transmission Class (STC) Rating of Door and Frame Assembly: STC of 40 or 60 as indicated on drawings, calculated in accordance with ASTM E413, and tested in accordance with ASTM E90.
3. Door Core Material: Manufacturer's standard construction as required to meet acoustic requirements indicated.
4. Door Thickness: As required to meet acoustic requirements indicated.
5. Sound Seals: As required by manufacturer to meet indicated sound control ratings.

2.4 HOLLOW METAL FRAMES

A. Comply with standards and/or custom guidelines as indicated for corresponding door in accordance with applicable door frame requirements.
B. Frame Finish: Same as hollow metal door.
C. Frame Type: As indicated on drawings
D. Exterior Door Frames: Full profile/continuously welded type.
1. Galvanizing: Components hot-dipped zinc-iron alloy-coated (galvannealed) in accordance with ASTM A653/A653M, with A60/ZF180 coating.
2. Frame Metal Thickness: 16 gauge, 0.053 inch, minimum.
3. Weatherstripping: Separate, see Section 087100.

E. Interior Door Frames, Non-Fire Rated: Full profile/continuously welded type.
1. Frame Metal Thickness: 16 gauge, 0.053 inch, minimum.
a. Uncoated steel sheet, except metallic-coated with minimum A40 coating at wet/humid locations.

F. Door Frames, Fire-Rated: Full profile/continuously welded type.
1. Fire Rating: Same as door, labeled.
2. Frame Metal Thickness: 16 gauge, 0.053 inch, minimum.

G. Sound-Rated Door Frames: Full profile/continuously welded type.

1. Comply with standards and custom guidelines for corresponding door in accordance with applicable door frame requirements.
2. Frame Metal Thickness: 14 gauge, 0.067 inch, minimum.

2.5 FABRICATION

A. Hollow Metal Frames: Fabricate in one piece except where handling and shipping limitations require multiple sections. Where frames are fabricated in sections, provide alignment plates or angles at each joint, fabricated of metal of same or greater thickness as frames.
1. Provide countersunk, flat- or oval-head exposed screws and bolts for exposed fasteners unless otherwise indicated.
2. Door Silencers: Except on weather-stripped frames, drill stops to receive door silencers as follows. Keep holes clear during construction.
a. Single Door Frames: Drill stop in strike jamb to receive three door silencers.
b. Double Door Frames: Drill stop in head jamb to receive two door silencers.
B. Hardware Preparation: Factory prepare hollow-metal doors and frames to receive templated mortised hardware, and electrical wiring; include cutouts, reinforcement, mortising, drilling, and tapping in accordance with ANSI/SDI A250.6, the Door Hardware Schedule on Drawings, and templates.
1. Reinforce doors and frames to receive non-templated, mortised, and surface-mounted door hardware.
2. Comply with BHMA A156.115 for preparing hollow-metal doors and frames for hardware.

2.6 FINISHES

A. Primer: Rust inhibiting, complying with ANSI/SDI A250.10, door manufacturer's standard.

2.7 ACCESSORIES

A. Astragals for Double Doors: Specified in Section 087100.
B. Grout for Frames: Mortar grout complying with ASTM C476 with maximum slump of 4 inches as measured in accordance with ASTM C143/C143M for hand troweling in place; plaster grout and thinner pumpable grout are prohibited.
C. Silencers: Resilient rubber, fitted into drilled hole; provide three on strike side of single door, three on center mullion of pairs, and two on head of pairs without center mullions.
D. Frame Anchors:
1. Jamb Anchors:
a. Type: Anchors of minimum size and type required by applicable door and frame standard, and suitable for performance level indicated.
b. Quantity: Minimum of three anchors per jamb, with one additional anchor for frames with no floor anchor. Provide one additional anchor for each 24 inches of frame height above 7 feet.
c. Post-installed Expansion Anchor: Minimum 3/8 inch diameter bolts with expansion shields or inserts, with manufacturer's standard pipe spacer.
2. Floor Anchors: Provide floor anchors for each jamb and mullion that extends to floor.
3. Floor Anchors for Concrete Slabs with Underlayment: Adjustable type anchors with extension clips, allowing not less than 2 inch height adjustment. Terminate bottom of frames at top of underlayment.
4. Material: ASTM A879/A879M, Commercial Steel (CS), 04Z coating designation; mill phosphatized.
a. For anchors built into exterior walls, steel sheet complying with ASTM A1008/A1008M or ASTM A1011/A1011M; hot-dip galvanized in accordance with ASTM A153/A153M, Class B.

PART 3 EXECUTION

3.1 EXAMINATION

A. Examine roughing-in for embedded and built-in anchors to verify actual locations before frame installation.
B. Verify that finished walls are in plane to ensure proper door alignment.

C. Prepare written report, endorsed by Installer, listing conditions detrimental to performance of the Work.
D. Proceed with installation only after unsatisfactory conditions have been corrected.

3.2 PREPARATION

A. Coat inside of frames to be installed in masonry or to be grouted, with bituminous coating, prior to installation.
B. Remove welded-in shipping spreaders installed at factory. Restore exposed finish by grinding, filling, and dressing, as required to make repaired area smooth, flush, and invisible on exposed faces. Touch up factory-applied finishes where spreaders are removed.
C. Drill and tap doors and frames to receive non-templated, mortised, and surface-mounted door hardware.

3.3 INSTALLATION

A. Install doors and frames in accordance with manufacturer's instructions and related requirements of specified door and frame standards or custom guidelines indicated.
B. Hollow-Metal Frames: Comply with ANSI/SDI A250.11.
    1. Set frames accurately in position; plumbed, aligned, and braced securely until permanent anchors are set. After wall construction is complete, remove temporary braces without damage to completed Work.
        a. Install frames with removable stops located on secure side of opening.
    2. Fire-Rated Openings: Install frames in accordance with NFPA 80.
    3. Floor Anchors: Secure with post-installed expansion anchors.
        a. Floor anchors may be set with power-actuated fasteners instead of post-installed expansion anchors if so indicated and approved on Shop Drawings.
    4. Solidly pack mineral-fiber insulation inside frames.
    5. Masonry Walls: Coordinate installation of frames to allow for solidly filling space between frames and masonry with grout or mortar.
    6. In-Place Concrete or Masonry Construction: Secure frames in place with post-installed expansion anchors. Countersink anchors, and fill and make smooth, flush, and invisible on exposed faces.
    7. Installation Tolerances: Adjust hollow-metal frames to the following tolerances:
        a. Squareness: Plus or minus 1/16 inch, measured at door rabbet on a line 90 degrees from jamb perpendicular to frame head.
        b. Alignment: Plus or minus 1/16 inch, measured at jambs on a horizontal line parallel to plane of wall.
        c. Twist: Plus or minus 1/16 inch, measured at opposite face corners of jambs on parallel lines, and perpendicular to plane of wall.
        d. Plumbness: Plus or minus 1/16 inch, measured at jambs at floor.
C. Hollow-Metal Doors: Fit and adjust hollow-metal doors accurately in frames, within clearances specified below.
    1. Non-Fire-Rated Steel Doors: Comply with ANSI/SDI A250.8.
    2. Fire-Rated Doors: Install doors with clearances in accordance with NFPA 80.
    3. Smoke-Control Doors: Install doors in accordance with NFPA 105.
D. Install fire rated units in accordance with NFPA 80.
E. Coordinate frame anchor placement with wall construction.
F. Grout frames in masonry construction, using hand trowel methods; brace frames so that pressure of grout before setting will not deform frames.
G. Install door hardware as specified in Section 087100.

3.4 TOLERANCES

A. Maximum Diagonal Distortion: 1/16 inch measured with straight edge, corner to corner.

3.5 FIELD QUALITY CONTROL (BY CONTRACTOR)

A. Inspection Agency: Engage a qualified inspector to perform inspections and to furnish reports to Architect.
B. Inspections:

1. Fire-Rated Door Inspections: Inspect each fire-rated door in accordance with NFPA 80, Section 5.2.
2. Egress Door Inspections: Inspect each door equipped with panic hardware, each door equipped with fire exit hardware, each door located in an exit enclosure, each electrically controlled egress door, and each door equipped with special locking arrangements in accordance with NFPA 101, Section 7.2.1.15.
3. Provide field testing of installed sound control doors by independent laboratory in accordance with ASTM E336 test methods, with results calculated in accordance with ASTM E413 and having acceptable field noise isolation class (NIC) values within 5 dB of laboratory STC rating values.
    a. Perform field tests on one individual door of each type in designated locations as directed by Architect.
    b. Testing agency to submit testing report to Contractor and Architect within 24 hours after completion of field testing.

C. Repair or remove and replace installations where inspections indicate that they do not comply with specified requirements.

D. Reinspect repaired or replaced installations to determine if replaced or repaired door assembly installations comply with specified requirements.

E. Prepare and submit separate inspection report for each fire-rated door assembly indicating compliance with each item listed in NFPA 80 and NFPA 101.

3.6 ADJUSTING

A. Initial Adjustment: Adjust and check each hollow metal door and frame to ensure proper operation and function of every unit.
    1. Verify door opening force is 1 lbf or less without closer attached.

B. Rehang or replace doors that do not swing or operate freely.

C. Adjust sound control doors so that seals are fully engaged when door is closed.

D. Test sound control doors for force to close, latch, and unlatch; adjust as necessary in compliance with requirements.

3.7 CLEANING,PROTECTION AND REPAIR

A. See Section 017000 - Execution and Closeout Requirements for additional requirements.

B. Clean and maintain the door and frame finish for a fresh appearance.

C. Touch-up, repair or replace damaged products before substantial completion.

D. Prime-Coat Touchup: Immediately after erection, sand smooth rusted or damaged areas of prime coat and apply touchup of compatible air-drying, rust-inhibitive primer.

E. Metallic-Coated Surface Touchup: Clean abraded areas and repair with galvanizing repair paint in accordance with manufacturer's written instructions.

END OF SECTION

SECTION 083100 - ACCESS DOORS AND PANELS

PART 1 GENERAL

1.1 SECTION INCLUDES

A. Wall- and ceiling-mounted access units.

1.2 RELATED REQUIREMENTS

A. Section 099000 - Painting and Coating
B. Division 23 for heating and air-conditioning duct access doors.

1.3 REFERENCE STANDARDS

A. ASTM A480/A480M - Standard Specification for General Requirements for Flat-Rolled Stainless and Heat-Resisting Steel Plate, Sheet, and Strip; 2025b.
B. ITS (DIR) - Directory of Listed Products; Current Edition.
C. NAAMM AMP 500-06 - Metal Finishes Manual; 2006.
D. NFPA 80 - Standard for Fire Doors and Other Opening Protectives; 2025.
E. NFPA 252 - Standard Methods of Fire Tests of Door Assemblies; 2022.
F. UL (FRD) - Fire Resistance Directory; Current Edition.
G. UL 10B - Standard for Fire Tests of Door Assemblies; Current Edition, Including All Revisions.

1.4 ADMINISTRATIVE REQUIREMENTS

A. Coordination
1. Coordinate anchorage installation for access doors and frames. Furnish setting drawings, templates, and directions for installing anchorages, including sleeves, concrete inserts, anchors, and items with integral anchors. Deliver such items to project site in time for installation.
2. Coordinate installation with work of other trades, and obtain information on door sizes and exact locations from other trades.

1.5 SUBMITTALS

A. See Section 013000 - Administrative Requirements for submittal procedures.
B. Product Data: Provide sizes, types, finishes, hardware, scheduled locations, and details of adjoining work.
C. Shop Drawings: Indicate exact position of each access door and/or panel unit and installation details.
D. Manufacturer's Installation Instructions: Indicate installation requirements.
E. Manufacturer's qualification statement.

1.6 QUALITY ASSURANCE

A. Manufacturer Qualifications: Company specializing in manufacturing the products specified in this section with minimum 5 years documented experience.
B. Fire-Rated Door Inspector Qualifications: Inspector for field quality control inspections of fire-rated door assemblies shall meet the qualifications set forth in NFPA 80, section 5.2.3.1 and "Door and Hardware Institute Fire and Egress Door Assembly Inspector" (FDAI) certification.

PART 2 PRODUCTS

2.1 PERFORMANCE REQUIREMENTS

A. Fire-Rated Access Doors and Frames: Assemblies complying with NFPA 80 that are listed and labeled by a qualified testing agency, for fire-protection ratings indicated, according to NFPA 252 or UL 10B.
B. Source Limitations: Obtain each mounting type from a single source and a single manufacturer.

2.2 ACCESS DOORS AND PANELS ASSEMBLIES

A. Wall- and Ceiling-Mounted Units:
   1. Location: As indicated on drawings, or as indicated below.
   2. Size: 24 by 24 inches, or as indicated on drawings, or as selected by Architect from manufacturer's standard-size units.
   3. Door/Panel: Hinged, standard duty, with tool-operated spring, touch-spring, or cam lock. No handle, unless noted.
   4. Surface Mounted Criteria: Provide face frame and door surface flush with frame surface.
   5. Fire Rated Criteria: Provide face frame and door surface flush with frame surface.
      a. Location: As required at fire rated wall assemblies.

B. Wall-Mounted Units in Wet Areas:
   1. Location: As indicated on drawings, or as indicated below.
   2. Panel Material: Stainless steel, Type 304.
   3. Size: 24 by 24 inches, or as indicated on drawings, or as selected by Architect from manufacturer's standard-size units.
   4. Door/Panel: Hinged, standard duty, with tool-operated spring or cam lock and no handle.
   5. Surface Mounting Criteria: Provide face frame and door surface flush with frame surface.

2.3 WALL- AND CEILING-MOUNTED ACCESS UNITS

A. Manufacturers:
   1. ACUDOR Products Inc: www.acudor.com/#sle.
      a. Fire-rated wall and ceiling: FW-5050, flush steel door.
      b. Gypsum board wall and ceiling: UF-5500, flush steel door.
      c. Toilet room wall: UF-5000, flush stainless steel door.
   2. Elmdor: www.elmdor.com/#sle.
      a. Fire-rated wall and ceiling: FRC, flush steel door.
      b. Gypsum board wall and ceiling: DW, flush steel door.
      c. Toilet room wall: DW-SS, flush stainless steel door.
   3. Karp Associates, Inc: www.karpinc.com/#sle.
      a. Fire-rated wall and ceiling: KRP-150FR, flush steel door.
      b. Gypsum board wall and ceiling: DSC-214M, flush steel door.
      c. Toilet room wall: DSC-214M, flush stainless steel door.
   4. Nystrom: www.nystrom.com/#sle.
      a. Acoustic and fire-rated wall and ceiling: IT / IW, flush steel door.
      b. Gypsum board wall and ceiling: NW, flush steel door.
      c. Toilet room wall: NT, flush stainless steel door.
   5. Milcor Company: www.milcorinc.com/#sle.
      a. Acoustic and fire-rated wall and ceiling: Model UFR DW, flush steel door.
      b. Gypsum board wall and ceiling: Model DW, flush steel door.
      c. Toilet room wall: Model M, flush stainless steel door.

B. Wall- and Ceiling-Mounted Units: Factory-fabricated door and frame, fully assembled units with corner joints welded, filled and ground flush; square and without rack or warp; coordinate requirements with type of installation assembly being used for each unit.
   1. Style: Exposed frame with door surface flush with frame surface.
      a. Gypsum Board Mounting Criteria: Use drywall bead type frame.
   2. Door Style: Single thickness with rolled or turned in edges.
   3. Frames: 16-gauge, 0.0598-inch minimum thickness.
   4. Single Steel Sheet Door Panels: 16-gauge, 0,0625-inch minimum thickness.
   5. Units in Fire-Rated Assemblies: Fire rating as required by applicable code for fire-rated assembly that access doors are being installed.
      a. Provide products listed by ITS (DIR) or UL (FRD) as suitable for purpose indicated.
   6. Stainless Steel Finish: No.4 brushed finish at toilet rooms and other similar wet/humid locations

7. Door/Panel Size: Minimum size required for equipment access.
8. Hardware:
    a. Hardware for Fire-Rated Units: As required for listing.
    b. Hinges for Non-Fire-Rated Units: Concealed continuous piano hinge.
    c. Ceiling Latch/Lock: Screw driver slot for quarter turn cam latch.
    d. Wall Latch/Lock: Cylinder lock-operated cam latch, two keys for each unit.

2.4 FABRICATION

A. General: Provide access door and frame assemblies manufactured as integral units ready for installation.
B. Metal Surfaces: For metal surfaces exposed to view in the completed work, provide materials with smooth, flat surfaces without blemishes. Do not use materials with exposed pitting, seam marks, roller marks, rolled trade names, or roughness.
C. Doors and Frames: Grind exposed welds smooth and flush with adjacent surfaces. Furnish mounting holes, attachment devices and fasteners of type required to secure access doors to types of supports indicated.
D. Latch and Lock Hardware: Furnish number of latches and locks required to hold doors tightly closed

2.5 FINISHES

A. Comply with NAAMM AMP 500-06 Metal Finishes Manual for Architectural and Metal Products for recommendations for applying and designating finishes.
B. Protect mechanical finishes on exposed surfaces from damage by applying a strippable, temporary protective covering before shipping.
C. Appearance of Finished Work: Noticeable variations in same piece are not acceptable. Variations in appearance of adjoining components are acceptable if they are within the range of approved Samples and are assembled or installed to minimize contrast.
D. Factory Primed: Apply manufacturer's standard, lead- and chromate-free, universal primer immediately after surface preparation and pretreatment.
E. Stainless Steel Finishes:
    1. Surface Preparation: Remove tool and die marks and stretch lines, or blend into finish.
    2. Polished Finish: ASTM A480/A480M No. 4 finish. Grind and polish surfaces to produce uniform finish, free of cross scratches.
        a. Run grain of directional finishes with long dimension of each piece.
        b. When polishing is completed, passivate and rinse surfaces. Remove embedded foreign matter and leave surfaces chemically clean.

PART 3 EXECUTION

3.1 EXAMINATION

A. Verify that rough openings are correctly sized and located.
B. Begin installation only after substrates have been properly prepared, and if the responsibility of another installer, notify Architect of unsatisfactory preparation before proceeding.

3.2 PREPARATION

A. Clean surfaces thoroughly prior to proceeding with this work.
B. Prepare surfaces using methods recommended by manufacturer for applicable substrates in accordance with project conditions.

3.3 INSTALLATION

A. Install units in accordance with manufacturer's instructions.
B. Install frames plumb and level in openings, and secure units rigidly in place.
C. Position units to provide convenient access to concealed equipment when necessary.

3.4 FIELD QUALITY CONTROL

A. Inspection Agency: Engage a qualified inspector to perform inspections and to furnish reports to Architect.
B. Inspections:
   1. Fire-Rated Door Inspections: Inspect each fire-rated access door in accordance with NFPA 80, Section 5.2.
C. Repair or remove and replace installations where inspections indicate that they do not comply with specified requirements.
D. Reinspect repaired or replaced installations to determine if replaced or repaired door assembly installations comply with specified requirements.
E. Prepare and submit separate inspection report for each fire-rated access door indicating compliance with each item listed in NFPA 80.

3.5 ADJUSTING

A. Adjust doors and hardware, after installation, for proper operation.
B. Remove and replace doors and frames that are warped, bowed, or otherwise damaged.

END OF SECTION

SECTION 083323 - OVERHEAD COILING DOORS

PART 1 GENERAL

2.1 SECTION INCLUDES

A. Exterior coiling doors.
B. Electric operators and control stations.
C. Wiring from electric circuit disconnect to operators and control stations.

2.2 REFERENCE STANDARDS

A. ASTM A36/A36M - Standard Specification for Carbon Structural Steel; 2019.
B. ASTM A123/A123M - Standard Specification for Zinc (Hot-Dip Galvanized) Coatings on Iron and Steel Products; 2024.
C. ASTM A653/A653M - Standard Specification for Steel Sheet, Zinc-Coated (Galvanized) or Zinc-Iron Alloy-Coated (Galvannealed) by the Hot-Dip Process; 2025.
D. ASTM E84 - Standard Test Method for Surface Burning Characteristics of Building Materials; 2026.
E. ASTM E90 - Standard Test Method for Laboratory Measurement of Airborne Sound Transmission Loss of Building Partitions and Elements; 2023.
F. ASTM E283/E283M - Standard Test Method for Determining Rate of Air Leakage Through Exterior Windows, Skylights, Curtain Walls, and Doors Under Specified Pressure Differences Across the Specimen; 2019.
G. ASTM E413 - Classification for Rating Sound Insulation; 2022.
H. ITS (DIR) - Directory of Listed Products; Current Edition.
I. NEMA EN 10250 - Enclosures for Electrical Equipment (1000 Volts Maximum); 2024.
J. NEMA ICS 2 - Industrial Control and Systems Controllers, Contactors and Overload Relays Rated 600 Volts; 2008 (Reaffirmed 2020).
K. NEMA MG 00001 - Motors and Generators; 2024.
L. UL (DIR) - Online Certifications Directory; Current Edition.
M. UL 325 - Standard for Door, Drapery, Gate, Louver, and Window Operators and Systems; Current Edition, Including All Revisions.

2.3 SUBMITTALS

A. See Section 013000 - Administrative Requirements for submittal procedures.
B. Product Data: Provide general construction, electrical equipment, and component connections and details.
C. Shop Drawings: Indicate pertinent dimensioning, anchorage methods, hardware locations, and installation details.
D. Manufacturer's Installation Instructions: Indicate installation sequence and procedures, adjustment and alignment procedures.
E. Certifications:
   1. Provide certification from an accredited acoustical testing laboratory of product compliance certifying STC rating. Assembly shall have been tested in accordance with Laboratory Sound Transmission Loss, ASTM E90 and STC determination ASTM E413.
F. Manufacturer's qualification statement.
G. Installer's qualification statement.
H. Maintenance Data: Indicate lubrication requirements and frequency and periodic adjustments required.
I. Specimen warranty.

2.4 QUALITY ASSURANCE

A. Manufacturer Qualifications: Company specializing in manufacturing the products specified in this section with minimum 10 years of documented experience.
B. Installer Qualifications: Company specializing in performing work of type specified and with at least 5 years documented experience.
C. Products Requiring Electrical Connection: Listed and classified by ITS (DIR), UL (DIR), or testing firm acceptable to authorities having jurisdiction as suitable for purpose specified and indicated.

2.5 WARRANTY

A. See Section 017800 - Closeout Submittals for additional warranty requirements.
B. Manufacturer Warranty: Provide 2-year manufacturer warranty for roller shaft counterbalance assembly. Complete forms in Owner's name and register with manufacturer.

PART 2 PRODUCTS

3.1 MANUFACTURERS

A. Overhead Coiling Doors: Basis-of-Design
   1. Substitutions: See Section 016000 - Product Requirements.
B. Overhead Coiling Acoustical Doors - 34 STC:
   1. McKeon: IS3000-STC34: www.mckeondoor.com/#sle.
C. Source Limitations: Obtain overhead coiling doors from single source from single manufacturer.
   1. Obtain operators and controls from overhead coiling door manufacturer.

3.2 COILING DOORS

A. Exterior Coiling Doors: Steel slat curtain.
   1. Capable of withstanding positive and negative wind loads of 20 psf without undue deflection or damage to components.
   2. Seismic Performance: Overhead coiling doors shall withstand the effects of earthquake motions determined according to the California Building Code.
      a. Component Importance Factor: 1.0.
   3. Sandwich Slats: Manufacturer's standard, with core of acoustical insulation.
   4. Air Infiltration: Maximum rate of 1.0 CFM per square foot at 1.57 psf when tested according to ASTM E283/E283M, and in compliance with the International Energy Conservation Code (IECC). Table C402.5.2
   5. Slats and insulation shall have a maximum flame spread index of 75 and a maximum smoke developed index of 450 when tested according to ASTM E84.
   6. Nominal Slat Size: 3 inches wide by required length.
   7. Sound Transmission Class (STC) Rating of Door and Frame Assembly: STC of 34, minimum, calculated in accordance with ASTM E413, and tested in accordance with ASTM E90.
   8. Finish: Factory painted, Baked-Enamel or Powder-Coated Finish. Color as indicated on Drawings, or if not indicated, custom color to match Architect's sample.
      a. Interior Curtain-Slat Facing: Match finish of exterior curtain-slat face.
   9. Hood Enclosure: Manufacturer's standard; galvanized steel.
   10. Electric operation.
   11. Mounting: As indicated on drawings.

3.3 MATERIALS

A. Metal Curtain Construction: Interlocking slats.
   1. Curtain Bottom for Slat Curtains: Fitted with angles to provide reinforcement and positive contact in closed position.
      a. Bottom bar shall be provided with continuous form fitted acoustical seals.

2. Weatherstripping for Exterior Doors: Moisture and rot proof, resilient type, located at jamb edges, bottom of curtain, and where curtain enters hood enclosure of exterior doors.
3. Steel Slats: Minimum thickness, 20 gauge, .0375 inch; ASTM A653/A653M galvanized steel sheet.
   a. Galvanizing: Minimum G90 coating.
4. Acoustical Seals: Provide acoustical seals as required for STC rating.

B. Guides - Angle: ASTM A36/A36M metal angles, size as required for wind loading.
   1. Hot-dip galvanized in compliance with ASTM A123/A123M.

C. Hood Enclosure and Trim: Form sheet metal hood to entirely enclose coiled curtain and operating mechanism at opening head. Contour to fit end brackets to which hood is attached. Roll and reinforce top and bottom edges for stiffness. Form closed ends for surface-mounted hoods and fascia for any portion of between-jamb mounting that projects beyond wall face. Equip hood with intermediate support brackets as required to prevent sagging.
   1. Minimum thickness; 22 gauge, .0299 inch.
   2. Removable Metal Soffit: Formed or extruded from same metal and with same finish as curtain if hood is mounted above ceiling unless otherwise indicated.
   3. Sound Baffle: Provide self adjusting internal sound baffle with integral external acoustical seals as required to maintain the STC rating.

D. Bottom Bar: Two angles, each not less than 1 1/2 by 1 1/2 by 1/8 inch thick; fabricated from hot-dip galvanized steel and finished to match door.

E. Lock Hardware:
   1. Cylindrical Locking Mechanism: Latchset lock cylinder, specified in Section 087100.
   2. Latching Mechanism: Inside mounted, adjustable keeper, spring activated latch bar feature to keep in locked or retracted position.
   3. Manual Chain Lift: Provide padlockable chain keeper on guide.
   4. Safety Interlock Switch: Equip power-operated doors with safety interlock switch to disengage power supply when door is locked.

F. Roller Shaft Counterbalance: Steel pipe and helical steel spring system, capable of producing torque sufficient to ensure smooth operation of curtain from any position and capable of holding position at mid-travel; with adjustable spring tension; requiring 25 lb nominal force to operate.

G. Curtain Accessories: Equip door with air- and weather-seals and automatic closing device.

3.4 ELECTRIC OPERATION

A. Operator, Controls, Actuators, and Safeties: Comply with UL 325; provide products listed by ITS (DIR), UL (DIR), or testing agency acceptable to authorities having jurisdiction.
   1. Provide interlock switches on motor operated units.

B. Electric Operators: components, devices, and accessories listed and labeled as defined in NFPA 70, by a qualified testing agency, and marked for intended location and application.
   1. Mounting: Side mounted.
   2. Motor Enclosure:
      a. Exterior Coiling Doors: NEMA MG 00001, Type 4; totally enclosed fan cooled (TEFC).
   3. Motor Rating: Manufacturer recommened for size and conditions indicated; continuous duty.
   4. Motor Voltage: 120 volts, single phase, 60 Hz.
   5. Motor Controller: NEMA ICS 2, full voltage, reversing magnetic motor starter.
   6. Controller Enclosure: NEMA EN 10250, Type 4.
   7. Opening Speed: 12 inches per second.
   8. Brake: Manufacturer's standard type, activated by motor controller.
   9. Manual override in case of power failure.

C. Control Station: Provide standard three button, 'Open-Close-Stop' momentary-contact control device for each operator complying with UL 325.
   1. 24 volt circuit.
   2. Surface mounted, at interior as directed by Architect.
   3. Entrapment Protection Devices: Provide sensing devices and safety mechanisms complying with UL 325.

a. Primary Device: Provide electric sensing edge, wireless sensing, NEMA 1 photo eye sensors, or NEMA 4X photo eye sensors as required with momentary-contact control device.

D. Safety Edge: Located at bottom of coiling door, full width, electro-mechanical sensitized type, wired to stop and reverse door direction upon striking object, hollow neoprene covered.

PART 3 EXECUTION

4.1 EXAMINATION

A. Verify that adjacent construction is suitable for door installation.
B. Verify that electrical services have been installed and are accessible.
C. Verify that door opening is plumb, header is level, and dimensions are correct.
D. Notify Architect of any unacceptable conditions or varying dimensions.
E. Commencement of installation indicates acceptance of substrate and door opening conditions.

4.2 INSTALLATION

A. Install units in accordance with manufacturer's instructions.
B. Power-Operated Doors: Install according to UL 325.
C. Use anchorage devices to securely fasten assembly to wall construction and building framing without distortion or stress.
D. Securely and rigidly brace components suspended from structure. Secure guides to structural members only.
E. Fit and align assembly including hardware; level and plumb, to provide smooth operation.
F. Complete wiring from disconnect to unit components.
G. Install enclosure and perimeter trim.
H. Accessibility: Install overhead coiling doors, switches, and controls along accessible routes in compliance with regulatory requirements for accessibility.

4.3 STARTUP SERVICE

A. Engage a factory-authorized service representative to perform startup service.
   1. Complete installation and startup checks according to manufacturer's written instructions.
   2. Test and adjust controls and safety devices. Replace damaged and malfunctioning controls and equipment.
   3. Test door closing when activated by detector or alarm-connected automatic-closing system. Reset door-closing mechanism after successful test.

4.4 TOLERANCES

A. Maintain dimensional tolerances and alignment with adjacent work.
B. Maximum Variation From Plumb: 1/16 inch.
C. Maximum Variation From Level: 1/16 inch.
D. Longitudinal or Diagonal Warp: Plus or minus 1/8 inch per 10 feet straight edge.

4.5 ADJUSTING, CLEANING, AND PROTECTION

A. Adjust operating assemblies for smooth and noiseless operation.
B. Clean installed components.
C. Remove labels and visible markings.
D. Adjust seals to provide tight fit around entire perimeter.
E. Lubricate bearings and sliding parts as recommended by manufacturer.
F. See Section 017000 - Execution and Closeout Requirements for additional requirements.

4.6 MAINTENANCE SERVICE

A. Initial Maintenance Service: Beginning at Substantial Completion, maintenance service shall include 12 months' full maintenance by skilled employees of coiling-grille Installer. Include monthly preventive maintenance, repair or replacement of worn or defective components, lubrication, cleaning, and adjusting as required for grille operation. Parts and supplies shall be manufacturer's authorized replacement parts and supplies.

1. Perform maintenance, including emergency callback service, during normal working hours.
2. Include 24 hour per day, 7 day per week, emergency callback service.

4.7 DEMONSTRATION

A. Engage a factory authorized service representative to train Owner's maintenance personnel to adjust, operate, and maintain overhead coiling doors.

END OF SECTION

SECTION 085113 - ALUMINUM WINDOWS

PART 1 GENERAL

1.1 SECTION INCLUDES

A. Extruded aluminum windows with fixed sash.
B. Factory glazing.

1.2 REFERENCE STANDARDS

A. AAMA/WDMA/CSA 101/I.S.2/A440 - North American Fenestration Standard/Specification for Windows, Doors, and Skylights; 2022, with Errata (2023).
B. AAMA CW-10 - Care and Handling of Architectural Aluminum from Shop to Site; 2015.
C. AAMA 502 - Voluntary Specification for Field Testing of Newly Installed Fenestration Products; 2021.
D. AAMA 609 & 610 - Cleaning and Maintenance Guide for Architecturally Finished Aluminum; 2025.
E. AAMA 611 - Specification for Anodized Architectural Aluminum; 2026.
F. ASHRAE Std 90.1 I-P - Energy Standard for Buildings Except Low-Rise Residential Buildings; Most Recent Edition Adopted by Authority Having Jurisdiction, Including All Applicable Amendments and Supplements.
G. ASTM B209/B209M - Standard Specification for Aluminum and Aluminum-Alloy Sheet and Plate; 2021a.
H. ASTM B221 - Standard Specification for Aluminum and Aluminum-Alloy Extruded Bars, Rods, Wire, Profiles, and Tubes; 2021.
I. ASTM B221M - Standard Specification for Aluminum and Aluminum-Alloy Extruded Bars, Rods, Wire, Profiles, and Tubes (Metric); 2021.
J. ASTM E283/E283M - Standard Test Method for Determining Rate of Air Leakage Through Exterior Windows, Skylights, Curtain Walls, and Doors Under Specified Pressure Differences Across the Specimen; 2019.
K. ASTM E329 - Standard Specification for Agencies Engaged in Construction Inspection, Testing, or Special Inspection; 2025a.
L. ASTM E331 - Standard Test Method for Water Penetration of Exterior Windows, Skylights, Doors, and Curtain Walls by Uniform Static Air Pressure Difference; 2000 (Reapproved 2023).
M. ASTM E783 - Standard Test Method for Field Measurement of Air Leakage Through Installed Exterior Windows and Doors; 2002 (Reapproved 2018).
N. ASTM E1105 - Standard Test Method for Field Determination of Water Penetration of Installed Exterior Windows, Skylights, Doors, and Curtain Walls, by Uniform or Cyclic Static Air Pressure Difference; 2015 (Reapproved 2023).

1.3 ADMINISTRATIVE REQUIREMENTS

A. Preinstallation Meeting: Convene 1 week before starting work of this section.

1.4 COORDINATION

A. Coordinate window system with sealants, flashings, accessories, trim, parapets, wall cladding, air/weather barriers, and other adjoining work, whether indicated or not, to provide a complete, secure, noncorrosive, and air- and water-tight installation.
B. Coordinate installation of window system anchorage items to be embedded in or attached to other construction without delaying the Work. Provide coordination drawings, templates, instructions, and directions for installation.
C. Coordinate installation of weep system associated with the ADA-compliant threshold, whether indicated or not, with Division 22 Section(s) and/or Division 32 Section(s) to comply with performance requirements.

1.5 SUBMITTALS

A. See Section 013000 - Administrative Requirements for submittal procedures.

B. Product Data: Include component dimensions, information on glass and glazing, and internal drainage details.

C. Shop Drawings: Indicate opening dimensions, elevations of different types, framed opening tolerances, anchorage locations, and installation requirements.

D. Grade Substantiation: Prior to submitting shop drawings or starting fabrication, submit one of the following showing compliance with specified grade:

1. Evidence of AAMA Certification.
2. Evidence of WDMA Certification.
3. Evidence of CSA Certification.
4. Test report(s) by independent testing agency itemizing compliance and acceptable to authorities having jurisdiction.

E. Test Reports: Prior to submitting shop drawings or starting fabrication, submit test report(s) by independent testing agency showing compliance with performance requirements in excess of those prescribed by specified grade.

F. Manufacturer's Installation Instructions: Include complete preparation, installation, and cleaning requirements.

G. Field Quality Control Submittals: Report of field testing for water penetration and air leakage.

H. Manufacturer's qualification statement.

I. Specimen warranty.

1.6 QUALITY ASSURANCE

A. Manufacturer Qualifications: Company specializing in manufacturing products specified in this section with minimum 5 years of documented experience.

B. Installer Qualifications: Company specializing in performing work of type specified and with at least 3 years of documented experience.

C. Testing Agency Qualifications: Qualified in accordance with ASTM E329 for testing indicated and acceptable to Owner and Architect.

D. Product Options: Information on drawings and in specifications establishes requirements for aesthetic effects and performance characteristics of assemblies. Aesthetic effects are indicated by dimensions, arrangements, alignment, and profiles of components and assemblies as they relate to sightlines, to one another, and to adjoining construction.

1. Do not change intended aesthetic effects, as judged solely by Architect, except with Architect's approval. If changes are proposed, submit comprehensive explanatory data to Architect for review.

1.7 DELIVERY, STORAGE, AND HANDLING

A. Comply with requirements of AAMA CW-10.

B. Protect finished surfaces with wrapping paper or strippable coating during installation. Do not use adhesive papers or sprayed coatings that bond to substrate when exposed to sunlight or weather.

1.8 FIELD CONDITIONS

A. Do not install sealants when ambient temperature is less than 40 degrees F.

B. Maintain this minimum temperature during and 24 hours after installation of sealants.

1.9 WARRANTY

A. See Section 017800 - Closeout Submittals for additional warranty requirements.

B. Manufacturer Warranty: Provide 5 year manufacturer warranty against failure of glass seal on insulating glass units, including interpane dusting or misting. Include provision for replacement of failed units. Complete forms in Owner's name and register with manufacturer.

C. Manufacturer Warranty: Provide 10-year manufacturer warranty against excessive degradation of exterior finish. Include provision for replacement of units with excessive fading, chalking, or flaking. Complete forms in Owner's name and register with manufacturer.

PART 2 PRODUCTS

2.1 MANUFACTURERS

A. Basis of Design Manufacturer: Subject to compliance with requirements, provide aluminum window units by the following:

2.2 BASIS OF DESIGN - AW PERFORMANCE CLASS WINDOWS

A. Grade: AAMA/WDMA/CSA 101/I.S.2/A440 having Performance Class of AW, and Performance Grade at least as high as specified design pressure.
B. Fixed, Thermally-Broken:
   1. Basis of Design: Arcadia, Inc; 77 STC Series: www.arcadiainc.com/#sle.

2.3 ALUMINUM WINDOWS

A. Aluminum Windows: Extruded aluminum frame and sash, factory fabricated, factory finished, with operating hardware, related flashings, and anchorage and attachment devices.
   1. Fabrication: Joints and corners flush, hairline, and weatherproof, accurately fitted and secured; prepared to receive anchors; fasteners and attachments concealed from view; reinforced as required for operating hardware and imposed loads.
   2. Perimeter Clearance: Minimize space between framing members and adjacent construction while allowing expected movement.
   3. Movement: Accommodate movement between window and perimeter framing and deflection of lintel, without damage to components or deterioration of seals.
   4. System Internal Drainage: Drain to the exterior by means of a weep drainage network any water entering joints, condensation occurring in glazing channel, and migrating moisture occurring within system.
B. Fixed, Non-Operable Type:
   1. Construction: Thermally broken.
   2. Glazing: Double; clear; low-e. Manufacturer glazed to provide STC requirement.
   3. Exterior Finish: Class I natural anodized.
   4. Interior Finish: Class I natural anodized.

2.4 PERFORMANCE REQUIREMENTS

A. Grade: AAMA/WDMA/CSA 101/I.S.2/A440 requirements for specific window type:
   1. Performance Class (PC): R.
B. Design Pressure (DP): In accordance with applicable codes.
C. Water Leakage: No uncontrolled leakage on interior face when tested in accordance with ASTM E331 at differential pressure of 12.11 psf.
D. Air Leakage: 0.1 cfm/sq ft maximum leakage per unit area of outside window frame dimension when tested at 1.57 psf pressure difference in accordance with ASTM E283/E283M.
E. Fenestration Assembly Thermal Transmittance (U-value): Comply with ASHRAE Std 90.1 I-P for building envelope requirements for applicable climate zone.

2.5 MATERIALS

A. Extruded Aluminum: ASTM B221 (ASTM B221M), 6063 alloy, T6 temper.
B. Sheet Aluminum: ASTM B209/B209M, 5005 alloy, H12 or H14 temper.

2.6 FINISHES

A. Class I Natural Anodized Finish: AAMA 611 AA-M12C22A41, clear anodic coating not less than 0.7 mil thick.

PART 3 EXECUTION

3.1 EXAMINATION

A. Verify that wall openings and adjoining water-resistive barrier materials are ready to receive aluminum windows.

3.2 PRIME WINDOW INSTALLATION

A. Install windows in accordance with manufacturer's instructions.
B. Attach window frame and shims to perimeter opening to accommodate construction tolerances and other irregularities.
C. Align window plumb and level, free of warp or twist. Maintain dimensional tolerances and alignment with adjacent work.
D. Install sill and sill end angles.
E. Provide thermal isolation where components penetrate or disrupt building insulation. Pack fibrous insulation in shim spaces at perimeter of assembly to maintain continuity of thermal barrier.

3.3 TOLERANCES

A. Maximum Variation from Level or Plumb: 1/16 inches every 3 ft non-cumulative or 1/8 inches per 10 ft, whichever is less.

3.4 FIELD QUALITY CONTROL

A. See Section 014000 - Quality Requirements for independent field testing and inspection requirements, and requirements for monitoring quality of specified product installations.
B. Provide field testing of installed aluminum windows by independent laboratory in accordance with AAMA 502 and AAMA/WDMA/CSA 101/I.S.2/A440 during construction process and before installation of interior finishes.
   1. Field test for water penetration in accordance with ASTM E1105 using Procedure B - cyclic static air pressure difference; test pressure shall not be less than 1.9 psf.
   2. Field test for air leakage in accordance with ASTM E783 with uniform static air pressure difference of 1.57 psf.
C. Repair or replace fenestration components that have failed designated field testing, and retest to verify performance complies with specified requirements.

3.5 CLEANING

A. Remove protective material from factory finished aluminum surfaces.
B. Wash surfaces by method recommended and acceptable to window manufacturer; rinse and wipe surfaces clean.
C. Upon completion of installation, thoroughly clean aluminum surfaces in accordance with AAMA 609 & 610.
D. Remove excess glazing sealant by moderate use of mineral spirits or other solvent acceptable to sealant and window manufacturer.

END OF SECTION

SECTION 085115 - ALUMINUM ACOUSTICAL WINDOWS

PART 1 GENERAL

1.1 SECTION INCLUDES

A. Factory finished aluminum windows.
B. Factory-installed glazing .

1.2 REFERENCE STANDARDS

A. ASTM B221 - Standard Specification for Aluminum and Aluminum-Alloy Extruded Bars, Rods, Wire, Profiles, and Tubes; 2021.
B. ASTM B221M - Standard Specification for Aluminum and Aluminum-Alloy Extruded Bars, Rods, Wire, Profiles, and Tubes (Metric); 2021.
C. ASTM E90 - Standard Test Method for Laboratory Measurement of Airborne Sound Transmission Loss of Building Partitions and Elements; 2023.
D. ASTM E1332 - Standard Classification for Rating Outdoor-Indoor Sound Attenuation; 2022.

1.3 SUBMITTALS

A. See Section 013000 - Administrative Requirements for submittal procedures.
B. Product Data: Provide component dimensions, fasteners, anchors, and glass.
C. Shop Drawings: Indicate opening dimensions, framed opening tolerances, affected related work; installation requirements.
D. Certificates: Certify that products of this section meet or exceed specified requirements.
E. Test Reports: Prior to submitting shop drawings or starting fabrication, submit test report(s) by independent testing agency showing compliance with performance requirements.
F. Manufacturer's Qualification Statement.
G. Installer's Qualification Statement.
H. Warranty: Submit manufacturer warranty and ensure that forms have been completed in Owner's name and registered with manufacturer.

1.4 QUALITY ASSURANCE

A. Manufacturer Qualifications: Company specializing in manufacturing windows specified in this section, with not less than 10 years of documented experience.
B. Installer Qualifications: Company specializing in performing work of the type specified and with at least 3 years of documented experience and approved by manufacturer.

1.5 DELIVERY, STORAGE, AND HANDLING

A. Protect factory finished surfaces with wrapping. Do not use adhesive papers or sprayed coatings that bond when exposed to sunlight or weather.

1.6 FIELD CONDITIONS

A. Maintain this minimum temperature during and after installation of sealants.

1.7 WARRANTY

A. See Section 017800 - Closeout Submittals for additional warranty requirements.
B. Correct defective Work within a 5 year period after Date of Substantial Completion.
C. Provide 5 year manufacturer warranty for insulated glass units from seal failure, interpane dusting or misting, and replacement of same.

PART 2 PRODUCTS

2.1 MANUFACTURERS

A. Sound Control Aluminum Windows:
   1. IAC Acoustics; Noise-Lock Acoustic Windows: www.iacacoustics.com/#sle.
   2. Noise Barriers; QuietLite Sound Control Windows: www.noisebarriers.com/#sle.

2.2 ALUMINUM ACOUSTICAL WINDOWS

A. Prefabricated Sound Control Windows: Dual glazed, Two laminated glass units with air cavity. Angled & Flat installed.
   1. Construction: Manufacturer's standard.
   2. Framing Material: Anodized Aluminum.
   3. Size: As indicated on drawings.
   4. Glazing: Manufacturer's standard to meet STC requirement.

2.3 PERFORMANCE REQUIREMENTS

A. Acoustic Performance: Minimum outdoor-indoor transmission class (OITC) rating of 60, when tested in accordance with ASTM E90 and ASTM E1332.

2.4 COMPONENTS

A. Acoustic Frames: 2 inch by 6 3/8 inch deep profile; reinforced and filled with sound-absorbing fill; mitered inside and outside corners; removable flush glass stops with concealed fasteners.
B. Acoustic Seals for Glazing: Vibration-isolating resilient gaskets and closed-cell polyethylene foam glazing tape.

2.5 MATERIALS

A. Extruded Aluminum: ASTM B221 (ASTM B221M), 6063 alloy, T6 temper.

2.6 FABRICATION

A. Arrange fasteners to conceal from view.
B. Factory-glaze window units.

PART 3 EXECUTION

3.1 INSTALLATION

A. Install window frames and glass and glazing in accordance with manufacturers instructions.
B. Attach window frame and shims to perimeter opening to accommodate construction tolerances and other irregularities.
C. Align window plumb and level, free of warp or twist. Maintain dimensional tolerances and alignment with adjacent work.

3.2 FIELD QUALITY CONTROL

A. Provide services of window manufacturer's field representative to observe for proper installation of system and submit report.

3.3 ADJUSTING

A. Adjust hardware for smooth operation and secure weathertight closure.

3.4 CLEANING

A. Remove protective material from factory finished surfaces.
B. Remove labels and visible markings.
C. Wash surfaces by method recommended and acceptable to window manufacturer; rinse and wipe surfaces clean.

3.5 PROTECTION

A. Do not permit continuing construction activities near unprotected finish surfaces.

END OF SECTION

SECTION 087100 - DOOR HARDWARE

PART 1 GENERAL

1.1 RELATED DOCUMENTS

A. Drawings and general provisions of the Contract, including General and Supplementary Conditions and Division 1 Specification Sections, apply to this Section.

1.2 SUMMARY

A. This Section includes commercial door hardware for the following:
   1. Swinging doors.
B. Door hardware includes, but is not necessarily limited to, the following:
   1. Mechanical door hardware.
   2. Electromechanical door hardware.
   3. Cylinders specified for doors in other sections.
C. Related Sections:
   1. Division 01 Section "General Conditions”.
   2. Division 08 Section “Hollow Metal Doors and Frames”.
   3. Division 26 Section "Electrical”
D. Codes and References: Comply with the version adopted by the Authority Having Jurisdiction.
   1. ANSI A117.1 - Accessible and Usable Buildings and Facilities.
   2. ICC/IBC - International Building Code.
   3. NFPA 70 - National Electrical Code.
   4. NFPA 80 - Fire Doors and Windows.
   5. NFPA 101 - Life Safety Code.
   6. NFPA 105 - Installation of Smoke Door Assemblies.
   7. State Building Codes, Local Amendments.
E. Standards: All hardware specified herein shall comply with the following industry standards as applicable. Any undated reference to a standard shall be interpreted as referring to the latest edition of that standard:
   1. ANSI/BHMA Certified Product Standards - A156 Series.
   2. UL10C - Positive Pressure Fire Tests of Door Assemblies.
   3. ANSI/UL 294 - Access Control System Units.
   4. UL 305 - Panic Hardware.
   5. ANSI/UL 437- Key Locks.

1.3 SUBMITTALS

A. Product Data: Manufacturer's product data sheets including installation details, material descriptions, dimensions of individual components and profiles, operational descriptions and finishes.
B. Door Hardware Schedule: Prepared by or under the supervision of supplier, detailing, fabrication and assembly of door hardware, as well as procedures and diagrams. Coordinate the final Door Hardware Schedule with doors, frames, and related work to ensure proper size, thickness, hand, function, and finish of door hardware.
   1. Format: Comply with scheduling sequence and vertical format in DHI's "Sequence and Format for the Hardware Schedule."
   2. Organization: Organize the Door Hardware Schedule into door hardware sets indicating complete designations of every item required for each door or opening. Organize door hardware sets in same order as in the Door Hardware Sets at the end of Part 3. Submittals that do not follow the same format and order as the Door Hardware Sets will be rejected and subject to resubmission.
   3. Content: Include the following information:
      a. Type, style, function, size, label, hand, and finish of each door hardware item.
      b. Manufacturer of each item.
      c. Fastenings and other pertinent information.

d. Location of door hardware set, cross-referenced to Drawings, both on floor plans and in door and frame schedule.
e. Explanation of abbreviations, symbols, and codes contained in schedule.
f. Mounting locations for door hardware.
g. Door and frame sizes and materials.
h. Warranty information for each product.

4. Submittal Sequence: Submit the final Door Hardware Schedule at earliest possible date, particularly where approval of the Door Hardware Schedule must precede fabrication of other work that is critical in the Project construction schedule. Include Product Data, Samples, Shop Drawings of other work affected by door hardware, and other information essential to the coordinated review of the Door Hardware Schedule.

C. Shop Drawings: Details of electrified access control hardware indicating the following:

1. Wiring Diagrams: Upon receipt of approved schedules, submit detailed system wiring diagrams for power, signaling, monitoring, communication, and control of the access control system electrified hardware. Differentiate between manufacturer-installed and field-installed wiring. Include the following:

a. Elevation diagram of each unique access controlled opening showing location and interconnection of major system components with respect to their placement in the respective door openings.
b. Complete (risers, point-to-point) access control system block wiring diagrams.
c. Wiring instructions for each electronic component scheduled herein.

2. Electrical Coordination: Coordinate with related sections the voltages and wiring details required at electrically controlled and operated hardware openings.

D. Keying Schedule: After a keying meeting with the owner has taken place prepare a separate keying schedule detailing final instructions. Submit the keying schedule in electronic format. Include keying system explanation, door numbers, key set symbols, hardware set numbers and special instructions. Owner must approve submitted keying schedule prior to the ordering of permanent cylinders/cores.

E. Proof of Compliance: (California located Projects): Provide a list of product(s) containing chemicals known to cause cancer or reproductive toxicity as defined by the Office of Environmental Health Hazard Assessment (OEHHA) under Proposition 65 (CA Code of Regulations, Title 27, Section 27001). The list includes the specific chemical(s), if the chemical will be exposed to consumers, the means of warning, and an illustration of the label.

F. Informational Submittals:

1. Product Test Reports: Indicating compliance with cycle testing requirements, based on evaluation of comprehensive tests performed by manufacturer and witnessed by a qualified independent testing agency.

1.4 CLOSEOUT SUBMITTALS

A. Operating and Maintenance Manuals: Provide manufacturers operating and maintenance manuals for each item comprising the complete door hardware installation in quantity as required in Division 01, Closeout Procedures.

B. Project Record Documents: Provide record documentation of as-built door hardware sets in digital format (.pdf, .docx, .xlsx, .csv) and as required in Division 01, Project Record Documents.

1.5 QUALITY ASSURANCE

A. Manufacturers Qualifications: Engage qualified manufacturers with a minimum 5 years of documented experience in producing hardware and equipment similar to that indicated for this Project and that have a proven record of successful in-service performance.

B. Certified Products: Where specified, products must maintain a current listing in the Builders Hardware Manufacturers Association (BHMA) Certified Products Directory (CPD).

C. Installer Qualifications: A minimum 3 years documented experience installing both standard and electrified door hardware similar in material, design, and extent to that indicated for this Project and whose work has resulted in construction with a record of successful in-service performance.

D. Door Hardware Supplier Qualifications: Experienced commercial door hardware distributors with a minimum 5 years documented experience supplying both mechanical and electromechanical hardware installations comparable in material, design, and extent to that indicated for this Project. Supplier recognized as a factory direct distributor by the manufacturers of the primary materials with a warehousing

facility in Project's vicinity. Supplier to have on staff a certified Architectural Hardware Consultant (AHC) available during the course of the Work to consult with Contractor, Architect, and Owner concerning both standard and electromechanical door hardware and keying.

E. Source Limitations: Obtain each type and variety of door hardware specified in this section from a single source unless otherwise indicated.
   1. Electrified modifications or enhancements made to a source manufacturer's product line by a secondary or third party source will not be accepted.
   2. Provide electromechanical door hardware from the same manufacturer as mechanical door hardware, unless otherwise indicated.

F. Each unit to bear third party permanent label indicating compliance with the referenced testing standards.

G. Keying Conference: Conduct conference to comply with requirements in Division 01 Section "Project Meetings." Keying conference to incorporate the following criteria into the final keying schedule document:
   1. Function of building, purpose of each area and degree of security required.
   2. Plans for existing and future key system expansion.
   3. Requirements for key control storage and software.
   4. Installation of permanent keys, cylinder cores and software.
   5. Address and requirements for delivery of keys.

H. Pre-Submittal Conference: Conduct coordination conference in compliance with requirements in Division 01 Section "Project Meetings" with attendance by representatives of Supplier(s), Installer(s), and Contractor(s) to review proper methods and the procedures for receiving, handling, and installing door hardware.
   1. Prior to installation of door hardware, conduct a project specific training meeting to instruct the installing contractors' personnel on the proper installation and adjustment of their respective products. Product training to be attended by installers of door hardware (including electromechanical hardware) for aluminum, hollow metal and wood doors. Training will include the use of installation manuals, hardware schedules, templates and physical product samples as required.
   2. Inspect and discuss electrical roughing-in, power supply connections, and other preparatory work performed by other trades.
   3. Review sequence of operation narratives for each unique access controlled opening.
   4. Review and finalize construction schedule and verify availability of materials.
   5. Review the required inspecting, testing, commissioning, and demonstration procedures

I. At completion of installation, provide written documentation that components were applied according to manufacturer's instructions and recommendations and according to approved schedule.

1.6 DELIVERY, STORAGE AND HANDLING

A. Inventory door hardware on receipt and provide secure lock-up and shelving for door hardware delivered to Project site. Do not store electronic access control hardware, software or accessories at Project site without prior authorization.

B. Tag each item or package separately with identification related to the final Door Hardware Schedule, and include basic installation instructions with each item or package.

C. Deliver, as applicable, permanent keys, cylinders, cores, access control credentials, software and related accessories directly to Owner via registered mail or overnight package service. Instructions for delivery to the Owner shall be established at the "Keying Conference".

1.7 COORDINATION

A. Templates: Obtain and distribute to the parties involved templates for doors, frames, and other work specified to be factory prepared for installing standard and electrified hardware. Check Shop Drawings of other work to confirm that adequate provisions are made for locating and installing hardware to comply with indicated requirements.

B. Door and Frame Preparation: Doors and corresponding frames are to be prepared, reinforced and pre-wired (if applicable) to receive the installation of the specified electrified, monitoring, signaling and access control system hardware without additional in-field modifications.

1.8 WARRANTY

A. General Warranty: Reference Division 01, General Requirements. Special warranties specified in this Article shall not deprive Owner of other rights Owner may have under other provisions of the Contract Documents and shall be in addition to, and run concurrent with, other warranties made by Contractor under requirements of the Contract Documents.

B. Warranty Period: Written warranty, executed by manufacturer(s), agreeing to repair or replace components of standard and electrified door hardware that fails in materials or workmanship within specified warranty period after final acceptance by the Owner. Failures include, but are not limited to, the following:
   1. Structural failures including excessive deflection, cracking, or breakage.
   2. Faulty operation of the hardware.
   3. Deterioration of metals, metal finishes, and other materials beyond normal weathering.
   4. Electrical component defects and failures within the systems operation.

C. Warranty Period: Unless otherwise indicated, warranty shall be one year from date of Substantial Completion.

PART 2 PRODUCTS

2.1 MATERIALS

A. Hardware shall not have any visible manufacturer names on exposed materials, except cylinders, when the door is in a closed position.

2.2 BUTT HINGES

A. Hinges: ANSI/BHMA A156.1 butt hinges with number of hinge knuckles and other options as specified in the Door Hardware Sets.
   1. Quantity: Provide the following hinge quantity:
      a. Two Hinges: For doors with heights up to 60 inches.
      b. Three Hinges: For doors with heights 61 to 90 inches.
      c. Four Hinges: For doors with heights 91 to 120 inches.
      d. For doors with heights more than 120 inches, provide 4 hinges, plus 1 hinge for every 30 inches of door height greater than 120 inches.
   2. Hinge Size: Provide the following, unless otherwise indicated, with hinge widths sized for door thickness and clearances required:
      a. Widths up to 3’0”: 4-1/2” standard or heavy weight as specified.
      b. Sizes from 3’1” to 4’0”: 5” standard or heavy weight as specified.
   3. Hinge Weight and Base Material: Unless otherwise indicated, provide the following:
      a. Exterior Doors: Heavy weight, non-ferrous, ball bearing or oil impregnated bearing hinges unless Hardware Sets indicate standard weight.
      b. Interior Doors: Standard weight, steel, ball bearing or oil impregnated bearing hinges unless Hardware Sets indicate heavy weight.
   4. Hinge Options: Comply with the following:
      a. Non-removable Pins: With the exception of electric through wire hinges, provide set screw in hinge barrel that, when tightened into a groove in hinge pin, prevents removal of pin while door is closed; for all out-swinging lockable doors.
   5. Manufacturers:
      a. McKinney (MK) - TA/T4A Series, 5-knuckle.

2.3 POWER TRANSFER DEVICES

A. Electrified Quick Connect Transfer Hinges: Provide electrified transfer hinges with Molex™ standardized plug connectors and sufficient number of concealed wires (up to 12) to accommodate the electrified functions specified in the Door Hardware Sets with a 1-year warranty. Connectors plug directly to through-door wiring harnesses for connection to electric locking devices and power supplies. Wire nut connections are not acceptable.

1. Manufacturers:
    a. McKinney (MK) - QC (# wires) Option.

B. Electric Door Wire Harnesses: Provide electric/data transfer wiring harnesses with standardized plug connectors to accommodate up to twelve (12) wires. Connectors plug directly to through-door wiring harnesses for connection to electric locking devices and power supplies. Provide sufficient number and type of concealed wires to accommodate electric function of specified hardware. Provide a connector for through-door electronic locking devices and from hinge to junction box above the opening. Wire nut connections are not acceptable. Determine the length required for each electrified hardware component for the door type, size and construction, minimum of two per electrified opening.
    1. Provide one each of the following tools as part of the base bid contract:
        a. McKinney (MK) - Electrical Connecting Kit: QC-R001.
        b. McKinney (MK) - Connector Hand Tool: QC-R003.
    2. Manufacturers:
        a. McKinney (MK) - QC-C Series.

2.4 DOOR OPERATING TRIM

A. Flush Bolts and Surface Bolts: Provide products conforming to ANSI/BHMA A156.3 and A156.16, Grade 1.
    1. Flush bolts to be furnished with top rod of sufficient length to allow bolt retraction device location approximately six feet from the floor.
    2. Furnish dust proof strikes for bottom bolts.
    3. Surface bolts to be minimum 8” in length and U.L. listed for labeled fire doors and U.L. listed for windstorm components where applicable.
    4. Provide related accessories (mounting brackets, strikes, coordinators, etc.) as required for appropriate installation and operation.
    5. Manufacturers:
        a. Rockwood (RO).

B. Coordinators: ANSI/BHMA A156.3 door coordinators consisting of active-leaf, hold-open lever and inactive-leaf release trigger. Model as indicated in hardware sets.
    1. Manufacturers:
        a. Rockwood (RO).

C. Door Push Plates and Pulls: ANSI/BHMA A156.6 door pushes and pull units of type and design specified in the Hardware Sets. Coordinate and provide proper width and height as required where conflicting hardware dictates.
    1. Push/Pull Plates: Minimum .050 inch thick, size as indicated in hardware sets, with beveled edges, secured with exposed screws unless otherwise indicated.
    2. Door Pull and Push Bar Design: Size, shape, and material as indicated in the hardware sets. Minimum clearance of 2 1/2-inches from face of door unless otherwise indicated.
    3. Offset Pull Design: Size, shape, and material as indicated in the hardware sets. Minimum clearance of 2 1/2-inches from face of door and offset of 90 degrees unless otherwise indicated.
    4. Pulls shall be provided with a 10” clearance from the finished floor on the push side to accommodate wheelchair accessibility.
    5. Fasteners: Provide manufacturer's designated fastener type as indicated in Hardware Sets. When through-bolt fasteners are in the same location as a push plate, countersink the fasteners flush with the door face allowing the push plate to sit flat against the door.
    6. Manufacturers:
        a. Rockwood (RO).

2.5 CYLINDERS AND KEYING

A. General: Cylinder manufacturer to have minimum (10) years experience designing secured master key systems and have on record a published security keying system policy.
    1. Manufacturers:
        a. Match Existing, Field Verify.

B. Cylinder Types: Original manufacturer cylinders able to supply the following cylinder formats and types:
    1. Threaded mortise cylinders with rings and cams to suit hardware application.
    2. Rim cylinders with back plate, flat-type vertical or horizontal tailpiece, and raised trim ring.

3. Bored or cylindrical lock cylinders with tailpieces as required to suit locks.
4. Tubular deadlocks and other auxiliary locks.
5. Mortise and rim cylinder collars to be solid and recessed to allow the cylinder face to be flush and be free spinning with matching finishes.
6. Keyway: Match Facility Standard.

C. Large Format Interchangeable Cores: Provide removable cores (LFIC) as specified, core insert, removable by use of a special key, and for use with only the core manufacturer's cylinder and door hardware.

D. Keying System: Each type of lock and cylinders to be factory keyed.
1. Supplier shall conduct a "Keying Conference" to define and document keying system instructions and requirements.
2. Furnish factory cut, nickel-silver large bow permanently inscribed with a visual key control number as directed by Owner.
3. Existing System: Field verify and key cylinders to match Owner's existing system.

E. Key Quantity: Provide the following minimum number of keys:
1. Change Keys per Cylinder: Two (2)
2. Master Keys (per Master Key Level/Group): Five (5).
3. Construction Keys (where required): Ten (10).
4. Construction Control Keys (where required): Two (2).
5. Permanent Control Keys (where required): Two (2).

F. Construction Keying: Provide temporary keyed construction cores.

G. Key Registration List (Bitting List):
1. Provide keying transcript list to Owner's representative in the proper format for importing into key control software.
2. Provide transcript list in writing or electronic file as directed by the Owner.

2.6 KEY CONTROL

A. Key Control Cabinet: Provide a key control system including envelopes, labels, and tags with self-locking key clips, receipt forms, 3-way visible card index, temporary markers, permanent markers, and standard metal cabinet. Key control cabinet shall have expansion capacity of 150% of the number of locks required for the project.
1. Manufacturers:
a. Lund Equipment (LU).
b. MMF Industries (MM).
c. Telkee (TK).

B. Electronic Key Management System: Provide an electronic key control system with Stand-alone Plug and Play features including advanced RFID technology. Touchscreen interface with PIN access for keys individually locked in place. Minimum 1,000 system users and 21 iFobs for locking receptors. System shall have a minimum 250,000 audit events screen displayed or ability to be exported via USB port.
1. Manufacturers:
a. Medeco (MC).

2.7 MORTISE LOCKS AND LATCHING DEVICES

A. Mortise Locksets, Grade 1 (Heavy Duty): Provide ANSI/BHMA A156.13, Series 1000, Operational Grade 1 Certified Products Directory (CPD) listed mortise locksets. Listed manufacturers shall meet all functions and features as specified herein.
1. Manufacturers:
a. ASSA ABLOY ACCENTRA (YA) - 8800FL Series.

2.8 CYLINDRICAL LOCKS AND LATCHING DEVICES

A. Cylindrical Locksets, Grade 1 (Commercial Duty): ANSI/BHMA A156.2, Series 4000, Operational Grade 1 Certified Products Directory (CPD) listed cylindrical locksets. Listed manufacturers shall meet all functions and features as specified herein.
1. Electromechanical locksets shall have the following functions and features:

a. Universal Molex plug-in connectors that have standardized color-coded wiring and are field configurable in fail safe or fail secure and operate from 12vdc to 24vdc regulated.
b. Self-contained, continuous duty integral solenoid.
c. One-year limited warranty on electrified functions.

2. Manufacturers:
a. ASSA ABLOY ACCENTRA (YA) 4700LN Series.

2.9 LOCK AND LATCH STRIKES

A. Strikes: Provide manufacturer's standard strike with strike box for each latch or lock bolt, with curved lip extended to protect frame, finished to match door hardware set, unless otherwise indicated, and as follows:
1. Flat-Lip Strikes: For locks with three-piece antifriction latchbolts, as recommended by manufacturer.
2. Extra-Long-Lip Strikes: For locks used on frames with applied wood casing trim.
3. Aluminum-Frame Strike Box: Provide manufacturer's special strike box fabricated for aluminum framing.
4. Double-lipped strikes: For locks at double acting doors. Furnish with retractable stop for rescue hardware applications.

B. Standards: Comply with the following:
1. Strikes for Mortise Locks and Latches: BHMA A156.13.
2. Strikes for Bored Locks and Latches: BHMA A156.2.
3. Strikes for Auxiliary Deadlocks: BHMA A156.36.
4. Dustproof Strikes: BHMA A156.16.

2.10 CONVENTIONAL EXIT DEVICES

A. General Requirements: All exit devices specified herein shall meet or exceed the following criteria:
1. Exit devices shall have a five-year warranty.
2. At doors not requiring a fire rating, provide devices complying with NFPA 101 and listed and labeled for "Panic Hardware" according to UL305. Provide proper fasteners as required by manufacturer including sex nuts and bolts at openings specified in the Hardware Sets.
3. Where exit devices are required on fire rated doors, provide devices complying with NFPA 80 and with UL labeling indicating "Fire Exit Hardware". Provide devices with the proper fasteners for installation as tested and listed by UL. Consult manufacturer’s catalog and template book for specific requirements.
4. Except on fire rated doors, provide exit devices with hex key dogging device to hold the pushbar and latch in a retracted position. Provide optional keyed cylinder dogging on devices where specified in Hardware Sets.
5. Devices must fit flat against the door face with no gap that permits unauthorized dogging of the push bar. The addition of filler strips is required in any case where the door light extends behind the device as in a full glass configuration.
6. Lever Operating Trim: Where exit devices require lever trim, furnish manufacturer's heavy duty escutcheon trim with threaded studs for thru-bolts.
a. Lock Trim Design: As indicated in Hardware Sets, provide finishes and designs to match that of the specified locksets.
b. Where function of exit device requires a cylinder, provide a cylinder (Rim or Mortise) as specified in Hardware Sets.
7. Vertical Rod Exit Devices: Where surface or concealed vertical rod exit devices are used at interior openings, provide as less bottom rod (LBR) unless otherwise indicated. Provide dust proof strikes where thermal pins are required to project into the floor.
8. Narrow Stile Applications: At doors constructed with narrow stiles, or as specified in Hardware Sets, provide devices designed for maximum 2” wide stiles.
9. Dummy Push Bar: Nonfunctioning push bar matching functional push bar.
10. Rail Sizing: Provide exit device rails factory sized for proper door width application.
11. Through Bolt Installation: For exit devices and trim as indicated in Door Hardware Sets.

B. Conventional Push Rail Exit Devices (Heavy Duty): ANSI/BHMA A156.3, Grade 1 Certified Products Directory (CPD) listed exit devices. Listed manufacturers shall meet all functions and features as specified herein.

1. Electromechanical exit devices shall have the following functions and features:
   a. Universal Molex plug-in connectors that have standardized color-coded wiring and are field configurable in fail safe or fail secure and operate from 12vdc to 24vdc regulated.
   b. EcoFlex or equivalent technology that reduces energy consumption up to 92% as certified by GreenCircle.
   c. Options to be available for request-to-exit or enter signaling, latchbolt and touchbar monitoring.
   d. Field configurable electrified trim to fail-safe or fail-secure that operates from 12-24VDC.
   e. Five-year limited warranty for electromechanical features.
2. Manufacturers:
   a. ASSA ABLOY ACCENTRA (YA) - 7000 Series.

2.11 SURFACE DOOR CLOSERS

A. All door closers specified herein shall meet or exceed the following criteria:

1. General: Door closers to be from one manufacturer, matching in design and style, with the same type door preparations and templates regardless of application or spring size. Closers to be non-handed with full sized covers.
2. Standards: Closers to comply with UL-10C for Positive Pressure Fire Test and be U.L. listed for use of fire rated doors.
3. Size of Units: Comply with manufacturer's written recommendations for sizing of door closers depending on size of door, exposure to weather, and anticipated frequency of use. Where closers are indicated for doors required to be accessible to the Americans with Disabilities Act, provide units complying with ANSI ICC/A117.1.
4. Closer Arms: Provide heavy duty, forged steel closer arms unless otherwise indicated in Hardware Sets.
5. Closers shall not be installed on exterior or corridor side of doors; where possible install closers on door for optimum aesthetics.
6. Closer Accessories: Provide door closer accessories including custom templates, special mounting brackets, spacers and drop plates as required for proper installation. Provide through-bolt and security type fasteners as specified in the hardware sets.

B. Door Closers, Surface Mounted (Heavy Duty): ANSI/BHMA A156.4, Grade 1 Certified Products Directory (CPD) listed surface mounted, heavy duty door closers with complete spring power adjustment, sizes 1 thru 6; and fully operational adjustable according to door size, frequency of use, and opening force. Closers to be rack and pinion type, one piece cast iron or aluminum alloy body construction, with adjustable backcheck and separate non-critical valves for closing sweep and latch speed control. Provide non-handed units standard.

1. Heavy duty surface mounted door closers shall have a 30-year warranty.
2. Manufacturers:
   a. ASSA ABLOY ACCENTRA (YA) - 4400 Series.
   b. Norton Rixson (NO) - 7500 Series.

2.12 ARCHITECTURAL TRIM AND ACCESSORIES

A. Door, Frame and Wall Protective Trim: ANSI/BHMA A156.6, protective products as specified in the hardware sets. Door protection plates shall be not more than 2" less than door width on stop side and 1” less door width on the pull side or on stop side of pairs of doors. Listed manufacturers shall meet all functions and features as specified herein.

1. Provide protective trim with functions and features as follows:
   a. Meets ADA requirements for smooth bottom door surfaces.
   b. UL Classified options for use on fire-rated doors up to 3 hours.
   c. Fabricated from stainless steel, brass, bronze, aluminum, or high-impact plastic.
   d. Available in a variety of sizes, finishes, and profiles to suit aesthetic and functional requirements.

e. Designed to protect doors, frames, and adjacent walls from damage due to impact, abrasion, or traffic.
f. Fasteners included; adhesive-backed options available for select models.
g. Ten-year limited warranty.
2. Manufacturers:
a. Rockwood (RO).

2.13 DOOR STOPS AND HOLDERS

A. Door Stops and Bumpers: ANSI/BHMA A156.16, Grade 1 door stops and wall bumpers. Provide wall bumpers, either convex or concave types with anchorage as indicated, unless floor or other types of door stops are specified in Hardware Sets. Do not mount floor stops where they will impede traffic. Where floor or wall bumpers are not appropriate, provide overhead type stops and holders.
1. Manufacturers:
a. Rockwood (RO).
B. Overhead Door Stops and Holders: ANSI/BHMA A156.8, Grade 1 Certified Products Directory (CPD) listed overhead stops and holders to be surface or concealed types as indicated in Hardware Sets. Track, slide, arm and jamb bracket to be constructed of extruded bronze and shock absorber spring of heavy tempered steel. Provide non-handed design with mounting brackets as required for proper operation and function.
1. Manufacturers:
a. Norton Rixson (NO).
b. Rockwood (RO).

2.14 ARCHITECTURAL SEALS

A. General: Thresholds, weatherstripping, and gasket seals to be of type and design as specified below or in the Hardware Sets. Provide continuous weatherstrip gasketing on exterior doors and provide smoke, light, or sound gasketing on interior doors where indicated. At exterior applications provide non-corrosive fasteners and elsewhere where indicated.
B. Smoke Labeled Gasketing: Assemblies complying with NFPA 105 that are listed and labeled by a testing and inspecting agency acceptable to authorities having jurisdiction, for smoke control ratings indicated, based on testing according to UL 1784.
1. Provide smoke labeled perimeter gasketing at all smoke labeled openings.
C. Fire Labeled Gasketing: Assemblies complying with NFPA 80 that are listed and labeled by a testing and inspecting agency acceptable to authorities having jurisdiction, for fire ratings indicated, based on testing according to UL-10C.
1. Provide intumescent seals as indicated to meet UL10C Standard for Positive Pressure Fire Tests of Door Assemblies, and NFPA 252, Standard Methods of Fire Tests of Door Assemblies.
D. Sound-Rated Gasketing: Assemblies that are listed and labeled by a testing and inspecting agency, for sound ratings indicated.
E. Replaceable Seal Strips: Provide only those units where resilient or flexible seal strips are easily replaceable and readily available from stocks maintained by manufacturer.
F. Manufacturers:
1. Pemko (PE).

2.15 ELECTRONIC ACCESSORIES

A. Door Position Switches: Door position magnetic reed contact switches specifically designed for use in commercial door applications. On recessed models the contact and magnetic housing snap-lock into a 1" diameter hole. Surface mounted models include wide gap distance design complete with armored flex cabling. Provide SPDT, N/O switches with optional Rare Earth Magnet installation on steel doors with flush top channels.
1. Manufacturers:
a. Alarm Controls (AK) - CP1-1026 Series.
b. Securitron (SU) - DPS Series.
B. Intelligent Switching Power Supplies: Provide the least number of power supplies at the appropriate amperage level sufficient to exceed the required total draw for the specified electrified hardware and access control equipment.

1. Power supplies shall meet all functions and features as specified herein.
    a. UL listed dual voltage 12 or 24 VDC field selectable continuous output.
    b. Dedicated fast charger to prolong battery life with low battery cutoff to protect batteries from deep discharge.
    c. Enhanced surge immunity for input/output protection
    d. Separate, dedicated battery charging circuit to keep locks cooler.
    e. Dual-color LED visual notification to prevent applying incorrect voltages to the power supply.
    f. Instant auto-switch to battery on AC loss.
    g. Expandable up to 16 outputs in the standard enclosure
    h. Integrated fire alarm interface to allow main output shutdown or disconnect on a per output basis when using an R8 output module.
    i. Network ready and remotely manage locks and connected devices when using an M8 managed output module on network models.
    j. Lifetime replacement, no-fault, no questions asked warranty.
2. Manufacturers:
    a. Securitron (SU) - AQL Series.

2.16 FABRICATION

A. Fasteners: Provide door hardware manufactured to comply with published templates generally prepared for machine, wood, and sheet metal screws. Provide screws according to manufacturers recognized installation standards for application intended.

2.17 FINISHES

A. Standard: Designations used in the Hardware Sets and elsewhere indicate hardware finishes complying with ANSI/BHMA A156.18, including coordination with traditional U.S. finishes indicated by certain manufacturers for their products.
B. Provide quality of finish, including thickness of plating or coating (if any), composition, hardness, and other qualities complying with manufacturer's standards, but in no case less than specified by referenced standards for the applicable units of hardware
C. Protect mechanical finishes on exposed surfaces from damage by applying a strippable, temporary protective covering before shipping.

PART 3 EXECUTION

3.1 EXAMINATION

A. Examine scheduled openings, with Installer present, for compliance with requirements for installation tolerances, labeled fire door assembly construction, wall and floor construction, and other conditions affecting performance.
B. Notify architect of any discrepancies or conflicts between the door schedule, door types, drawings and scheduled hardware. Proceed only after such discrepancies or conflicts have been resolved in writing.

3.2 PREPARATION

A. Hollow Metal Doors and Frames: Comply with ANSI/DHI A115 series.
B. Wood Doors: Comply with ANSI/DHI A115-W series.

3.3 INSTALLATION

A. Install each item of mechanical and electromechanical hardware and access control equipment to comply with manufacturer's written instructions and according to specifications.
    1. Installers are to be trained and certified by the manufacturer on the proper installation and adjustment of fire, life safety, and security products including: hanging devices; locking devices; closing devices; and seals.

B. Mounting Heights: Mount door hardware units at heights indicated in following applicable publications, unless specifically indicated or required to comply with governing regulations:
   1. Standard Steel Doors and Frames: DHI's "Recommended Locations for Architectural Hardware for Standard Steel Doors and Frames."
   2. DHI TDH-007-20: Installation Guide for Doors and Hardware.
   3. Where indicated to comply with accessibility requirements, comply with ANSI A117.1 "Accessibility Guidelines for Buildings and Facilities."
   4. Provide blocking in drywall partitions where wall stops or other wall mounted hardware is located.
C. Retrofitting: Install door hardware to comply with manufacturer's published templates and written instructions. Where cutting and fitting are required to install door hardware onto or into surfaces that are later to be painted or finished in another way, coordinate removal, storage, and reinstallation of surface protective trim units with finishing work specified in Division 9 Sections. Do not install surface-mounted items until finishes have been completed on substrates involved.
D. Push Plates and Door Pulls: When through-bolt fasteners are in the same location as a push plate, countersink the fasteners flush with the door face allowing the push plate to sit flat against the door.
E. Thresholds: Set thresholds for exterior and acoustical doors in full bed of sealant complying with requirements specified in Division 7 Section "Joint Sealants."
F. Storage: Provide a secure lock up for hardware delivered to the project but not yet installed. Control the handling and installation of hardware items so that the completion of the work will not be delayed by hardware losses before and after installation.

3.4 FIELD QUALITY CONTROL

A. Field Inspection (Punch Report): Reference Division 01 Sections “Closeout Procedures”. Produce project punch report for each installed door opening indicating compliance with approved submittals and verification hardware is properly installed, operating and adjusted. Include list of items to be completed and corrected, indicating the reasons or deficiencies causing the Work to be incomplete or rejected.
   1. Organization of List: Include separate Door Opening and Deficiencies and Corrective Action Lists organized by Mark, Opening Remarks and Comments, and related Opening Images and Video Recordings.

3.5 ADJUSTING

A. Initial Adjustment: Adjust and check each operating item of door hardware and each door to ensure proper operation or function of every unit. Replace units that cannot be adjusted to operate as intended. Adjust door control devices to compensate for final operation of heating and ventilating equipment and to comply with referenced accessibility requirements.

3.6 CLEANING AND PROTECTION

A. Protect all hardware stored on construction site in a covered and dry place. Protect exposed hardware installed on doors during the construction phase. Install any and all hardware at the latest possible time frame.
B. Clean adjacent surfaces soiled by door hardware installation.
C. Clean operating items as necessary to restore proper finish. Provide final protection and maintain conditions that ensure door hardware is without damage or deterioration at time of owner occupancy.

3.7 DEMONSTRATION

A. Instruct Owner's maintenance personnel to adjust, operate, and maintain mechanical and electromechanical door hardware.

3.8 DOOR HARDWARE SETS

A. The hardware sets represent the design intent and direction of the owner and architect. They are a guideline only and should not be considered a detailed hardware schedule. Discrepancies, conflicting hardware and missing items should be brought to the attention of the architect with corrections made prior to the bidding process. Omitted items not included in a hardware set should be scheduled with the appropriate additional hardware required for proper application and functionality.
   1. Quantities listed are for each pair of doors, or for each single door.

2. The supplier is responsible for handing and sizing all products.
3. Where multiple options for a piece of hardware are given in a single line item, the supplier shall provide the appropriate application for the opening.
4. At existing openings with new hardware the supplier shall field inspect existing conditions prior to the submittal stage to verify the specified hardware will work as required. Provide alternate solutions and proposals as needed.

B. Manufacturer's Abbreviations:

1. MK - McKinney
2. RO - Rockwood
3. YA - ASSA ABLOY ACCENTRA
4. NO - Norton Rixson
5. PE - Pemko
6. SU - Securitron
7. OT - Other

HARDWARE SETS

SET: 1.0

DOORS: 110B

5	HINGE (HEAVY WEIGHT)	T4A3386 (NRP)	US32D	MK
1	HINGE (HEAVY WEIGHT)	T4A3386 QCW	US32D	MK
1	MULLION	KRM200 7'2"	600	YA
1	RIM EXIT DEVICE, EXIT ONLY	5CH 7100 EO	630	YA
1	ELECTRIFIED RIM EXIT, FAIL SECURE	5CH 7100 B AU691F TEMP CORE-6 PIN	630	YA
1	MORTISE CYLINDER	2196H TEMP CORE	626	YA
2	PERMANENT CORE	MATCH FACILITY STANDARD	626	YA
2	SURFACE CLOSER - CLOSER STOP	CPS7500	689	NO
2	KICK PLATE	K1050 10" HIGH CSK BEV	US32D	RO
1	MEETING ASTRAGAL SET	18041CSB		PE
1	GASKETING	303AS		PE
1	RAIN GUARD	346C (OMIT @ OVERHANG)		PE

1	MULLION GASKETING	5110BL		PE
2	SWEEP	315CN		PE
1	THRESHOLD	PER SILL DETAIL		PE
1	ELECTROLYNX FRAME HARNESS	QC-C1500P		MK
1	ELECTROLYNX DOOR HARNESS	QC-C__P		MK
1	POSITION SWITCH	DPS		SU
1	POWER SUPPLY W/ POWER DISTRIBUTION BOARD	AQL SERIES-R8E1 AS REQ'D		SU
1	CARD READER	DIVISION 28		OT

NOTES: DOOR TYPICALLY CLOSED AND LOCKED. PRESENTING VALID CREDENTIAL WILL MOMENTARILY RELEASE LEVER ALLOWING ENTRY. IN CASE OF FIRE ALARM OR POWER LOSS DOOR WILL REMAIN LOCKED. (FAIL SECURE). FREE EGRESS AT ALL TIMES.

SET: 2.0

DOORS: 100, 201

2	HINGE (HEAVY WEIGHT)	T4A3386 (NRP)	US32D	MK
1	HINGE (HEAVY WEIGHT)	T4A3386 QCW	US32D	MK
1	ELECTRIFIED RIM EXIT, FAIL SECURE	5CH 7100 B AU691F TEMP CORE-6 PIN	630	YA
1	RIM CYLINDER	1193 TEMP CORE	626	YA
1	SURFACE CLOSER - TRI-PACK	7500	689	NO
1	KICK PLATE	K1050 10" HIGH CSK BEV	US32D	RO
1	DOOR STOP	466-RKW	BLACK	RO
1	GASKETING	303AS		PE
1	RAIN GUARD	346C (OMIT @ OVERHANG)		PE
1	SWEEP	315CN		PE
1	THRESHOLD	PER SILL DETAIL		PE

1	ELECTROLYNX FRAME HARNESS	QC-C1500P		MK
1	ELECTROLYNX DOOR HARNESS	QC-C__P		MK
1	POSITION SWITCH	DPS		SU
1	POWER SUPPLY W/ POWER DISTRIBUTION BOARD	AQL SERIES-R8E1 AS REQ'D		SU
1	CARD READER	DIVISION 28		OT

NOTES: DOOR TYPICALLY CLOSED AND LOCKED. PRESENTING VALID CREDENTIAL WILL MOMENTARILY RELEASE LEVER ALLOWING ENTRY. IN CASE OF FIRE ALARM OR POWER LOSS DOOR WILL REMAIN LOCKED. (FAIL SECURE). FREE EGRESS AT ALL TIMES.

SET: 3.0

DOORS: 105A, 105B

3	HINGE (HEAVY WEIGHT)	T4A3386 (NRP)	US32D	MK
1	RIM EXIT DEVICE, EXIT ONLY	5CH 7100 EO	630	YA
1	SURFACE CLOSER - CLOSER STOP	CPS7500	689	NO
1	KICK PLATE	K1050 10" HIGH CSK BEV	US32D	RO
1	GASKETING	303AS		PE
1	RAIN GUARD	346C (OMIT @ OVERHANG)		PE
1	SWEEP	315CN		PE
1	THRESHOLD	PER SILL DETAIL		PE

SET: 4.0

DOORS: 1300N

2	HINGE, FULL MORTISE	TA2314 (NRP-STD)	US32D	MK
1	HINGE, FULL MORTISE	TA2314 QCW	US32D	MK

1	FAIL SECURE LOCK	AUR 8891FL TEMP CORE-6 PIN	630	YA
1	PERMANENT CORE	MATCH FACILITY STANDARD	626	YA
1	SURFACE CLOSER - CLOSER STOP	CPS7500	689	NO
1	KICK PLATE	K1050 10" HIGH CSK BEV	US32D	RO
1	GASKETING	303AS		PE
1	RAIN GUARD	346C (OMIT @ OVERHANG)		PE
1	SWEEP	315CN		PE
1	THRESHOLD	PER SILL DETAIL		PE
1	ELECTROLYNX FRAME HARNESS	QC-C1500P		MK
1	ELECTROLYNX DOOR HARNESS	QC-C__P		MK
1	POSITION SWITCH	DPS		SU
1	POWER SUPPLY W/ POWER DISTRIBUTION BOARD	AQL SERIES-R8E1 AS REQ'D		SU
1	CARD READER	DIVISION 28		OT

NOTES: DOOR TYPICALLY CLOSED AND LOCKED. PRESENTING VALID CREDENTIAL WILL MOMENTARILY RELEASE LEVER ALLOWING ENTRY. IN CASE OF FIRE ALARM OR POWER LOSS DOOR WILL REMAIN LOCKED. (FAIL SECURE). FREE EGRESS AT ALL TIMES.

SET: 5.0
DOORS: 112

3	HINGE, FULL MORTISE	TA2314 (NRP-STD)	US32D	MK
1	STOREROOM OR CLOSET LOCK	AUR 8805FL TEMP CORE-6 PIN	630	YA
1	PERMANENT CORE	MATCH FACILITY STANDARD	626	YA

1	SURFACE CLOSER - CLOSER STOP	CPS7500	689	NO
1	GASKETING	303AS		PE
1	RAIN GUARD	346C (OMIT @ OVERHANG)		PE
1	SWEEP	315CN		PE
1	THRESHOLD	PER SILL DETAIL		PE
SET: 6.0				
DOORS: 110A				
2	HINGE (HEAVY WEIGHT)	T4A3786 (NRP)	US26D	MK
1	HINGE (HEAVY WEIGHT)	T4A3786 QCW	US26D	MK
1	ELECTRIFIED RIM EXIT, FAIL SECURE	5CH 7100 B AU691F TEMP CORE-6 PIN	630	YA
1	PERMANENT CORE	MATCH FACILITY STANDARD	626	YA
1	SURFACE CLOSER - TRI-PACK	7500	689	NO
1	KICK PLATE	K1050 10" HIGH CSK BEV	US32D	RO
1	WALL STOP	403	US26D	RO
3	SILENCER	608-RKW		RO
1	ELECTROLYNX FRAME HARNESS	QC-C1500P		MK
1	ELECTROLYNX DOOR HARNESS	QC-C__P		MK
1	POWER SUPPLY W/ POWER DISTRIBUTION BOARD	AQL SERIES-R8E1 AS REQ'D		SU
1	CARD READER	DIVISION 28		OT
NOTES: DOOR TYPICALLY CLOSED AND LOCKED. PRESENTING VALID CREDENTIAL WILL MOMENTARILY RELEASE LEVER ALLOWING ENTRY. IN CASE OF FIRE ALARM OR POWER LOSS DOOR WILL REMAIN LOCKED. (FAIL SECURE). FREE EGRESS AT ALL TIMES.				

SET: 7.0				
DOORS: 101				
2	HINGE (HEAVY WEIGHT)	T4A3786 (NRP)	US26D	MK
1	HINGE (HEAVY WEIGHT)	T4A3786 QCW	US26D	MK
1	ELECTRIFIED RIM EXIT, FAIL SECURE	5CH 7100 B AU691F TEMP CORE-6 PIN	630	YA
1	PERMANENT CORE	MATCH FACILITY STANDARD	626	YA
1	SURFACE CLOSER - TRI-PACK	7500	689	NO
1	KICK PLATE	K1050 10" HIGH CSK BEV	US32D	RO
1	WALL STOP	403	US26D	RO
1	ELECTROLYNX FRAME HARNESS	QC-C1500P		MK
1	ELECTROLYNX DOOR HARNESS	QC-C__P		MK
1	POWER SUPPLY W/ POWER DISTRIBUTION BOARD	AQL SERIES-R8E1 AS REQ'D		SU
1	CARD READER	DIVISION 28		OT
NOTES: DOOR TYPICALLY CLOSED AND LOCKED. PRESENTING VALID CREDENTIAL WILL MOMENTARILY RELEASE LEVER ALLOWING ENTRY. IN CASE OF FIRE ALARM OR POWER LOSS DOOR WILL REMAIN LOCKED. (FAIL SECURE). FREE EGRESS AT ALL TIMES. CAM LIFT HINGES (AS REQUIRED), SOUND SEAL, DOOR BOTTOM, AND THRESHOLD, PROVIDED AS PART OF SOUND DOOR ASSEMBLY.				
SET: 8.0				
DOORS: 105D				
2	HINGE (HEAVY WEIGHT)	T4A3786 (NRP)	US26D	MK
1	HINGE (HEAVY WEIGHT)	T4A3786 QCW	US26D	MK

1	ELECTRIFIED RIM EXIT, FAIL SECURE	5CH 7100 B AU691F TEMP CORE-6 PIN	630	YA
1	PERMANENT CORE	MATCH FACILITY STANDARD	626	YA
1	SURFACE CLOSER - CLOSER STOP	CPS7500	689	NO
1	KICK PLATE	K1050 10" HIGH CSK BEV	US32D	RO
3	SILENCER	608-RKW		RO
1	ELECTROLYNX FRAME HARNESS	QC-C1500P		MK
1	ELECTROLYNX DOOR HARNESS	QC-C__P		MK
1	POWER SUPPLY W/ POWER DISTRIBUTION BOARD	AQL SERIES-R8E1 AS REQ'D		SU
1	CARD READER	DIVISION 28		OT

NOTES: DOOR TYPICALLY CLOSED AND LOCKED. PRESENTING VALID CREDENTIAL WILL MOMENTARILY RELEASE LEVER ALLOWING ENTRY. IN CASE OF FIRE ALARM OR POWER LOSS DOOR WILL REMAIN LOCKED. (FAIL SECURE). FREE EGRESS AT ALL TIMES.

CAM LIFT HINGES (AS REQUIRED), SOUND SEAL, DOOR BOTTOM, AND THRESHOLD, PROVIDED AS PART OF SOUND DOOR ASSEMBLY.

SET: 9.0

DOORS: 100A

2	HINGE, FULL MORTISE	TA2714-MCK (NRP-STD)	US26D	MK
1	HINGE, FULL MORTISE	TA2714-MCK QCW	US26D	MK
1	FAIL SECURE LOCK	AU 4791LN TEMP CORE-6 PIN	626	YA
1	PERMANENT CORE	MATCH FACILITY STANDARD	626	YA
1	SURFACE CLOSER - TRI-PACK	7500	689	NO

1	KICK PLATE	K1050 10" HIGH CSK BEV	US32D	RO
1	WALL STOP	403	US26D	RO
1	ELECTROLYNX FRAME HARNESS	QC-C1500P		MK
1	ELECTROLYNX DOOR HARNESS	QC-C__P		MK
1	POWER SUPPLY W/ POWER DISTRIBUTION BOARD	AQL SERIES-R8E1 AS REQ'D		SU
1	CARD READER	DIVISION 28		OT

NOTES: DOOR TYPICALLY CLOSED AND LOCKED. PRESENTING VALID CREDENTIAL WILL MOMENTARILY RELEASE LEVER ALLOWING ENTRY. IN CASE OF FIRE ALARM OR POWER LOSS DOOR WILL REMAIN LOCKED. (FAIL SECURE). FREE EGRESS AT ALL TIMES.

CAM LIFT HINGES (AS REQUIRED), SOUND SEAL, DOOR BOTTOM, AND THRESHOLD, PROVIDED AS PART OF SOUND DOOR ASSEMBLY.

SET: 10.0

DOORS: 104

2	HINGE, FULL MORTISE	TA2714-MCK (NRP-STD)	US26D	MK
1	HINGE, FULL MORTISE	TA2714-MCK QCW	US26D	MK
1	FAIL SECURE LOCK	AU 4791LN TEMP CORE-6 PIN	626	YA
1	PERMANENT CORE	MATCH FACILITY STANDARD	626	YA
1	SURFACE CLOSER - CLOSER STOP	CPS7500	689	NO
1	KICK PLATE	K1050 10" HIGH CSK BEV	US32D	RO
1	GASKETING	S88BL		PE
1	ELECTROLYNX FRAME HARNESS	QC-C1500P		MK
1	ELECTROLYNX DOOR HARNESS	QC-C__P		MK

1	POWER SUPPLY W/ POWER DISTRIBUTION BOARD	AQL SERIES-R8E1 AS REQ'D		SU
1	CARD READER	DIVISION 28		OT

NOTES: DOOR TYPICALLY CLOSED AND LOCKED. PRESENTING VALID CREDENTIAL WILL MOMENTARILY RELEASE LEVER ALLOWING ENTRY. IN CASE OF FIRE ALARM OR POWER LOSS DOOR WILL REMAIN LOCKED. (FAIL SECURE). FREE EGRESS AT ALL TIMES.

SET: 11.0

DOORS: 105C

2	HINGE, FULL MORTISE	TA2714-MCK (NRP-STD)	US26D	MK
1	HINGE, FULL MORTISE	TA2714-MCK QCW	US26D	MK
1	FAIL SECURE LOCK	AU 4791LN TEMP CORE-6 PIN	626	YA
1	PERMANENT CORE	MATCH FACILITY STANDARD	626	YA
1	CONCEALED OVERHEAD HOLDER/STOP	1-X36	630	NO
1	SURFACE CLOSER - TRI-PACK	7500	689	NO
1	KICK PLATE	K1050 10" HIGH CSK BEV	US32D	RO
1	ELECTROLYNX FRAME HARNESS	QC-C1500P		MK
1	ELECTROLYNX DOOR HARNESS	QC-C__P		MK
1	POWER SUPPLY W/ POWER DISTRIBUTION BOARD	AQL SERIES-R8E1 AS REQ'D		SU
1	CARD READER	DIVISION 28		OT

NOTES: DOOR TYPICALLY CLOSED AND LOCKED. PRESENTING VALID CREDENTIAL WILL MOMENTARILY RELEASE LEVER ALLOWING ENTRY. IN CASE OF FIRE ALARM OR POWER LOSS DOOR WILL REMAIN

LOCKED. (FAIL SECURE). FREE EGRESS AT ALL TIMES.

CAM LIFT HINGES (AS REQUIRED), SOUND SEAL, DOOR BOTTOM, AND THRESHOLD, PROVIDED AS PART OF SOUND DOOR ASSEMBLY.

SET: 12.0
DOORS: 108

6	HINGE, FULL MORTISE	TA2714-MCK (NRP-STD)	US26D	MK
1	SELF LATCHING FLUSH BOLT (TOP BOLT ONLY)	2805/2905	US32D	RO
1	STOREROOM OR CLOSET LOCK	AU 4705LN TEMP CORE-6 PIN	626	YA
1	PERMANENT CORE	MATCH FACILITY STANDARD	626	YA
1	COORDINATOR	2600 SERIES X BRKTS AS REQ'D	BLACK	RO
2	SURFACE CLOSER - CLOSER STOP	CPS7500	689	NO
1	KICK PLATE	K1050 10" HIGH CSK BEV	US32D	RO
1	OVERLAPPING ASTRAGAL	357SP		PE
2	SILENCER	608-RKW		RO

SET: 13.0
DOORS: 103

3	HINGE, FULL MORTISE	TA2714-MCK (NRP-STD)	US26D	MK
1	STOREROOM OR CLOSET LOCK	AU 4705LN TEMP CORE-6 PIN	626	YA
1	PERMANENT CORE	MATCH FACILITY STANDARD	626	YA
1	SURFACE CLOSER -	7500	689	NO

	TRI-PACK			
1	KICK PLATE	K1050 10" HIGH CSK BEV	US32D	RO
1	WALL STOP	403	US26D	RO
3	SILENCER	608-RKW		RO
SET: 13.1				
DOORS: 107				
3	HINGE, FULL MORTISE	TA2714-MCK (NRP-STD)	US26D	MK
1	STOREROOM OR CLOSET LOCK	AU 4705LN TEMP CORE-6 PIN	626	YA
1	PERMANENT CORE	MATCH FACILITY STANDARD	626	YA
1	SURFACE CLOSER - TRI-PACK	7500	689	NO
1	KICK PLATE	K1050 10" HIGH CSK BEV	US32D	RO
1	WALL STOP	403	US26D	RO
1	GASKETING	S88BL		PE
SET: 14.0				
DOORS: 106				
3	HINGE, FULL MORTISE	TA2714-MCK (NRP-STD)	US26D	MK
1	STOREROOM OR CLOSET LOCK	AU 4705LN TEMP CORE-6 PIN	626	YA
1	PERMANENT CORE	MATCH FACILITY STANDARD	626	YA
1	SURFACE CLOSER - TRI-PACK	7500	689	NO
1	KICK PLATE	K1050 10" HIGH CSK BEV	US32D	RO
1	WALL STOP	403	US26D	RO
1	GASKETING	S88BL		PE
SET: 15.0				
DOORS: 109				

3	HINGE, FULL MORTISE	TA2714-MCK (NRP-STD)	US26D	MK
1	STOREROOM OR CLOSET LOCK	AU 4705LN TEMP CORE-6 PIN	626	YA
1	PERMANENT CORE	MATCH FACILITY STANDARD	626	YA
1	SURFACE CLOSER - CLOSER STOP	CPS7500	689	NO
1	KICK PLATE	K1050 10" HIGH CSK BEV	US32D	RO
1	GASKETING	S88BL		PE
SET: 16.0				
DOORS: 102				
3	HINGE, FULL MORTISE	TA2714-MCK (NRP-STD)	US26D	MK
1	BATHROOM LOCK	AUR 8862FL V21	626	YA
1	SURFACE CLOSER - TRI-PACK	7500	689	NO
1	MOP PLATE	K1050 6" HIGH CSK BEV	US32D	RO
1	KICK PLATE	K1050 10" HIGH CSK BEV	US32D	RO
1	WALL STOP	403	US26D	RO
1	GASKETING	S88BL		PE
SET: 17.0				
DOORS: 105F				
1		HARDWARE BY DOOR MANUFACTURER		OT
SET: 18.0				
1		HARDWARE BY GATE MANUFACTURER		OT

END OF SECTION

SECTION 089100 - LOUVERS

PART 1 GENERAL

1.1 SECTION INCLUDES

A. Louvers, frames, and accessories.

1.2 RELATED REQUIREMENTS

A. Section 076200 - Sheet Metal Flashing and Trim.

1.3 REFERENCE STANDARDS

A. AAMA 2605 - Voluntary Specification, Performance Requirements and Test Procedures for Superior Performing Organic Coatings on Aluminum Extrusions and Panels (with Coil Coating Appendix); 2022.
B. AMCA 500-L - Laboratory Methods of Testing Louvers for Rating; 2023.
C. AMCA 511 - Certified Ratings Program Product Rating Manual for Air Control Devices; 2021, with Editorial Revision (2022).
D. ASCE 7 - Minimum Design Loads and Associated Criteria for Buildings and Other Structures; Most Recent Edition Cited by Referring Code or Reference Standard.
E. ASTM A653/A653M - Standard Specification for Steel Sheet, Zinc-Coated (Galvanized) or Zinc-Iron Alloy-Coated (Galvannealed) by the Hot-Dip Process; 2025.
F. ASTM D2244 - Standard Practice for Calculation of Color Tolerances and Color Differences from Instrumentally Measured Color Coordinates; 2025.
G. ASTM E90 - Standard Test Method for Laboratory Measurement of Airborne Sound Transmission Loss of Building Partitions and Elements; 2023.
H. AWS D1.2/D1.2M - Structural Welding Code - Aluminum; 2014, with Errata (2020).
I. SMACNA (ASMM) - Architectural Sheet Metal Manual; 2012.

1.4 SUBMITTALS

A. See Section 013000 - Administrative Requirements for submittal procedures.
B. Product Data: Provide data describing design characteristics, maximum recommended air velocity, design free area, materials and finishes.
C. Shop Drawings: Indicate louver layout plan and elevations, opening and clearance dimensions, and tolerances; head, jamb and sill details; blade configuration, screens, blank-off areas required, and frames. Show weep paths, gaskets, flashing, sealant, and other means of preventing water intrusion.
D. Test Reports: Independent agency reports showing compliance with specified performance criteria.
E. Manufacturer's Certificate: Certify that products meet or exceed specified requirements.

1.5 QUALITY ASSURANCE

A. Manufacturer Qualifications: Company specializing in manufacturing products of the type specified in this section, with minimum 5 years of documented experience.
B. Installer Qualifications: Company specializing in performing work of type specified and with at least 3 years of documented experience.
C. Welding Qualifications: Qualify procedures and personnel according to the following:
   1. AWS D1.2/D1.2M, Structural Welding Code - Aluminum.

1.6 COORDINATION

A. Coordinate fixed louver installation with adjoining work to provide a leakproof, secure, and noncorrosive installation.
B. Coordinate installation of miscellaneous metal sub-framing, anchorage items, or other items to be embedded in or attached to other construction before starting that Work. Provide locations, setting diagrams, templates, instructions, and directions for installation. Deliver such items to Project site in time for installation.

1.7 FIELD CONDITIONS

A. Pre-Installation Field Measurements: Coordinate exact hardware and anchorage locations with other Trade Contractors before permanently attaching to other construction.

B. Post-Installed Field Measurements: Field verify and examine actual installed locations of connection hardware and anchorage items prior to installation of Work provided under this Section. Notify General Contractor and Architect immediately of any discrepancies in writing. Provide letter from fixed louver installer indicating acceptance of connection hardware and anchorage items.

1.8 WARRANTY

A. See Section 017800 - Closeout Submittals for additional warranty requirements.

B. Provide 5 year manufacturer's warranty against distortion, metal degradation, and connection failures of louver components.

1. Deterioration includes, but is not limited to, the following:

a. Color fading more than 5 Hunter units when tested according to ASTM D2244.

b. Chalking in excess of a No. 8 rating when tested according to ASTM D2244.

c. Cracking, checking, peeling, or failure of paint to adhere to bare metal.

2. Warranty Period: 20 years from date of Substantial Completion.

PART 2 PRODUCTS

2.1 MANUFACTURERS

A. Louvers:

1. IAC Acoustics , Inc; _____: www.industriallouvers.com/#sle.

2. Substitutions: See Section 016000 - Product Requirements.

B. Source Limitations: Obtain louvers from single source from a single manufacturer where indicated to be of same type, design, or factory-applied color finish.

2.2 PERFORMANCE REQUIREMENTS

A. General: Fixed louvers assemblies and associated flashings shall withstand wind loads, structural movement, thermally induced movement, and exposure to weather without failure due to defective manufacture, fabrication, installation, or other defects in construction. Completed fixed louver assemblies and associated flashings shall not rattle, leak or loosen, and shall remain watertight and prevent intrusion into the building interior.

B. Structural Performance: Louvers shall withstand the effects of gravity loads and the following loads and stresses within limits and under conditions indicated without permanent deformation of louver components, noise or metal fatigue caused by louver-blade rattle or flutter, or permanent damage to fasteners and anchors. Wind pressures shall be considered to act normal to the face of the building.

1. Wind Loads: Per the California Building Code based upon criteria indicated on the Structural Drawings.

C. Seismic Performance: Louvers, including attachments to other construction, shall withstand the effects of earthquake motions determined according to the California Building Code and ASCE 7.

1. Component Importance Factor: 1.5.

D. Louver Performance Ratings: Provide louvers complying with requirements specified, as demonstrated by testing manufacturer's stock units identical to those provided, except for length and width according to AMCA 500-L.

1. Air Flow: As indicated on drawings.

E. Thermal Movements: Allow for thermal movements from ambient and surface temperature changes.

1. Temperature Change (Range): 120 degrees F, ambient; 180 degrees F, material surfaces.

F. SMACNA (ASMM) Standard: Comply with recommendations in Architectural Sheet Metal Manual for fabrication, construction details, and installation procedures.

G. Intake Louvers: Design to allow maximum of 0.01 oz/sq ft water penetration at calculated intake design velocity based on design air flow and actual free area, when tested in accordance with AMCA 500-L.

H. Weather stops inhibits rain entry.

2.3 LOUVERS

A. Louvers: Factory fabricated and assembled, complete with frame, mullions, and accessories; AMCA Certified in accordance with AMCA 511.

B. Acoustical Louvers: Horizontal blade, formed galvanized steel sheet construction.

1. Sound Attenuation: Minimum sound transmission loss of 8 dB at 63 Hz, when tested in accordance with ASTM E90.
2. Free Area: As indicated on drawings.
3. Blades: Straight, sloped at 45 degrees, with insulating material in cavity, double banked. Splitter blades packed with inert, vermina and moisture proof mineral fiber.
4. Steel Thickness, Galvanized: Frame 16 gauge, 0.0598 inch minimum base metal; blades 22 gauge, 0.299 inch minimum base metal.
5. Steel Finish: Superior performing organic coatings, finished after fabrication.

2.4 MATERIALS

A. Extruded Aluminum: ASTM B221 (ASTM B221M).

B. Steel Sheet: Hot-dipped galvanized steel sheet, ASTM A653/A653M, with G90/Z275 coating.

2.5 FABRICATION

A. Factory assemble louvers to minimize field splicing and assembly. Disassemble units as necessary for shipping and handling limitations. Clearly mark units for reassembly and coordinated installation.

B. Maintain equal louver blade spacing, including separation between blades and frames at head and sill, to produce uniform appearance.

C. Fabricate frames, including integral sills, to fit in openings of sizes indicated, with allowances made for fabrication and installation tolerances, adjoining material tolerances, and perimeter sealant joints.

D. Include supports, anchorages, and accessories required for complete assembly.

E. Provide vertical mullions of type and at spacings indicated, but not more than is recommended by manufacturer, or 72 inches on center, whichever is less.

1. Fully Recessed Mullions: Where indicated, provide mullions fully recessed behind louver blades. Where length of louver exceeds fabrication and handling limitations, fabricate with close-fitting blade splices designed to permit expansion and contraction.
2. Semi-recessed Mullions: Where indicated, provide mullions partly recessed behind louver blades so louver blades appear continuous. Where length of louver exceeds fabrication and handling limitations, fabricate with interlocking split mullions and close-fitting blade splices designed to permit expansion and contraction.

F. Provide subsills made of same material as louvers for recessed louvers.

G. Join frame members to each other and to fixed louver blades with fillet welds concealed from view, threaded fasteners, or both, as standard with louver manufacturer unless otherwise indicated or size of louver assembly makes bolted connections between frame members necessary.

2.6 FINISHES

A. Finish louvers after assembly.

B. Superior Performing Organic Coatings System: Manufacturer's standard multi-coat superior performing organic coatings system complying with AAMA 2605, including at least 70 percent polyvinylidene fluoride (PVDF) resin, and at least 80 percent of aluminum extrusion and panels surfaces having minimum total dry film thickness (DFT) of 1.2 mils, 0.0012 inch.

1. Minimum two-coat
2. Prepare, pretreat, and apply coating to exposed metal surfaces to comply with coating and resin manufacturers' written instructions.
3. Color and Gloss: As indicated on Drawings, or if not indicated, custom color to match Architect's sample.

2.7 ACCESSORIES

A. Blank-Off Panels: Same material as louver, painted black on exterior side; provide where duct connected to louver is smaller than louver frame, sealing off louver area outside duct.

B. Insect Screen: Manufacturer's standard, stainless steel.

C. Flashings: Of same material as louver frame, formed to required shape, single length in one piece per location.

D. Sealant for Setting Sills and Sill Flashing: Non-curing butyl type.

PART 3 EXECUTION

3.1 EXAMINATION

A. Verify that prepared openings and flashings are ready to receive this work and opening dimensions are as indicated on shop drawings.

B. Proceed with installation only after unsatisfactory conditions have been corrected.

3.2 PREPARATION

A. Coordinate setting drawings, diagrams, templates, instructions, and directions for installation of anchorages that are to be embedded in concrete or masonry construction. Coordinate delivery of such items to Project site.

3.3 INSTALLATION

A. Install louver assembly in accordance with manufacturer's instructions.

B. Install louvers level and plumb.

C. Set sill members and sill flashing in continuous bead of sealant.

D. Install flashings and align louver assembly to ensure moisture shed from flashings and diversion of moisture to exterior.

E. Secure louver frames in openings with concealed fasteners.

F. Form closely fitted joints with exposed connections accurately located and secured.

G. Provide perimeter reveals and openings of uniform width for sealants and joint fillers, as indicated.

H. Protect unpainted galvanized and nonferrous-metal surfaces that are in contact with concrete, masonry, or dissimilar metals from corrosion and galvanic action by applying a heavy coating of bituminous paint or by separating surfaces with waterproof gaskets or nonmetallic flashing.

I. Install concealed gaskets, flashings, joint fillers, and insulation as louver installation progresses, where weathertight louver joints are required. Comply with Section 079200 - Joint Sealants for sealants applied during louver installation.

3.4 ERECTION TOLERANCES

A. Erection Tolerances: Install fixed louvers to comply with the following maximum tolerances:

1. Plumb: 1/8 inch in 10 feet; 1/4 inch in 40 feet.
2. Level: 1/8 inch in 20 feet; 1/4 inch in 40 feet.
3. Location: Limit variation from plane to 1/8 inch in 12 feet; 1/2 inch over total length.
4. Alignment:
   a. Where surfaces abut in line or are separated by reveal or protruding element up to 1/2 inch wide, limit offset from true alignment to 1/16 inch.
   b. Where surfaces are separated by reveal or protruding element from 1/2 inch to 1 inch wide, limit offset from true alignment to 1/8 inch.
   c. Where surfaces are separated by reveal or protruding element of 1 inch wide or more, limit offset from true alignment to 1/4 inch.

3.5 FIELD QUALITY CONTROL (BY OWNER)

A. Special Inspections: Owner will engage a qualified special inspector to perform the following special inspections:
   1. Field and shop welds in compliance with California Building Code 1705.2.
B. Repair or remove work if test results and inspections indicate that it does not comply with specified requirements.
C. Additional testing and inspecting, at Contractor's expense, will be performed to determine compliance of replaced or additional work with specified requirements.
D. Fixed louvers will be considered defective if they do not pass tests and inspections.
E. Prepare test and inspection reports.

3.6 ADJUSTING AND CLEANING

A. Clean exposed louver surfaces that are not protected by temporary covering, to remove fingerprints and soil during construction period. Do not let soil accumulate during construction period.
B. Before final inspection, clean exposed surfaces with water and a mild soap or detergent not harmful to finishes. Thoroughly rinse surfaces and dry.
C. Restore louvers damaged during installation and construction so no evidence remains of corrective work. If results of restoration are unsuccessful, as determined by Architect, remove damaged units and replace with new units.

END OF SECTION

SECTION 092116 - GYPSUM BOARD ASSEMBLIES

PART 1 GENERAL

1.1 SECTION INCLUDES

A. Performance criteria for gypsum board assemblies.
B. Metal stud wall framing.
C. Metal channel ceiling framing.
D. Acoustic and fire rated insulation.
E. Cementitious tile backing board.
F. Gypsum wallboard.
G. Joint treatment and accessories.
H. Acoustic (sound-dampening) wall and ceiling board.

1.2 RELATED REQUIREMENTS

A. Section 016116 - Volatile Organic Compound (VOC) Content Restrictions.
B. Section 079200 - Joint Sealants: Acoustical sealant.

1.3 REFERENCE STANDARDS

A. AISI S220 - North American Standard for Cold-Formed Steel Nonstructural Framing; 2020.
B. AISI S240 - North American Standard for Cold-Formed Steel Structural Framing; 2015, with Errata (2020).
C. ANSI A108.01 - General Requirements: Subsurfaces and Preparations by Other Trades; 2021a.
D. ANSI A108.11 - American National Standard Specifications for Interior Installation of Cementitious Backer Units; 2023.
E. ANSI A118.9 - American National Standard Specifications for Test Methods and Specifications for Cementitious Backer Units; 2023.
F. ASTM A653/A653M - Standard Specification for Steel Sheet, Zinc-Coated (Galvanized) or Zinc-Iron Alloy-Coated (Galvannealed) by the Hot-Dip Process; 2025.
G. ASTM A1003/A1003M - Standard Specification for Steel Sheet, Carbon, Metallic- and Nonmetallic-Coated for Cold-Formed Framing Members; 2015.
H. ASTM C1007 - Standard Specification for Installation of Load Bearing (Transverse and Axial) Steel Studs and Related Accessories; 2020 (Reapproved 2024).
I. ASTM C475/C475M - Standard Specification for Joint Compound and Joint Tape for Finishing Gypsum Board; 2017 (Reapproved 2022).
J. ASTM C665 - Standard Specification for Mineral-Fiber Blanket Thermal Insulation for Light Frame Construction and Manufactured Housing; 2024.
K. ASTM C754 - Standard Specification for Installation of Steel Framing Members to Receive Screw-Attached Gypsum Panel Products; 2020.
L. ASTM C840 - Standard Specification for Application and Finishing of Gypsum Board; 2025.
M. ASTM C919 - Standard Practice for Use of Sealants in Acoustical Applications; 2024.
N. ASTM C1002 - Standard Specification for Steel Self-Piercing Tapping Screws for Application of Gypsum Panel Products or Metal Plaster Bases to Wood Studs or Steel Studs; 2022.
O. ASTM C1047 - Standard Specification for Accessories for Gypsum Wallboard and Gypsum Veneer Base; 2019.
P. ASTM C1178/C1178M - Standard Specification for Coated Glass Mat Water-Resistant Gypsum Backing Panel; 2024.
Q. ASTM C1325 - Standard Specification for Fiber-Mat Reinforced Cementitious Backer Units; 2025.
R. ASTM C1396/C1396M - Standard Specification for Gypsum Board; 2024.
S. ASTM C1629/C1629M - Standard Classification for Abuse-Resistant Nondecorated Interior Gypsum Panel Products and Fiber-Reinforced Cement Panels; 2024.
T. ASTM C1658/C1658M - Standard Specification for Glass Mat Gypsum Panels; 2019 (Reapproved 2024).

U. ASTM D3273 - Standard Test Method for Resistance to Growth of Mold on the Surface of Interior Coatings in an Environmental Chamber; 2021.
V. ASTM E84 - Standard Test Method for Surface Burning Characteristics of Building Materials; 2026.
W. ASTM E90 - Standard Test Method for Laboratory Measurement of Airborne Sound Transmission Loss of Building Partitions and Elements; 2023.
X. ASTM E119 - Standard Test Methods for Fire Tests of Building Construction and Materials; 2024.
Y. ASTM E413 - Classification for Rating Sound Insulation; 2022.
Z. GA-216 - Application and Finishing of Gypsum Panel Products; 2024.
AA. GA-226 - Application of Gypsum Board to Form Curved Surfaces; 2025.
BB. UL (DIR) - Online Certifications Directory; Current Edition.
CC. SSPC-Paint 20 - Zinc-Rich Coating (Type I - Inorganic, and Type II - Organic); 2019.

1.4 ADMINISTRATIVE REQUIREMENTS

A. Coordination: Coordinate the installation of gypsum board assemblies with size, location, and installation of service utilities.
B. Preinstallation Meeting: Conduct a preinstallation meeting 1 week prior to the start of the work of this section; require attendance by all affected installers.

1.5 SUBMITTALS

A. See Section 013000 - Administrative Requirements for submittal procedures.
B. Product Data:
   1. Provide data on metal framing, gypsum board, glass mat faced gypsum board, accessories, and joint finishing system.
   2. Provide manufacturer's data on partition head to structure connectors, showing compliance with requirements.
C. Shop Drawings: Indicate special details associated with fireproofing and acoustic seals.
D. Product Test Reports: Tests performed by a qualifed testing agency. Unlisted manufacturers and products will not be accepted.
   1. Fire resistant rated assemblies.
   2. Acoustical rated assemblies.
E. Manufacturer's Qualification Statement.
F. Installer's Qualification Statement.

1.6 QUALITY ASSURANCE

A. Manufacturer Qualifications: Company with at least 10 years experience regularly engaged in the production and sales of gypsum board that has been used for similar applications with successful results, that meets or exceeds performance requirements indicated, and of documenting this performance by inclusion in test reports.
B. Installer Qualifications: Company specializing in performing work of the type specified and with at least 3 years of documented experience. Installer shall be a member of the Western Wall and Ceiling Contractor's Association.

1.7 MOCK-UP

A. Build mock-up of at least 100 square feet in surface area to demonstrate aesthetic effects and to set quality standards for materials and execution.
B. Provide mock-up for each level of gypsum board finish indicated for use in exposed locations.
C. Apply or install final decoration indicated, including painting and wallcoverings, on exposed surfaces for review of the mock-up.
D. Simulate finished lighting conditions for review of mock-up.
E. Subject to compliance with requirements, approved mockup may become part of the completed Work if undisturbed at time of Substantial Completion.

1.8 DELIVERY, STORAGE, AND HANDLING

A. Store gypsum products and accessories indoors and keep above freezing. Elevate boards above floor, on nonwicking supports, in accordance with manufacturer's recommendations.

1.9 FIELD CONDITIONS

A. Environmental Limitations: Comply with ASTM C840 requirements or gypsum board manufacturer's written instructions, whichever are more stringent.
B. Unless using gypsum products that are specifically manufactured for limited exposure, do not install interior products until installations areas are protected from moisture.
C. Do not install panels that are wet, moisture damaged, and mold damaged.
   1. Indications that panels are wet or moisture damaged include, but are not limited to, discoloration, sagging, or irregular shape.
   2. Indications that panels are mold damaged include, but are not limited to, fuzzy or splotchy surface contamination and discoloration.

PART 2 PRODUCTS

2.1 PERFORMANCE REQUIREMENTS

A. Fire-Resistance-Rated Assemblies: For fire resistance rated assemblies, provide materials and construction identical to those tested in assembly indicated according to ASTM E119 by an independent testing agency.
   1. For proprietary listings, do not mix-and-match gypsum panels from different manufacturers in assemblies that have not been tested together.
B. STC-Rated Assemblies: For STC-rated assemblies, provide materials and construction identical to those tested in assembly indicated according to ASTM E90 and classified according to ASTM E413 by an independent testing agency.

2.2 GYPSUM BOARD ASSEMBLIES

A. Provide completed assemblies complying with ASTM C840 and GA-216.
   1. See PART 3 for finishing requirements.
B. Interior Partitions, Indicated as Acoustic: Provide completed assemblies with the following characteristics:
   1. Acoustic Attenuation: STC as indicated calculated in accordance with ASTM E413, based on tests conducted in accordance with ASTM E90.
C. Seismic Performance: Suspended ceilings shall withstand the effects of earthquake motions determined according to the California Building Code based on criteria indicated on the structural drawings.
D. Size: Provide maximum lengths and widths available that will minimize joints in each area and that correspond with support system indicated

2.3 METAL FRAMING MATERIALS

A. Steel Sheet: ASTM A1003/A1003M, subject to the ductility limitations indicated in AISI S220 or equivalent.
B. Nonstructural Framing System Components: AISI S220; galvanized sheet steel, of size and properties necessary to comply with ASTM C754 for the spacing indicated, with maximum deflection of wall framing of L/240 at 5 psf.
   1. Studs: C-shaped with knurled or embossed faces.
   2. Runners: U shaped, sized to match studs.
   3. Furring Members: Hat-shaped sections, minimum depth of 7/8 inch.
C. Non-structural Framing Accessories:
   1. Bracing and Bridging: ASTM A653/A653M G90 galvanized steel; for lateral bracing of wall studs with slots for engaging on-module studs.
      a. Basis of Design Products:
         1) Simpson Strong-Tie; DBR Drywall Spacer Bracer: www.strongtie.com/#sle.
   2. Sheet metal Backing: 0.036 inch thick.

3. Fastners: ASTM C1002 self-piercing self-tapping screws.
4. Anchroage Devices: Power actuated.
5. Touch-Up Primer for Corrosion Protected Surfaces: SSPC-Paint 20 Type I - Inorganic.

2.4 BOARD MATERIALS

A. Manufacturers - Gypsum-Based Board:
1. CertainTeed Corporation: www.certainteed.com/#sle.
2. Georgia-Pacific Gypsum: www.gpgypsum.com/#sle.
3. Gold Bond Building Products, LLC provided by National Gypsum Company: www.goldbondbuilding.com/#sle.
4. PABCO Gypsum: www.pabcogypsum.com/#sle.
5. USG Corporation: www.usg.com/#sle.

B. Gypsum Wallboard: Paper-faced gypsum panels as defined in ASTM C1396/C1396M; sizes to minimize joints in place; ends square cut.
1. Application: Use for vertical surfaces and ceilings, unless otherwise indicated.
2. Glass mat faced, water-resistant gypsum panels, as defined in ASTM C1658/C1658M, suitable for paint finish, of the same core type and thickness may be substituted for paper-faced board.
3. Mold Resistance: Score of 10, when tested in accordance with ASTM D3273.
a. Mold-resistant board is required whenever board is being installed before the building is enclosed and conditioned.
4. At Assemblies Indicated with Fire-Resistance Rating: Use type required by indicated tested assembly; if no tested assembly is indicated, use Type X or Type C board, UL (DIR) listed.
5. Thickness:
a. Vertical Surfaces: 5/8 inch, or as indicated on drawings.
b. Flexible to bend, fit radii: 1/4 inch, .
c. Multi-Layer Assemblies: Thicknesses as indicated on drawings.
6. Long Edges: Tapered.

C. Impact Resistant Wallboard:
1. Application: High traffic area, corridors, hallways, lobbies, vestibules.
2. Surface Abrasion: Level 2, minimum, when tested in accordance with ASTM C1629/C1629M.
3. Indentation: Level 1, minimum, when tested in accordance with ASTM C1629/C1629M.
4. Soft Body Impact: Level 3, minimum, when tested in accordance with ASTM C1629/C1629M.
5. Hard Body Impact: Level 2, minimum, when tested in accordance with ASTM C1629/C1629M.
6. Mold Resistance: Score of 10, when tested in accordance with ASTM D3273.
7. Type: Fire-resistance-rated Type X or Type C, UL (DIR) listed.
8. Thickness: 5/8 inch.
9. Edges: Tapered.
10. Basis of Design Paper-Faced Products:
a. USG Corporation; Sheetrock Brand Mold Tough VHI Firecode X Panels 5/8 in.: www.usg.com/#sle.

D. Tile Backing Board:
1. Mold Resistance: Score of 10, when tested in accordance with ASTM D3273.
2. Cement-Based Board: Non-gypsum-based; aggregated Portland cement panels with glass fiber mesh embedded in front and back surfaces complying with ANSI A118.9 or ASTM C1325.
a. Application: Wet areas - vertical and horizontal surfaces.
b. Thickness: 1/2 inch, unless otherwise indicated.
3. Glass Mat, Water- and Mold-resistant Gypsum Backer Board as defined in ASTM C1178/C1178M.
a. Application: All non-wet areas.
b. Mold Resistance: Score of 10, when tested in accordance with ASTM D3273.
c. Fire-Resistance-Rated Type: Type X core, thickness 5/8 inch, or as indicated on drawings.

E. Ceiling Board: Special sag resistant gypsum ceiling board as defined in ASTM C1396/C1396M; sizes to minimize joints in place; ends square cut.
1. Application: Ceilings, unless otherwise indicated.

2. Thickness: 1/2 inch.
3. Edges: Tapered.

F. Acoustical Sound Dampening, Water and Mold-resistant Wall and Ceiling Board: Two layers of heavy paper-faced, high-density gypsum board separated by a viscoelastic polymer layer.
1. Fire-Resistance-Rated Type: Type X core, thickness: 5/8 inch.
2. Long Edges: Tapered.
3. Mold Resistance: Score of 10, when tested in accordance with ASTM D3273.
4. Basis of Design Product:
a. Gold Bond Building Products, LLC provided by National Gypsum Company; Gold Bond SoundBreak XP Wall Board: www.goldbondbuilding.com/#sle.
b. PABCO Gypsum; QuiteRock ES: www.pabcogypsum.com/#sle.

2.5 GYPSUM BOARD ACCESSORIES

A. Acoustic and Fire Rated Insulation: ASTM C665; preformed mineral-fiber, friction fit type, unfaced; thickness as required for STC or fire rating indicated on Drawings.
1. Basis of Design:
a. Rockwool, Inc.; AFB Evo.: www.rockwool.com/#sle.

B. Fire Rated Assembly Insulation: Flexible glass fiber blanket Insulation, complying with ASTM C665; friction fit; thickness as required for fire rating indicated on Drawings.
1. Flame Spread Index: 25 or less, when tested in accordance with ASTM E84.
2. Smoke Developed Index: 450 or less, when tested in accordance with ASTM E84.
3. Basis of Design:
a. Owens Corning Corporation; EcoTouch PINK FIBERGLAS Insulation, unfaced: www.ocbuildingspec.com/#sle.

C. Finishing Accessories: ASTM C1047, extruded aluminum alloy (6063 T5) or galvanized steel sheet ASTM A924/A924M G90, unless noted otherwise.
1. Types: As detailed or required for finished appearance.
2. Special Shapes: In addition to conventional corner bead and control joints, provide U-bead at exposed panel edges.

D. Decorative Metal Trim:
1. Material: Extruded aluminum alloy 6063-T5 temper.
2. Finish: Factory powder coat finish, in custom color to match Architect's sample.
3. Shapes: Expansion (control) joint.
4. Basis of Design manufacturer:
a. Fry Reglet Corporation.
b. Gordon, Inc.
5. Finish: Factory powder coat finish, in custom color to match Architect's sample.

E. Joint Materials: ASTM C475/C475M and as recommended by gypsum board manufacturer for project conditions.

F. Finishing Compound: Surface coat and primer, takes the place of skim coating.

G. Screws for Fastening of Gypsum Panel Products to Cold-Formed Steel Studs Less than 0.033 inches in Thickness and Wood Members: ASTM C1002; self-piercing tapping screws, corrosion-resistant.

H. Putty Pad Sealant: Control noise transmission and fire resistance at electrical boxes and other penetrations.

PART 3 EXECUTION

3.1 EXAMINATION

A. Verify that project conditions are appropriate for work of this section to commence.

B. Examine panels before installation. Reject panels that are wet, moisture damaged, and mold damaged.

C. Proceed with installation only after unsatisfactory conditions have been corrected.

3.2 GENERAL BOARD INSTALLATION

A. Comply with ASTM C840 and GA-216.

B. Install ceiling panels across framing to minimize the number of abutting end joints and to avoid abutting end joints in central area of each ceiling. Stagger abutting end joints of adjacent panels not less than one framing member.

C. Install panels with face side out. Butt panels together for a light contact at edges and ends with not more than 1/16 inch of open space between panels. Do not force into place.

D. Locate edge and end joints over supports, except in ceiling applications where intermediate supports or gypsum board back-blocking is provided behind end joints. Do not place tapered edges against cut edges or ends. Stagger vertical joints on opposite sides of partitions. Do not make joints other than control joints at corners of framed openings.

E. Form control and expansion joints with space between edges of adjoining gypsum panels.

F. Cover both faces of support framing with gypsum panels in concealed spaces (above ceilings, etc.), except in chases braced internally.

1. Unless concealed application is indicated or required for sound, fire, air, or smoke ratings, coverage may be accomplished with scraps of not less than 8 square foot in area.
2. Fit gypsum panels around ducts, pipes, and conduits.
3. Where partitions intersect structural members projecting below underside of floor/roof slabs and decks, cut gypsum panels to fit profile formed by structural members; allow 1/4 to 3/8 inch wide joints to install sealant.

G. Isolate perimeter of gypsum board applied to non-load-bearing partitions at structural abutments. Provide 1/4 inch to 1/2 inch wide spaces at these locations and trim edges with edge trim where edges of panels are exposed. Seal joints between edges and abutting structural surfaces with acoustical sealant.

H. Perimeter Joints and Penetrations Through Gypsum Board Assemblies:

1. At Fire-Resistant Rated Assemblies: Comply with Section 078400 - Firestopping.
2. At STC-Rated Assemblies: Seal construction at perimeters, behind control joints, and at openings and penetrations with a continuous bead of acoustical sealant. Install acoustical sealant at both faces of partitions at all perimeters and all through penetrations. Comply with ASTM C919 and with manufacturer's written instructions for locating edge trim and closing off sound-flanking paths around or through assemblies, including sealing partitions above acoustical ceilings.
3. Comply with requirements in other Section(s), as indicated on drawings, and the following:
   a. ASTM C840 paragraph 22.4.4: All cut-outs shall be back filled with compound used for taping and finishing so that there is no opening larger than 1/4 inch between the gypsum board and the penetrating element.
   b. GA-216 paragraph 19.9.1: All cut edges and openings around pipes and fixtures shall be caulked flush with water-resistant flexible sealant.

I. Install sound attenuation blankets before installing gypsum panels unless blankets are readily installed after panels have been installed on one side.

3.3 INSTALLATION OF INTERIOR BOARD

A. Install interior board in the following locations and as:

1. Glass Mat, Water and Mold Resistant Interior Gypsum Board Type X:
   a. Vertical and horizontal surfaces installed prior to completion of building envelope.
   b. At wet walls in toilet rooms and other areas not indicated to receive ceramic tile.
   c. Interior surface of exterior walls.
   d. Cast p olymer shower wall backer.
2. Cementitious Backer Board: At shower and other similar wet walls to receive ceramic tile.
3. Flexible Type: Apply in double layer at curved assemblies.
4. Acoustical Sound Dampening, Type X: At sound-rated assemblies.
5. Impact-Resistant, Type X:
   a. At vertical surfaces within corridors, hallways, lobbies, vestibules.
   b. At non-fire-rated locations, provide impact-resistant gypsum board installed from floor level to a height no less than 6 inches above finished ceiling, with Type X board from top of impact resistant board to underside of structure.
6. Type C: Where required for specific fire-resistance rated assembly indicated.

7. Type X: Vertical and horizontal surfaces unless otherwise indicated.

B. Single-Layer Application:

1. On ceilings, apply gypsum panels before wall/partition board application to greatest extent possible and at right angles to framing unless otherwise indicated.
2. On partitions/walls, apply gypsum panels vertically (parallel to framing) unless otherwise indicated or required by fire-resistance-rated assembly, and minimize end joints.
   a. Stagger abutting end joints not less than one framing member in alternate courses of panels.
   b. At stairwells and other high walls, install panels horizontally unless otherwise indicated or required by fire-resistance-rated assembly.
3. Fastening Methods: Apply gypsum panels to supports with steel drill screws.

C. Multilayer Application:

1. On ceilings, apply gypsum board indicated for base layers before applying base layers on walls/partitions; apply face layers in same sequence. Apply base layers at right angles to framing members and offset face-layer joints one framing member, 16 inches minimum, from parallel base-layer joints, unless otherwise indicated or required by fire-resistance-rated assembly.
2. On partitions/walls, apply gypsum board indicated for base layers and face layers vertically (parallel to framing) with joints of base layers located over stud or furring member and face-layer joints offset at least one stud or furring member with base-layer joints unless otherwise indicated or required by fire-resistance-rated assembly. Stagger joints on opposite sides of partitions.
3. On Z-shaped furring members, apply base layer vertically (parallel to framing) and face layer either vertically (parallel to framing) or horizontally (perpendicular to framing) with vertical joints offset at least one furring member. Locate edge joints of base layer over furring members.
4. Fastening Methods: Fasten base layers and face layers separately to supports with screws.

D. Curved Surfaces:

1. Install panels horizontally (perpendicular to supports) and unbroken, to extent possible, across curved surface plus 12 nch long straight sections at ends of curves and tangent to them.
2. For double-layer construction, fasten base layer to studs with screws 16 inches on center. Center gypsum board face layer over joints in base layer, and fasten to studs with screws spaced 12 inches on center.

3.4 INSTALLATION OF TILE BACKING PANELS

A. Glass-Mat, Water-Resistant Backing Panels: Comply with manufacturer's written installation instructions and install at locations indicated to receive tile. Install with 1/4 inch gap where panels abut other construction or penetrations.

B. Cementitious Backer Units: ANSI A108.01, at shower and other similar wet wall locations indicated to receive tile, as a tile underlayment at wood floors, and where indicated on drawings.

C. Where tile backing panels abut other types of panels in same plane, shim surfaces to produce a uniform plane across panel surfaces.

3.5 WALL FRAMING INSTALLATION

A. Metal Framing: Install in accordance with ASTM C1007AISI S220 and manufacturer's instructions.

B. Studs: Space studs as indicated.

1. Extend partition framing to structure where indicated and to ceiling in other locations.
2. Partitions Terminating at Ceiling: Attach ceiling runner securely to ceiling track in accordance with manufacturer's instructions.

3.6 CEILING AND SOFFIT FRAMING

A. Comply with requirements of ASTM C754.

B. Install furring after work above ceiling or soffit is complete. Coordinate the location of hangers with other work.

C. Install furring independent of walls, columns, and above-ceiling work.

D. Securely anchor hangers to structural members or embed them in structural slab. Space hangers as required to limit deflection to criteria indicated. Use rigid hangers at exterior soffits.

E. Space main carrying channels at maximum 72 inches on center, and not more than 6 inches from wall surfaces. Lap splice securely.
F. Securely fix carrying channels to hangers to prevent turning or twisting and to transmit full load to hangers.
G. Place furring channels perpendicular to carrying channels, not more than 2 inches from perimeter walls, and rigidly secure. Lap splices securely.
H. Reinforce openings in suspension system that interrupt main carrying channels or furring channels with lateral channel bracing. Extend bracing minimum 24 inches past each opening.
I. Laterally brace suspension system.

3.7 ACOUSTIC ACCESSORIES INSTALLATION

A. Acoustic Insulation: Place tightly within spaces, around cut openings, behind and around electrical and mechanical items within partitions, and tight to items passing through partitions.
B. Acoustic Sealant: Install in accordance with manufacturer's instructions.

3.8 BOARD INSTALLATION

A. Comply with ASTM C840, GA-216, and manufacturer's instructions. Install to minimize butt end joints, especially in highly visible locations.
B. Double-Layer, Nonrated: Use gypsum board for first layer, placed parallel to framing or furring members, with ends and edges occurring over firm bearing. Place second layer perpendicular to framing or furring members. Offset joints of second layer from joints of first layer.
C. Fire-Resistance-Rated Construction: Install gypsum board in strict compliance with requirements of assembly listing.
D. Cementitious Backing Board: Install over steel framing members where indicated, in accordance with ANSI A108.11 and manufacturer's instructions.
E. Curved Surfaces: Apply gypsum board to curved substrates in accordance with GA-226.

3.9 INSTALLATION OF TRIM AND ACCESSORIES

A. General: For trim with back flanges intended for fasteners, attach to framing with same fasteners used for panels. Otherwise, attach trim according to manufacturer's written instructions.
B. Control Joints: Place control joints in accodance with ASTM C840, consistent with lines of building spaces, and as indicated.
   1. Not more than 30 feet apart on walls and ceilings over 50 feet long.
   2. Specific locations approved by Architect for visual effect
C. Interior Trim: Install in the following locations:
   1. Cornerbead: Use at outside corners, using longest practical lenghs.
   2. LC-Bead: Use at exposed panel edges.
   3. L-Bead: Use where indicated.
   4. U-Bead: Use at exposed panel edges.
   5. Curved-Edge Cornerbead: Use at curved openings.
D. Edge Trim: Install at locations where gypsum board abuts dissimilar materials and as indicated on drawings.
E. Decorative Trim: Install at locations shown on drawings and in accordance with manufacturer's instructions.
F. Aluminum Trim: Install in locations indicated on drawings.

3.10 JOINT TREATMENT

A. General: Treat gypsum board joints, interior angles, edge trim, control joints, penetrations, fastener heads, surface defects, and elsewhere as required to prepare gypsum board surfaces for decoration. Promptly remove residual joint compound from adjacent surfaces.
B. Prefill open joints, rounded or beveled edges, and damaged surface areas.
C. Apply joint tape over gypsum board joints, except for trim products specifically indicated as not intended to receive tape.
D. Glass Mat Faced Gypsum Board and Exterior Glass Mat Faced Sheathing: Use fiberglass joint tape finish with setting type joint compound and finish according to manufacturer's written instructions.

E. Paper Faced Gypsum Board: Use paper joint tape, embed with drying type joint compound and finish with drying type joint compound.

F. Cementitious Backing Board: Fill and finish joints and corners as according to manufacturer's written instructions.

G. Finish gypsum board in accordance with levels defined in ASTM C840, as follows:

1. Level 4: Walls and ceilings to receive paint finish or wall coverings, unless otherwise indicated.
2. Level 3: Walls to receive orange peel fine textured wall finish and utility areas.
3. Level 2: In concealed areas, behind cabinetry, and on backing board to receive tile finish.
4. Level 1: Fire-resistance-rated wall areas above finished ceilings, whether or not accessible in the completed construction.

H. Tape, fill, and sand exposed joints, edges, and corners to produce smooth surface ready to receive finishes.

1. Feather coats of joint compound so that camber is maximum 1/32 inch.

3.11 TOLERANCES

A. Maximum Variation of Finished Gypsum Board Surface from True Flatness: 1/8 inch in 10 feet in any direction.

3.12 PROTECTION

A. Protect installed gypsum board assemblies from subsequent construction operations, weather, condensation and direct sunlight.

B. Protect adjacent surfaces from drywall compound and promptly remove from floors and other non-drywall surfaces. Repair surfaces stained, marred, or otherwise damaged during drywall application.

C. Remove and replace panels that are wet, moisture damaged, and mold damaged.

1. Indications that panels are wet or moisture damaged include, but are not limited to, discoloration, sagging, or irregular shape.
2. Indications that panels are mold damaged include, but are not limited to, fuzzy or splotchy surface contamination and discoloration.

END OF SECTION

SECTION 093000 - TILING

PART 1 GENERAL

1.1 SECTION INCLUDES

A. Tile for floor applications.
B. Tile for wall applications.
C. Waterproofing.

1.2 RELATED REQUIREMENTS

A. Section 079200 - Joint Sealants: Sealing joints between tile work and adjacent construction and fixtures.
B. Section 092116 - Gypsum Board Assemblies: Tile backing board.
C. Section 102819 - Shower Enclosures: Solid surface shower floor pan and enclosure walls.

1.3 REFERENCE STANDARDS

A. ANSI A108.01 - General Requirements: Subsurfaces and Preparations by Other Trades; 2021a.
B. ANSI A108.02 - General Requirements: Materials, Environmental, and Workmanship; 2019.
C. ANSI A108.11 - American National Standard Specifications for Interior Installation of Cementitious Backer Units; 2023.
D. ANSI A108.17 - Installation of Crack Isolation Membranes for Thin-Set Ceramic Tile and Dimension Stone; 2019.
E. ANSI A108.19 - American National Standard Specifications for Interior Installation of Gauged Porcelain Tiles and Gauged Porcelain Tile Panels/Slabs by the Thin-Bed Method Bonded with Modified Dry-Set Cement Mortar or Improved Modified Dry-Set Cement Mortar; 2020.
F. ANSI A108.20 - American National Standard Specifications for Exterior Installation of Gauged Porcelain Tiles and Gauged Porcelain Tile Panels/Slabs; 2020.
G. ANSI A118.3 - American National Standard Specifications for Chemical Resistant, Water Cleanable Tile-Setting and -Grouting Epoxy and Water Cleanable Tile-Setting Epoxy Adhesive; 2021.
H. ANSI A118.10 - American National Standard Specifications for Load Bearing, Bonded, Waterproof Membranes for Thin-Set Ceramic Tile and Dimension Stone Installation; 2023.
I. ANSI A118.12 - American National Standard Specifications for Crack Isolation Membranes for Thin-Set Ceramic Tile and Dimension Stone Installation; 2014 (Reaffirmed 2024).
J. ANSI A118.15 - American National Standard Specifications for Improved Modified Dry-Set Cement Mortar; 2023.
K. ANSI A137.1 - American National Standard Specifications for Ceramic Tile; 2022.
L. ANSI A326.3 - American National Standard Test Method for Measuring Dynamic Coefficient of Friction of Hard Surface Flooring Materials; 2021.
M. ASTM E699 - Standard Specification for Agencies Involved in Testing, Quality Assurance, and Evaluating of Manufactured Building Components; 2016.
N. ASTM F710 - Standard Practice for Preparing Concrete Floors to Receive Resilient Flooring; 2022.
O. ASTM F1869 - Standard Test Method for Measuring Moisture Vapor Emission Rate of Concrete Subfloor Using Anhydrous Calcium Chloride; 2023.
P. ASTM F2170 - Standard Test Method for Determining Relative Humidity in Concrete Floor Slabs Using in situ Probes; 2019a.
Q. ASTM F3010 - Standard Practice for Two-Component Resin Based Membrane-Forming Moisture Mitigation Systems for Use Under Resilient Floor Coverings; 2018.
R. TCNA (HB) - Handbook for Ceramic, Glass, and Stone Tile Installation; 2025.

1.4 DEFINITIONS

A. Face Size: Actual tile size, excluding spacer lugs.
B. Module Size: Actual tile size plus joint width indicated.

1.5 ADMINISTRATIVE REQUIREMENTS

A. Coordinate layout and installation of slab depressions to accommodate layout, height, and slope (if indicated) of tiling assemblies

B. Preinstallation Meeting: Convene a preinstallation meeting 2 weeks before starting work of this section.

1. Review and finalize construction schedule and verify availability of materials, Installer's personnel, equipment, and facilities needed to make progress and avoid delays.
2. Review requirements in ANSI A108.01 for substrates and for preparation by other trades.
3. Review surface preparation, substrate condition, and pretreatment.
4. Review installation procedures, including special details for waterproofing, crack isolation, and showers.
5. Review requirements for special warranty.
6. Review testing and inspection procedures.
7. Review procedures for protection and repair after installation.
8. Document proceedings, including corrective measures and actions required, and furnish copy of record to each participant.

1.6 SUBMITTALS

A. See Section 013000 - Administrative Requirements for submittal procedures.

B. Product Data: Provide manufacturers' data sheets on tile, mortar, grout, and accessories. Include instructions for using grouts and adhesives.

C. Shop Drawings: Indicate tile layout, patterns, junctions with dissimilar materials, ceramic accessories, and setting details.

D. Samples for Initial Selection: Grout and accessories involving color selection.

E. Samples for Verification:

1. Full-size units of each type of trim and accessory for each color and finish required.

F. Certificate: Certify products of this section meet or exceed specified requirements.

G. Master Grade Certificate: Submit for each type of tile, signed by the tile manufacturer and tile installer.

H. Installer's qualification statement.

I. Maintenance Materials: Furnish the following for Owner's use in maintenance of project.

1. See Section 016000 - Product Requirements, for additional provisions.
2. Extra Tile, Base and Trim Pieces: 2 percent of each size, color, and surface finish combination of the amount installed.
3. Grout: Furnish quantity of grout equal to 2 percent of amount installed for each type, composition, and color indicated

J. Sustainable Design Submittals: The materials in this Section are part of the overall sustainable design reporting required to meet project sustainable design goals, including mandatory non-residential measures required by California Green Building Standards Code, Title 24, Part 11 (CALGreen).composition, and color indicated

1. Environmental Product Declarations: Provide submittals in accordance with Section 018113 - Sustainable Design Requirements.

K. Product Test Reports: For tile-setting, grouting, waterproof membranes, and crack isolation membrane.

L. Evaluation Reports: For shower pan liners, from IAPMO or other qualified evaluation agency acceptable to authorities having jurisdiction.

M. Field quality-control reports.

N. Sample Warranties: For special warranty.

1.7 QUALITY ASSURANCE

A. Manufacturer Qualifications: Company specializing in manufacturing the types of products specified in this section, with minimum 5 years of documented experience.

B. Installer Qualifications:

1. Company specializing in performing tile installation, with minimum of 5 years of documented experience.

C. Field Testing Agency: Qualified in accordance with ASTM E699 for testing and inspections indicated and acceptable to Owner, Architect, and waterproofing manufacturer.

1.8 DELIVERY, STORAGE, AND HANDLING

A. See Section 017419 - Construction Waste Management and Disposal for packaging waste requirements.
B. Protect adhesives from freezing or overheating in accordance with manufacturer's instructions.
C. Deliver and store packaged materials in original containers with seals unbroken and labels intact until time of use. Comply with requirements in ANSI A137.1 for labeling tile packages.
D. Store tile and cementitious materials on elevated platforms, under cover, and in a dry location.
E. Store aggregates where grading and other required characteristics can be maintained and contamination can be avoided.
F. Store liquid materials in unopened containers.

1.9 FIELD CONDITIONS

A. Do not install solvent-based products in an unventilated environment.
B. Environmental Limitations: Do not install tile until construction in spaces is complete and ambient temperature and humidity conditions are maintained at the levels indicated in referenced standards and manufacturer's written instructions.

1.10 WARRANTY

A. Special Warranty: Manufacturer's standard or customized system warranty in which manufacturer and installer agree to repair or replace components of ceramic tile system (ceramic tile, setting materials, grout, waterproof membrane) that fail to comply with requirements or that fail in materials or workmanship within specified warranty period.
   1. Warranty includes removing and reinstalling ceramic tile, setting materials, grout, waterproof membrane, and accessories.
   2. Warranty Period: 10 years from date of Substantial Completion.

PART 2 PRODUCTS

2.1 SOURCE LIMITATIONS

A. Source Limitations for Tile: Obtain tile from single source or producer.
   1. Obtain tile of each type and color or finish from same production run and of consistent quality in appearance and physical properties for each contiguous area.
B. Source Limitations for Setting and Grouting Materials: Obtain ingredients of a uniform quality for each mortar, adhesive, and grout component from single manufacturer and each aggregate from single source or producer.

2.2 PRODUCTS, GENERAL

A. ANSI Ceramic Tile Standard: Provide tile that complies with ANSI A137.1 for types, compositions, and other characteristics indicated.
   1. Provide tile complying with Standard grade requirements unless otherwise indicated.
B. ANSI Standards for Tile Installation Materials: Provide materials complying with ANSI A108.02, ANSI standards referenced in other Part 2 articles, ANSI standards referenced by TCNA installation methods specified in tile installation schedules, and other requirements specified.
C. Factory Blending: For tile exhibiting color variations within ranges, blend tile in factory and package so tile units taken from one package show same range in colors as those taken from other packages and match approved Samples.
D. Sustainable Design Requirements:
   1. Provide ceramic tile adhesives with a VOC content of 65 g/L or less.
E. Dynamic Coefficient of Friction ANSI A326.3. Product use classification:
   1. Interior, Dry (ID) - Min dry DCOF value of 0.42

2. Interior, Wet (IW) - Min wet DCOF value of 0.42
3. Interior, Wet Plus (IW+) - Min wet DCOF value of 0.50
4. Exterior, Wet (EW) - Min wet DCOF value of 0.55
5. Oils / Greases (O/G) - Min wet DCOF value of 0.55

2.3 TILE

A. Ceramic / Porcelain / Quarry Tile:
1. Basis-of-Design product: As indicated on drawings
2. Composition: As indicated on drawings
3. Module Size: As indicated on drawings
4. Tile Color and Pattern: As indicated on drawings
5. Grout Color: As indicated on drawings

2.4 SETTING MATERIALS

A. Provide setting and grout materials from same manufacturer.
B. Improved Latex-Portland Cement Mortar Bond Coat (Thin-set): ANSI A118.15.
1. Products:
a. LATICRETE International, Inc; MULTIMAX LITE: www.laticrete.com/#sle.
b. Mapei Corporation; Keraflex Super: www.mapei.com/#sle.
2. Provide prepackaged, dry-mortar mix containing dry, redispersible, vinyl acetate or acrylic additive to which only water must be added at Project site.
3. Wall applications, provide mortar that complies with requirements for nonsagging mortar in addition to the other requirements in ANSI A118.15 .
4. Provide products eligible for manufacturer's system warranty as specified in Warranty Article.
C. Epoxy Adhesive and Mortar Bond Coat: ANSI A118.3.
1. Applications: Where indicated on drawings.
2. Products:
a. LATICRETE International, Inc; LATICRETE LATAPOXY 300 Adhesive: www.laticrete.com/#sle.
b. Mapei Corporation; Kerapoxy SB: www.mapei.com/#sle.

2.5 GROUTS

A. Provide setting and grout materials from same manufacturer.
B. Epoxy Grout: ANSI A118.3 chemical resistant and water-cleanable epoxy grout.
1. Color: As indicated on drawings.
2. Products:
a. LATICRETE International, Inc; LATICRETE SPECTRALOCK PRO Premium Grout: www.laticrete.com/#sle.
b. Mapei Corporation; Kerapoxy CQ: www.mapei.com/#sle.
3. Provide product capable of withstanding continuous and intermittent exposure to temperatures of up to 140 and 212 degrees F, respectively, and certified by manufacturer for intended use.
4. Provide products eligible for manufacturer's system warranty as specified in Warranty Article

2.6 MAINTENANCE MATERIALS

A. Tile Sealant: Gunnable, silicone, siliconized acrylic, modified silane polymer, or urethane sealant; moisture- and mildew-resistant type.
1. Applications: Between tile and plumbing fixtures.
B. Tile Sealer: Stain protection for ceramic tile, glazed tile, porcelain tile, and quarry tile.
1. Manufacturer's standard product for sealing grout joints and that does not change color or appearance of grout.
C. Grout Release: Temporary, water-soluble pre-grout coating.

1. Manufacturer's recommended product that is formulated to temporarily protect exposed surfaces of tile against adherence of mortar and grout; compatible with tile, mortar, and grout products; and easily removable after grouting is completed without damaging grout or tile.

D. Tile Cleaner: A neutral cleaner capable of removing soil and residue without harming tile and grout surfaces, specifically approved for materials and installations indicated by tile and grout manufacturers.

2.7 ACCESSORY MATERIALS

A. Waterproofing & Crack Isolation Membrane at Floors: Specifically designed for bonding to cementitious substrate under thick mortar bed or thin-set tile; complying with ANSI A118.10.
   1. Crack Resistance: No failure at 1/16-inch gap, minimum; comply with ANSI A118.12.
   2. Fluid or Trowel Applied Type:
      a. Material: Synthetic rubber.
      b. Thickness: 25 mils, minimum, dry film thickness.
      c. Products:
         1) LATICRETE International, Inc; LATICRETE HYDRO BAN: www.laticrete.com/#sle.
         2) Mapei Corporation; Mapelastic AquaDefense: www.mapei.com/#sle.

B. Mesh Tape: 2 inch wide self-adhesive fiberglass mesh tape.

C. Moisture and Alkalinity Control System: As recommended by ceramic tiling manufacturer for mitigation of concrete slabs with moisture emissions and/or alkalinity measurements that are not within ceramic tiling manufacturer’s written limitations.

D. Membrane Accessories: Provide other materials and accessories, not specifically described, but required for a complete and proper membrane installation, as selected by the Contractor and approved by the membrane system manufacturer as compatible, subject to review of the Architect.

E. Metal Edge Strips: Angle or L-shaped, height to match tile and setting-bed thickness, metallic or combination of metal and PVC or neoprene base, designed specifically for flooring applications; provide in metal as indicated on drawings.

PART 3 EXECUTION

3.1 EXAMINATION

A. Verify subfloor surfaces are smooth and flat within tolerances specified for that type of work and are ready to receive tile.

B. Verify wall surfaces are smooth and flat within tolerances specified for that type of work, are dust-free, and are ready to receive tile.

C. Verify that subfloor surfaces are dust free and free of substances that could impair bonding of setting materials to subfloor surfaces.

D. Cementitious Subfloor Surfaces: Verify that substrates are ready for tiling installation by testing for moisture and alkalinity (pH).
   1. Testing Agency: Engage a qualified testing agency to perform the following tests, unless otherwise recommended by tile / membrane manufacturer.
   2. Test as Follows:
      a. Alkalinity (pH): ASTM F710.
      b. Internal Relative Humidity: ASTM F2170.
      c. Moisture Vapor Emission: ASTM F1869.
   3. Obtain instructions if test results are not within limits recommended by tiling material manufacturer and setting material manufacturer.
   4. Submit copy of test reports for moisture and alkalinity content of concrete slab, and bond test, stating date of test, person conducting the test, and the areas tested.
      a. Proceed with installation only after substrates pass testing.
   5. Install moisture and alkalinity control system according to ASTM F3010 and manufacturer's written instructions to produce a uniform, monolithic surface free of surface deficiencies such as pin holes, fish eyes, and voids. Install primers as required to comply with manufacturer's written instructions.

E. Verify that concrete substrates for tile floors installed with bonded mortar bed or thinset mortar comply with surface finish requirements in ANSI A108.01 for installations indicated.

1. Verify that surfaces that received a steel trowel finish have been mechanically scarified.
2. Verify that protrusions, bumps, and ridges have been removed by sanding or grinding.

F. Verify that required floor-mounted and wall mounted utilities, anchors, frames and similar items are in correct location and completed.

G. Follow moisture and alkalinity remediation procedures in Section 035400 - Cast Underlayment

H. Proceed with installation only after unsatisfactory conditions have been corrected.

3.2 PREPARATION

A. Vacuum clean surfaces and damp clean.

B. Seal substrate surface cracks with filler.

C. Install backer board in accordance with ANSI A108.11 and board manufacturer's instructions. Tape joints and corners, cover with skim coat of setting material to a feather edge.

D. Substrate Tolerance for Ceramic Tile Floors Installed with Thinset Mortar: Where substrate tolerances are not in compliance with ANSI A108.01 for installations indicated, provide a level surface in accordance with ANSI A108.01, manufacturer’s written instructions, and the following:

1. Measure surface, grind high spots and protrusions, fill low spots, so gap at any point between concrete surface and an unleveled, freestanding, straightedge resting on two high spots and place anywhere on the surface does not exceed the following:
   a. Ceramic tile with all edges less than 15 inches:
      1) 1/4 inch in 10 feet, and
      2) 1/16 inch in 12 inches.
   b. Ceramic tile with at least one edge 15 inches in length or longer:
      1) 1/8 inch in 10 feet, and
      2) 1/16 inch in 24 inches.

E. Blending: For tile exhibiting color variations, verify that tile has been factory blended and packaged so tile units taken from one package show same range of colors as those taken from other packages and match approved Samples. If not factory blended, either return to manufacturer or blend tiles at Project site before installing.

3.3 INSTALLATION - GENERAL

A. Cut and fit tile to penetrations through tile, leaving sealant joint space. Form corners and bases neatly. Align wall joints.

B. Place tile joints uniform in width, subject to variance in tolerance allowed in tile size. Make grout joints without voids, cracks, excess mortar or excess grout, or too little grout.

C. Joint Widths: Unless otherwise indicated, provide joint widths in accordance with ANSI A108.01, ceramic tile manufacturer's written recommendation, and not less than the following:

1. Ceramic Mosaic Tile: 1/8 inch.
2. Glazed Wall Tile: 1/8 inch.
3. Porcelain Tile:
   a. 3/8 inch: For porcelain tile with at least one edge 15 inches or longer.
   b. 1/4 inch: For porcelain tile with all edges less than 15 inches.

D. Expansion Joints: Provide expansion joints and other sealant-filled joints, including control, contraction, and isolation joints, where indicated, or if not indicated, in locations as approved by Architect for visual effect and in accordance with TCNA guidelines. Form joints during installation of setting materials, mortar beds, and tile. Do not saw-cut joints after installing tiles.

1. Where joints occur in concrete substrates, locate joints in tile surfaces directly above them.
2. Prepare joints and apply sealants as specified in Section 079200 - Joint Sealants.

E. Form internal angles square and external angles bullnosed.

F. Metal Edge Strips: Install at locations indicated and where exposed edge of tile flooring meets carpet, wood, or other flooring that finishes flush with or below top of tile and no threshold is indicated.

G. Sound tile after setting. Replace hollow sounding units.

H. Keep control and expansion joints free of mortar, grout, and adhesive.

I. Prior to grouting, allow installation to completely cure; minimum of 48 hours.

J. At changes in plane and tile-to-tile control joints, use tile sealant instead of grout, with either bond breaker tape or backer rod as appropriate to prevent three-sided bonding.

K. Extend tile work into recesses and under or behind equipment and fixtures to form complete covering without interruptions unless otherwise indicated. Terminate work neatly at obstructions, edges, and corners without disrupting pattern or joint alignments.

L. Accurately form intersections and returns. Perform cutting and drilling of tile without marring visible surfaces. Carefully grind cut edges of tile abutting trim, finish, or built-in items for straight aligned joints. Fit tile closely to electrical outlets, piping, fixtures, and other penetrations so plates, collars, or covers overlap tile.

M. Provide manufacturer's standard trim shapes where necessary to eliminate exposed tile edges.

N. Where accent tile differs in thickness from field tile, vary setting-bed thickness so that tiles are flush.

O. Floor Sealer: Apply grout sealer according to grout-sealer manufacturer's written instructions. As soon as grout sealer has penetrated grout joints, remove excess sealer and sealer from tile faces by wiping with soft cloth.

3.4 INSTALLATION - FLOORS - THIN-SET METHODS

A. Over interior concrete substrates, install in accordance with TCNA (HB) Method F205, F205A, with epoxy grout, unless otherwise indicated.

3.5 INSTALLATION - WALL TILE

A. Grout with epoxy grout.

B. Over moisture resistant gypsum wallboard on metal studs, install in accordance with TCNA (HB) Method W243, thin-set with dry-set or latex-Portland cement bond coat, unless otherwise indicated on drawings

3.6 INSTALLATION - WATERPROOF MEMBRANES

A. Install waterproof membrane to comply with ANSI A108.13 and manufacturer's written instructions to produce waterproof membrane of uniform thickness that is bonded securely to substrate.

B. Allow waterproof membrane to cure and verify by testing that it is watertight before installing tile or setting materials over it.

C. Install membrane from shower pan up to ceiling.

3.7 INSTALLATION - CRACK ISOLATION MEMBRANES

A. Install crack isolation membrane to comply with ANSI A108.17 and manufacturer's written instructions to produce membrane of uniform thickness that is bonded securely to substrate.

B. Allow crack isolation membrane to cure before installing tile or setting materials over it.

3.8 ADJUSTING, CLEANING AND PROTECTION

A. Remove and replace tile that is damaged or that does not match adjoining tile. Provide new matching units, installed as specified and in a manner to eliminate evidence of replacement.

B. Clean tile and grout surfaces free of all foreign matter

1. Remove grout residue from tile as soon as possible.
2. Clean grout smears and haze from tile according to tile and grout manufacturer's written instructions but no sooner than 10 days after installation. Use only cleaners recommended by tile and grout manufacturers and only after determining that cleaners are safe to use by testing on samples of tile and other surfaces to be cleaned. Protect metal surfaces and plumbing fixtures from effects of cleaning. Flush surfaces with clean water before and after cleaning.

C. Before final inspection, remove protective coverings and rinse neutral protective cleaner from tile surfaces.

END OF SECTION

SECTION 095100 - ACOUSTICAL CEILINGS

PART 1 GENERAL

1.1 SECTION INCLUDES

A. Interior suspended metal grid ceiling system.
B. Acoustical units.

1.2 RELATED REQUIREMENTS

A. Section 079200 - Joint Sealants: Acoustical sealant.

1.3 REFERENCE STANDARDS

A. ACI CODE-318 - Building Code for Structural Concrete—Code Requirements and Commentary; 2025.
B. ASCE-7 - Minimum Design Loads and Associated Criteria for Buildings and Other Structures; Currently Adopted Edition Cited by Referring Code or Reference Standard.
C. ASTM A641/A641M - Standard Specification for Zinc-Coated (Galvanized) Carbon Steel Wire; 2019 (Reapproved 2025).
D. ASTM A653/A653M - Standard Specification for Steel Sheet, Zinc-Coated (Galvanized) or Zinc-Iron Alloy-Coated (Galvannealed) by the Hot-Dip Process; 2025.
E. ASTM C1513 - Standard Specification for Steel Tapping Screws for Cold-Formed Steel Framing Connections; 2018.
F. ASTM D3273 - Standard Test Method for Resistance to Growth of Mold on the Surface of Interior Coatings in an Environmental Chamber; 2021.
G. ASTM D3274 - Standard Test Method for Evaluating Degree of Surface Disfigurement of Paint Films by Fungal or Algal Growth, or Soil and Dirt Accumulation; 2009(R21).
H. ASTM C423 - Standard Test Method for Sound Absorption and Sound Absorption Coefficients by the Reverberation Room Method; 2023, with Editorial Revision (2024).
I. ASTM C635/C635M - Standard Specification for Manufacture, Performance, and Testing of Metal Suspension Systems for Acoustical Tile and Lay-in Panel Ceilings; 2022.
J. ASTM C636/C636M - Standard Practice for Installation of Metal Ceiling Suspension Systems for Acoustical Tile and Lay-In Panels; 2019 (Reapproved 2025).
K. ASTM C645 - Standard Specification for Nonstructural Steel Framing Members; 2024.
L. ASTM E84 - Standard Test Method for Surface Burning Characteristics of Building Materials; 2026.
M. ASTM E119 - Standard Test Methods for Fire Tests of Building Construction and Materials; 2024.
N. ASTM E488/E488M - Standard Test Methods for Strength of Anchors in Concrete Elements; 2022.
O. ASTM E580/E580M - Standard Practice for Installation of Ceiling Suspension Systems for Acoustical Tile and Lay-in Panels in Areas Subject to Earthquake Ground Motions; 2024a.
P. ASTM E795 - Standard Practices for Mounting Test Specimens during Sound Absorption Tests; 2023.
Q. ASTM E1190 - Standard Test Methods for Strength of Power-Actuated Fasteners Installed in Structural Members; 2021.
R. ASTM E1264 - Standard Classification for Acoustical Ceiling Products; 2023.
S. ASTM G21 - Standard Practice for Determining Resistance of Synthetic Polymeric Materials to Fungi; 2015, with Editorial Revision (2021).
T. DSA IR 25-2 - Suspended Lay-in Panel Ceiling; 2022.
U. ICC-ES AC70 - Acceptance Criteria for Power-Actuated Fasteners Driven into Concrete, Steel and Masonry Elements; 2019, with Editorial Revision (2021).
V. ICC-ES AC193 - Acceptance Criteria for Mechanical Anchors in Concrete Elements; 2017, with Editorial Revision (2020).

1.4 ADMINISTRATIVE REQUIREMENTS

A. Sequence work to ensure acoustical ceilings are not installed until building is enclosed, sufficient heat is provided, dust generating activities have terminated, and overhead work is completed, tested, and approved.

B. Do not install acoustical units until after interior wet work is dry.

1.5 PREINSTALLATION MEETINGS

A. Preinstallation Conference: Conduct conference at Project site.

1.6 SUBMITTALS

A. Shop Drawings: Indicate grid layout and related dimensioning, junctions with other ceiling finishes, all items installed in ceiling panels (mechanical, electrical, plumbing, fire, telcomm, etc), and structural member attachment.

B. Product Data: Provide data on suspension system components and acoustical units.

C. Samples: Submit two samples 6 by 6 inch in size illustrating material and finish of acoustical units.

D. Samples: Submit two samples each, 6 inches long, of suspension system main runner, cross runner, perimeter molding, and hold-down and seismic clips.

E. Sustainable Design Submittal:

1. Test Reports: For ceiling products, indicating compliance with requirements for low-emitting materials.

F. Manufacturer's Installation Instructions: Indicate special procedures and perimeter conditions requiring special attention.

G. Designer's qualification statement.

H. Manufacturer's qualification statement.

I. Product Test Reports: For each acoustical panel ceiling, for tests performed by a qualified testing agency.

J. Evaluation Reports: For each acoustical panel ceiling suspension system and anchor and fastener type, from ICC-ES or equivalent evaluation agency acceptable to authorities having jurisdiction.

K. Maintenance Materials: Furnish the following for Owner's use in maintenance of project.

1. Extra Acoustical Units and Suspension System Components: 2 percent of each exposed component type and size installed .

1.7 QUALITY ASSURANCE

A. Designer Qualifications for Seismic Design: Perform under direct supervision of a Professional Structural Engineer experienced in design of this work and licensed at the State in which the Project is located.

B. Manufacturer Qualifications: Company specializing in manufacturing the products specified in this section with minimum 10 years documented experience.

1. Manufacturer shall also have a current evaluation report for suspension system, including 7/8 inch perimeter metal edge molding, for use in seismic design categories D, E, F.

C. Installer Qualifications: Company specializing in installing acoustical panel ceilings systems similar in material, design, and extent to that indicated for this Project, whose work has resulted in installations with a record of successful in-service performance, and that employs installers and supervisors who are trained and approved by manufacturer to perform work of this Section.

1.8 DELIVERY, STORAGE, AND HANDLING

A. Before installing acoustical panels, permit them to reach room temperature and a stabilized moisture content.

B. Handle acoustical panels carefully to avoid chipping edges or damaging units in any way.

1.9 FIELD CONDITIONS

A. Environmental Limitations: Do not install acoustical panel ceilings until spaces are enclosed and weathertight, wet-work in spaces is complete and dry, work above ceilings is complete, and ambient temperature and humidity conditions are maintained at the levels indicated for Project when occupied for its intended use.

1. Pressurized Plenums: Operate ventilation system for not less than 48 hours before beginning acoustical panel ceiling installation.

PART 2 PRODUCTS

2.1 MANUFACTURERS

A. Source Limitations: Obtain each type of acoustical ceiling panel and its supporting suspension system from single source from single manufacturer.

B. Basis-of-Design Products: Subject to compliance with requirements, provide products by the following:

1. As indicated on drawings.

2.2 PERFORMANCE REQUIREMENTS

A. Fire-Resistance Rating: Determined in accordance with test procedures in ASTM E119 and complying with the following:

1. Design designations from UL or from the listings of another qualified testing agency.

B. Seismic Performance: Ceiling systems designed to withstand the effects of earthquake motions determined according to ASCE-7 \for Seismic Design Category D, E, or F and complying with the following:

1. Current ICC evaluation report:

a. USG: ESR-1222.

C. Surface-Burning Characteristics: Comply with ASTM E84; testing by a qualified testing agency. Identify products with appropriate markings of applicable testing agency.

1. Flame-Spread Index: Class A according to ASTM E1264.

2. Smoke-Developed Index: 50 or less.

D. Sustainable Design Requirements: Ceiling products shall comply with the requirements of the California Department of Public Health's, Standard Method for the Testing and Evaluation of Volatile Organic Chemical Emissions from Indoor Sources Using Environmental Chambers.

2.3 ACOUSTICAL UNITS

A. Acoustical Units - General: ASTM E1264, Class A.

B. Acoustical Panels: Acoustical Ceiling Tile.

1. Classification: ASTM E1264 Type A.

2. Size: As indicated on drawings.

3. Thickness: Minimum 5/8 inch.

4. Light Reflectance: 0.86 percent, determined in accordance with ASTM E1264.

5. NRC Range: 0.50 to 0.55, determined in accordance with ASTM E1264.

6. Panel Edge: Beveled.

7. Color: As indicated on drawings.

8. Suspension System: Exposed grid.

9. Antimicrobial Treatment: Manufacturer's standard broad spectrum, antimicrobial formulation that inhibits fungus, mold, mildew, and gram-positive and gram-negative bacteria and showing no mold, mildew, or bacterial growth when tested according to ASTM D3273, ASTM D3274, or ASTM G21 and evaluated according to ASTM D3274 or ASTM G21.

C. Acoustical Panels: Non-Woven layered and formed polyester felt fiber panels.

1. Size: As indicated on the drawings.

2. Thickness: 1 inches.

3. Noise Reduction Coefficient (NRC): 0.75 to 0.90 when tested in accordance with ASTM C423 for Type E mounting, per ASTM E795.

4. Panel Edge: Square.

5. Surface Color: As indicated on drawings.

6. Suspension System: Exposed grid.

7. Antimicrobial Treatment: Manufacturer's standard broad spectrum, antimicrobial formulation that inhibits fungus, mold, mildew, and gram-positive and gram-negative bacteria and showing no mold, mildew, or bacterial growth when tested according to ASTM D3273, ASTM D3274, or ASTM G21 and evaluated according to ASTM D3274 or ASTM G21.

2.4 SUSPENSION SYSTEM

A. Metal Suspension Systems - General: Complying with ASTM C635/C635M; die cut and interlocking components, with perimeter moldings, hold-down clips, stabilizer bars, clips, and splices as required.
   1. Materials:
      a. Steel Grid: ASTM A653/A653M, G30 coating, unless otherwise indicated.
         1) Where indicated on drawings, provide coating tested and classified for Severe Environment Performance.

B. Exposed Suspension System: Hot-dipped galvanized steel grid with steel cap.
   1. Applications: Seismic.
   2. Structural Classification: Heavy-duty, when tested in accordance with ASTM C635/C635M.
   3. Components: Main beams and cross tees are double-web steel construction with 15/16 inch type exposed flange design. Exposed surfaces chemically cleansed, capping prefinished galvanized steel in baked polyester paint. Main beams and cross tees shall have rotary stitching.
   4. Profile: As indicated on drawings, if not indicated, manufacturer's standard factory profile.
   5. Color: As indicated on drawings, if not indicated, as selected by Architect.
   6. Basis of Design Products:
      a. As indicated on drawings.

2.5 ACCESSORIES

A. Attachment Devices: Comply with seismic design requirements and as indicated on drawings. Attachment Devices: Size for five times design load indicated in ASTM C635/C635M, Table 1, Direct Hung unless otherwise indicated.
   1. Post-Installed Concrete Anchors: Fabricated from corrosion-resistant materials with allowable load or strength design capacities calculated according to ICC-ES AC193 and ACI CODE-318 greater than or equal to the design load, as determined by testing per ASTM E488/E488M conducted by a qualified testing agency. Special inspection of post-installed concrete anchors shall be in compliance with California Building Code Table 1705.3 and the evaluation report for the anchor.
   2. Power-Actuated Fasteners (PAF): Fastener system of type suitable for application indicated, fabricated from corrosion-resistant materials, with allowable load capacities calculated according to ICC-ES AC70, greater than or equal to the design load, as determined by testing per ASTM E1190 conducted by a qualified testing agency.
      a. PAF shall not be used to anchor diagonal bracing assemblies used to resist seismic loads.
   3. Mechanical Fasteners: ASTM C1513, corrosion-resistant-coated, self-drilling, self-tapping steel drill screws, of sufficient length to penetrate a minimum of three screw-threads into substrate framing.
   4. Miscellaneous Metal Subframing and Clips: ASTM C645, cold-formed, metallic-coated steel sheet ASTM A653/A653M ASTM A653, G40 coating designation unless otherwise indicated.

B. Support Channels and Hangers: Galvanized steel; size and type to suit application, seismic requirements, and ceiling system flatness requirement specified.

C. Hanger Wire: 12 gauge, 0.08 inch galvanized steel wire.
   1. Zinc-Coated, Carbon-Steel Wire: ASTM A641/A641M, Class 1 zinc coating, soft temper, minimum tensile strength of 70 ksi, and not less than 0.106-inch-diameter (#12 gage). From DSA IR 25-2.13.

D. Hold-Down Clips: Manufacturer's standard clips to suit application.

E. Seismic Clips: Manufacturer's standard clips for seismic conditions and to suit application.

F. Seismic Separation Joints: Manufacturer's standard seismic separation joints designed to seismically separate adjacent ceiling diaphragms.

G. Yoke Assemblies: Manufacturer's standard yoke assemblies used in ceiling framing systems with continuous lighting and diffuser configurations and designed to accommodate seismic forces.

H. Perimeter Moldings: Same metal and finish as grid.
   1. Size: As required for installation conditions and specified Seismic Design Category.

I. Metal Edge Trim for Suspension Systems: Steel or extruded aluminum; provide attachment clips, splice plates, and preformed corner pieces for complete trim system.
   1. Trim Height: As indicated on drawings.
   2. Finish: Baked enamel. Minimum dry film thickness of 1.5 mils, ASTM C635/C635M.
   3. Color: Same as grid.

PART 3 EXECUTION

3.1 EXAMINATION

A. Verify existing conditions before starting work.
B. Verify that layout of hangers will not interfere with other work.
C. Examine acoustical panels before installation. Reject acoustical panels that are wet, moisture damaged, or mold damaged.
D. Proceed with installation only after unsatisfactory conditions have been corrected.

3.2 PREPARATION

A. Install after major above-ceiling work is complete.
B. Coordinate the location of hangers with other work.
C. Layout openings for penetrations centered on the penetrating items.

3.3 INSTALLATION - SUSPENSION SYSTEM

A. Install suspension system in accordance with ASTM C636/C636M, ASTM E580/E580M, and manufacturer's instructions, as supplemented in this section.
B. Rigidly secure system, including integral mechanical and electrical components, for maximum deflection of 1:360.
C. Lay out system to a balanced grid design with edge units no less than 50 percent of acoustical unit size.
D. Perimeter Molding: Install at intersection of ceiling and vertical surfaces and at junctions with other interruptions.
   1. Use longest practical lengths.
   2. Apply acoustical sealant in a continuous ribbon concealed on back of vertical legs of moldings before they are installed.
   3. Screw attach moldings to substrate at intervals not more than 16 inches on center and not more than 3 inches from ends. Miter corners accurately and connect securely.
   4. Do not use exposed fasteners, including pop rivets, on moldings and trim.
E. Seismic Suspension System, Seismic Design Categories D, E, F: Hang suspension system with grid ends attached to the perimeter molding on two adjacent walls; on opposite walls, maintain a 3/4 inch clearance between grid ends and wall.
   1. Install seismic bracing assemblies as indicated on drawings.
F. Where width of ducts and other construction within ceiling plenum produces hanger spacings that interfere with location of hangers at spacings required to support standard suspension-system members, install supplemental suspension members and hangers in form of trapezes or equivalent devices.
G. Do not support components on main runners or cross runners if weight causes total dead load to exceed deflection capability.
H. Do not support ceilings directly from permanent metal forms or floor deck. Fasten hangers to cast-in-place hanger inserts, postinstalled mechanical or power-actuated fasteners that extend through forms into concrete.
I. When steel framing does not permit installation of hanger wires at spacing required, install carrying channels or other supplemental support for attachment of hanger wires.
J. Space hangers not more than 48 inches on center along each member supported directly from hangers unless otherwise indicated; provide hangers not more than 8 inches from ends of each member.
K. Light fixtures, ceiling-mounted air terminals, and other ceiling-mounted equipment: Comply with the stricter requirement of the California Building Code and the manufacturer’s evaluation report.
L. Size supplemental suspension members and hangers to support ceiling loads within performance limits established by referenced standards.
M. Do not eccentrically load system or induce rotation of runners.
N. Install seismic clips, yokes, and other accessories as indicated on drawings, in accordance with manufacturer's evaluation report, and manufacturer's written installation instructions.
O. Form expansion joints as detailed. Form to accommodate plus or minus 1 inch movement. Maintain visual closure.

3.4 INSTALLATION - ACOUSTICAL UNITS

A. Install acoustical units in accordance with manufacturer's instructions.
B. Fit acoustical units in place, free from damaged edges or other defects detrimental to appearance and function.
C. Lay directional patterned units as indicated on drawings.
D. Fit border trim neatly against abutting surfaces.
E. Install acoustical units level, in uniform plane, and free from twist, warp, and dents.
F. Cutting Acoustical Units:
    1. Make field cut edges of same profile as factory edges.
G. For reveal-edged panels on suspension-system runners, install panels with bottom of reveal in firm contact with top surface of runner flanges.
H. For reveal-edged panels on suspension-system members with box-shaped flanges, install panels with reveal surfaces in firm contact with suspension-system surfaces and panel faces flush with bottom face of runners.
I. Paint cut edges of panel remaining exposed after installation; match color of exposed panel surfaces using coating recommended in writing for this purpose by acoustical panel manufacturer.
J. Install hold-down clips on each panel to retain panels tight to grid system; comply with manufacturer's and fire rating requirements.
K. Protect lighting fixtures and air ducts according to requirements indicated for fire-resistance-rated assembly.

3.5 TOLERANCES

A. Maximum Variation from Flat and Level Surface: 1/8 inch in 10 feet.
B. Maximum Variation from Plumb of Grid Members Caused by Eccentric Loads: 2 degrees.

3.6 FIELD QUALITY CONTROL (BY OWNER)

A. Special Inspections: Owner will engage a qualified independent testing and inspecting agency to perform field tests and inspections and prepare test reports.
    1. Verify lateral force bracing for metal suspension ceiling systems for acoustical and lay-in ceilings shall comply with ASTM C635/C635M and California Building Code Section 1617A.1.21 ASCE-7 13.5.6.2
    2. Installation and anchorage will be subject to testing and inspection in accordance with California Building Code Section 1705.13.4 in accordance with Section 13.2.2 ASCE-7 and in accordance with the manufacturer's evaluation report.
    3. Post-installed anchors will be subject to testing and inspecting.
        a. Anchors for hanger wires shall be tested at a frequency of 10 percent. Power-actuated fasteners in concrete shall be field tested for 200 pounds in tension. Test loads for other post-installed anchors shall be tested in accordance with CBC Section 1910A.5.
        b. Anchors for bracing wires shall be tested at a frequency of 50 percent in accordance with CBC Section 1910A.5.
B. Testing agency will report test results promptly and in writing to Contractor and Architect.

3.7 CLEANING

A. Clean exposed surfaces of acoustical panel ceilings, including trim, edge moldings, and suspension-system members. Comply with manufacturer's written instructions for cleaning and touchup of minor finish damage
B. Remove and replace ceiling components that cannot be successfully cleaned and repaired to permanently eliminate evidence of damage.

END OF SECTION

SECTION 096500 - RESILIENT FLOORING, BASE AND ACCESSORIES

PART 1 GENERAL

1.1 SECTION INCLUDES

A. Resilient tile flooring.
B. Resilient base.
C. Installation accessories.

1.2 RELATED REQUIREMENTS

A. Section 016116 - Volatile Organic Compound (VOC) Content Restrictions.

1.3 REFERENCE STANDARDS

A. ASTM F710 - Standard Practice for Preparing Concrete Floors to Receive Resilient Flooring; 2022.
B. ASTM F1700 - Standard Specification for Solid Vinyl Floor in Modular Format such as Tile(s) or Plank(s); 2025.
C. ASTM F1861 - Standard Specification for Resilient Wall Base; 2021 (Reapproved 2025).
D. ASTM F1869 - Standard Test Method for Measuring Moisture Vapor Emission Rate of Concrete Subfloor Using Anhydrous Calcium Chloride; 2023.
E. ASTM F2170 - Standard Test Method for Determining Relative Humidity in Concrete Floor Slabs Using in situ Probes; 2019a.

1.4 SUBMITTALS

A. See Section 013000 - Administrative Requirements for submittal procedures.
B. Product Data: Provide data on specified products, describing physical and performance characteristics; including sizes, patterns and colors available; and installation instructions.
C. Shop Drawings: Indicate seaming plans and floor patterns.
D. Verification Samples: Submit two samples, 4-inch by 4-inch in size illustrating color and pattern for each resilient flooring product specified.
E. Sustainable Design Submittal: Submit VOC content documentation for flooring and adhesives.
F. Manufacturer's Qualification Statement.
G. Installer's Qualification Statement.
H. Maintenance Data: Include maintenance procedures, recommended maintenance materials, and suggested schedule for cleaning, stripping, and re-waxing.
I. Maintenance Materials: Furnish the following for Owner's use in maintenance of project.
    1. See Section 016000 - Product Requirements, for additional provisions.
    2. Extra Flooring Material: 2 percent of amount installed of each type and color.
    3. Extra Wall Base: 2 percent of amount installed of each type and color.

1.5 QUALITY ASSURANCE

A. Manufacturer Qualifications: Company specializing in manufacturing specified flooring with minimum 10 years documented experience.
B. Installer Qualifications: Company specializing in installing specified flooring with minimum 3 years documented experience.
C. Testing Agency Qualifications: Independent firm specializing in performing concrete slab moisture testing and inspections of the type specified in this section.

1.6 DELIVERY, STORAGE, AND HANDLING

A. Upon receipt, immediately remove any shrink-wrap and check materials for damage and the correct style, color, quantity and run numbers.
B. Store all materials off of the floor in an acclimatized, weather-tight space.

C. Maintain temperature in storage area between 55 degrees F and 90 degrees F.
D. Protect roll materials from damage by storing on end.
E. Do not double stack pallets.

1.7 FIELD CONDITIONS

A. Store materials for not less than 48 hours prior to installation in area of installation at a temperature of 70 degrees F to achieve temperature stability. Thereafter, maintain conditions above 55 degrees F.

1.8 WARRANTY

A. Special Warranty for Resilient Flooring: Manufacturer's standard or customized form in which manufacturer and installer agree to repair or replace components of resilient flooring that fail in materials or workmanship within specified warranty period.
   1. Failures include, but are not limited to, defects/blemishes, scratches/cuts, bubbling/ blistering, cracking/crazing/alligatoring, delamination, failure to meet manufacturer's minimum published standards for traffic wear and durability.
      a. Warranty Period: 10 years from date of Substantial Completion.
B. Special Warranty for Moisture/Alkalinity Control System: Manufacturer's standard or customized form in which manufacturer and installer agree to repair or replace flooring materials that fail due to water vapor transmission and/or fail to control alkalinity within specified warranty period.
   1. This warranty includes removing and replacing moisture control system, underlayments, floor covering system, and labor.
   2. Warranty Period: 10 years from date of Substantial Completion.

PART 2 PRODUCTS

2.1 SOURCE LIMITATIONS

A. Obtain resilient tile flooring from single source from single manufacturer. Obtain secondary materials, including moisture/vapor remediation products, leveling and patching compounds, primers, adhesives, and accessories, of type and from manufacturer recommended in writing by resilient flooring manufacturer.

2.2 TILE FLOORING

A. Vinyl Tile
   1. Manufacturers:
      a. Basis of Design as indicated on drawings.
   2. Minimum Requirements: Comply with ASTM F1700, of Class corresponding to type specified.
   3. VOC Content Limits: As specified in Section 016116.
   4. Color: As indicated on drawings.

2.3 RESILIENT BASE

A. Resilient Base: ASTM F1861, Type TS, rubber, vulcanized thermoset; style as scheduled.
   1. Manufacturers:
      a. Basis of Design as indicated on drawings.
   2. Length: Roll. Minimum 50 feet in length.
   3. Color: As indicated on drawings.

2.4 ACCESSORIES

A. Primers, Adhesives, and Seam Sealer: Waterproof; types recommended by flooring manufacturer.
   1. VOC Content Limits: As specified in Section 016116.
B. Moldings, Transition and Edge Strips: Same material as flooring.

PART 3 EXECUTION

3.1 EXAMINATION

A. Verify that surfaces are flat to tolerances acceptable to flooring manufacturer, free of cracks that might telegraph through flooring, clean, dry, and free of curing compounds, surface hardeners, and other chemicals that might interfere with bonding of flooring to substrate.
B. Verify that wall surfaces are smooth and flat within the tolerances specified for that type of work, are dust-free, and are ready to receive resilient base.
C. Cementitious Subfloor Surfaces: Verify that substrates are ready for resilient flooring installation by testing for moisture and alkalinity (pH).
   1. Test as Follows:
      a. Alkalinity (pH): ASTM F710.
      b. Internal Relative Humidity: ASTM F2170.
      c. Moisture Vapor Emission: ASTM F1869.
   2. Obtain instructions if test results are not within limits recommended by resilient flooring manufacturer and adhesive materials manufacturer.

3.2 PREPARATION

A. Clean substrate.

3.3 INSTALLATION - GENERAL

A. Starting installation constitutes acceptance of subfloor conditions.
B. Install in accordance with manufacturer's written instructions.
C. Adhesive-Applied Installation:
   1. Fit joints and butt seams tightly.
   2. Set flooring in place, press with heavy roller to attain full adhesion.

3.4 INSTALLATION - TILE FLOORING

A. Mix tile from container to ensure shade variations are consistent when tile is placed, unless otherwise indicated in manufacturer's installation instructions.

3.5 INSTALLATION - RESILIENT BASE

A. Fit joints tightly and make vertical. Maintain minimum dimension of 36 inches between joints.
B. Field form corners per manufacturer's installation instruction.
   1. Resilient base top edge to fit tightly to wall.
   2. Resilient base toe to fit tightly to flooring.
   3. Split, cracked or 'whiten out' material to be replaced.
   4. Minimum 36 inches for return legs at corners, where wall length permits.
C. Install base on solid backing. Bond tightly to wall and floor surfaces.

3.6 CLEANING

A. Remove excess adhesive from floor, base, and wall surfaces without damage.
B. Clean in accordance with manufacturer's written instructions.

3.7 PROTECTION

A. Prohibit traffic on resilient flooring for 48 hours after installation.

END OF SECTION

SECTION 096700 - FLUID-APPLIED FLOORING

PART 1 GENERAL

1.1 SECTION INCLUDES

A. Fluid-applied flooring and base.

1.2 RELATED REQUIREMENTS

A. Section 035400 - Cast Underlayment.

1.3 REFERENCE STANDARDS

A. ASTM C307 - Standard Test Method for Tensile Strength of Chemical-Resistant Mortar, Grouts, and Monolithic Surfacings; 2023.
B. ASTM C413 - Standard Test Method for Absorption of Chemical-Resistant Mortars, Grouts, Monolithic Surfacings, and Polymer Concretes; 2018.
C. ASTM C531 - Standard Test Method for Linear Shrinkage and Coefficient of Thermal Expansion of Chemical-Resistant Mortars, Grouts, Monolithic Surfacings, and Polymer Concretes; 2018.
D. ASTM C580 - Standard Test Method for Flexural Strength and Modulus of Elasticity of Chemical-Resistant Mortars, Grouts, Monolithic Surfacings, and Polymer Concretes; 2018 (Reapproved 2023).
E. ASTM D1308 - Standard Test Method for Effect of Household Chemicals on Clear and Pigmented Coating Systems; 2020.
F. ASTM F710 - Standard Practice for Preparing Concrete Floors to Receive Resilient Flooring; 2022.
G. ASTM F1869 - Standard Test Method for Measuring Moisture Vapor Emission Rate of Concrete Subfloor Using Anhydrous Calcium Chloride; 2023.
H. ASTM F2170 - Standard Test Method for Determining Relative Humidity in Concrete Floor Slabs Using in situ Probes; 2019a.
I. ASTM G21 - Standard Practice for Determining Resistance of Synthetic Polymeric Materials to Fungi; 2015, with Editorial Revision (2021).

1.4 PRE-INSTALLATION CONFERENCE

A. General contractor shall arrange a meeting not less than 30 days prior to starting work.

1.5 SUBMITTALS

A. See Section 013000 - Administrative Requirements for submittal procedures.
B. Product Data: Provide data on specified products, describing physical and performance characteristics; sizes, patterns and colors available.
C. Samples: Submit two samples, 5 by 5 inch in size illustrating color and pattern for each floor material for each color specified.
D. Concrete Subfloor Test Report: Submit a copy of the moisture and alkalinity (pH) test reports.
E. Manufacturer's Installation Instructions: Indicate special procedures, perimeter conditions requiring special attention, and application rate for each coat.
F. Manufacturer's Qualification Statement.
G. Installer's Qualification Statement. Signed by manufacturer certifying that installers comply with specified requirements.
H. Maintenance Data: Include maintenance procedures, recommended maintenance materials, procedures for stain removal, repairing surface, and suggested schedule for cleaning.

1.6 QUALITY ASSURANCE

A. Manufacturer Qualifications: Company specializing in manufacturing products specified in this section with minimum 10 years documented experience.
B. Applicator Qualifications: Company specializing in performing the work of this section.

1. Minimum 5 years of documented experience.
2. Approved by manufacturer.

C. Supervisor Qualifications: Trained by product manufacturer, under direct full time supervision of manufacturer's own foreman.

D. Verification must be supplied by the Manufacturer that the polyurethane concrete based flooring system has passed, with an Observed Growth Rating of one (1), ASTM G21: Standard Practice for Determining Resistance of Synthetic Polymeric Materials to Fungi. This result will ensure that the polyurethane concrete based flooring system will not support the growth of hazardous fungi.

1.7 MOCK-UPS

A. See Section 014000 - Quality Requirements for additional requirements.

B. Construct mock-up(s) of fluid applied flooring to serve as basis for evaluation of texture and workmanship.
1. Number of Mock-Ups to be Prepared: One.
2. Use same materials and methods for use in the work.
3. Locate where directed.
4. Minimum Size: 48 inches by 48 inches.

C. Obtain approval of mock-up by Architect before proceeding with work.

D. Approved mock-up may remain as part of the work.

1.8 DELIVERY, STORAGE, AND HANDLING

A. Materials shall be delivered to project site in Manufacturer's orginal unopened containers bearing manufacturer's name, product and color.

B. Store resin materials in a dry, secure area.

C. Store materials to prevent deterioration from moisture, heat, cold, direct sunlight, or other detrimental effects. Store material per product data sheet.

D. Store materials for three days prior to installation in area of installation to achieve temperature stability.

1.9 FIELD CONDITIONS

A. Environmental Limitations: Comply with resinous flooring manufacturer's written instructions for substrate temperature, ambient temperature, moisture, ventilation, and other conditions affecting resinous flooring application.

B. Store materials in area of installation for minimum period of 24 hours prior to installation.

C. Lighting: Provide permanent lighting or, if permanent lighting is not in place, simulate permanent lighting conditions during resinous flooring application.

D. Maintain ambient temperature required by manufacturer 72 hours prior to, during, and 24 hours after installation of materials.

E. Close spaces to traffic during resinous flooring application and for not less than 24 hours after application, unless manufacturer recommends a longer period.

1.10 WARRANTY

A. Manufacturer shall furnish a single, written warranty covering both material and workmanship for a period of one full year from date of installation, or provide a joint and several warranty signed on a single document by material manufacturer and applicator jointly and severally warranting the materials and workmanship for a period of one full year from date of installation. A sample warranty letter must be included with bid package or bid may be disqualified.

PART 2 PRODUCTS

2.1 PERFORMANCE REQUIREMENTS

A. The same Manufacturer shall supply all polymer underlayments, wall and floor finishes.

B. Physical Properties: Flooring system shall comply with the following minimum test standards.
1. Tensile Strength: ASTM C638, minimum 3,000 psi

2. Flexural Strength: ASTM C580 , minimum 8,000 psi
3. Coefficient of Thermal Expansion: ASTM C531, minimum $2.2x10^5$ in./in.degrees C.
4. Surface Hardness: ASTM D2240, Shore D, 85-90.

C. Flooring system shall show no chemical attack to the following commonly encountered chemicals:
1. Potassium Hydroxide.
2. Sulfuric Acid, 75 percent.

2.2 FLUID-APPLIED FLOORING SYSTEMS

A. Fluid-Applied Flooring: Epoxy, with aggregate.
1. Aggregate: Silica sand.
2. System Thickness: 25 mils, nominal, dry film thickness (DFT).
3. Texture: Slip resistant.
4. Color: As selected by Architect.
5. Products:
a. Stonhard ; Stonechem 601: www.stonhard.com/#sle.

2.3 ACCESSORIES

A. Subfloor Filler: Type recommended by fluid-applied flooring manufacturer.
B. Crack-Isolation Reinforcing Membrane: Flexible resin formulation that is recommended by resinous flooring manufacturer for substrate and resinous flooring system indicated and that inhibits substrate cracks from reflecting through resinous flooring.
C. Primer: Type recommended by fluid-applied flooring manufacturer.
D. Cove Base: Minimum 4 inches high, 5/8 inch radius.

PART 3 EXECUTION

3.1 EXAMINATION

A. Verify that subfloor surfaces are smooth and flat within the tolerances specified for that type of work and are ready to receive flooring.
B. Verify that wall surfaces are smooth and flat within the tolerances specified for that type of work, are dust-free, and are ready to receive flooring.
C. Verify that subfloor surfaces are dust-free and free of substances that could impair bonding of materials to subfloor surfaces.
D. Cementitious Subfloor Surfaces: Verify that substrates are ready for fluid-applied flooring installation by testing for moisture and alkalinity (pH).
1. Test as Follows:
a. Alkalinity (pH): ASTM F710.
b. Internal Relative Humidity: ASTM F2170.
c. Moisture Vapor Emission: ASTM F1869.
2. Obtain instructions if test results are not within limits recommended by fluid-applied flooring manufacturer.
3. Submit copy of test reports for moisture and alkalinity content of concrete slab, and bond test, stating date of test, person conducting the test, and the area tested.
4. Obtain instructions if test results are not within limits recommended by resilient flooring manufacturer and adhesive materials manufacturer.
5. Follow moisture and alkalinity remediation procedures in Section 035400 - Cast Underlayment.
6. Proceed with installation only after substrates pass testing.

3.2 PREPARATION

A. Remove subfloor ridges and bumps. Fill low spots, cracks, joints, holes, and other defects with polyurethane concrete filler, as recommended by manufacturer.

B. Prepare surfaces by shotblast or similar mechanical method, as recommended by manufacturer.
C. Fill all static (non-moving) cracks or control joints, greater than 28 days old, with polyurethane concrete, as recommended by manufacturer.
D. All control joints less than 28 days old must be re-cut and honored through flooring system, filled with control joint filler.
E. Fill all active (moving) cracks or joints with a firm but flexible (or non-rigid) sealant material, as recommended by Manufacturer. Expansion joints should be re-cut in finished floor and filled with elastomeric joint sealant.
F. Saw cut a groove in the concrete (key in) at all free edges around perimeters, along channels or expansion joints, at doorways and columns, with a depth and width equal to twice the thickness of the flooring system.
G. Apply primer to surfaces required by flooring manufacturer.

3.3 INSTALLATION - ACCESSORIES

A. Install cant strips at base of walls where flooring is to be extended up wall as base.
B. Install terminating cap strip at top of base; attach securely to wall substrate.

3.4 INSTALLATION - FLOORING

A. Apply in accordance with manufacturer's instructions.
B. Apply each coat to minimum thickness required by manufacturer.
C. Finish to smooth level surface.
D. Cove Base: Where specified, install a 4 inches high integral cove base with a nominal 5/8 inch radius onto wall surfaces. All cove bases shall terminate into a 1/4 inch deep by 1/4 inch wide saw-cut into the wall.

3.5 FIELD QUALITY CONTROL

A. See Section 014000 - Quality Requirements, for additional requirements.
B. Manufacturer’s Field Services: Engage manufacturer’s representative for technical assistance and guidance for surface preparation and application of resinous flooring system. Arrange for manufacturer’s representative to observe initial installation (mock-up) of resinous flooring system, at mid-point of the installation, and at completion. Provide additional field observations when requested by Architect or Contractor. After each field visit, submit manufacturer’s written report of observations within 3 business days. The report shall note overall quality of work, deficiencies, and any other concerns, and recommend corrective action.
C. Core Sampling. At the direction of the Owner and at locations designated by the owner, take core sample to verify the thickness of the finished floor system. Repair damage caused by coring and correct deficiencies, if found, at no additional cost to owner.

3.6 PROTECTION

A. Prohibit traffic on floor finish for 48 hours after installation.
B. Barricade area to protect flooring until fully cured.
C. Protect the completed flooring system from water, airborne particles or other surface contaminates until cured and tack free, approximately 12 hours at 70 degrees F after application, or until all other trades on the construction project are completed with their project work.
D. Protect completed system from immersion and chemical exposure until thoroughly cured, approximately 7 days.

END OF SECTION

SECTION 098414 - ACOUSTIC STRETCHED-FABRIC WALL SYSTEMS

PART 1 GENERAL

1.1 SECTION INCLUDES

A. Acoustic stretched-fabric wall system.

1.2 RELATED REQUIREMENTS

A. Section 016116 - Volatile Organic Compound (VOC) Content Restrictions.

1.3 REFERENCE STANDARDS

A. ASTM C423 - Standard Test Method for Sound Absorption and Sound Absorption Coefficients by the Reverberation Room Method; 2023, with Editorial Revision (2024).
B. ASTM E84 - Standard Test Method for Surface Burning Characteristics of Building Materials; 2026.
C. ASTM E795 - Standard Practices for Mounting Test Specimens during Sound Absorption Tests; 2023.
D. ASTM E2573 - Standard Practice for Specimen Preparation and Mounting of Site-Fabricated Stretch Systems to Assess Surface Burning Characteristics; 2024.
E. NFPA 265 - Standard Methods of Fire Tests for Evaluating Room Fire Growth Contribution of Textile or Expanded Vinyl Wall Coverings on Full Height Panels and Walls; 2019.

1.4 SUBMITTALS

A. See Section 013000 - Administrative Requirements, for submittal procedures.
B. Product Data: Manufacturer's data sheets on each product to be used, including:
   1. Preparation instructions and recommendations.
   2. Storage and handling requirements and recommendations.
   3. Installation methods.
   4. Specimen warranty.
C. Shop Drawings: For unit assembly and installation.
   1. Plans, elevations, sections, and mounting devices and details.
   2. Details at panel head, base, joints, and corners. At ceiling, floor base, and wall intersections. Indicate panel edge profile and core materials.
   3. Cutouts and penetrations for other work.
   4. Direction of fabric weave and pattern matching.
   5. Show operation of hinged and sliding components covered by or adjacent to units.
D. Verification Samples:
   1. For each fabric specified, minimum size 36 inch square, representing actual product dye lot in color, texture, and pattern, with all specified treatments applied. Mark top and face of fabric.
      a. Complete repeating pattern.
   2. Actual samples of each frame profile to be used, including transitions between dissimilar profiles.
   3. Acoustic material, minimum size 12 inch square.
   4. Mounting Devices: Full-size sample.
E. Test Reports: Certified test data from an independent test agency verifying that wall systems meet specified requirements for acoustical and fire performance.
F. Manufacturer's Qualification Statement.
G. Installer's Qualification Statement.
H. Warranty Documentation: Submit manufacturer's warranty and ensure that forms have been completed in Owner's name and registered with manufacturer.

1.5 QUALITY ASSURANCE

A. Manufacturer Qualifications: Company specializing in manufacturing products specified in this section, with at least 5 years of documented experience. Factory-authorized service representatives who are available for consultation, periodic project-site observations, and on-site assistance.

B. Installer Qualifications: Company specializing in performing work of the type specified and with at least 3 years of documented experience and licensed and trained by manufacturer.

1.6 DELIVERY, STORAGE, AND HANDLING

A. Protect fabric, acoustical backing, and track from excessive moisture in shipment, storage, and handling.

B. Do not deliver materials to project until wet work such as concrete and plaster has been completed.

C. Store products in manufacturer's unopened packaging until ready for installation.

D. Store and dispose of solvent-based materials, and materials used with solvent-based materials, in accordance with requirements of local authorities having jurisdiction.

1.7 MOCK-UP

A. See Section 014000 - Quality Requirements for additional mock-up requirements.

B. Construct mock-up of acoustic stretched-fabric wall system at location indicated by Architect.

1. Minimum mock-up dimensions; 96 by 96 inches.

2. Approved mock-up may remain as part of the Work.

1.8 DELIVERY, STORAGE, AND HANDLING

A. Comply with fabric and unit manufacturers' written instructions for minimum and maximum temperature and humidity requirements for shipment, storage, and handling.

B. Deliver materials and units in unopened bundles and store in a temperature-controlled dry place with adequate air circulation.

1.9 FIELD CONDITIONS

A. Do not begin installation until interior conditions have reached temperature and humidity that will be maintained during occupancy.

B. Do not install products under environmental conditions outside manufacturer's absolute limits.

C. Lighting: Do not install units until a permanent level of lighting is provided on surfaces to receive the units.

D. Air-Quality Limitations: Protect units from exposure to airborne odors, such as tobacco smoke, and install units under conditions free from odor contamination of ambient air.

E. Field Measurements: Verify unit locations and actual dimensions of openings and penetrations by field measurements before fabrication, and indicate them on Shop Drawings.

1.10 WARRANTY

A. See Section 017800 - Closeout Submittals, for additional warranty requirements.

B. Provide 5 year manufacturer warranty for polymer stretching systems and core material defects.

PART 2 PRODUCTS

2.1 MANUFACTURERS

A. Source Limitations: Obtain wall units specified in this Section from single source from single manufacturer.

B. Acoustic Stretched-Fabric Wall Systems:

1. Acoustical Solutions; AcoustiWall: www.acousticalsolutions.com/#sle.

2.2 ACOUSTIC STRETCHED-FABRIC SYSTEM

A. Acoustic Stretched-Fabric System: Field installed, fabric is stretched and set into framework and laid over acoustic material anchored to substrate. Framework consists of continuous perimeter and intermediate mounting frames anchored to substrate, and designed to permit removal and replacement of fabric within framed areas without affecting adjacent areas.

1. General: Comply with California Building Code; specifically section 803.5.
2. Surface Burning Characteristics: Class A, Flame Spread Index of 25, maximum; Smoke Developed Index of 450, maximum; when whole system is tested in accordance with ASTM E84 using mounting specified in ASTM E2573 for stretched systems.
3. Fire Growth Contribution: Comply with NFPA 265 Method B protocol.
4. Noise Reduction Coefficient (NRC): 0.80, minimum, when tested in accordance with ASTM C423, Type A mounting per ASTM E795.
    a. 1 inch thick, 0.80 NRC.
    b. 2 inch thick, 0.90 NRC.

B. Verify that adhesives and sealants used in installation of acoustic stretched-fabric system have acceptable low VOC emission ratings.
1. Adhesives shall have a maximum VOC content of 50 g/L or less.

2.3 MATERIALS

A. Sound-Absorbing Wall Panel: Manufacturer's standard panel construction consisting of facing material stretched over front face of edge-framed core and bonded or attached to edges and back of frame.
1. Panel Shape and Size: As indicated on drawings.
2. Core and Edge Construction: Manufacturer's standard.
    a. Thickness: As indicated on drawings, 1 inch thickness min.
3. Corner Details, Edge Profile, Reveals between Panels: As indicated on drawings.
4. Facing Material:
    a. Color and pattern: As indicated on drawings.
    b. Fabric from same dye lot; color and pattern
    c. Stain resistant and flame retardant.
5. Mounting Devices: Concealed on back of unit, recommended by manufacturer to support weight of unit, and as follows:
    a. Splines: Manufacturer's standard concealed metal or plastic splines that engage the kerfed edges of the unit, with other moldings and trim for interior corners, exterior corners, and exposed edges, with factory-applied finish on exposed items.
    b. Metal Clips or Bar Hangers: Manufacturer's standard two-part metal "Z" clips,, designed to permit unit removal.

B. Frame: Extruded polymer framing system with serrated jaws of sufficient strength to hold fabric in place after repeated applications.
1. Wall Frame Size: 1/2 inch height from wall substrate with minimum 1 inch wide base.
    a. Wall Frame Shape: Bevel at perimeter with fabric wrapped without seam, and square at intermediate abutting joints.

C. Acoustic Material:
1. Provide type of acoustic material in thickness required to achieve Noise Reduction Coefficient (NRC) indicated on drawings.

D. Adhesives: Low VOC or water-based, and approved by acoustic stretched-fabric system manufacturer.

2.4 FABRICATION

A. Standard Construction: Use manufacturer's standard construction unless otherwise indicated. Rigid edges to reinforce panel perimeter against warpage and damage.

B. Core Face Layer: Evenly stretched over core face and edges. Securely attached to core; free from puckers, ripples, wrinkles, or sags.

C. Facing Material: Apply fabric facing fully covering visible surfaces; Stretched straight, on the grain, tight, square, and free from puckers, ripples, wrinkles, sags, blisters, seams, adhesive, or other visible distortions or foreign matter.
1. Square Corners: Tailor corners.
2. Radius and Other Nonsquare Corners: Attach facing material so there are no seams or gathering of material.
3. Directional or Repeating Patterns and Directional Weave: Mark fabric top and attach fabric in same direction so pattern or weave matches in adjacent units.

D. Dimensional Tolerances of Finished Units: Plus or minus 1/16 inch.

PART 3 EXECUTION

3.1 EXAMINATION

A. Begin installation only after substrates have been properly prepared.
B. Verify that casework, markerboards, door and window jambs, finished ceiling, and other finished items adjacent or abutting the acoustic stretched-fabric system have been properly installed.
C. When preparation of substrate is the responsibility of another installer, notify Architect of unsatisfactory preparation prior to proceeding with this work.
D. Proceed with installation only after unsatisfactory conditions have been corrected.

3.2 PREPARATION

A. Clean surfaces thoroughly prior to installation of this work.
B. Prepare substrate surfaces using methods as recommended by the manufacturer for achieving acceptable result as required for this work.
C. Remove wall plates and other obstacles, and properly prepare substrates to receive frames and acoustic material in accordance with manufacturer's instructions.

3.3 INSTALLATION

A. Install acoustic stretched-fabric system at locations indicated in accordance with approved shop drawings and manufacturer's instructions.
B. Frames: Install perimeter and intermediate frames using appropriate fasteners for prepared substrate, firmly secured to ensure frames do not separate from substrate.
   1. For tile or masonry substrates, apply continuous bead of adhesive along base of framing in addition to spacing of conical anchors and/or fasteners at 6 to 8 inches on center.
   2. Follow contours of wall and scribe to adjoining work at borders, penetrations, and imperfections.
   3. Install framing around openings and penetrations.
   4. At outside corners, miter framing to allow installation of acoustic material and secure placement of fabric around corner without intermediate framework.
   5. Allow for spacing of framework to accommodate insertion of installation tool.
   6. At fixtures mounted within areas of acoustic stretched-fabric system, install rigid blocking for backing and maintain plane of fixture surface flush with face of acoustic stretched-fabric system.
C. Align fabric pattern as indicated on drawings, or if not indicated, with adjacent units.
D. Fabric: Stretch fabric over acoustic material, locking edges of fabric into frame's serrated jaws using manufacturer's recommended tool. Maintain fabric weave plumb, level and true, in proper relation to building lines, without ripples, waviness, hourglass, or other deleterious effects.
   1. Upon fabric installation, do not employ adhesives or mechanical fasteners of any type, and ensure fabric is free-floating and in contact with acoustic material as necessary.
   2. Stapling or gluing of fabric to cores or channel framework is not permitted.
   3. Provide tension in fabric sufficient to prevent sagging under anticipated changes in temperature and humidity.
   4. At outside corners, wrap as single piece of fabric without joints or seams.

3.4 INSTALLATION TOLERANCES

A. Variation from Plumb and Level: Plus or minus 1/16 inch in 48 inches, noncumulative.
B. Variation of Joint Width: Not more than 1/32 inch variation from module line in 48 inches, noncumulative.

3.5 CLEANING

A. Clean exposed surfaces of acoustic stretched-fabric system in compliance with manufacturers instructions for cleaning and repair of minor damage to exposed surfaces.

B. Clip loose threads; remove pills and extraneous materials.

END OF SECTION

SECTION 099000 - PAINTING AND COATING

PART 1 GENERAL

1.1 SECTION INCLUDES

A. Surface preparation.
B. Interior painting and coating systems.
C. Exterior painting and coating systems.
D. Scope:
  1. Finish surfaces exposed to view, unless fully factory-finished and unless otherwise indicated, including the following:
    a. Exterior:
      1) Concrete: Tilt-up, precast, cast-in-place concrete, stucco, EIFS, cementitious siding, Flexboard, Transite, non-roof shingles, and common brick.
      2) Architectural PVC, plastic, and fiberglass.
    b. Interior:
      1) Masonry Concrete Masonry Units: Split face, scored, smooth, high density, low density, and fluted.
      2) Metal: Aluminum and galvanized.
      3) Metal: Structural steel columns, joists, trusses, beams, miscellaneous and ornamental iron, structural iron, and other ferrous metal.
      4) Drywall: Walls, ceilings, gypsum board, and similar items.

1.2 RELATED REQUIREMENTS

A. Section 099600 - High-Performance Coatings: Exterior metal finish.

1.3 REFERENCE STANDARDS

A. MPI - Master Painters Institute; current edition.
B. 40 CFR 59, Subpart D - National Volatile Organic Compound Emission Standards for Architectural Coatings; U.S. Environmental Protection Agency; Current Edition.
C. SCAQMD 1113 - Architectural Coatings; 1977, with Amendment (2016).
D. SSPC-SP 1 - Solvent Cleaning; 2015, with Editorial Revision (2016).
E. SSPC-SP 2 - Hand Tool Cleaning; 2024.
F. SSPC-SP 3 - Power Tool Cleaning; 2024.
G. SSPC-SP 13/NACE No.6 - Surface Preparation of Concrete; 2018.

1.4 SUBMITTALS

A. See Section 013000 - Administrative Requirements for submittal procedures.
B. Product Data: Provide complete list of products to be used, with the following information for each:
  1. Product characteristics.
  2. Surface preparation instructions and recommendations.
  3. Primer requirements and finish specification.
  4. Storage and handling requirements and recommendations.
  5. Application methods.
  6. Clean-up information.
C. Samples: Submit four paper draw down samples, 8-1/2 by 11 inches in size, illustrating range of colors available for each finishing product specified.
D. Certification: By manufacturer that paints and finishes comply with VOC limits specified.
E. Applicator's qualification statement.
F. Maintenance Data: Submit coating maintenance manual including finish schedule showing where each product/color/finish was used, product technical data sheets, safety data sheets (SDS), care and cleaning

instructions, touch-up procedures, repair of painted and finished surfaces, and color samples of each color and finish used.

G. Maintenance Materials: Furnish the following for Owner's use in maintenance of project.
   1. See Section 016000 - Product Requirements for additional provisions.
   2. Extra Paint and Finish Materials: 1 gallon of each color; from the same product run, store where directed.
   3. Label each container with color in addition to manufacturer's label.

1.5 QUALITY ASSURANCE

A. Applicator Qualifications: Company specializing in performing the type of work specified with minimum 3 years experience and approved by manufacturer.

1.6 MOCK-UPS

A. See Section 014000 - Quality Requirements for general requirements for mock-ups.
B. Provide one accent wall as directed by Architect to demonstrate color and finish.
C. Locate where directed by Architect.
D. Mock-up may remain as part of the work.

1.7 DELIVERY, STORAGE, AND HANDLING

A. Deliver products to site in sealed and labeled containers; inspect to verify acceptability.
B. Container Label: Include manufacturer's name, type of paint, product name, product code, color designation, VOC content, batch date, environmental handling, surface preparation, application, and use instructions.
C. Paint Materials: Store at a minimum of 45 degrees F and a maximum of 90 degrees F, in ventilated area, and as required by manufacturer's instructions.
D. Handling: Maintain a clean, dry storage area to prevent contamination or damage to materials.

1.8 FIELD CONDITIONS

A. Do not apply materials when environmental conditions are outside the ranges required by manufacturer.
B. Follow manufacturer's recommended procedures for producing the best results, including testing substrates, moisture in substrates, and humidity and temperature limitations.

PART 2 PRODUCTS

2.1 MANUFACTURERS

A. Basis of Design Products: Subject to compliance with requirements, provide
   1. Sherwin-Williams Company (The) products indicated; www.sherwin-williams.com/#sle.
   2. PPG Industries, Inc.; https://www.ppgpaints.com/#sle.
B. Comparable Products: Products of approved manufacturers will be considered in accordance with 016000 - Product Requirements, and the following:
   1. Manufacturer approve product in writing for application specified.

2.2 PAINTINGS AND COATINGS

A. General:
   1. Provide factory-mixed coatings unless otherwise indicated.
   2. Do not reduce, thin, or dilute coatings or add materials to coatings unless specifically indicated in manufacturer's instructions.
B. Volatile Organic Compound (VOC) Content:
   1. Provide paints and finishes that comply with the most stringent requirements specified in the following:
      a. SCAQMD 1113 Rule.

2. Determination of VOC Content: Testing and calculation in accordance with 40 CFR 59, Subpart D (EPA Method 24), exclusive of colorants added to a tint base and water added at project site, or other method acceptable to authorities having jurisdiction.

C. Accessory Materials: Provide primers, sealers, cleaning agents, cleaning cloths, sanding materials, and clean-up materials as required for final completion of painted surfaces.

2.3 PAINT SYSTEMS - EXTERIOR

A. Concrete: Tilt-up, precast, and cast-in-place concrete, stucco, and EIFS.
1. Latex Systems:
a. Satin Finish:
1) 1st Coat: 5.3 to 8 mils wet, 2.1 to 3.2 mils dry (MPI #3).
(a) Sherwin-Williams Loxon Concrete and Masonry Primer Sealer LX02W50
(b) PPG Paints 4-603XI Perma-Crete
2) 2nd and 3rd Coat: 4 mils wet, 1.5 mils dry per coat (MPI #15).
(a) Sherwin-Williams A-100 Exterior Latex Satin, A82 Series
(b) PPG Paints 739-xx Acri-Shield Max
b. Flat Finish:
1) 1st Coat: 5.3 to 8 mils wet, 2.1 to 3.2 mils dry (MPI #3).
(a) Sherwin-Williams Loxon Concrete and Masonry Primer Sealer LX02W50
(b) PPG Paints 4-603XI Perma-Crete
2) 2nd and 3rd Coat: 4 mils wet, 1.2 mils dry per coat (MPI #10).
(a) Sherwin-Williams A-100 Exterior Latex Flat, A6 Series.
(b) PPG Paints 519-xx Acri-Shield Max.

B. Architectural PVC, plastic, and fiberglass.
1. Latex Systems:
a. Semi-Gloss Finish:
1) 1st Coat: 3.1 mils wet, 0.9 mils dry (MPI #17).
(a) Sherwin-Williams Extreme Bond Bonding Primer, B51W00150.
(b) PPG Paints 17-921XI Seal Grip
2) 2nd and 3rd Coat: 2 to 4 mils dry per coat (MPI #11).
(a) Sherwin-Williams A-100 Exterior Latex Gloss, A8 Series.
(b) PPG Paints V72-610 Break-Through
b. Satin Finish:
1) 1st Coat: 3.1 mils wet, 0.9 mils dry (MPI #17).
(a) Sherwin-Williams Extreme Bond Bonding Primer, B51W00150.
(b) PPG Paints 17-921XI Seal Grip
2) 2nd and 3rd Coat: 4 mils wet, 1.5 mils dry per coat (MPI #15).
(a) Sherwin-Williams A-100 Exterior Latex Satin, A82 Series.
(b) PPG Paints 739-xx Acri-Shield Max

2.4 PAINT SYSTEMS - INTERIOR

A. Masonry CMU: Concrete, split face, scored, smooth, high density, low density, and fluted.
1. Latex Systems:
a. Semi-Gloss Finish:
1) 1st Coat: 75 to 125 sq ft/gal (MPI #4).
(a) Sherwin-Williams PrepRite Block Filler, B25W25.
(b) PPG Paints 6-1 Block Filler.
2) 2nd and 3rd Coat: 4 mils wet, 1.5 mils dry per coat (MPI #43).
(a) Sherwin-Williams ProMar 200 Zero VOC Latex Semi-Gloss, B31-2600 Series.
(b) PPG Paints 649-xx Acri-Shield Max.
b. Eggshell / Satin Finish:
1) 1st Coat: 75 to 125 sq ft/gal (MPI #4).
(a) Sherwin-Williams PrepRite Block Filler, B25W25.
(b) PPG Paints 6-1 Block Filler.
2) 2nd and 3rd Coat: 4 mils wet, 1.7 mils dry per coat (MPI #52).

(a) Sherwin-Williams ProMar 200 Zero VOC Eggshell, B20-2600 Series.
(b) PPG Paints 589-xx Acri-Shield Max.

c. Flat Finish:

1) 1st Coat: 75 to 125 sq ft/gal (MPI #4).
(a) Sherwin-Williams PrepRite Block Filler, B25W25.
(b) PPG Paints 6-1 Block Filler.

2) 2nd and 3rd Coat: 4 mils wet, 1.6 mils dry per coat (MPI #53).
(a) Sherwin-Williams ProMar 200 Zero VOC Latex Flat, B30-2600 Series.
(b) PPG Paints 519-xx Acri-Shield Max.

B. Metal: Aluminum and galvanized.

1. Alkyd Systems, Water-Based:

a. Semi-Gloss Finish:

1) 1st Coat: 5 mils wet, 2 mils dry per coat (MPI #134).
(a) Sherwin-Williams Pro Industrial Pro-Cryl Universal Primer, B66-1310 Series.
(b) PPG Paints 17-921XI Seal Grip

2) 2nd and 3rd Coat: 4 to 5 mils wet, 1.4 to 1.7 mils dry per coat (No MPI Category).
(a) Sherwin-Williams Pro Industrial Water Based Alkyd Urethane Enamel Semi-Gloss, B53-1150 Series.
(b) PPG Paints 6-1510XI Speedhide WB Alkyd.

b. Low Sheen Finish:

1) 1st Coat: 5 mils wet, 2 mils dry per coat (MPI #134).
(a) Sherwin-Williams Pro Industrial Pro-Cryl Universal Primer, B66-1310 Series.
(b) PPG Paints 17-921XI Seal Grip

2) 2nd and 3rd Coat: 4 to 5 mils wet, 1.4 to 1.7 mils dry per coat (No MPI Category).
(a) Sherwin-Williams Pro Industrial Water Based Alkyd Urethane Enamel Low Sheen, B53-1250 Series.
(b) PPG Paints 6-1410XI Speedhide WB Alkyd

C. Metal: Structural steel columns, joists, trusses, beams, miscellaneous and ornamental iron, structural iron, and ferrous metal.

1. Alkyd Systems, Water-Based:

a. Semi-Gloss Finish:

1) 1st Coat: 5 mils wet, 2 mils dry per coat (MPI #107).
(a) Sherwin-Williams Pro Industrial Pro-Cryl Universal Primer, B66-1310 Series.
(b) PPG Paints 4020 Pitt-Tech Plus EP

2) 2nd and 3rd Coat: 4 to 5 mils wet, 1.4 to 1.7 mils dry per coat (No MPI Category).
(a) Sherwin-Williams Pro Industrial Water Based Alkyd Urethane Enamel Semi-Gloss, B53-1150 Series.
(b) PPG Paints 6-1610XI Speedhide WB Alkyd

b. Low Sheen Finish:

1) 1st Coat: 5 mils wet, 2 mils dry per coat (MPI #107).
(a) Sherwin-Williams Pro Industrial Pro-Cryl Universal Primer, B66-1310 Series.
(b) PPG Paints 4020 Pitt-Tech Plus EP

2) 2nd and 3rd Coat: 4 to 5 mils wet, 1.4 to 1.7 mils dry per coat (No MPI Category).
(a) Sherwin-Williams Pro Industrial Water Based Alkyd Urethane Enamel Low Sheen, B53-1250 Series.
(b) PPG Paints 6-1410XI Speedhide WB Alkyd

D. Drywall: Walls, ceilings, gypsum board, and similar items.

1. Latex Systems:

a. Semi-Gloss Finish:

1) 1st Coat: 4 mils wet, 1.5 mils dry per coat (MPI #50).
(a) Sherwin-Williams ProMar 200 Zero VOC Interior Latex Primer, B28W2600.
(b) PPG Paints 9-900 Pure Performance Primer

2) 2nd and 3rd Coat: 4 mils wet, 1.5 mils dry per coat (MPI #43).
(a) Sherwin-Williams ProMar 200 Zero VOC Latex Semi-Gloss, B31-2600 Series.
(b) PPG Paints 9-500XI Pure Performance

b. Eggshell Finish:

1) 1st Coat: 4 mils wet, 1.5 mils dry per coat (MPI #50).
   (a) Sherwin-Williams ProMar 200 Zero VOC Interior Latex Primer, B28W2600.
   (b) PPG Paints 9-900 Pure Performance Primer
2) 2nd and 3rd Coat: 4 mils wet, 1.7 mils dry per coat (MPI #52).
   (a) Sherwin-Williams ProMar 200 Zero VOC Eggshell, B20-2600 Series.
   (b) PPG Paints 9-300XI Pure Performance

c. Flat Finish:
1) 1st Coat: 4 mils wet, 1.5 mils dry per coat (MPI #50).
   (a) Sherwin-Williams ProMar 200 Zero VOC Interior Latex Primer, B28W2600.
   (b) PPG Paints 9-900 Pure Performance Primer
2) 2nd and 3rd Coat: 4 mils wet, 1.6 mils dry per coat (MPI #53).
   (a) Sherwin-Williams ProMar 200 Zero VOC Latex Flat, B30-2600 Series.
   (b) PPG Paints 9-100XI Pure Performance

PART 3 EXECUTION

3.1 EXAMINATION

A. Verify that surfaces are ready to receive work as instructed by the product manufacturer.
B. Examine surfaces scheduled to be finished prior to commencement of work. Report any condition that may potentially effect proper application.
C. Test shop-applied primer for compatibility with subsequent cover materials.

3.2 PREPARATION

A. Clean surfaces thoroughly and correct defects prior to application.
B. Prepare surfaces using the methods recommended by the manufacturer for achieving the best result for the substrate under the project conditions.
C. Concrete:
   1. Remove release agents, curing compounds, efflorescence, and chalk.
   2. Fill bug holes, air pockets, and other voids with cement patching compound.
   3. Prepare concrete in accordance with SSPC-SP 13/NACE No.6.
D. Masonry: Remove efflorescence and chalk.
E. Cementitious Siding: Remove dirt, dust and other foreign matter. Pressure clean, if needed, to remove grease, oil, and loose particles.
F. Gypsum Board: Fill minor defects with filler compound; sand smooth and remove dust prior to painting.
G. Concrete Floors and Traffic Surfaces: Prepare concrete in accordance with SSPC-SP 13/NACE No.6.
H. Aluminum: Remove surface contamination and oil; wash with solvent according to SSPC-SP 1.
I. Galvanized Surfaces:
   1. Confirm that galvanized metal has not been passivated. If this treatment is present, consult with manufacturer on methods to remove this treatment.
   2. Remove surface contamination and oils and wash with solvent according to SSPC-SP 1.
   3. Prepare surface according to SSPC-SP 2.
   4. Apply a test patch of primer, allow to dry for 7 days, then perform an adhesion test per ASTM D3359 Method A to confirm a passing result.
J. Ferrous Metal:
   1. Solvent clean according to SSPC-SP 1.
   2. Shop-Primed Surfaces: Sand and scrape to remove loose primer and rust. Feather edges to make touch-up patches inconspicuous. Prime bare steel surfaces.
   3. Remove rust, loose mill scale, and other foreign substances using methods recommended by paint manufacturer, up to and including blast cleaning according to SSPC-SP 6. Protect from corrosion until coated.

3.3 APPLICATION

A. Remove unfinished louvers, grilles, covers, and access panels on mechanical and electrical components and paint separately.
B. Apply products in accordance with manufacturer's written instructions.
C. Apply coatings at spread rate required to achieve manufacturer's recommended dry film thickness.
D. Regardless of number of coats specified, apply additional coats until complete hide is achieved.

3.4 PRIMING

A. Apply primer to all surfaces unless specifically not required by coating manufacturer. Apply in accordance with coating manufacturer's instructions.
B. Primers specified in painting schedules may be omitted on items that are factory primed or factory finished if acceptable to top coat manufacturers.

3.5 CLEANING

A. Collect waste material that could constitute a fire hazard, place in closed metal containers, and remove daily from site.
B. Clean surfaces immediately of overspray, splatter, and excess material.
C. After coating has cured, clean and replace finish hardware, fixtures, and fittings previously removed.

3.6 PROTECTION

A. Protect finished coatings from damage until completion of project.
B. Touch-up damaged finishes after Substantial Completion.

END OF SECTION

SECTION 099600 - HIGH-PERFORMANCE COATINGS

PART 1 GENERAL

1.1 SECTION INCLUDES

A. High performance coatings - exterior metals.
B. Surface preparation.

1.2 RELATED REQUIREMENTS

A. Section 051200 - Structural Steel Framing.
B. Section 055100 - Metal Stairs.
C. Section 055213 - Pipe and Tube Railings.

1.3 REFERENCE STANDARDS

A. ASTM D610-08 - “Standard Practice for Evaluating Degree of Rusting on Painted Surfaces”
B. 40 CFR 59, Subpart D - National Volatile Organic Compound Emission Standards for Architectural Coatings; U.S. Environmental Protection Agency; Current Edition.
C. ASTM D523 - Standard Test Method for Specular Gloss; 2025.
D. ASTM D610 - Standard Practice for Evaluating Degree of Rusting on Painted Steel Surfaces; 2008 (Reapproved 2019).
E. ASTM D2244 - Standard Practice for Calculation of Color Tolerances and Color Differences from Instrumentally Measured Color Coordinates; 2025.
F. ASTM D4214 - Standard Test Methods for Evaluating the Degree of Chalking of Exterior Paint Films; 2023.
G. CARB (SCM) - Suggested Control Measure for Architectural Coatings; California Air Resources Board; 2020.
H. MPI (APSM) - Master Painters Institute Architectural Painting Specification Manual; Current Edition.
I. SSPC-PA 1 - Shop, Field, and Maintenance Coating of Metals; 2024, with Errata (2025).
J. SSPC-SP 1 - Solvent Cleaning; 2015, with Editorial Revision (2016).
K. SSPC-SP 6/NACE No.3 - Commercial Blast Cleaning; 2006.
L. SSPC-SP 11 - Power-Tool Cleaning to Bare Metal; 2020.

1.4 SUBMITTALS

A. See Section 013000 - Administrative Requirements for submittal procedures.
B. Product Data: Provide complete list of all products to be used, with the following information for each:
   1. Manufacturer's name, product name and/or catalog number, and general product category (e.g. "alkyd enamel").
   2. Cross-reference to specified coating system(s) product is to be used in; include description of each system and color designations.
   3. Manufacturer's installation instructions.
C. Sustainable Design Submittals: Product data for coatings, indicating VOC content.
D. Samples: Submit two samples 8 by 8 inch in size illustrating colors available for selection.
E. Maintenance Materials: Furnish the following from the same product run for Owner's use in maintenance of project.
   1. Extra Coating Materials: 1 gallon of each type and color.
   2. Label each container with manufacturer's name, product number, color number, and room names and numbers where used.

1.5 QUALITY ASSURANCE

A. Manufacturer Qualifications: Company specializing in manufacturing the Products specified in this section with minimum 10 years documented experience of similar applications with successful results, that meet or

exceed performance requirements indicated, and documenting this performance by inclusion of test reports.. Manufacturer shall have factory-authorized service representatives who are available for consultation, periodic Project-site observations, and on-site assistance.

B. Applicator Qualifications: Company specializing in performing the work similar in material, design, and extent to that indicated for this Project and section with minimum 10 years documented experience. Provide work examples that have resulted in installations with a record of successful in-service performance, and that employs installers and supervisors who are trained and approved by manufacturer to perform work of this Section.

1.6 MOCK-UPS

A. See Section 014000 - Quality Requirements for general requirements for mock-ups.
B. Locate where directed by Architect.
C. Final approval of color selections will be based on mock-ups. If preliminary color selections are not approved, apply additional mockups of additional colors selected by Architect at no added cost to Owner.
D. Approval of mock-ups does not constitute approval of deviations from the Contract Documents contained in mockups unless Architect specifically approves such deviations in writing.
E. Approved mock-up may remain as part of the work.

1.7 DELIVERY, STORAGE, AND HANDLING

A. Deliver products to site in sealed and labeled containers; inspect to verify acceptability.
B. Container Label: Include manufacturer's name, type of coating, brand name, lot number, brand code, coverage, surface preparation, drying time, cleanup requirements, color designation, and instructions for mixing and reducing.
C. Coating Materials: Store at minimum ambient temperature of 45 degrees F and a maximum of 90 degrees F, in ventilated area, and as required by manufacturer's instructions.

1.8 FIELD CONDITIONS

A. Follow manufacturer's recommended procedures for producing best results, including testing of substrates, moisture in substrates, and humidity and temperature limitations.
B. Do not apply exterior coatings during rain or snow, or when relative humidity is outside the humidity ranges required by the coating product manufacturer.
C. Maintain this temperature range, 24 hours before, during, and 72 hours after installation of coating.
D. Ventilation: Provide ventilation during coating evaporation stage in confined or enclosed areas in accordance with manufacturer’s instructions.
E. Dust and Contamination: Schedule work to avoid excessive dust and airborne contaminants. Protect work areas from excessive dust and airborne contamination during coating application and curing.
F. Restrict traffic from area where coating is being applied or is curing.

1.9 WARRANTY

A. See Section 017800 - Closeout Submittals for additional warranty requirements.
B. Special Product Warranty: Manufacture’s special warranty for the Fluoronar coating system in which manufacturer agrees to replace high-performance coating that does not comply with requirements or that fails within specified warranty period.
   1. Failures includes checking, cracking, blistering, or delamination from the substrate.
   2. Allow the substrate to corrode in excess of 1% of the surface area being coated as measured in accordance with ASTM D610 Standard Practice for Evaluating Degree of Rusting on Painted Surfaces for a period of five (5) years from the date of Substantial Completion, or corrode in excess of an additional 0.5% per year for the remaining 5 years of the warranty coverage period (3.5% maximum allowable corrosion at 10 years).
   3. Change color more than 5 DE Hunter units as determined in accordance with ASTM D2244 by comparing the affected exposed coating cleaned with water and a soft cloth with unexposed Original Project Color Standards (see Item 3.8 below) maintained by Tnemec and the Owner. Exhibit loss of gloss in excess of 24 units as measured by a gloss meter in accordance with ASTM D523 with 60 degree geometry. Chalk in excess of a rating of 8 as measured in accordance with ASTM D4214, Method A.

4. Manufacturer shall supply sufficient material to repair areas or replace high-performance coatings that fail within specified warranty period.
5. Warranty Period: 15 years beginning on the substantial completion date.

C. Standard Product Warranty: Manufacture's standard warranty for all high performance coating systems except Fluoronar in which manufacturer agrees to replace high-performance coating system that does not comply with requirements or that fails within specified warranty period.
1. Failures includes checking, cracking, blistering, or delamination from the substrate.
2. Allow the substrate to corrode in excess of 1% of the surface area being coated as measured in accordance with ASTM D610 Standard Practice for Evaluating Degree of Rusting on Painted Surfaces for a period of five (5) years from the date of Substantial Completion, or corrode in excess of an additional 0.5% per year for the remaining 5 years of the warranty coverage period (3.5% maximum allowable corrosion at 10 years).
3. Manufacturer shall supply sufficient material to repair areas or replace high-performance coatings that fail within specified warranty period.
4. Warranty Period: 10 years from date of Substantial Completion.

D. Installers Warranty: Installer agrees to repair or replace high performance coating system that does not comply with requirements or that fails within specified warranty period.
1. Failures includes checking, cracking, blistering, corrosion or delamination from the substrate.
2. Warranty Period: Four years from date of Substantial Completion.

PART 2 PRODUCTS

2.1 MANUFACTURERS

A. Provide high performance coating products from the same manufacturer.
1. Products shall be recommended in writing by topcoat manufacturers for use in each paint system and on substrate indicated.

2.2 HIGH PERFORMANCE COATING SYSTEMS

A. Coatings - General: Provide complete multi-coat systems formulated and recommended by manufacturer for the applications indicated, in the thicknesses indicated; number of coats specified does not include primer or filler coat.
1. Volatile Organic Compound (VOC) Content:
a. Provide coatings that comply with the most stringent requirements specified in the following:
1) 40 CFR 59, Subpart D--National Volatile Organic Compound Emission Standards for Architectural Coatings.
2) CARB (SCM).
3) Ozone Transport Commission (OTC) Model Rule, Architectural, Industrial, and Maintenance Coatings: www.otcair.org.
(a) Opaque, Flat: 50 g/L, maximum.
(b) Opaque, Nonflat: 100 g/L, maximum.
(c) Opaque, High Gloss: 150 g/L, maximum.
(d) Anticorrosive and Antirust Paints Applied to Ferrous Metals: 250 g/L, maximum.
(e) Zinc-Rich Industrial Maintenance Primers: 340 g/L, maximum.
4) Architectural coatings VOC limits of the State in which the Project is located.
b. Determination of VOC Content: Testing and calculation in accordance with 40 CFR 59, Subpart D (EPA Method 24), exclusive of colorants added to a tint base and water added at project site; or other method acceptable to authorities having jurisdiction.
2. Colors: As indicated on drawings.

B. Fluoropolymer / Epoxy / Zinc Coating System:
1. Number of Coats: Two.
2. Product Characteristics:
a. Comply with the performance requirements specified above for moderate exposure.
3. Top Coat(s): Air Dry Fluoropolymer, Two Component.

a. Sheen: Satin.
b. Products: Basis-of-design
1) Tnemec Company, Inc; Series 1072V Fluoronar: www.tnemec.com/#sle.
c. Dry Film Thickness: 2.0 - 3.0 mils.
4. Intermidate Coat: Polyamidoamine Epoxy
a. Product: Basis-of-design
1) Tnemec Company, Inc: Series L69 Epoxoline II: www.tnemec.com/#sle.
b. Dry Film Thickness: 2.0 - 5.0 mils.
5. Primer: Shop Primer and Field Touch-up.
a. Product: Basis-of-design
1) Shop - Tnemec Company, Inc: Series 90-97 Tneme-Zinc: www.tnemec.com/#sle.
2) Field Touch-Up - Tnemec Company, Inc: Series 94-H20 Hydro-Zinc: www.tnemec.com/#sle.
b. Dry Film Thickness: 2.5 - 3.5 mils.

C. Shellac: Pure, white type.

2.3 SOURCE QUALITY CONTROL

A. Testing of Coating Materials: Owner reserves the right to invoke the following procedure:
1. Owner may engage the services of a qualified testing agency to sample coating materials. Contractor will be notified in advance and may be present when samples are taken. If coating materials have already been delivered to project site, samples may be taken at project site. Samples will be identified, sealed, and certified by testing agency.
2. Testing agency will perform tests for compliance with product requirements.
3. Owner may direct Contractor to stop applying coatings if test results show materials being used do not comply with product requirements. Contractor shall remove noncomplying coating materials from project site, pay for testing, and recoat surfaces coated with rejected materials. Contractor will be required to remove rejected materials from previously coated surfaces if, on recoating with complying materials, the two coatings are incompatible.

PART 3 EXECUTION

3.1 EXAMINATION

A. Do not begin application of coatings until substrates have been properly prepared.
B. Verify that substrate surfaces are ready to receive work as instructed by the coating manufacturer. Obtain and follow manufacturer's instructions for examination and testing of substrates.
C. Examine surfaces scheduled to be finished prior to commencement of work. Report any condition that may potentially affect proper application.
D. Examine substrates and conditions, with manufacturer’s technical representative and Applicator present, for compliance with requirements for maximum moisture content and other conditions affecting performance of the Work.
E. Proceed with coating application only after unacceptable conditions have been corrected.
1. Commencing coating application constitutes Contractor's acceptance of substrates and conditions.

3.2 PREPARATION

A. Comply with manufacturer's written instructions and recommendations applicable to substrates and coating systems indicated.
B. Clean surfaces of loose foreign matter.
C. Remove substances that would bleed through finished coatings. If unremovable, seal surface with shellac.
1. Remove incompatible primers and reprime substrate with compatible primers or apply tie coat as required to produce coating systems indicated.
D. Remove finish hardware, fixture covers, and accessories and store.
1. If removal is impractical or impossible because of size or weight of item, provide surface-applied protection before surface preparation and painting.

2. Use workers skilled in the trades involved to reinstall items that were removed. Remove surface-applied protection.

E. Ferrous Metal:

1. Solvent clean according to SSPC-SP 1.
2. Shop-Primed Surfaces: Sand and scrape to remove loose primer and rust. Feather edges to make touch-up patches inconspicuous. Clean surfaces with solvent. Prime bare steel surfaces.
3. Remove rust, loose mill scale, and other foreign substances using methods recommended in writing by paint manufacturer and blast cleaning in accordance with SSPC-SP 6/NACE No.3, and protect from corrosion until coated.

F. Surface preparation for field touch-up of ferrous metals shop-primed:

1. Organic Zinc-Rich Primer - Remove all contaminants including oil, grease, zinc oxides, dirt, dust and foreign matter from the surface. Weld slag, weld spatter, rough edges and sharp corners of weld seams shall be ground smooth. All rusted, abraded and unpainted areas shall be blast cleaned to a Commercial Blast as outlined in SSPC-SP 6 or SSPC-SP 11 Power tool cleaning to bare steel and provide a minimum 1 mil surface profile. Paint exposed areas with the same material as used for shop priming to comply with SSPC-PA 1 for touching up shop-primed surfaces.

3.3 PRIMING

A. Apply primer to all surfaces, unless specifically not required by coating manufacturer. Apply in accordance with coating manufacturer's instructions.

3.4 COATING APPLICATION

A. Apply coatings in accordance with manufacturer's written instructions, to thicknesses specified and recommendations in MPI - Architectural Painting and Specification Manual.

1. Use applicators and techniques suited for coating and substrate indicated.
2. Coat surfaces behind movable equipment and furniture same as similar exposed surfaces. Before final installation, coat surfaces behind permanently fixed equipment or furniture with prime coat only.
3. Coat backsides of access panels, removable or hinged covers, and similar hinged items to match exposed surfaces.
4. Do not apply coatings over labels of independent testing agencies or equipment name, identification, performance rating, or nomenclature plates.

B. Apply in uniform thickness coats, without runs, drips, pinholes, brush marks, or variations in color, texture, or finish. Finish edges, crevices, corners, and other changes in dimension with full coating thickness.

C. Tint each undercoat a lighter shade to facilitate identification of each coat if multiple coats of the same material are to be applied. Tint undercoats to match color of finish coat, but provide sufficient difference in shade of undercoats to distinguish each separate coat.

D. If undercoats or other conditions show through final coat, apply additional coats until cured film has a uniform coating finish, color, and appearance.

3.5 FIELD QUALITY CONTROL

A. See Section 014000 - Quality Requirements for general requirements for field inspection.

B. Dry Film Thickness Testing: Owner will engage the services of a qualified testing and inspecting agency to inspect and test coatings for dry film thickness.

1. Contractor shall touch up and restore coated surfaces damaged by testing.
2. If test results show that dry film thickness of applied coating does not comply with coating manufacturer's written recommendations, and specified thickness, Contractor shall pay for retesting and apply additional coats as needed to provide dry film thickness that complies with coating manufacturer's written recommendations, and specified thickness.

3.6 CLEANING

A. Collect waste material that could constitute a fire hazard, place in closed metal containers, and remove daily from site.

B. Clean surfaces immediately of overspray, splatter, and excess material.

C. After coating has cured, clean and replace finish hardware, fixtures, and fittings previously removed.

3.7 PROTECTION

A. Protect finished work from damage. Touch up and restore damaged or defaced coated surfaces.

B. Protect work of other trades against damage from coating operation. Correct damage to work of other trades by cleaning, repairing, replacing, and recoating, as approved by Architect, and leave in an undamaged condition.

END OF SECTION

SECTION 101419 - DIMENSIONAL LETTER SIGNAGE

PART 1 GENERAL

1.1 SECTION INCLUDES

A. Fabricated Channel Dimensional Characters

1.2 RELATED REQUIREMENTS

A. Section 101423 - Panel Signage for panel signage, and for source limitations between panel signage and dimensional letter signage provided under this Section.

1.3 REFERENCE STANDARDS

A. 36 CFR 1191 - Americans with Disabilities Act (ADA) Accessibility Guidelines for Buildings and Facilities; Architectural Barriers Act (ABA) Accessibility Guidelines; current edition.
B. AAMA 2603 - Voluntary Specification, Performance Requirements and Test Procedures for Pigmented Organic Coatings on Aluminum Extrusions and Panels (with Coil Coating Appendix); 2022.
C. ADA Standards - 2010 ADA Standards for Accessible Design; 2010.
D. ASTM B209/B209M - Standard Specification for Aluminum and Aluminum-Alloy Sheet and Plate; 2021a.
E. ASTM B221 - Standard Specification for Aluminum and Aluminum-Alloy Extruded Bars, Rods, Wire, Profiles, and Tubes; 2021.
F. ASTM D1187/D1187M - Standard Specification for Asphalt-Base Emulsions for Use as Protective Coatings for Metal; 1997 (Reapproved 2024).
G. ICC A117.1 - Accessible and Usable Buildings and Facilities; 2017.

1.4 COORDINATION

A. Furnish templates for placement of sign-anchorage devices embedded in permanent construction by other installers.

1.5 SUBMITTALS

A. See Section 013000 - Administrative Requirements for submittal procedures.
B. Product Data: Manufacturer's product literature for each type of dimensional letter sign, indicating style, font, colors, locations, and overall dimensions of each sign.
C. Shop Drawings:
   1. Include dimensions, locations, elevations, materials, text and graphic layout, and attachment details.
D. Sign Schedule: Use same designations as indicated on drawings.
E. Samples: Submit one sample of each type of dimensional letter sign of size similar to that required for project, indicating sign style, font, and method of attachment.
F. Selection Samples: Where materials, colors, and finishes are not specified, submit two sets of selection charts or chips.
G. Submit for approval by Owner through Architect prior to fabrication.
H. Manufacturer's Installation Instructions: Include installation templates and attachment devices.
I. Manufacturer's and Installer's qualification statement.
J. Maintenance Materials: Furnish the following for Owner's use in maintenance of project.

1.6 QUALITY ASSURANCE

A. Manufacturer Qualifications: Company specializing in manufacturing the products specified in this section with minimum 10 years of documented experience.
B. Installer Qualifications: An experienced entity with minimum 10 years of documented experience that employs installers and supervisors who are trained and approved by manufacturer.

1.7 DELIVERY, STORAGE, AND HANDLING

A. Package dimensional letter signs as required to prevent damage before installation.
B. Store under cover and elevated above grade.
C. Store tape adhesive at a normal room temperature of 68 to 72 degrees F.

1.8 FIELD CONDITIONS

A. Do not install tape adhesive when ambient temperature is lower than recommended by manufacturer.
B. Maintain minimum ambient temperature during and after installation.
C. Field Measurements: Verify locations of dimensional letter signage by field measurements before fabrication and indicate measurements on Shop Drawings.

1.9 WARRANTY

A. Special Warranty: Manufacturer agrees to repair or replace components of signs that fail in materials or workmanship within specified warranty period.
   1. Failures include, but are not limited to, the following:
      a. Deterioration of finishes beyond normal weathering.
      b. Separation or delamination of sheet materials and components.
   2. Warranty Period: 5 years from date of Substantial Completion.

PART 2 PRODUCTS

2.1 MANUFACTURERS

A. Basis of Design Dimensional Letter Signage: Subject to compliance with requirements, provide dimensional letter signage by the following:
   1. As indicated on drawings, or if not indicated, by the following:
   2. Owner's existing or current signage vendor.
B. Source Limitations: Obtain dimensional letter signage as specified herein, and room-identification panel signage as specified in Section 101423 - Panel Signage from single source from single manufacturer.

2.2 REGULATORY REQUIREMENTS

A. Accessibility Requirements: Comply with ADA Standards and ICC A117.1 and applicable building codes, unless otherwise indicated; in the event of conflicting requirements, comply with the most restrictive requirements.

2.3 PERFORMANCE REQUIREMENTS

A. Structural Performance: Signs and supporting elements shall withstand the effects of gravity and other loads within limits and under conditions indicated.
   1. Uniform Wind Load: Per the California Building Code based on wind speed indicated on structural drawings.
   2. Other Design Loads: As indicated on structural drawings.
B. Thermal Movements: For exterior fabricated channel dimensional characters, allow for thermal movements from ambient and surface temperature changes.
   1. Temperature Change: 120 degrees F, ambient; 180 degrees F, material surfaces.

2.4 DIMENSIONAL CHARACTERS

A. Fabricated Channel Characters: Metal face and side returns, formed free from warp and distortion; with uniform faces, sharp corners, and precisely formed lines and profiles; internally braced for stability, to meet structural performance loading without oil-canning or other surface deformation, and for securing fasteners; and as follows.
   1. Character Material: Sheet or plate aluminum.

2. Material Thickness: Manufacturer's standard for size and design of character.
3. Character Height: As indicated on drawings.
4. Character Depth: As indicated on drawings.
5. Finishes:
    a. Baked-Enamel or Powder-Coat Finish: Manufacturer's standard, in color as indicated on drawings, or if not indicated, custom color to match Architect's sample.
    b. Overcoat: Manufacturer's standard baked-on clear coating.
6. Mounting: Manufacturer's standard for size and design of character.
    a. Hold characters at manufacturer's recommended distance from wall surface.
7. Typeface: As indicated on drawings.

B. Materials
1. Aluminum Sheet and Plate: ASTM B209/B209M, alloy and temper recommended by aluminum producer and finisher for type of use and finish indicated.
2. Aluminum Extrusions: ASTM B221, alloy and temper recommended by aluminum producer and finisher for type of use and finish indicated.

C. Applications: Building identification.
1. Use individual metal letters.
2. Mounting Location: Exterior as indicated on drawings.

D. Metal Letters:
1. Material: Aluminum casting.
2. Thickness: As indicated on drawings, minimum 1/2 inch.
3. Letter Height: As indicated on drawings, minimum 12 inches.
4. Text and Typeface:
    a. Character Font: Helvetica, Arial, or other sans serif font.
5. Finish: As selected by Architect from manufacturer's full range.
6. Color: As selected.
7. Mounting: As indicated on drawings.

2.5 ACCESSORIES

A. Fasteners and Anchors: Manufacturer's standard as required for secure anchorage of signs, noncorrosive and compatible with each material joined, and complying with the following:
1. Use concealed fasteners and anchors unless indicated to be exposed.
2. For exterior exposure, use non-corrosive materials.
3. Sign Mounting Fasteners:
    a. Concealed Studs: Concealed (blind), threaded studs welded to back of sign material, screwed into back of sign assembly, or screwed into tapped lugs cast integrally into back of cast sign material, unless otherwise indicated.
    b. Projecting Studs: Threaded studs with sleeve spacer, welded to back of sign material, screwed into back of sign assembly, or screwed into tapped lugs cast integrally into back of cast sign material, unless otherwise indicated.

B. Bituminous Paint: Cold-applied asphalt emulsion complying with ASTM D1187/D1187M.

2.6 FABRICATION

A. General: Provide manufacturer's standard sign assemblies according to requirements indicated.
1. Preassemble signs and assemblies in the shop to greatest extent possible. Disassemble signs and assemblies only as necessary for shipping and handling limitations. Clearly mark units for reassembly and installation; apply markings in locations concealed from view after final assembly.
2. Mill joints to a tight, hairline fit. Form assemblies and joints exposed to weather to resist water penetration and retention.
3. Comply with AWS for recommended practices in welding. Provide welds behind finished surfaces without distorting or discoloring exposed side. Clean exposed welded connections of flux, and dress exposed and contact surfaces.
4. Conceal connections if possible; otherwise, locate connections where they are inconspicuous.

5. Internally brace dimensional characters for stability, to meet structural performance loading without oil-canning or other surface deformation, and for securing fasteners.
6. Provide rabbets, lugs, and tabs necessary to assemble components and to attach to work. Drill and tap for required fasteners. Use concealed fasteners where possible; use exposed fasteners that match sign finish.

2.7 GENERAL FINISH REQUIREMENTS

A. Protect mechanical finishes on exposed surfaces from damage by applying a strippable, temporary protective covering before shipping.
B. Appearance of Finished Work: Noticeable variations in same piece are not acceptable. Variations in appearance of adjoining components are acceptable if they are within the range of approved Samples and are assembled or installed to minimize contrast.

2.8 ALUMINUM FINISHES

A. Baked-Enamel or Powder-Coat Finish: AAMA 2603 except with a minimum dry film thickness of 1.5 mils. Comply with coating manufacturer's written instructions for cleaning, conversion coating, and applying and baking finish.

PART 3 EXECUTION

3.1 EXAMINATION

A. Verify that substrate surfaces are ready to receive work.
B. Verify that sign-support surfaces are within tolerances to accommodate signs without gaps or irregularities between backs of signs and support surfaces unless otherwise indicated.
C. Notify Architect if conditions are not suitable for installation of signs; do not proceed until conditions are satisfactory.
D. Proceed with installation only after unsatisfactory conditions have been corrected.

3.2 INSTALLATION

A. Install in accordance with manufacturer's instructions.
   1. Install signs level, plumb, true to line, and at locations and heights indicated, with sign surfaces free of distortion and other defects in appearance.
   2. Before installation, verify that sign surfaces are clean and free of materials or debris that would impair installation.
   3. Corrosion Protection: Coat concealed surfaces of exterior aluminum in contact with grout, concrete, masonry, wood, or dissimilar metals, with a heavy coat of bituminous paint.
B. Locate dimensional letter signs and mount at heights indicated on drawings and in accordance with ADA Standards and ICC A117.1.
C. Mounting Methods: Manufacturer's recommended mounting method, complying with specified performance requirements, and the following as applicable:
   1. Concealed Studs: Using a template, drill holes in substrate aligning with studs on back of sign. Remove loose debris from hole and substrate surface.
      a. Place sign in position and flush to surface, install washers and nuts on studs projecting through opposite side of surface, and tighten.
   2. Projecting Studs: Using a template, drill holes in substrate aligning with studs on back of sign. Remove loose debris from hole and substrate surface.
      a. Place spacers on studs, place sign in position with spacers pinched between sign and substrate, and install washers and nuts on stud ends projecting through opposite side of surface, and tighten.

3.3 ADJUSTING, CLEANING, AND PROTECTION

A. Remove and replace damaged or deformed characters and signs that do not comply with specified requirements. Replace characters with damaged or deteriorated finishes or components that cannot be successfully repaired by finish touchup or similar minor repair procedures.

B. Remove temporary protective coverings and strippable films as signs are installed.

C. On completion of installation, clean exposed surfaces of signs according to manufacturer's written instructions, and touch up minor nicks and abrasions in finish. Maintain signs in a clean condition during construction and protect from damage until acceptance by Owner.

D. See Section 017000 - Execution and Closeout Requirements for additional requirements.

END OF SECTION

SECTION 101423 - PANEL SIGNAGE

PART 1 GENERAL

1.1 SECTION INCLUDES

A. Room-identification signs attached directly to the building.

1.2 REFERENCE STANDARDS

A. AAMA 611 - Specification for Anodized Architectural Aluminum; 2026.
B. ADA Standards - 2010 ADA Standards for Accessible Design; 2010.
C. ASTM B209/B209M - Standard Specification for Aluminum and Aluminum-Alloy Sheet and Plate; 2021a.
D. ASTM B221 - Standard Specification for Aluminum and Aluminum-Alloy Extruded Bars, Rods, Wire, Profiles, and Tubes; 2021.
E. ASTM D4802 - Standard Specification for Poly(Methyl Methacrylate) Acrylic Plastic Sheet; 2016.
F. ICC A117.1 - Accessible and Usable Buildings and Facilities; 2017.

1.3 COORDINATION

A. Furnish templates for placement of sign-anchorage devices embedded in permanent construction by other installers.

1.4 SUBMITTALS

A. See Section 013000 - Administrative Requirements for submittal procedures.
B. Product Data: Manufacturer's product literature for each type of panel sign, indicating styles, font, foreground and background colors, locations, and overall dimensions of each sign.
C. Shop Drawings:
   1. Include dimensions, locations, elevations, materials, text and graphic layout, attachment details, and schedules.
   2. Schedule: Provide information sufficient to completely define each panel sign for fabrication, including room number, room name, other text and Braille to be applied, sign and letter sizes, fonts, and colors.
      a. For room-identification signs. Use same designations indicated on drawings or specified.
      b. When content of signs is indicated to be determined later, request such information from Owner through Architect at least 2 months prior to start of fabrication; upon request, submit preliminary schedule.
      c. Submit for approval by Owner through Architect prior to fabrication.
D. Samples: Submit two samples of each type of sign, of size similar to that required for project, indicating sign style, font, and method of attachment.
E. Selection Samples: Where colors, materials, and finishes are not specified, submit two sets of color selection charts or chips.
F. Manufacturer's Installation Instructions: Include installation templates and attachment devices.
G. Manufacturer's and Installer's qualification statement.
H. Maintenance Materials: Furnish the following for Owner's use in maintenance of project.

1.5 QUALITY ASSURANCE

A. Manufacturer Qualifications: Company specializing in manufacturing the products specified in this section with minimum 3 years of documented experience.
B. Installer Qualifications: An experienced entity that employs installers and supervisors who are trained and approved by manufacturer.

1.6 DELIVERY, STORAGE, AND HANDLING

A. Package signs as required to prevent damage before installation.

B. Store tape adhesive at normal room temperature.

1.7 FIELD CONDITIONS

A. Do not install tape adhesive when ambient temperature is lower than recommended by manufacturer.
B. Maintain minimum ambient temperature during and after installation.
C. Field Measurements: Verify locations of anchorage devices embedded in permanent construction by other installers by field measurements before fabrication, and indicate measurements on Shop Drawings.

1.8 WARRANTY

A. Special Warranty: Manufacturer agrees to repair or replace components of signs that fail in materials or workmanship within specified warranty period.
   1. Failures include, but are not limited to, the following:
      a. Deterioration of finishes beyond normal weathering.
      b. Deterioration of embedded graphic image.
      c. Separation or delamination of sheet materials and components.
   2. Warranty Period: 5 years from date of Substantial Completion.

PART 2 PRODUCTS

2.1 MANUFACTURERS

A. Basis-of-Design Manufacturer: Subject to compliance with requirements, provide room identification panel signage.
   1. As indicated on drawings.
   2. Or if not indicated, Owner's existing or current signage vendor.
B. Source Limitations: Obtain room-identification panel signage, and dimensional letter signage as specified in Section 101419 - Dimensional Letter Signage from single source from single manufacturer.

2.2 REGULATORY REQUIREMENTS

A. Accessibility Requirements: Comply with ADA Standards and ICC A117.1 and applicable building codes, unless otherwise indicated; in the event of conflicting requirements, comply with the most restrictive requirements.

2.3 ROOM-IDENTIFICATION SIGNS

A. Room-Identification Sign: Sign system with smooth, uniform surfaces; with message and characters having uniform faces, sharp corners, and precisely formed lines and profiles; and as follows:
   1. Basis-of-Design Manufacturer: Subject to compliance with requirements, provide room identification panel signage by the following:
      a. As indicated on drawings, or if not indicated, by the following:
      b. Owner's existing or current signage vendor.
   2. Laminated-Sheet Sign: Photopolymer face sheet with raised graphics laminated over subsurface graphics to acrylic backing sheet to produce composite sheet.
      a. Composite-Sheet Thickness: Manufacturer's standard for size of sign.
      b. Finish: Matte (non glare).
      c. Background: Colors and pattern as indicated.
      d. Tactile lettering and graphics: Colors and content as indicated on drawings.
      e. Panel size: As indicated.
   3. Sign-Panel Perimeter: Finish edges smooth.
      a. Edge Condition: As indicated on drawings.
      b. Corner Condition in Elevation: As indicated on drawings.
   4. Frame: Entire perimeter as indicated.
      a. Material: Aluminum.

b. Material Thickness: Manufacturer's standard for sign type indicated.
c. Frame Depth: Manufacturer's standard for sign type indicated.
d. Profile: Square.
e. Corner Condition in Elevation: As indicated on drawings.
f. Finish and Color: As indicated on drawings.

5. Mounting: Manufacturer's standard method for substrates indicated, with concealed mechanical anchors typical, except two-face tape on glass substrates.
6. Text and Typeface: Accessible raised characters and Braille, as required per accessibility standard and as indicated on drawings.

2.4 SIGN MATERIALS

A. Aluminum Sheet and Plate: ASTM B209/B209M, alloy and temper recommended by aluminum producer and finisher for type of use and finish indicated.
B. Aluminum Extrusions: ASTM B221, alloy and temper recommended by aluminum producer and finisher for type of use and finish indicated.
C. Acrylic Sheet: ASTM D4802, category as standard with manufacturer for each sign, Type UVF (UV filtering).
D. Paints and Coatings for Sheet Materials: Inks, dyes, and paints that are recommended by manufacturer for optimum adherence to surface and are UV and water resistant for colors and exposure indicated.

2.5 ACCESSORIES

A. Fasteners and Anchors: Manufacturer's standard as required for secure anchorage of signs, noncorrosive and compatible with each material joined, and complying with the following:
1. Use concealed fasteners and anchors unless indicated to be exposed.
2. For exterior exposure, furnish stainless-steel devices unless otherwise indicated.

B. Tape Adhesive: Glass substrates only. Double-sided tape, Manufacturer's standard high-bond, foam-core tape, 0.045 inch thick.

2.6 FABRICATION

A. General: Provide manufacturer's standard sign assemblies according to requirements indicated.
1. Preassemble signs and assemblies in the shop to greatest extent possible. Disassemble signs and assemblies only as necessary for shipping and handling limitations. Clearly mark units for reassembly and installation; apply markings in locations concealed from view after final assembly.
2. Mill joints to a tight, hairline fit. Form assemblies and joints exposed to weather to resist water penetration and retention.
3. Conceal connections if possible; otherwise, locate connections where they are inconspicuous.
4. Provide rabbets, lugs, and tabs necessary to assemble components and to attach to existing work. Drill and tap for required fasteners. Use concealed fasteners where possible; use exposed fasteners that match sign finish.

2.7 GENERAL FINISH REQUIREMENTS

A. Protect mechanical finishes on exposed surfaces from damage by applying a strippable, temporary protective covering before shipping.
B. Appearance of Finished Work: Noticeable variations in same piece are not acceptable. Variations in appearance of adjoining components are acceptable if they are within the range of approved Samples and are assembled or installed to minimize contrast.

2.8 ALUMINUM FINISHES

A. Color Anodic Finish: AAMA 611, Class I, 0.018 mm or thicker.

PART 3 EXECUTION

3.1 EXAMINATION

A. Verify that substrate surfaces are ready to receive work.

B. Verify that sign-support surfaces are within tolerances to accommodate signs without gaps or irregularities between backs of signs and support surfaces unless otherwise indicated.

C. Verify that anchorage devices embedded in permanent construction are correctly sized and located to accommodate signs.

D. Notify Architect if conditions are not suitable for installation of signs; do not proceed until conditions are satisfactory.

3.2 INSTALLATION

A. Install in accordance with manufacturer's instructions.

1. Install signs level, plumb, true to line, and at locations and heights indicated, with sign surfaces free of distortion and other defects in appearance.
2. Install signs so they do not protrude or obstruct according to the accessibility standard.
3. Before installation, verify that sign surfaces are clean and free of materials or debris that would impair installation.

B. Locate panel signs and mount at heights indicated on drawings and in accordance with ADA Standards and ICC A117.1.

C. Mounting Methods:

1. Concealed Mechanical Fasteners: Using a template, drill holes in substrate aligning with studs on back of sign. Remove loose debris from hole and substrate surface.
   a. Masonry Substrates: Fill holes with adhesive. Leave recess space in hole for displaced adhesive. Place sign in position and push until flush to surface, embedding studs in holes. Temporarily support sign in position until adhesive fully sets.
   b. Thin or Hollow Surfaces: Place sign in position and flush to surface, install mechanical anchors into framing or backing as recommended by sign manufacturer for substrate condition indicated.
2. Two-Face Tape: Clean bond-breaking materials from substrate surface and remove loose debris. Apply tape strips symmetrically to back of sign and of suitable quantity to support weight of sign without slippage. Keep strips away from edges to prevent visibility at sign edges. Place sign in position, and push to engage tape adhesive.

D. Signs Mounted on Glass: Provide opaque sheet matching sign material and finish onto opposite side of glass to conceal back of sign.

3.3 DELIVERY, STORAGE, AND HANDLING

A. Remove and replace damaged or deformed signs and signs that do not comply with specified requirements. Replace signs with damaged or deteriorated finishes or components that cannot be successfully repaired by finish touchup or similar minor repair procedures.

B. Remove temporary protective coverings and strippable films as signs are installed.

C. On completion of installation, clean exposed surfaces of signs according to manufacturer's written instructions, and touch up minor nicks and abrasions in finish. Maintain signs in a clean condition during construction and protect from damage until acceptance by Owner.

D. See Section 017000 - Execution and Closeout Requirements for additional requirements.

END OF SECTION

SECTION 102600 - WALL PROTECTION

PART 1 GENERAL

1.1 SECTION INCLUDES

A. Corner guards.

1.2 REFERENCE STANDARDS

A. ASTM D256 - Standard Test Methods for Determining the Izod Pendulum Impact Resistance of Plastics; 2024.
B. ASTM D543 - Standard Practices for Evaluating the Resistance of Plastics to Chemical Reagents; 2021.
C. ASTM E84 - Standard Test Method for Surface Burning Characteristics of Building Materials; 2026.
D. ASTM F476 - Standard Test Methods for Security of Swinging Door Assemblies; 2023.
E. UL 723 - Standard for Test for Surface Burning Characteristics of Building Materials; Current Edition, Including All Revisions.

1.3 SUBMITTALS

A. See Section 013000 - Administrative Requirements for submittal procedures.
B. Product Data: Indicate physical dimensions, features, anchorage details, and rough-in measurements.
C. Shop Drawings: Include plans, elevation, sections, and attachment details.
D. Samples: Submit samples illustrating component design, configurations, joinery, color and finish.
   1. Submit two sections of corner guards, 12 inches long.
E. Manufacturer's Instructions: Indicate special procedures, perimeter conditions requiring special attention.
F. Sustainable Design Submittals: For adhesives, product data indicating VOC content.
G. Warranty Documentation: Submit manufacturer warranty and ensure that forms have been completed in Owner's name and registered with manufacturer.
H. Maintenance Materials: Furnish the following for Owner's use in maintenance of project:
   1. See Section 016000 - Product Requirements, for additional provisions.
I. Maintenance Data: Manufacturer's instructions for care and cleaning of each type of product. Include information about both recommended and potentially detrimental cleaning materials and methods.

1.4 DELIVERY, STORAGE, AND HANDLING

A. Deliver wall and door protection items in original, undamaged protective packaging. Label items to designate installation locations.
B. Protect work from moisture damage.
C. Protect work from ultraviolet light damage.
D. Do not deliver products to project site until areas for storage and installation are fully enclosed, and interior temperature and humidity are in compliance with manufacturer's recommendations for each type of item.
E. Store products in either horizontal or vertical position, in compliance with manufacturer's instructions.

1.5 WARRANTY

A. See Section 017800 - Closeout Submittals for additional warranty requirements.
B. Manufacturer Warranty: Provide 5 year manufacturer warranty for metal crash rails. Complete forms in Owner's name and register with manufacturer.
C. Installer Warranty: Provide 5 year warranty for metal crash rails commencing on Date of Substantial Completion. Complete forms in Owner's name and register with installer.

PART 2 PRODUCTS

2.1 MANUFACTURERS

A. Corner Guards:
   1. As indicated on drawings.

2.2 PERFORMANCE CRITERIA

A. Surface Burning Characteristics: Comply with ASTM E84 or UL 723; testing by a qualified testing agency. Identify products with appropriate markings of applicable testing agency.
   1. Flame-Spread Index: 25 or less.
   2. Smoke-Developed Index: 450 or less.
B. Impact Strength: Unless otherwise noted, provide protection products and assemblies that have been successfully tested for compliance with applicable provisions of ASTM D256 and/or ASTM F476.
C. Chemical and Stain Resistance: Unless otherwise noted, provide protection products and assemblies with chemical and stain resistance complying with applicable provisions of ASTM D543.
D. Regulatory Requirements: Comply with applicable provisions in the 2010 ADA Standards for Accessible Design.

2.3 PRODUCT TYPES

A. Corner Guards - Surface Mounted:
   1. Material: Type 304 stainless steel, No. 4 finish, 16 gauge, 0.0598 inch thick.
   2. Width of Wings: 3 1/2 inches.
   3. Corner: Square.
   4. Color: As selected from manufacturer's standard colors.
   5. Length: One piece.
B. Adhesives and Primers: As recommended by manufacturer.
C. Mounting Brackets and Attachment Hardware: Appropriate to component and substrate.

2.4 FABRICATION

A. Fabricate components with tight joints, corners and seams.
B. Fabricate wall protection according to requirements indicated for design, performance, dimensions, and member sizes, including thicknesses of components.
C. Factory Assembly: Assemble components in factory to greatest extent possible to minimize field assembly. Disassemble only as necessary for shipping and handling.
D. Provide surfaces free of wrinkles, chips, dents, uneven coloration, and other imperfections. Fabricate members and fittings to produce flush, smooth, and rigid hairline joints.

2.5 FINISHES

A. Protect finishes on exposed surfaces from damage by applying a strippable, temporary protective covering before shipping.
B. Appearance of Finished Work: Noticeable variations in same piece are not acceptable. Variations in appearance of adjoining components are acceptable if they are within the range of approved samples and are assembled or installed to minimize contrast.

PART 3 EXECUTION

3.1 EXAMINATION

A. Verify that rough openings, concealed blocking, and anchors are correctly sized and located.
B. Verify that field measurements are as indicated on drawings.
C. Verify that substrate surfaces for adhered items are clean and smooth.

D. Start of installation constitutes acceptance of project conditions.

3.2 PREPARATION

A. Complete finishing operations, including painting, before installing wall protection.
B. Before installation, clean substrate to remove dust, debris, and loose particles.

3.3 INSTALLATION

A. Install components in accordance with manufacturer's instructions, level and plumb, secured rigidly in position to supporting construction.

3.4 TOLERANCES

A. Maximum Variation From Required Height: 1/4 inch.
B. Maximum Variation From Level or Plane For Visible Length: 1/4 inch.

3.5 CLEANING

A. Clean wall and door protection items of excess adhesive, dust, dirt, and other contaminants as recommended by manufacturer.
B. Remove excess adhesive using methods and materials recommended in writing by manufacturer.

END OF SECTION

SECTION 102800 - TOILET AND BATH ACCESSORIES

PART 1 GENERAL

1.1 SECTION INCLUDES

A. Commercial toilet accessories.
B. Commercial shower accessories.
C. Under-lavatory pipe supply covers.
D. Utility room accessories.

1.2 REFERENCE STANDARDS

A. ADA Standards - 2010 ADA Standards for Accessible Design; 2010.
B. ASTM A666/A666M - Standard Specification for Annealed or Cold-Worked Austenitic Stainless Steel Sheet, Strip, Plate, and Flat Bar; 2024.
C. ASTM A1008/A1008M - Standard Specification for Steel, Sheet, Cold-Rolled, Carbon, Structural, High-Strength Low-Alloy, High-Strength Low-Alloy with Improved Formability, Required Hardness, Solution Hardened, and Bake Hardenable; 2024.
D. ASTM B456 - Standard Specification for Electrodeposited Coatings of Copper Plus Nickel Plus Chromium and Nickel Plus Chromium; 2017 (Reapproved 2022).
E. ASTM G21 - Standard Practice for Determining Resistance of Synthetic Polymeric Materials to Fungi; 2015, with Editorial Revision (2021).

1.3 ADMINISTRATIVE REQUIREMENTS

A. Coordinate the work with the placement of internal wall reinforcement, concealed ceiling supports, and reinforcement of toilet partitions to receive anchor attachments.
B. Coordinate toilet and shower accessory locations with other work to prevent interference with clearances required for access by people with disabilities, and for proper installation, adjustment, operation, cleaning, and servicing of accessories.
C. Deliver inserts and anchoring devices set into concrete or masonry as required to prevent delaying the Work.
D. Coordinate sizes and locations of framing, backing, furring, reinforcements, electrical connections, and other related units of work specified in other Sections to ensure that toilet and shower accessories can be supported and installed as indicated.

1.4 SUBMITTALS

A. See Section 013000 - Administrative Requirements, for submittal procedures.
B. Product Data: Submit data on accessories describing size, finish, details of function, electrical requirements, requirements for cutouts in other work and attachment methods.
C. Samples: For each exposed product and for each finish specified, full size.
   1. Approved full-size Samples will be returned and may be used in the Work.
D. Product Schedule: Indicating types, quantities, sizes, and installation locations by room of each accessory required.
   1. Identify locations using room designations indicated.
   2. Identify accessories using designations indicated.
E. Maintenance Data: For accessories to include in maintenance manuals.

1.5 WARRANTY

A. See Section 017800 - Closeout Submittals, for additional warranty requirements.
B. Warranty Period: 5 years from date of Substantial Completion.

PART 2 PRODUCTS

2.1 PERFORMANCE REQUIREMENTS

A. Structural Performance: Design accessories and fasteners to comply with the following requirements:
   1. Grab Bars: Installed units are able to resist 250 lbf concentrated load applied in any direction and at any point.
   2. Shower Seats: Installed units are able to resist 250 lbf concentrated load applied in any direction and at any point.

B. Accessibility Requirements: Comply with applicable provisions in the 2010 ADA Standards for Accessible Design and the accessibility requirements of the California Building Code for accessories in toilet and shower compartments identified as accessible, and for accessories along an accessible route.
   1. Accessible toilet and shower accessories shall be mounted at heights and at horizontal locations according to the California Building Code.
   2. Toilet paper dispensers and feminine napkin disposal units located on the grab bar side of an accessible toilet room or stall shall not project more than 3 inches from the finished wall surface nor be located closer than 1 1/2 inch clear of the tangent point of the grab bar.

2.2 MANUFACTURERS

A. Provide products of each category type by single manufacturer.

2.3 MATERIALS

A. Accessories - General: Shop assembled, free of dents and scratches and packaged complete with anchors and fittings, steel anchor plates, adapters, and anchor components for installation.

B. Stainless Steel Sheet: ASTM A666/A666M, Type 304, 0.031 inch minimum nominal thickness unless otherwise indicated.

C. Steel Sheet: ASTM A1008/A1008M, Designation CS (cold rolled, commercial steel), 0.036 inch minimum nominal thickness.

D. Fasteners, Screws, and Bolts: Hot dip galvanized; tamper-proof; security type where exposed; stainless or galvanized steel where concealed.

2.4 FINISHES

A. Stainless Steel: Type 304, unless otherwise noted.

B. Chrome/Nickel Plating: ASTM B456, SC 2, polished finish, as indicated on drawings.

2.5 COMMERCIAL TOILET ACCESSORIES

A. Basis-of-Design Manufacturer and Product: As indicated on drawings.

2.6 COMMERCIAL SHOWER ACCESSORIES

A. Basis-of-Design Manufacturer and Product: As indicated on drawings.

2.7 UNDER-LAVATORY PIPE AND SUPPLY COVERS

A. Under-Lavatory Pipe and Supply Covers:
   1. Basis of Design Manufacturers: Subject to compliance with requirements:
      a. Plumberex Specialty Products, Inc.
   2. Insulate exposed drainage piping, including hot, cold, and tempered water supplies under lavatories or sinks to comply with ADA Standards.
   3. Exterior Surfaces: Smooth non-absorbent, non-abrasive surfaces.
   4. Construction: 1/8 inch flexible PVC.
      a. Microbial and Fungal Resistance: Comply with ASTM G21.
   5. Color: White or as indicated on drawings.
   6. Fasteners: Reusable, snap-locking fasteners with no sharp or abrasive external surfaces.

2.8 UTILITY ROOM ACCESSORIES

A. Basis-of-Design Manufacturer and Product: As indicated on drawings.

PART 3 EXECUTION

3.1 EXAMINATION

A. Verify exact location of accessories for installation.
B. Verify that field measurements are as indicated on drawings.
C. See drawings for installation of blocking, reinforcing plates, and concealed anchors in walls and ceilings.

3.2 INSTALLATION

A. Install accessories in accordance with manufacturers' instructions in locations indicated on drawings.
   1. Remove temporary labels and protective coatings.
B. Install plumb and level, securely and rigidly anchored to substrate.
C. Grab Bars: Install to comply with specified structural-performance requirements.
D. Shower Seats: Install to comply with specified structural-performance requirements.
E. Toilet accessories adjacent to grab bars shall be mounted in compliance with California Building Code Section 11B-609.3 and Figure 11B-609.3. Accessories that infringe on these required clearances will be rejected and reinstalled.
F. Mounting Heights: As required by accessibility regulations, unless otherwise indicated.

3.3 ADJUSTING, CLEANING, AND PROTECTION

A. Protect installed accessories from damage due to subsequent construction operations.
B. Adjust accessories for unencumbered, smooth operation. Replace damaged or defective items.
C. Clean and polish exposed surfaces in accordance with manufacturer's written instructions.
D. See Section 017000 - Execution and Closeout Requirements for additional requirements

END OF SECTION

SECTION 102819 - SHOWER ENCLOSURES

PART 1 GENERAL

1.1 SECTION INCLUDES

A. Shower pan and enclosure walls.

1.2 RELATED REQUIREMENTS

1.3 COORDINATION

A. Coordinate sizes and locations of framing, backing, furring, reinforcements, and other related units of work specified in other Sections to ensure that shower enclosures can be supported and installed as indicated.

1.4 REFERENCE STANDARDS

A. ASTM C920 - Standard Specification for Elastomeric Joint Sealants; 2018 (Reapproved 2024).
B. ASTM E84 - Standard Test Method for Surface Burning Characteristics of Building Materials; 2026.
C. ISFA 2-01 - Classification and Standards for Solid Surfacing Material; 2013.
D. NEMA LD 3 - High-Pressure Decorative Laminates; 2005.

1.5 SUBMITTALS

A. See Section 013000 - Administrative Requirements, for submittal procedures.
B. Product Data: Provide manufacturer's literature for enclosure.
C. Shop Drawings: Indicate layout, dimensions, identification of components, and interface with adjacent construction.
D. Verification Samples: Two samples, minimum size of 6 inch by 6 inch, representing actual material and finish of exposed cast polymer.
E. Manufacturer's Installation Instructions: Indicate complete preparation, installation, and cleaning requirements.
F. Manufacturer's qualification statement.
G. Installer's qualification statement.

1.6 QUALITY ASSURANCE

A. Manufacturer Qualifications: Company specializing in manufacturing products specified in this section, with at least 3 years of documented experience.
B. Installer Qualifications: Company specializing in performing work of type specified and with at least 3 years of documented experience and approved by manufacturer.

1.7 DELIVERY, STORAGE, AND HANDLING

A. Store products under cover and elevated above grade in manufacturer's unopened packaging until installation.

1.8 WARRANTY

A. See Section 017800 - Closeout Submittals for additional warranty requirements.
B. Provide 4 year manufacturer warranty against structural failure and excessive degradation of metal finishes.

PART 2 PRODUCTS

2.1 SOURCE LIMITATION

A. Source Limitations: Obtain shower enclosures from single source from single manufacturer.

2.2 PERFORMANCE REQUIREMENTS

A. Accessibility Requirements: Comply with applicable provisions in the 2010 ADA Standards for Accessible Design and the accessibility requirements of the CBC for shower compartments identified as accessible.

2.3 MANUFACTURERS

A. Cast Polymer Shower Floor and Enclosure walls:
   1. Swan Surfaces: www.swanstone.com/#sle.

2.4 SHOWER FLOOR AND ENCLOSURE WALLS

A. Floor Description: Cast polymer pan surface mounted.
B. Surrounds Description: Cast polymer panels over continuous substrate; installed in alcove above shower receptor or tub; available as individual panels or as kits.
C. Panel Thickness: Thickness varies; 0.225 inch thick, minimum.
D. Configuration and Dimensions: As indicated on drawings.

2.5 MATERIALS

A. Cast Polymer Floor and Enclosure Wall Material: Complying with ISFA 2-01 and NEMA LD 3; polymer resin, renewable material filler, and pigments; homogenous, nonporous and capable of being worked and repaired using standard woodworking tools; no surface coating; color and pattern consistent throughout thickness.
   1. Resin: Proprietary; integrally-colored, stain-resistant and resistant to domestic chemicals and cleaners.
   2. Surface Burning Characteristics: Flame spread index of 25 or less, and smoke developed index of 450 or less, Class A, when tested in accordance with ASTM E84.
   3. Color and Pattern: As selected by from manufacturer's full line.
B. Sealant: One-part mildew-resistant silicone sealant, complying with ASTM C920, clear. See section 079200 - Joint Sealants

PART 3 EXECUTION

3.1 EXAMINATION

A. Verify that field measurements are as indicated.
B. Do not begin installation until supports and adjacent substrates are complete.
C. If substrate preparation is the responsibility of another installer, notify Architect of unsatisfactory preparation before proceeding.

3.2 PREPARATION

A. Clean substrates thoroughly prior to installation.
B. Prepare substrates as recommended by the manufacturer.

3.3 INSTALLATION

A. Install in accordance with manufacturer's instructions and approved shop drawings.
B. Set units level, plumb, and true to line, without warp or rack of frames and panels, and anchor securely in place.

C. Fasten components securely in place, with provisions for thermal movement. Install with concealed fasteners unless otherwise indicated.
D. Install components to drain and return water to shower enclosure.
E. Repair, refinish, or replace components damaged during installation.

3.4 FIELD QUALITY CONTROL

A. See Section 014000 - Quality Requirements for additional requirements.
B. Verify enclosure does not leak while shower is running.

3.5 CLEANING AND PROTECTION

A. Remove protective film and temporary stickers from exposed metal surfaces.
B. Protect installed products until Date of Substantial Completion.
C. Touch-up, repair or replace damaged products before Date of Substantial Completion.
D. See Section 017000 - Execution and Closeout Requirements for additional requirements.

3.6 PROTECTION

A. Protect installed products until Date of Substantial Completion.
B. Touch-up, repair or replace damaged products before Date of Substantial Completion.

END OF SECTION

SECTION 104400 - FIRE PROTECTION SPECIALTIES

PART 1 GENERAL

1.1 SECTION INCLUDES

A. Fire extinguishers.
B. Fire extinguisher cabinets.
C. Accessories.

1.2 REFERENCE STANDARDS

A. NFPA 10 - Standard for Portable Fire Extinguishers; 2022.
B. UL (DIR) - Online Certifications Directory; Current Edition.

1.3 PREINSTALLATION MEETINGS

A. Review methods and procedures related to fire extinguishers including, but not limited to, the following:
   1. Schedules and coordination requirements.
   2. Coordination of sizes and locations of fire-protection cabinets with wall depths.

1.4 SUBMITTALS

A. See Section 013000 - Administrative Requirements, for submittal procedures.
B. Product Data: Provide extinguisher operational features.
C. Shop Drawings: Indicate locations of cabinets and cabinet physical dimensions.
D. Product Schedule: For fire-protection cabinets.
   1. Indicate whether recessed, semirecessed, or surface mounted. Coordinate fire-protection cabinet schedule with fire-extinguisher schedule.
E. Manufacturer's Installation Instructions: Indicate special criteria and wall opening coordination requirements.
F. Manufacturer's Certificate: Certify that products meet or exceed specified requirements.
G. Maintenance Data: Include test, refill or recharge schedules and re-certification requirements.
H. Warranty: Sample of special warranty.

1.5 FIELD CONDITIONS

A. Do not install extinguishers when ambient temperature may cause freezing of extinguisher ingredients.

1.6 QUALITY ASSURANCE

A. Manufacturer Qualifications: A firm with not less than 10 years' experience regularly engaged in the production and sales of fire extinguishers that have been used for similar applications.
B. Installer Qualifications: A firm experienced with installing fire protection cabinets similar in material, design, and extent to that indicated for this Project, whose work has resulted in installations with a record of successful in-service performance, and that employs installers and supervisors who are trained and approved by manufacturer to perform work of this Section.

1.7 WARRANTY

A. Special Warranty: Manufacturer's standard form in which manufacturer agrees to repair or replace fire extinguishers that fail in materials or workmanship within specified warranty period.
   1. Failures include, but are not limited to, the following:
      a. Failure of hydrostatic test according to NFPA 10 when testing interval required by NFPA 10 within the warranty period.
      b. Faulty operation of valves or release levers.
   2. Warranty Period: 6 years from date of Substantial Completion.

PART 2 PRODUCTS

2.1 MANUFACTURERS

A. Fire Extinguisher Cabinets and Accessories:
   1. Activar Construction Products Group, Inc. - JL Industries: www.activarcpg.com/#sle.
   2. Kidde, a unit of United Technologies Corp: www.kidde.com/#sle.
   3. Larsen's Manufacturing Co: www.larsensmfg.com/#sle.
   4. Potter-Roemer: www.potterroemer.com/#sle.

2.2 PERFORMANCE REQUIREMENTS

A. Extinguisher Installation: Fire extinguishers and mounting brackets shall be installed in compliance with the California Fire Code, including Section 906.9.
B. Accessibility Requirements: Fire extinguishers and mounting brackets along an accessible route shall be installed in compliance with the accessibility requirements of the California Building Code and with the 2010 ADA Standards for Accessible Design including, Sections 308 and 309.

2.3 FIRE EXTINGUISHERS

A. Fire Extinguishers - General: Comply with product requirements of NFPA 10 and applicable codes, whichever is more stringent.
   1. Provide extinguishers labeled by UL (DIR) for purpose specified and as indicated.
B. Multipurpose Dry Chemical Type Fire Extinguishers: Carbon steel tank, with pressure gauge.
   1. UL-rated nominal capacity, with monoammonium phosphate-based dry chemical in manufacturer's standard enameled container.
   2. Type A - All areas, unless noted otherwise:
      a. Class: 2A-10BC.
      b. Size: 5 pounds.
      c. Finish: Red Enamel.
      d. Mounting: Cabinet.
   3. Type B - Mechanical, Electrical rooms
      a. Class: 4A-60BC.
      b. Size: 10 pounds.
      c. FInish: Red Enamel.
      d. Wall mounted bracket.
C. FE-36 Clean Agent Type Fire Extinguishers - Electrical and IDF rooms: Stainless steel tank, with pressure gauge.
   1. Class: B:C type.
   2. Type: Halocarbon-based and Carbon Dioxide.
   3. Size: 5 pound.
   4. Finish: Polished chrome.
   5. Temperature Range: Minus 40 degrees F to 120 degrees F.

2.4 FIRE EXTINGUISHER CABINETS

A. Cabinet Configuration: Surface or Semi-recessed type.
   1. Size to accommodate accessories.
   2. Trim: Flat square edge, with 1-1/4 to 1-1/2 inch inch wide face.
B. Door: Steel sheet, vertical duo panel with frame.
C. Door Glazing: Float glass, clear, 1/8 inch thick, and set in resilient channel glazing gasket.
D. Cabinet Mounting Hardware: Appropriate to cabinet, with pre-drilled holes for placement of anchors.
E. Fabrication: Weld, fill, and grind components smooth.
F. Finish of Cabinet Exterior Trim and Door: No.4 - Brushed stainless steel.
G. Finish of Cabinet Interior: White colored enamel.

2.5 MOUNTING BRACKET

A. Mounting Brackets: Manufacturer's standard steel, designed to secure fire extinguisher to wall or structure, of sizes required for types and capacities of fire extinguishers indicated, with plated or baked-enamel finish.

B. Identification: Lettering complying with authorities having jurisdiction for letter style, size, spacing, and location. Locate as indicated by Architect.

2.6 ACCESSORIES

A. Lettering: FIRE EXTINGUISHER decal, or vinyl self-adhering, pre-spaced white lettering in accordance with authorities having jurisdiction (AHJ).

PART 3 EXECUTION

3.1 EXAMINATION

A. Examine walls and partitions for suitable framing depth and blocking where recessed cabinets will be installed.

B. Verify rough openings for cabinet are correctly sized and located.

3.2 INSTALLATION

A. Install in accordance with manufacturer's instructions.

B. Place extinguishers in cabinets and on wall brackets.

C. General: Install fire extinguishers and mounting brackets in locations indicated and in compliance with requirements of authorities having jurisdiction and complying with accessibility requirements:

1. Cabinet: Recessed or Semi-Recessed Units (projecting less than 4 inches from wall): Mount in compliance with all of the following:
   a. 60 inches maximum from finished floor to top of fire extinguishers weighing 40 lb or less NFPA 10.
   b. 42 inches maximum from finished floor to top of fire extinguishers weighing more than 40 lb. NFPA 10.
   c. 48 inches maximum from finished floor to the handle (ADA).
2. Cabinet: Semi-Recessed or Surface-Mounted Units (projecting more than 4 inches from wall): Mount in compliance with all of the following:
   a. 60 inches maximum from finished floor to top of fire extinguishers weighing 40 lb or less NFPA 10.
   b. 42 inches maximum from finished floor to top of fire extinguishers weighing more than 40 lb. NFPA 10.
   c. 48 inches maximum from finished floor to the handle (ADA).
   d. 27 inches maximum from finished floor to bottom of fire extinguisher (ADA).
3. Mounting Brackets: Fasten mounting brackets to surfaces, square and plumb, at locations indicated.

3.3 ADJUSTING AND CLEANING

A. Remove temporary protective coverings and strippable films, if any, as fire-protection cabinets are installed unless otherwise indicated in manufacturer's written installation instructions.

B. Adjust fire-protection cabinet doors to operate easily without binding. Verify that integral locking devices operate properly.

C. On completion of fire-protection cabinet installation, clean interior and exterior surfaces as recommended by manufacturer.

D. Touch up marred finishes, or replace fire-protection cabinets that cannot be restored to factory-finished appearance. Use only materials and procedures recommended or furnished by fire-protection cabinet and mounting bracket manufacturers.

E. Replace fire-protection cabinets that have been damaged or have deteriorated beyond successful repair by finish touchup or similar minor repair procedures.

3.4 MAINTENANCE

A. Provide a separate maintenance contract for specified maintenance service.

END OF SECTION

SECTION 123600 - COUNTERTOPS

PART 1 GENERAL

1.1 SECTION INCLUDES

A. Countertops for architectural cabinet work.

1.2 REFERENCE STANDARDS

A. ASTM E84 - Standard Test Method for Surface Burning Characteristics of Building Materials; 2026.
B. AWMAC/WI (NAAWS) - North American Architectural Woodwork Standards; 2021, with Errata.
C. ISFA 3-01 - Classification and Standards for Quartz Surfacing Material; 2013.
D. NEMA LD 3 - High-Pressure Decorative Laminates; 2005.
E. NSI (DSDM) - Dimensional Stone Design Manual, Version VIII; 2016.
F. PS 1 - Structural Plywood; 2023.

1.3 SUBMITTALS

A. See Section 013000 - Administrative Requirements for submittal procedures.
B. Product Data: Manufacturer's data sheets on each product to be used, including:
   1. Preparation instructions and recommendations.
   2. Storage and handling requirements and recommendations.
   3. Specimen warranty.
C. Shop Drawings: Complete details of materials and installation ; combine with shop drawings of cabinets and casework specified in other sections.
D. Verification Samples: For each finish product specified, minimum size 6 inches square, representing actual product, color, and patterns.
E. Test Reports: Chemical resistance testing, showing compliance with specified requirements.
F. Certificate: Submit labels and certificates required by quality assurance and quality control programs.
G. Installer's qualification statement.
H. Installation Instructions: Manufacturer's installation instructions and recommendations.
I. Maintenance Data: Manufacturer's instructions and recommendations for maintenance and repair of countertop surfaces.

1.4 QUALITY ASSURANCE

A. Fabricator Qualifications: Natural Stone Institute (NSI) Accredited Natural Stone Fabricator; www.naturalstoneinstitute.org/#sle, with not less than 10 years of documented experience in the fabrication of quartz agglomerate countertops.
B. Installer Qualifications: Company specializing in performing work of the type specified in this section, with not less than 3 years of documented experience.
C. Quality Certification:
   1. Provide labels or certificates indicating that the installed work complies with AWMAC/WI (NAAWS) requirements for grade or grades specified.
   2. Provide designated labels on shop drawings as required by certification program.
   3. Provide designated labels on installed products as required by certification program.
   4. Submit certifications upon completion of installation that verifies this work is in compliance with specified requirements.

1.5 DELIVERY, STORAGE, AND HANDLING

A. Store products in manufacturer's unopened packaging until ready for installation.
B. Store and dispose of solvent-based materials, and materials used with solvent-based materials, in accordance with requirements of local authorities having jurisdiction.

C. Deliver countertops only after casework and supports on which they will be installed have been completed in installation areas.

1.6 FIELD CONDITIONS

A. Maintain environmental conditions (temperature, humidity, and ventilation) within limits recommended by manufacturer for optimum results. Do not install products under environmental conditions outside manufacturer's absolute limits. Building to be fully enclosed, wet work completed and HVAC system operating and maintaining temperature between 60 and 85 degrees F and realtive humidity between 17 and 50 percent during the remainder of the construction period

B. Field Measurements: Where countertops are indicated to fit to other construction, verify dimensions of other construction by field measurements before fabrication, and indicate measurements on Shop Drawings. Coordinate fabrication schedule with construction progress to avoid delaying the Work.

C. Established Dimensions: Where countertops are indicated to fit to other construction, establish dimensions for areas where countertops are to fit. Provide allowance for trimming at site, and coordinate construction to ensure that actual dimensions correspond to established dimensions.

1.7 COORDINATION

A. Coordinate locations of utilities that will penetrate countertops or backsplashes

1.8 WARRANTY

A. See Section 017800 - Closeout Submittals, for additional warranty requirements.

B. Special warranty for Quartz Agglometrate Countertops: Manufactuere's standard or customized warranty in which manufacturer agrees to repair or replace quartz agglomerate countertops that fail in materials or workmanship within specified warranty period.

1. Warranty Period: 10 years from date of Substantial Completion.

PART 2 PRODUCTS

2.1 COUNTERTOPS

A. Natural Quartz and Resin Composite Countertops: Sheet or slab of natural quartz and plastic resin over continuous substrate.

1. Flat Sheet Thickness: 3/4 inch, minimum.
2. Natural Quartz and Resin Composite Sheets, Slabs and Castings: Complying with ISFA 3-01 and NEMA LD 3; orthophthalic polyester resin and pigments; homogenous, non-porous and capable of being worked and repaired using standard stone fabrication tools; no surface coating; color and pattern consistent throughout thickness.
   a. Manufacturers:
      1) As indicated on drawings.
   b. Factory fabricate components to the greatest extent practical in sizes and shapes indicated; comply with NSI (DSDM).
   c. Surface Burning Characteristics: Flame spread index of 25, maximum; smoke developed index of 450, maximum; when tested in accordance with ASTM E84.
   d. Finish on Exposed Surfaces: As indicated on drawings.
   e. Color and Pattern: As indicated on drawings.
3. Other Components Thickness: 1/2 inch, minimum.
4. Back and End Splashes: Same sheet material, square top; height as indicated on drawings.
5. Skirts: As indicated on drawings.
6. Fabricate in accordance with manufacturer's standard requirements.

2.2 MATERIALS

A. Plywood for Supporting Substrate: PS 1 Exterior Grade, A-C veneer grade, minimum 5-ply; minimum 5/8 inch thick; join lengths using metal splines.

B. Adhesives: Chemical resistant waterproof adhesive as recommended by manufacturer of materials being joined.
C. Joint Sealant: See section 079200 Joint sealant, color by Architect.
D. Varnish / Sealer: Waterproof protection for wood based substrate / subtop cut edges.
   1. Product Basis-of-Design:
      a. Thompson WaterSeal.

2.3 FABRICATION

A. Fabricate tops and splashes in the largest sections practicable, with top surface of joints flush.
   1. Join lengths of tops using best method recommended by manufacturer.
   2. Fabricate to overhang fronts and ends of cabinets 1 inch except where top butts against cabinet or wall, unless otherwise indicated on drawings.
   3. Prepare all cutouts accurately to size; replace tops having improperly dimensioned or unnecessary cutouts or fixture holes.
B. Provide back/end splash wherever counter edge abuts vertical surface unless otherwise indicated.
   1. Secure to countertop with concealed fasteners and with contact surfaces set in waterproof glue.
   2. Height: 4 inches, unless otherwise indicated on drawings.
C. Cutouts and Holes:
   1. Fittings: Drill countertops in shop for plumbing fittings, undercounter soap dispensers, and similar items
   2. Wire-Management Gromments: Circular, molded-plastic grommets and matching plastic caps with slot for wire passage.

PART 3 EXECUTION

3.1 EXAMINATION

A. Do not begin installation until substrates have been properly prepared.
B. If substrate preparation is the responsibility of another installer, notify Architect of unsatisfactory preparation before proceeding.
C. Verify that wall surfaces have been finished and mechanical and electrical services and outlets are installed in proper locations.

3.2 PREPARATION

A. Clean surfaces thoroughly prior to installation.
B. Prepare surfaces using the methods recommended by the manufacturer for achieving the best result for the substrate under the project conditions.

3.3 INSTALLATION

A. Securely attach countertops to cabinets using concealed fasteners. Make flat surfaces level; shim where required.
B. Fasten subtops to cabinets by screwing through subtops into cornerblocks of base cabinets. Shim as needed to align subtops in a level plane.
C. Secure quartz countertops to subtop with adhesive as recommended by manufacturer's instructions. Bond joints with adhesive and draw tight as countertops are set. Mask areas of countertops adjacent to joints to prevent adhesive excess marks.
   1. Install metal splines in kerfs in countertop edges at joints where indicated. Fill kerfs with adhesive before inserting splines and remove excess immediately after adjoining units are drawn into position.
   2. Clamp units to temporary bracing, suppots or each other to ensure that counterops are properly aligned and joints are of specified width.
D. Mask areas adjacent to all adhesive adhered components to prevent adhesive excess marks.

E. Complete cutouts not finished in shop. Mask areas of countertops adjacent to cutouts to prevent damage during cutting. Cutouts to accurately fit items to be installed, and at right angles to finished surfaces unless beveling is required for clearance. Ease edges slightly to prevent snipping.
   1. Seal edges of cutouts in composite wood subtops by saturating with varnish / sealer.
F. Seal joint between back/end splashes and vertical surface, see Section 079200 - Joint Sealants.

3.4 TOLERANCES

A. Variation From Horizontal: 1/8 inch in 10 feet, maximum. Do not exceed 1/64 inch difference between planes of adjacent units.
B. Offset From Wall, Countertops: 1/8 inch maximum; 1/16 inch minimum.
C. Field Joints: 1/16 inch wide, maximum.

3.5 CLEANING

A. Clean countertops surfaces thoroughly.
B. Clean countertops as work progresses. Remove adhesive, grout, mortar, and sealant excess immediately.
C. Clean quartz agglomerate countertops no fewer than six days after completion of installation. Clean as recommended in writing by manufacturer.
D. See Section 017000 - Execution and Closeout Requirements for additional requirements.

3.6 PROTECTION

A. Protect installed products until completion of project. Provide suitable covering over countertop surfaces, taped to underside of countertop at a minimum of 48 inches. Remove protection at Substantial Completion.
B. Touch-up, repair or replace damaged products before Date of Substantial Completion.
C. Remove and replace quartz countertops for the following:
   1. Broken, chipped, stained, or otherwise damaged stone. Stone may be repaired if methods and results are approved by Architect.
   2. Defective countertops.
   3. Defective joints, including misaligned joints.
   4. Countertops and joints not matching approved Samples and mockups.
   5. Countertops not complying with other requirements indicated.
D. See Section 017000 - Execution and Closeout Requirements for additional requirements.

END OF SECTION

SECTION 211313 - FIRE SUPPRESSION SYSTEM

PART 1 GENERAL

1.1 GENERAL AND SPECIAL CONDITIONS

A. General and special conditions apply to the work in this section.

B. The Contractor shall furnish all equipment, materials, tools, labor, engineering, drawings, etc. necessary for a complete fire protection system, with said systems being made ready for operation in accordance with the requirements of the Authorities Having Jurisdiction. The purpose of the permit drawings and specifications is to convey to the Contractor the scope of work required, all of which the Contractor is responsible to furnish, install, adjust, and make operable. The omission by the Owner of any necessary system component as required by the Authorities Having Jurisdiction, in the specifications shall not relieve the Contractor of the responsibility for providing such necessity, without additional cost to the Owner. The Contractor shall visit the site before submitting his bid and shall examine all existing physical conditions that may be material to the performance of his work. No extra payments will be allowed to the Contractor as a result of extra work made necessary by their failure to do so. Any case of error, omission, discrepancy or lack of clarity shall be promptly identified to the Owner, Architect, and Engineer for clarification prior to the bid due date.

C. The Contractor shall provide all devices and equipment required by these specifications. Under no circumstances will the Contractor delete any equipment or devices without the written directive of the Owner.

D. Automatic fuel stop valves, where required by others, shall be arranged to close upon activation of the fire suppression system that covers the engine installation, including auxiliary equipment.

E. Mechanical ventilation systems, where provided, shall be arranged to shut down upon activation of the fire suppression system within the engine enclosure.

F. Sprinklers shall not be directed at engine components that are susceptible to thermal shock or deformation.

1.2 SYSTEM ABBREVIATIONS AND DEFINITIONS

A. AHJ – Authority Having Jurisdiction (Morongo Reservation Fire Department).

B. ANSI – American National Standards Institute.

C. Approved – Unless otherwise stated, materials, equipment or submittals approved by the Engineer.

D. ASTM – American Society for Testing and Materials.

E. AWS – American Welding Society.

F. AWWA – American Water Works Association.

G. Concealed – Where used in connection with installation of piping or conduit and accessories, shall mean, “Hidden from sight” as in shafts, furred spaces, in soffits or above suspended ceilings.

H. Contractor – The Company awarded the prime contract for this work and any of its subcontractors, vendors, suppliers, or fabricators.

I. Engineer – Jensen Hughes.

J. Exposed – Where used in connection with installation of piping or conduit and accessories, shall mean “visible” or “not concealed.”

K. FM – FM Global.

L. FM Approved – Materials or equipment approved by FM Global and included in the most recent edition of the FM Approval Guide.

M. Furnish – Supply materials.

N. GPM – Gallons per minute.

O. Install – Install materials, mount, and connect equipment or assemblies.

P. IRI – Industrial Risk Insurers.

Q. ISO – Insurance Services Office.

R. NFPA – National Fire Protection Association.

S. Owner – Morongo.

T. PIV – Post indicating valve.

U. Provide – Furnish, install, and connect.

V. PSI – pounds per square inch.
W. QR – Quick Response Sprinkler
X. Remove – Remove material and equipment and restore surface.
Y. UL – Underwriters Laboratories, Inc.
Z. UL Listed – Materials or equipment by Underwriters Laboratories and included in the most recent edition of the UL Fire Protection Equipment Directory.

1.3 SCOPE OF WORK

A. Provide fire protection systems for the Morongo Combined Heating & Power (CHP) Project as outlined in the project specifications, including all labor, materials, permits, shop drawings and hydraulic calculations needed to furnish and install a complete and functional automatic fire protection system, and all of the following:
1. Wet pipe automatic sprinkler system for the entire structure, complete with supervised control valves, inspector's test and main drain assemblies, vane type water flow switch, and pressure gauges.
2. Connect riser to existing fire water loop.
3. Earthquake bracing and flexible couplings.
4. Furnish, install, and adjust all waterflow and valve supervisory switches.
5. Coordinate all work with other trades.
6. Install pipe offsets as required to coordinate around other trades.
7. Shop drawings.
8. Two (2) sets of operating instructions and valve diagrams.
9. As-built drawings. The Contractor will be required to provide as-built drawings on disk/CD in AutoCAD format, in addition to required reproducible and blueline drawings.
10. On-site project supervision.
11. Required signs in English at all control valves, main drains, auxiliary drains and inspector's test connections, etc., including hydraulic placards, in accordance with NFPA 13 requirements.
12. All required system testing in accordance with NFPA 13, 24, and 25.
13. Warranty on all materials and labor.
14. All permits, taxes, and fees, including AHJ inspection and testing fees necessary to complete the specified work.

1.4 RELATED WORK

A. Materials and methods specified in other sections, included but not limited to:
1. Cutting and patching.
2. Painting of finished surfaces at pipe penetrations by other than Contractor.

1.5 DESIGN CRITERIA

A. Suppression System
1. An automatic wet pipe sprinkler system shall be installed in the Generator Room and Storage Room. The system shall be hydraulically designed to provide a discharge density of 0.30 gpm/ft2 over the entire area or the remote 2,500 ft2, whichever is less. The design shall use high temperature sprinklers with a maximum coverage of 100 ft2. A 500-gpm hose demand needs to be added to the sprinkler demand at the base-of-riser.
2. Automatic wet pipe sprinkler protection shall be provided for the Electrical Rooms, Control Room, Janitor Room, Comm Room, Batt Room, LV Room, UPS Room, and Riser Room. The minimum required design density is 0.15 gpm per ft2 over the entire area of the room. A 250-gpm hose demand needs to be added to the sprinkler demand at the base-of-riser.
3. An automatic wet pipe sprinkler protection shall be provided for the Restroom and Entrance. The minimum required design density is 0.10 gpm per ft2 over the entire area of the room. A 100-gpm hose demand needs to be added to the sprinkler demand at the base-of-riser.
B. Water Supply

1. Pipe sizing will be determined by hydraulic calculations in accordance with NFPA 13 requirements and will be based upon the fire flow test result from Morongo. The fire flow test has not been performed yet.

1.6 APPLICABLE STANDARDS

A. National Fire Protection Association 13 (NFPA 13) – “Standard for the Installation of Sprinkler Systems,” 2022 Edition.
B. National Fire Protection Association 24 (NFPA 24) – “Standard for the Installation of Private Fire Service Mains,” 2019 Edition.
C. National Fire Protection Association 25 (NFPA 25) – “Standard for the Inspection, Testing and Maintenance of Water-Based Fire Protection Systems,” 2013CA Edition as amended by the State of California.
D. National Fire Protection Association 37 (NFPA 37) – “Installation and Use of Stationary Combustion Engines and Gas Turbines” 2018 Edition
E. National Fire Protection Association 72 (NFPA 72) – “National Fire Alarm and Signaling Code,” 2022 Edition.
F. California Building Code (CBC), 2022 Edition.
G. California Fire Code (CFC), 2022 Edition.
H. Owner’s Insurance Carriers Policies.
I. American National Standards Institute, Inc. (ANSI) Standards, current editions:
   1. A21.10 a – Gray-Iron and Ductile-Iron Fittings, 2 inch through 48 inch for Water and Other Liquids.
   2. A21.11 – Rubber-Gasket Joints for Cast-Iron and Ductile-Iron Pressure Pipe and Fittings.
   3. B16.1 – Cast-Iron Pipe Flanges and Flanged Fittings, 24, 125, 250, and 800 pounds.
   4. B16.3 – Malleable-Iron Threaded Fitting, Class 150 and 300.
   5. B16.4 – Cast-Iron Threaded Fitting, Class 125 and 250.
   6. B18.2.1 – Square and Hex Bolts and Screws.
   7. B18.2.2 – Square and Hex Nuts.
   8. B36.10 – Welded and Seamless Wrought Steel Pipe.
   9. B112.1 – Hose Valves for Fire Protection Services.
J. American Society for Testing and Materials (ASTM) Standards, current edition:
   1. A 53 – Specifications for Welded and Seamless Steel Pipe.
   2. A 307 – Carbon Steel Externally and Internally Threaded Standard Fasteners.
K. Federal Specifications (Fed. Spec.):
   1. GG-G76D – Gages, Pressure and Vacuum, Dial Indicating, (for Air, Steam, Oil, Water, Ammonia, and Chloro-Floro Hydrocarbon Gases).
   2. WW-P-421c – Pipe, Cast Gray and Ductile Iron, Pressure (for Water and Other Liquids).
   3. WW-P-521f – Pipe Fittings, Flange Fittings and Flanges, Steel and Malleable Iron (Threaded and Butt-Welding) 150 Pound.
   4. WW-V-51E – Valve, Angle, Check and Globe, Bronze (125, & Int. AM-2 150 and 200 Pound, Threaded End, Flange Ends, (GSA-FFS) – Solder Ends and Brazed End, for Land Use).
   5. WW-V-58B – Valves, Gate, Cast Iron; Threaded and Flanged (for Land Use).
L. FM Publication:
   1. Approval Guide.
M. Underwriters Laboratories, Inc. (UL) Publication:
   1. Fire Protection Equipment List (Annually with Quarterly Supplements).
N. American Water Works Association (AWWA) Standards, current editions:
   1. C200-75 – Steel Water Pipe 6 Inches and Larger.
   2. C207-55 – Steel Pipe Flanges.
   3. C500-71 – Gate Valves – 3 through 48 inch – for Water and Other Liquids.
   4. C105 – Polyethylene Encasement.
O. American Welding Society (AWS) Standards, current edition:
   1. D10.9 – Qualification of Welding Procedures and Welders for Piping and Tubing, Level AR-3.
   2. B2.1 – Specifications for Qualification of Welding Procedures and Welder for Piping and Tubing.
P. American Standard Mechanical Engineers (ASME) Standards, current edition:

1. B1.20.1 – Pipe Threads, General Purpose.

1.7 SUBMITTALS

A. Shop Drawings
1. Submit three sets of complete shop drawings, three sets of manufacturer's data and three sets of hydraulic calculations to Owner and Engineer for all necessary reviews prior to fabrication of materials.
2. Contractor shall submit complete system packages. Partial system submittals will be rejected.
3. Hydraulic calculations shall include a water supply graph and hydraulic cover sheet. The cover sheet shall include the name and location of the calculated area, ceiling height, occupancy, design criteria, sprinkler spacing, system type, sprinkler make, model, K-factor and temperature rating, flow requirements, C-factor used, water supply data and source of information.
4. Prepare shop drawings with a minimum scale of 1/8 inch = 1 foot-0 inch for plans, and 1/4 inch = 1 foot-0 inch for details. Show all piping, sprinklers, hangers, type of pipe, tube connections, outlets, type of roof construction, and occupancy of each area, including ceiling and roof heights as required by NFPA 13. When welding is planned, shop drawings shall indicate the sections to be shop welded and the type of welded fittings to be used. All drawings shall be prepared using AutoCAD.
5. Design shall be based on these specifications and the appropriate NFPA standards.
6. Shop drawings shall include details of earthquake sway bracing, including the appropriate calculations.

B. Changes
1. Make no changes in installation from layout as shown on the approved drawings unless change is specifically approved by the Engineer and AHJ. This does not include revisions for the purpose of coordination.
2. Any pipe fabricated and/or installed before all approvals are obtained at the Contractor's own expense and responsibility. Any changes made to the approved drawings other than as stated above are at the Contractor's own expense and responsibility.

C. Manufacturer's Data
1. Provide data from manufacturer on the following devices, including installation, maintenance, and testing procedures, dimensions, wiring diagrams, etc. Where any devices that are provided or furnished involve work by someone other than the Contractor, submit additional data copies directly to the Contractor. At a minimum, the following data sheets shall be provided:
   a. Sprinklers and escutcheons.
   b. Pipe, fittings, and hangers.
   c. Initiating Devices.
   d. Control valves.
   e. Fire department connection.
   f. Check valves.
   g. Waterflow devices.
   h. Valve supervisory devices.
   i. Bell.
   j. Fire stopping materials (including installation detail).

D. As-Built Drawings
1. Maintain at the site an up-to-date marked set of as-built drawings, which shall be corrected and delivered to the Owner upon completion of work.
2. Upon completion, furnish the Owner with three (3) sets of reproducible sepia prints, and one set in electronic AutoCAD "DWG" format of each reviewed shop drawing, revised to show "as-built" conditions

E. Samples
1. Provide one sample of each type of sprinkler and escutcheon.

F. Final Inspection and Test
1. The Contractor shall make arrangements with the Owner and Engineer for final inspection and witnessing of the final acceptance tests. The Owner and Engineer will witness the final inspection.
2. Perform all tests and inspections required by the referenced codes and standards, the AHJ, and the Owner.

3. When the Engineer visits the job site for final inspection and tests after being advised by the Contractor that the work is complete and ready for test, if the work has not been completed or the final acceptance tests are unsatisfactory, the Contractor shall be responsible for the Engineer's extra time and expenses for reinspection and witnessing the retesting of the work. Such extra fees shall be deducted from payments by the Owner to the Contractor.
4. Upon completion of final inspections and tests, as required by appropriate NFPA Standards, submit copies of Standard Contractor's Material and Test Certificate.

G. Operating Instructions
1. At the completion of the work, provide a small-scale plan of building indicating the locations of all control valves, low point drains, and inspector's test valves. The plans shall be neatly drawn and color-coded to indicate the portion of the building protected by each system, framed under glass and permanently mounted on the wall at the sprinkler room.
2. Furnish one copy of NFPA 25 and bound set of printed operating and maintenance instructions to the Owner, and adequately instruct the Owner's maintenance personnel in proper operation and test procedures of all fire protection components provided, furnished, or installed.

1.8 SPARE PARTS

A. Provide and install one spare sprinkler cabinet, complete with 12 sprinklers of all types and temperature ratings used throughout the installation. The cabinet shall be equipped with sprinklers and special sprinkler wrenches required for each type of sprinkler installed.
B. Confer with the Owner's representative for exact location of cabinet.

1.9 GUARANTEE

A. The Contractor shall guarantee all materials and workmanship for a period of one year beginning with the date of final acceptance by the Owner. The Contractor shall be responsible during the design, installation, testing and guarantee periods for any damage caused by his (or his subcontractors') work, materials, or equipment.

1.10 PRODUCT DELIVERY

A. Delivery of Materials: Delivery of all materials and equipment to the job site shall be scheduled to assure compliance with the predetermined construction schedules.
B. Storage of Materials, Equipment, and Fixtures: Contractor shall be responsible for storage of materials on job site, including furnishing of any storage facilities or structures required.
C. Handling Materials and Equipment: Contractor shall be responsible for on-site handling of materials and equipment.

1.11 QUALITY ASSURANCE

A. Testing Agency: All materials shall be UL listed or FM approved for their intended use.
B. Regulatory Agencies: State and local building codes and ordinances, and fire department requirements shall apply.
C. The Contractor shall be fully experienced and licensed in all aspects of the fire protections systems herein specified.
D. Similar materials shall be from a single manufacturer.

1.12 JOB CONDITIONS

A. Damage: Protect all unfinished work to prevent damage and furnish protection of all surrounding areas where necessary.
B. Leak Damage: The Contractor shall be responsible during the installation and testing periods of the sprinkler system for any damage to the work of others, to the building or its contents caused by leaks in any equipment, by unplugged or disconnected pipes or fittings, or by overflow, and shall pay for the necessary replacements or repairs to work of others damaged by such leakage.

1.13 EMERGENCY SERVICE

A. The Contractor shall provide emergency repair service for the sprinkler system within four hours of a request for such service by the Owner during the warranty period. This service shall be available on a 24-hour per day, seven-day per week basis.

1.14 TRAINING

A. The Contractor shall conduct one training session of two hours to familiarize the facility personnel with the features, operation, and maintenance of the sprinkler systems. Training sessions shall be scheduled by the Owner at a mutually agreeable time to the Contractor and the Owner.

1.15 PERMITS AND FEES

A. Pay for all permit fees, and charges required for this work.

PART 2 PRODUCTS

2.1 GENERAL

A. All components shall be used in accordance with the manufacturer's recommendations and its UL listing and/or FM approval.
B. The naming of manufacturers in the specifications shall not be construed as eliminating the materials, products or services of other manufacturers and suppliers providing approved equivalent items.
C. The substitutions of materials or products other than those named in the specifications are subject to proper approval of the Owner granted in writing.

2.2 ABOVEGROUND PIPE

A. Feed Mains and Branch Line Piping
1. Pipe shall be new, rated for 175 psi working pressure, conforming to ASTM specifications, and have the manufacturer's name and brand along with the applicable ASTM standard marked on each length of pipe.
a. Pipe used shall be black steel and must comply with the specifications of the American Society for Testing and Materials, ASTM A 53 for welded and seamless steel pipe.
b. Schedule 40 piping is required for sizes 2 inches and less. Pipe ends shall be threaded or roll grooved in accordance with NFPA 13.
c. Schedule 10 pipe is acceptable in sizes 2-½ inches and larger. Pipe ends shall be welded or roll grooved in accordance with NFPA 13.
d. Hot-dipped galvanized pipe shall be used when exposed to the outside.
e. Hot-dipped galvanized pipe shall be used for drain pipe.
f. A seismic separation assembly shall be installed where sprinkler piping crosses a buildings seismic separation joints.

2.3 FITTINGS AND JOINTS

A. Steel Pipe
1. Screwed fittings shall be cast iron, 175-pound class, black, and in accordance with ANSI B 16.4 or malleable iron, 175-pound class, black and in accordance with ANSI B 16.3. Bushings shall not be used.
2. Weld fittings shall be steel, standard weights, black, and in accordance with ASME B 16.9, ASME B 16.25, ASME B 16.5, ASME B 16.11 and ASTM A 234.
3. Grooved fittings and couplings shall be produced by the same manufacturer.
4. Grooved couplings shall be dimensionally compatible with pipe.

2.4 SPRINKLERS

A. Listed lead-coated or corrosion-proof sprinklers shall be installed in all areas exposed to outside atmosphere or to corrosive conditions.

B. Sprinklers in the generator room shall be standard response type, K-factor of 8.0 minimum, and high temperature rating. Sprinklers in the Ordinary Hazard Group 1 occupancy areas shall be standard response or quick-response type, K-factor of 5.6 minimum. Sprinklers in the Light Hazard occupancy areas shall be quick-response type, K-factor of 5.6 minimum.

C. Sprinklers in unfinished areas shall be rough brass finish. Sprinklers in finished areas shall be white polyester finish..

2.5 VALVES

A. Control valves shall be listed/approved indicating type.
   1. OS & Y valves shall be resilient seat type.
   2. Butterfly valves shall be gear operated.
   3. Ball valves shall be gear operated with full port.

B. Drain, trim, and test valves shall be approved.

C. Check Valves
   1. Check valves for water supply, fire department connections and risers shall have removable covers for maintenance without removing the valve from the system.
   2. Check valves in the trim shall be approved.

2.6 SLEEVES FOR WALL/FLOOR PENETRATIONS

A. Sleeves through walls and floors shall be of a type that can be made watertight and fire stopped.
   1. Sleeve sizes shall be as required by NFPA 13 for Earthquake Protection.

2.7 WATER FLOW ALARM AND SUPERVISORY DEVICES

A. Devices shall be listed/approved for the intended application and compatible with the alarm system.
   1. Supervisory (Tamper) switches provided with butterfly/ball valves by the valve manufacturer shall be listed/approved as an assembly.

B. Water Flow Switches.
   1. Vane type flow switches shall be compatible with the alarm system and provided by the valve manufacturer.

2.8 SIGNS

A. Provide standard metal signs in English in accordance with NFPA 13.

B. Provide hydraulic calculation information signs at risers in accordance with NFPA 13.

2.9 HANGERS

A. All hanger components shall be of an approved and listed type.
   1. Earthquake bracing steel shapes listed in NFPA 13 shall be limited to maximum length indicated. The slenderness ratio shall not exceed 200 in accordance with NFPA.
   2. The Contractor shall submit calculations with shop drawings indicating least radius of gyration and maximum permissible length for each shape.

PART 3 EXECUTION

3.1 GENERAL

A. Product Delivery
   1. Delivery of Materials: Delivery of all materials and equipment to the job site shall be scheduled to assure compliance with the predetermined construction schedules.

2. Storage of Materials, Equipment, and Fixtures: Contractor shall be responsible for storage of materials on job site, including furnishing of any storage facilities or structures required.
3. Handling Materials and Equipment: Contractor shall be responsible for on-site handling of materials and equipment.

B. Clean-up
1. Maintain the premises free from accumulation of waste materials or rubbish caused by this work.
2. At the completion of the work, removed all surplus materials, tools, etc., and leave the premises clean.

C. Leak Protection
1. Damage: Protect all unfinished work to prevent damage and furnish protection of all surrounding areas where necessary.
2. Leak Damage: The Contractor shall be responsible during the installation and testing periods of the fire protection system for any damage to the work of others, to the building or its contents caused by leaks in any equipment, by unplugged or disconnected pipes or fittings, or by overflow, and shall pay for the necessary replacements or repairs to work of others damaged by such leakage.

D. Safety
1. All work shall be performed in compliance with the Occupational Safety and Health Act of 1970 and the Construction Safety Act Standards.
2. Contractor shall attend all job safety meetings.

3.2 FABRICATION

A. Pipe Ends
1. Ream and remove burrs after cutting pipe. Standard wall pipe ends shall be welded, threaded, cut grooved, or plain end.
2. Thin wall pipe ends shall be plain end, welded or roll grooved in accordance with the fitting manufactures' recommendation.
3. Threads shall be in accordance with ASME B1.20.1. Each thread on light wall pipe shall be gauged before the fitting is made-up.

B. Grooved Ends
1. Pipe minimum thickness, squareness, and out-off roundness shall be in accordance with the coupling manufacturers specifications.
2. Pipe surface shall be free of indentations, projections, or roll marks from the end of the pipe to the groove.

C. Welding
1. No field welding of sprinkler piping shall be permitted.
2. Risers, feed mains, cross mains and branch lines may be shop welded using acceptable welding fittings. Welding methods shall comply with all the requirements of AWS B2.1.
3. Certified records shall be maintained upon the completion of each weld, welder shall stamp an imprint of their identification into the side of the pipe adjacent to the weld.

3.3 INSTALLATION

A. General
1. A clean set of prints or shop drawings shall be maintained at the site and marked up to show any changes.
2. Piping shall be installed above ceilings except in areas where there is no ceiling. Install piping in exposed areas as high as possible using necessary fittings and auxiliary drains to maintain maximum clear headroom.

3.4 SPRINKLERS

A. General
1. Sprinklers below ceilings of exposed piping shall be listed and approved natural brass upright type, in upright position. Listed and approved natural brass pendent type may be used where necessary due to clear height requirements, duct interference, etc.
2. Sprig-ups shall be provided wherever necessary to provide proper deflector distances in accordance with NFPA 13 requirements.

B. Sprinkler Guards and Water Shields
   1. Provide guards on sprinklers within 7 feet of finished floor or wherever sprinklers may be subject to mechanical damage.
C. Drains
   1. Provide main drain valves at system control valves, sized in accordance with NFPA 13 and AHJ requirements that extend piping to exterior.
   2. Provide all auxiliary drains where necessary.
   3. Pipe all drains and auxiliary drains to locations where water drained will not damage stock, equipment, vehicles, planted areas, etc., or injure personnel.
   4. Plugs used for auxiliary drains shall be brass.
   5. All piping and fittings downstream of drain valve shall be hot-dipped galvanized.
   6. The contractor shall comply with all water discharge restrictions.

3.5 VALVES

A. General
   1. Valves shall be installed with sufficient clearance for operation, testing, and maintenance.
   2. Where wafer bodied valves are used, they shall be installed so that the discs do not interfere with other components.
B. Control valves shall be installed so that valve position indicator is visible.
C. Drain, test, and trim valves.
   1. Valves shall be installed no more than 7 feet 0 inches above the finished floor and shall be accessible.
D. Pressure Relief Valves.
   1. Pressure relief valves for sprinkler system risers shall be listed/approved, not less than ½-inch in size, set to open at not more than 175 psi.
E. Air Vent
   1. Provide at least one air vent at the high point in each wet-pipe sprinkler system in accordance with NFPA 13 requirements. Connect vent into top of sprinkler piping.

3.6 PRESSURE GAUGES

A. Gauges shall be located where not subject to freezing.
B. Gauges shall be installed vertically, with three-way valve with ¼-inch plugged outlet, and as follows:
   1. Above and below wet system riser check valves.
   2. At each water supply and inlet of floor control valve.

3.7 HANGERS, SUPPORTS, AND EARTHQUAKE BRACING

A. General
   1. All piping must be substantially supported from building structure and only approved types of hangers shall be used. Piping lines under ducts shall not be supported from duct work, but shall be supported from building structure with trapeze hangers where necessary or from steel angles supporting duct work in accordance with NFPA 13.
   2. All thread rods shall not be bent.
   3. Hanger components shall be ferrous.
   4. Powder driven studs shall be specifically listed for use in the required seismic zone.
B. Feed and Cross Mains
   1. Install at least one hanger per length of pipe joined by grooved couplings.
   2. Use flexible couplings where more than two couplings are used per run.
C. Risers
   1. Risers shall be supported at lowest level and alternate levels above using riser clamp.
   2. Install flexible couplings in risers.
D. System Headers
   1. Install pipe saddle supports complete with flange bolted to floor.
E. Earthquake Protection

1. Install flexible joints and sub bracing as required by NFPA 13 section 18.2.

3.8 SLEEVINGS, WALL & FLOOR PENETRATIONS

A. Set Schedule 40 sleeves in place for all pipes passing through openings in fire resistance rated construction when required by UL listing for fire stopping method utilized.
B. Provide clearance between the sprinkler piping and sleeves in accordance with NFPA and/or FM. The space between sleeve and pipe shall be filled with noncombustible, UL listed fire-stopping materials. Provide chrome wall plates at each side of wall.
C. Sleeves through floors shall be watertight. Penetrations through fire rated construction shall be adequately fire stopped to maintain the fire resistance rating required.
D. Where sleeves are not installed, provide clearance around piping penetrations in accordance with NFPA 13. The space between the wall/floor and pipe shall be filled with noncombustible, UL listed fire-stopping materials. Provide chrome wall plates at each side of wall.

3.9 SIGNS

A. Valves
   1. Secure to each valve with corrosion resistant wire or chain, sign stating, “control valve.”
B. Hydraulic Design Information
   1. Secure to each system riser with corrosion resistant fasteners.

3.10 WATER FLOW ALARMS & SUPERVISORY DEVICES

A. Alarm Bells
   1. Install alarm bells in accordance with bell manufacturer’s instructions.
B. Alarm and Supervisory Switches
   1. Install alarm water flow switches in accordance with switch manufacturer’s instructions.
   2. Install and adjust valve supervisory switches in accordance with valve manufacturer’s instructions.

3.11 INSPECTOR’S TEST

A. Provide inspector’s test connections, as specified in NFPA 13, at required points for testing each waterflow alarm device.
B. Provide 1-inch sight glass if inspector’s test discharge cannot be readily observed while operating valve.
C. Pipe all inspector’s test connections discharging to atmosphere to location where water drained will not damage stock, equipment, vehicles, planted areas, etc., or injure personnel.
D. Splash blocks shall be provided where inspector’s test discharge could produce damage to surroundings.
E. All pipe and fittings downstream of inspector’s test valve shall be galvanized.

3.12 SYSTEM ACCEPTANCE

A. Tests
   1. General system test shall be coordinated with the owner’s representatives for training and witnessed by the AHJ. Problems noted during testing such as air or water leaks, difficulty in operating valves, alarm failures, etc. shall be corrected before the Contractor leaves the job.
   2. Hydrostatically test all piping, including fire department connections between the check valve and connection, at 200 psi for two hours. If the highest static pressure at the lowest point in the system exceeds 150 psi, the system shall be tested at 50 psi more than the highest static pressure.
   3. Flow Tests
      a. Main drain shall be opened wide until pressure stabilizes then slowly closed, noting and recording flowing (residual) and static (non-flow) pressure.
B. Valve Operation
   1. Operate each valve through its entire range. Adjust valve packing glands.
      a. Hose valves shall be capped during the test.
   2. Threads for hose valve/wall hydrant outlets and fire department inlets shall be verified to conform to those used by the AHJ.
C. Water Flow and Supervisory Devices

1. Coordinate testing of electric components with the alarm contractor.
2. Each water flow device shall be tested in accordance with NFPA 72 by opening the inspector's test or alarm test valve.
3. Each valve supervisory device shall be tested by operating the valve wheel/crank.
4. Verify all signals have been noted by the fire alarm control panel and each audible alarm device operates.

D. Contractor's material and test certificates shall be completed for each system/floor and signed by the Contractor and witnessed by the owner's representative/AHJ. Provide the NFPA certificate(s) to the owner, local fire official, and architect.

E. Training
1. General – In addition to the tests required in Parts A through C and witnessed by the owner's representative(s), conduct one/two-hour training sessions to familiarize the representatives with all operating features of the system, including control valve, drain and test valve locations and operations.
2. Provide owner's representatives with:
   a. A small-scale plan of the system/building showing locations of control, drain, and test valves.
   b. Component manufacturer's inspection and testing manuals.
   c. Two copies of NFPA 25.
3. Spare Parts
   a. Provide 12 spare sprinklers of all types and ratings that are installed, in a steel cabinet complete with special sprinkler wrenches. Install cabinet as directed by owner.

3.13 EXCAVATION

A. General
1. Perform all excavation, including necessary shoring, and all backfilling required for the completion of work under this contract that is to be installed underground, outside, or within building walls. The arrangement of shoring shall be such as to prevent any movement of the trench banks and consequent strain on the pipes.
2. Place all surplus dirt where directed by the construction manager.

B. Excavation
1. Excavate to the required depth and grade to the bottom of the trench to secure the required slope.
2. Rock or concrete, where encountered, shall be excavated to a minimum depth of 6 inches below bottom of pipe.
3. Where mud, cinders, or otherwise unstable or undesirable soil is encountered in the bottom of the trench, such soil shall be removed to firm bearing and the trench shall be backfilled with sand or bank run gravel to the proper grade and tamped to provide uniform firm support.
4. When water is encountered in the trench work, furnish and operate necessary approved pumping equipment and provide approved drainage facilities to keep excavation free of water.
5. The maximum width of the trench at a point 1 foot above the top of the pipe shall not exceed the nominal size of the pipe, plus 24 inches.

3.14 ADJUSTMENT AND CLEANING

A. Cleaning: Flush all piping in accordance with NFPA Standards for test procedures.

END OF SECTION

SECTION 220513 - COMMON MOTOR REQUIREMENTS FOR PLUMBING EQUIPMENT

PART 1 GENERAL

1.1 SUMMARY

A. Section includes general requirements for single-phase motors.

1.2 COORDINATION

A. Coordinate features of motors, installed units, and accessory devices to be compatible with the following:
   1. Motor controllers.
   2. Torque, speed, and horsepower requirements of the load.
   3. Ratings and characteristics of supply circuit and required control sequence.
   4. Ambient and environmental conditions of installation location.

PART 2 PRODUCTS

2.1 GENERAL MOTOR REQUIREMENTS

A. Comply with NEMA MG 1 unless otherwise indicated.
B. Comply with IEEE 841 for severe-duty motors.

2.2 MOTOR CHARACTERISTICS

A. Duty: Continuous duty at ambient temperature of 40 deg C and at altitude of 3300 feet above sea level.
B. Capacity and Torque Characteristics: Sufficient to start, accelerate, and operate connected loads at designated speeds, at installed altitude and environment, with indicated operating sequence, and without exceeding nameplate ratings or considering service factor.

2.3 SINGLE-PHASE MOTORS

A. Motors larger than 1/20 hp shall be one of the following, to suit starting torque and requirements of specific motor application:
   1. Permanent-split capacitor.
   2. Split phase.
   3. Capacitor start, inductor run.
   4. Capacitor start, capacitor run.
B. Multispeed Motors: Variable-torque, permanent-split-capacitor type.
C. Bearings: Prelubricated, antifriction ball bearings or sleeve bearings suitable for radial and thrust loading.
D. Motors 1/20 HP and Smaller: Shaded-pole type.
E. Thermal Protection: Internal protection to automatically open power supply circuit to motor when winding temperature exceeds a safe value calibrated to temperature rating of motor insulation. Thermal-protection device shall automatically reset when motor temperature returns to normal range.

PART 3 EXECUTION (NOT APPLICABLE)

END OF SECTION

SECTION 220517 - SLEEVES AND SLEEVE SEALS FOR PLUMBING PIPING

PART 1 GENERAL

1.1 SUMMARY

A. Section Includes:
1. Sleeves.
2. Stack-sleeve fittings.
3. Sleeve-seal fittings.
4. Grout.

1.2 ACTION SUBMITTALS

A. Product Data: For each type of product indicated.

PART 2 PRODUCTS

2.1 SLEEVES

A. Cast-Iron Wall Pipes: Cast or fabricated of cast or ductile iron and equivalent to ductile-iron pressure pipe, with plain ends and integral waterstop unless otherwise indicated.
B. PVC-Pipe Sleeves: ASTM D 1785, Schedule 40.

2.2 STACK-SLEEVE FITTINGS

A. Manufacturers: Subject to compliance with requirements, provide products by one of the following:
1. Jay R. Smith Mfg. Co.
2. Zurn Industries, LLC.
B. Description: Manufactured, cast-iron sleeve with integral clamping flange. Include clamping ring, bolts, and nuts for membrane flashing.
1. Underdeck Clamp: Clamping ring with setscrews.

2.3 SLEEVE-SEAL FITTINGS

A. Manufacturers: Subject to compliance with requirements, provide products by one of the following:
1. Advance Products & Systems, Inc.
2. Metraflex Company (The).
B. Description: Manufactured plastic, sleeve-type, waterstop assembly made for imbedding in concrete slab or wall. Unit has plastic or rubber waterstop collar with center opening to match piping OD.

2.4 GROUT

A. Standard: ASTM C 1107/C 1107M, Grade B, post-hardening and volume-adjusting, dry, hydraulic-cement grout.
B. Characteristics: Nonshrink; recommended for interior and exterior applications.
C. Design Mix: 5000-psi, 28-day compressive strength.
D. Packaging: Premixed and factory packaged.

PART 3 EXECUTION

3.1 SLEEVE INSTALLATION

A. Install sleeves for piping passing through penetrations in floors, partitions, roofs, and walls.

B. For sleeves that will have sleeve-seal system installed, select sleeves of size large enough to provide 1-inch annular clear space between piping and concrete slabs and walls.
   1. Sleeves are not required for core-drilled holes.
C. Install sleeves in concrete floors, concrete roof slabs, and concrete walls as new slabs and walls are constructed.
   1. Permanent sleeves are not required for holes in slabs formed by molded-PE or -PP sleeves.
   2. Cut sleeves to length for mounting flush with both surfaces.
      a. Exception: Extend sleeves installed in floors of mechanical equipment areas or other wet areas 2 inches] above finished floor level.
   3. Using grout, seal the space outside of sleeves in slabs and walls without sleeve-seal system.
D. Install sleeves for pipes passing through interior partitions.
   1. Cut sleeves to length for mounting flush with both surfaces.
   2. Install sleeves that are large enough to provide 1/4-inch annular clear space between sleeve and pipe or pipe insulation.
   3. Seal annular space between sleeve and piping or piping insulation; use joint sealants appropriate for size, depth, and location of joint. Comply with requirements for sealants specified in Section 079200 "Joint Sealants."
E. Fire-Barrier Penetrations: Maintain indicated fire rating of walls, partitions, ceilings, and floors at pipe penetrations. Seal pipe penetrations with firestop materials. Comply with requirements for firestopping specified in Section 078413 "Penetration Firestopping."

3.2 STACK-SLEEVE-FITTING INSTALLATION

A. Install stack-sleeve fittings in new slabs as slabs are constructed.
   1. Install fittings that are large enough to provide 1/4-inch annular clear space between sleeve and pipe or pipe insulation.
   2. Secure flashing between clamping flanges for pipes penetrating floors with membrane waterproofing. Comply with requirements for flashing specified in Section 076200 "Sheet Metal Flashing and Trim."
   3. Install section of cast-iron soil pipe to extend sleeve to 2 inches above finished floor level.
   4. Extend cast-iron sleeve fittings below floor slab as required to secure clamping ring if ring is specified.
   5. Using grout, seal the space around outside of stack-sleeve fittings.
B. Fire-Barrier Penetrations: Maintain indicated fire rating of floors at pipe penetrations. Seal pipe penetrations with firestop materials. Comply with requirements for firestopping specified in Section 078413 "Penetration Firestopping."

3.3 SLEEVE-SEAL-FITTING INSTALLATION

A. Install sleeve-seal fittings in new walls and slabs as they are constructed.
B. Assemble fitting components of length to be flush with both surfaces of concrete slabs and walls. Position waterstop flange to be centered in concrete slab or wall.
C. Secure nailing flanges to concrete forms.
D. Using grout, seal the space around outside of sleeve-seal fittings.

3.4 SLEEVE AND SLEEVE-SEAL SCHEDULE

A. Use sleeves and sleeve seals for the following piping-penetration applications:
   1. Exterior Concrete Walls above Grade:
      a. Piping Smaller Than NPS 6: Galvanized-steel-pipe sleeves.
   2. Exterior Concrete Walls below Grade:
      a. Piping Smaller Than NPS 6: Galvanized-steel-pipe sleeves with sleeve-seal system.
         1) Select sleeve size to allow for 1-inch annular clear space between piping and sleeve for installing sleeve-seal system.
   3. Concrete Slabs-on-Grade:
      a. Piping Smaller Than NPS 6: Galvanized-steel-pipe sleeves with sleeve-seal system.

1) Select sleeve size to allow for 1-inch annular clear space between piping and sleeve for installing sleeve-seal system.

4. Concrete Slabs above Grade:
   a. Piping Smaller Than NPS 6: Galvanized-steel-pipe sleeves PVC-pipe sleeves.
5. Interior Partitions:
   a. Piping Smaller Than NPS 6: Galvanized-steel-pipe sleeves PVC-pipe sleeves.

END OF SECTION

SECTION 220518 - ESCUTCHEONS FOR PLUMBING PIPING

PART 1 GENERAL

1.1 SUMMARY

A. Section Includes:
   1. Escutcheons.

1.2 ACTION SUBMITTALS

A. Product Data: For each type of product indicated.

PART 2 PRODUCTS

2.1 ESCUTCHEONS

A. One-Piece, Cast-Brass Type: With polished, chrome-plated finish and setscrew fastener.
B. One-Piece, Deep-Pattern Type: Deep-drawn, box-shaped brass with chrome-plated finish and spring-clip fasteners.
C. One-Piece, Stamped-Steel Type: With chrome-plated finish and spring-clip fasteners.
D. Split-Casting Brass Type: With polished, chrome-plated finish and with concealed hinge and setscrew.

PART 3 EXECUTION

3.1 INSTALLATION

A. Install escutcheons for piping penetrations of walls, ceilings, and finished floors.
B. Install escutcheons with ID to closely fit around pipe, tube, and insulation of insulated piping and with OD that completely covers opening.
   1. Escutcheons for New Piping:
      a. Piping with Fitting or Sleeve Protruding from Wall: One-piece, deep-pattern type.
      b. Chrome-Plated Piping: One-piece, cast-brass type with polished, chrome-plated finish.
      c. Insulated Piping: One-piece, stamped-steel type.
      d. Bare Piping at Wall and Floor Penetrations in Finished Spaces: One-piece, cast-brass type with polished, chrome-plated finish.
      e. Bare Piping at Wall and Floor Penetrations in Finished Spaces: One-piece, stamped-steel type or split-plate, stamped-steel type with concealed hinge.
      f. Bare Piping at Ceiling Penetrations in Finished Spaces: One-piece, cast-brass or split-casting brass type with polished, chrome-plated finish.
      g. Bare Piping in Unfinished Service Spaces: One-piece, cast-brass or split-casting brass type with rough-brass finish.
      h. Bare Piping in Unfinished Service Spaces: One-piece, stamped-steel type or split-plate, stamped-steel type with concealed hinge.
      i. Bare Piping in Equipment Rooms: One-piece, cast-brass or split-casting brass type with rough-brass finish.
   2. Escutcheons for Existing Piping:
      a. Chrome-Plated Piping: Split-casting brass type with polished, chrome-plated finish.
      b. Insulated Piping: Split-plate, stamped-steel type with concealed or exposed-rivet hinge.
      c. Bare Piping at Wall and Floor Penetrations in Finished Spaces: Split-casting brass type with polished, chrome-plated finish.
      d. Bare Piping at Wall and Floor Penetrations in Finished Spaces: Split-plate, stamped-steel type with concealed or exposed-rivet hinge.

e. Bare Piping at Ceiling Penetrations in Finished Spaces: Split-casting brass type with polished, chrome-plated finish.

f. Bare Piping in Unfinished Service Spaces: Split-casting brass type with rough-brass finish.

g. Bare Piping in Unfinished Service Spaces: Split-plate, stamped-steel type with concealed or exposed-rivet hinge.

h. Bare Piping in Equipment Rooms: Split-casting brass type with rough-brass finish.

3.2 FIELD QUALITY CONTROL

A. Replace broken and damaged escutcheons using new materials.

END OF SECTION

SECTION 220519 - METERS AND GAGES FOR PLUMBING PIPING

PART 1 GENERAL

1.1 RELATED DOCUMENTS

A. Drawings and general provisions of the Contract, including General and Supplementary Conditions and Division 01 Specification Sections, apply to this Section.

1.2 SUMMARY

A. Section Includes:
1. Bimetallic-actuated thermometers.
2. Filled-system thermometers.
3. Liquid-in-glass thermometers.
4. Light-activated thermometers.
5. Thermowells.
6. Dial-type pressure gages.
7. Gage attachments.
8. Test plugs.
9. Test-plug kits.
10. Sight flow indicators.

B. Related Requirements:
1. Section 221113 "Facility Water Distribution Piping" for domestic water meters and combined domestic and fire-protection water-service meters outside the building.
2. Section 221119 "Domestic Water Piping Specialties" for water meters.
3. Section 221513 "General-Service Compressed-Air Piping" for compressed air gages.

1.3 ACTION SUBMITTALS

A. Product Data: For each type of product.

1.4 INFORMATIONAL SUBMITTALS

A. Product Certificates: For each type of meter and gage.

1.5 CLOSEOUT SUBMITTALS

A. Operation and Maintenance Data: For meters and gages to include in operation and maintenance manuals.

PART 2 PRODUCTS

2.1 BIMETALLIC-ACTUATED THERMOMETERS

A. Standard: ASME B40.200.
B. Case: Liquid-filled type(s); stainless steel with 5-inch nominal diameter.
C. Dial: Nonreflective aluminum with permanently etched scale markings and scales in deg F.
D. Connector Type(s): Union joint, adjustable angle with unified-inch screw threads.
E. Connector Size: 1/2 inch , with ASME B1.1 screw threads.
F. Stem: 0.25 or 0.375 inch (6.4 or 9.4 mm) in diameter; stainless steel.
G. Window: Plain glass.
H. Ring: Stainless steel.
I. Element: Bimetal coil.

J. Pointer: Dark-colored metal.
K. Accuracy: Plus or minus 1 percent of scale range.

2.2 FILLED-SYSTEM THERMOMETERS

A. Direct-Mounted, Metal-Case, Vapor-Actuated Thermometers:
1. Standard: ASME B40.200.
2. Case: Sealed type, cast aluminum or drawn steel 5-inch nominal diameter.
3. Element: Bourdon tube or other type of pressure element.
4. Movement: Mechanical, with link to pressure element and connection to pointer.
5. Dial: Nonreflective aluminum with permanently etched scale markings graduated in deg F.
6. Pointer: Dark-colored metal.
7. Window: Glass.
8. Ring: Metal.
9. Connector Type(s): Union joint, adjustable, 180 degrees in vertical plane, 360 degrees in horizontal plane, with locking device; with ASME B1.1 screw threads.
10. Thermal System: Liquid-filled bulb in copper-plated steel, aluminum, or brass stem and of length to suit installation.
a. Design for Thermowell Installation: Bare stem.
11. Accuracy: Plus or minus 1 percent of scale range.

B. Direct-Mounted, Plastic-Case, Vapor-Actuated Thermometers:
1. Standard: ASME B40.200.
2. Case: Sealed type, plastic 5-inch nominal diameter.
3. Element: Bourdon tube or other type of pressure element.
4. Movement: Mechanical, with link to pressure element and connection to pointer.
5. Dial: Nonreflective aluminum with permanently etched scale markings graduated in deg F.
6. Pointer: Dark-colored metal.
7. Window: Glass.
8. Ring: Metal.
9. Connector Type(s): Union joint, adjustable, 180 degrees in vertical plane, 360 degrees in horizontal plane, with locking device; with ASME B1.1 screw threads.
10. Thermal System: Liquid-filled bulb in copper-plated steel, aluminum, or brass stem and of length to suit installation.
a. Design for Thermowell Installation: Bare stem.
11. Accuracy: Plus or minus 1 percent of scale range.

C. Remote-Mounted, Metal-Case, Vapor-Actuated Thermometers:
1. Standard: ASME B40.200.
2. Case: Sealed type, cast aluminum or drawn steel 6-inch nominal diameter with back flange and holes for panel mounting.
3. Element: Bourdon tube or other type of pressure element.
4. Movement: Mechanical, with link to pressure element and connection to pointer.
5. Dial: Nonreflective aluminum with permanently etched scale markings graduated in deg F.
6. Pointer: Dark-colored metal.
7. Window: Glass.
8. Ring: Metal.
9. Connector Type(s): Union joint, back with ASME B1.1 screw threads.
10. Thermal System: Liquid-filled bulb in copper-plated steel, aluminum, or brass stem and of length to suit installation.
a. Design for Thermowell Installation: Bare stem.
11. Accuracy: Plus or minus 1 percent of scale range.

2.3 LIQUID-IN-GLASS THERMOMETERS

A. Metal-Case, Compact-Style, Liquid-in-Glass Thermometers:
1. Standard: ASME B40.200.

2. Case: Cast aluminum 6-inch nominal size.
3. Case Form: Back angle unless otherwise indicated.
4. Tube: Glass with magnifying lens and blue organic liquid.
5. Tube Background: Nonreflective aluminum with permanently etched scale markings graduated in deg F.
6. Window: Glass or plastic.
7. Stem: Aluminum or brass and of length to suit installation.
   a. Design for Thermowell Installation: Bare stem.
8. Connector: 3/4 inch, with ASME B1.1 screw threads.
9. Accuracy: Plus or minus 1 percent of scale range or one scale division, to a maximum of 1.5 percent of scale range.

B. Metal-Case, Industrial-Style, Liquid-in-Glass Thermometers:
1. Standard: ASME B40.200.
2. Case: Cast aluminum; 7-inch nominal size unless otherwise indicated.
3. Case Form: Adjustable angle unless otherwise indicated.
4. Tube: Glass with magnifying lens and blue organic liquid.
5. Tube Background: Nonreflective aluminum with permanently etched scale markings graduated in deg F .
6. Window: Glass???.
7. Stem: Aluminum and of length to suit installation.
   a. Design for Thermowell Installation: Bare stem.
8. Connector: 1-1/4 inches, with ASME B1.1 screw threads.
9. Accuracy: Plus or minus 1 percent of scale range or one scale division, to a maximum of 1.5 percent of scale range.

2.4 THERMOWELLS

A. Thermowells:
1. Standard: ASME B40.200.
2. Description: Pressure-tight, socket-type fitting made for insertion into piping tee fitting.
3. Material for Use with Copper Tubing: CNR.
4. Material for Use with Steel Piping: CRES.
5. Type: Stepped shank unless straight or tapered shank is indicated.
6. External Threads: NPS 1/2, NPS 3/4, or NPS 1, ASME B1.20.1 pipe threads.
7. Internal Threads: 1/2, 3/4, and 1 inch, with ASME B1.1 screw threads.
8. Bore: Diameter required to match thermometer bulb or stem.
9. Insertion Length: Length required to match thermometer bulb or stem.
10. Lagging Extension: Include on thermowells for insulated piping and tubing.
11. Bushings: For converting size of thermowell's internal screw thread to size of thermometer connection.

B. Heat-Transfer Medium: Mixture of graphite and glycerin

2.5 PRESSURE GAGES

A. Direct-Mounted, Metal-Case, Dial-Type Pressure Gages:
1. Standard: ASME B40.100.
2. Case: Liquid-filled type(s); cast aluminum or drawn steel; 6-inch nominal diameter.
3. Pressure-Element Assembly: Bourdon tube unless otherwise indicated.
4. Pressure Connection: Brass, with NPS 1/4 or NPS 1/2, ASME B1.20.1 pipe threads and bottom-outlet type unless back-outlet type is indicated.
5. Movement: Mechanical, with link to pressure element and connection to pointer.
6. Dial: Nonreflective aluminum with permanently etched scale markings graduated in psi.
7. Pointer: Dark-colored metal.
8. Window: Glass.
9. Ring: Metal.

10. Accuracy: Grade A, plus or minus 1 percent of middle half of scale range.

2.6 GAGE ATTACHMENTS

A. Snubbers: ASME B40.100, brass; with NPS 1/4 or NPS 1/2, ASME B1.20.1 pipe threads and piston-type surge-dampening device. Include extension for use on insulated piping.
B. Valves: Brass ball, with NPS 1/4 or NPS 1/2], ASME B1.20.1 pipe threads.

2.7 TEST PLUGS

A. Description: Test-station fitting made for insertion into piping tee fitting.
B. Body: Brass or stainless steel with core inserts and gasketed and threaded cap. Include extended stem on units to be installed in insulated piping.
C. Thread Size: NPS 1/2, ASME B1.20.1 pipe thread.
D. Minimum Pressure and Temperature Rating: 500 psig at 200 deg F.
E. Core Inserts: EPDM self-sealing rubber.

2.8 TEST-PLUG KITS

A. Furnish one test-plug kit(s) containing one thermometer(s), one pressure gage and adapter, and carrying case. Thermometer sensing elements, pressure gage, and adapter probes shall be of diameter to fit test plugs and of length to project into piping.
B. Low-Range Thermometer: Small, bimetallic insertion type with 1- to 2-inch-diameter dial and tapered-end sensing element. Dial range shall be at least 25 to 125 deg F.
C. High-Range Thermometer: Small, bimetallic insertion type with 1- to 2-inch-diameter dial and tapered-end sensing element. Dial range shall be at least 0 to 220 deg F.
D. Pressure Gage: Small, Bourdon-tube insertion type with 2- to 3-inch-diameter dial and probe. Dial range shall be at least 0 to 200 psig.
E. Carrying Case: Metal or plastic, with formed instrument padding.

2.9 SIGHT FLOW INDICATORS

A. Description: Piping inline-installation device for visual verification of flow.
B. Construction: Bronze or stainless-steel body, with sight glass and paddle wheel indicator, and threaded or flanged ends.
C. Minimum Pressure Rating: 150 psig
D. Minimum Temperature Rating: 200 deg F.
E. End Connections for NPS 2 and Smaller: Threaded.
F. End Connections for NPS 2-1/2 and Larger: Flanged.

PART 3 EXECUTION

3.1 INSTALLATION

A. Install thermowells with socket extending one-third of pipe diameter and in vertical position in piping tees.
B. Install thermowells of sizes required to match thermometer connectors. Include bushings if required to match sizes.
C. Install thermowells with extension on insulated piping.
D. Fill thermowells with heat-transfer medium.
E. Install direct-mounted thermometers in thermowells and adjust vertical and tilted positions.
F. Install remote-mounted thermometer bulbs in thermowells and install cases on panels; connect cases with tubing and support tubing to prevent kinks. Use minimum tubing length.
G. Install direct-mounted pressure gages in piping tees with pressure gage located on pipe at the most readable position.
H. Install remote-mounted pressure gages on panel.
I. Install valve and snubber in piping for each pressure gage for fluids.

J. Install test plugs in piping tees.
K. Install thermometers in the following locations:
   1. Inlet and outlet of each water heater.
   2. Inlets and outlets of each domestic water heat exchanger.
   3. Inlet and outlet of each domestic hot-water storage tank.
   4. Inlet and outlet of each remote domestic water chiller.
L. Install pressure gages in the following locations:
   1. Building water service entrance into building.
   2. Inlet and outlet of each pressure-reducing valve.
   3. Suction and discharge of each domestic water pump.

3.2 CONNECTIONS

A. Install meters and gages adjacent to machines and equipment to allow service and maintenance of meters, gages, machines, and equipment.

3.3 ADJUSTING

A. Adjust faces of meters and gages to proper angle for best visibility.

3.4 THERMOMETER SCHEDULE

A. Thermometers at inlet and outlet of each domestic water heater shall be the following:
   1. Metal case,industrial-style, liquid-in-glass type.
B. Thermometers at inlets and outlets of each domestic water heat exchanger shall be the following:
   1. Metal case, industrial-style, liquid-in-glass type.
C. Thermometers at inlet and outlet of each domestic hot-water storage tank shall be the following:
   1. Metal case, industrial-style, liquid-in-glass type.
D. Thermometers at inlet and outlet of each remote domestic water chiller shall be the following:
   1. Metal case, industrial-style, liquid-in-glass type.
E. Thermometer stems shall be of length to match thermowell insertion length.

3.5 THERMOMETER SCALE-RANGE SCHEDULE

A. Scale Range for Domestic Cold-Water Piping: 0 to 100 deg F
B. Scale Range for Domestic Hot-Water Piping: 0 to 250 deg F.
C. Scale Range for Domestic Cooled-Water Piping: 0 to 150 deg F

3.6 PRESSURE-GAGE SCHEDULE

A. Pressure gages at discharge of each water service into building shall be the following:
   1. Liquid-filled direct-mounted, metal case.
B. Pressure gages at inlet and outlet of each water pressure-reducing valve shall be the following:
   1. Liquid-filled direct-mounted, metal case.
C. Pressure gages at suction and discharge of each domestic water pump shall be the following:
   1. Liquid-filled direct-mounted, metal case.

3.7 PRESSURE-GAGE SCALE-RANGE SCHEDULE

A. Scale Range for Water Service Piping: 0 to 200 psi
B. Scale Range for Domestic Water Piping: 0 to 100 psi.

END OF SECTION 220519

SECTION 220523.12 - BALL VALVES FOR PLUMBING PIPING

PART 1 GENERAL

1.1 SUMMARY

A. Section Includes:
1. Brass ball valves.
2. Bronze ball valves.

1.2 DEFINITIONS

A. CWP: Cold working pressure.

1.3 ACTION SUBMITTALS

A. Product Data: For each type of valve.
1. Certification that products comply with NSF 61 Annex G.

1.4 DELIVERY, STORAGE, AND HANDLING

A. Prepare valves for shipping as follows:
1. Protect internal parts against rust and corrosion.
2. Protect threads, flange faces, and soldered ends.
3. Set ball valves open to minimize exposure of functional surfaces.
B. Use the following precautions during storage:
1. Maintain valve end protection.
2. Store valves indoors and maintain at higher-than-ambient-dew-point temperature. If outdoor storage is necessary, store valves off the ground in watertight enclosures.

PART 2 PRODUCTS

2.1 GENERAL REQUIREMENTS FOR VALVES

A. Source Limitations for Valves: Obtain each type of valve from single source from single manufacturer.
B. ASME Compliance:
1. ASME B1.20.1 for threads for threaded end valves.
2. ASME B16.10 and ASME B16.34 for ferrous valve dimensions and design criteria.
3. ASME B16.18 for solder-joint connections.
4. ASME B31.9 for building services piping valves.
C. NSF Compliance: NSF 61 Annex G for valve materials for potable-water service.
D. Bronze valves shall be made with dezincification-resistant materials. Bronze valves made with copper alloy (brass) containing more than 15 percent zinc are not permitted.
E. Valve Pressure-Temperature Ratings: Not less than indicated and as required for system pressures and temperatures.
F. Valve Sizes: Same as upstream piping unless otherwise indicated.
G. Valves in Insulated Piping:
1. Include 2-inch stem extensions.
2. Extended operating handles of nonthermal-conductive material and protective sleeves that allow operation of valves without breaking vapor seals or disturbing insulation.
3. Memory stops that are fully adjustable after insulation is applied.

2.2 BRASS BALL VALVES

A. Two-Piece, Brass Ball Valves with Full Port and Brass Trim:
   1. Manufacturers: Subject to compliance with requirements, provide products by one of the following:
      a. Apollo Flow Controls; Conbraco Industries, Inc.
      b. Milwaukee Valve Company.
      c. NIBCO INC.
   2. Description:
      a. Standard: MSS SP-110.
      b. CWP Rating: Body Design: Two piece.
      c. Body Material: Forged brass.
      d. Ends: Threaded and soldered.
      e. Seats: PTFE.
      f. Stem: Brass.
      g. Ball: Chrome-plated brass.
      h. Port: Full.
B. Two-Piece, Brass Ball Valves with Full Port and Stainless-Steel Trim:
   1. Manufacturers: Subject to compliance with requirements, provide products by one of the following:
      a. Apollo Flow Controls; Conbraco Industries, Inc.
      b. Milwaukee Valve Company.
      c. NIBCO INC.
   2. Description:
      a. Standard: MSS SP-110.
      b. CWP Rating: Body Design: Two piece.
      c. Body Material: Forged brass.
      d. Ends: Threaded and soldered.
      e. Seats: PTFE.
      f. Stem: Stainless steel.
      g. Ball: Stainless steel, vented.
      h. Port: Full.
C. Two-Piece, Brass Ball Valves with Regular Port and Brass Trim:
   1. Manufacturers: Subject to compliance with requirements, provide products by one of the following:
      a. Apollo Flow Controls; Conbraco Industries, Inc.
      b. NIBCO INC.
      c. WATTS.
   2. Description:
      a. Standard: MSS SP-110.
      b. CWP Rating:
      c. Body Design: Two piece.
      d. Body Material: Forged brass.
      e. Ends: Threaded and soldered.
      f. Seats: PTFE.
      g. Stem: Brass.
      h. Ball: Chrome-plated brass.
      i. Port: Regular.

2.3 BRONZE BALL VALVES

A. One-Piece, Bronze Ball Valves with Bronze Trim:
   1. Manufacturers: Subject to compliance with requirements, provide products by one of the following:
      a. Apollo Flow Controls; Conbraco Industries, Inc.
      b. NIBCO INC.
      c. WATTS.

2. Description:
    a. Standard: MSS SP-110.
    b. CWP Rating:
    c. Body Design: One piece.
    d. Body Material: Bronze.
    e. Ends: Threaded.
    f. Seats: PTFE.
    g. Stem: Bronze.
    h. Ball: Chrome-plated brass.
    i. Port: Reduced.

B. One-Piece, Bronze Ball Valves with Stainless-Steel Trim:
1. Manufacturers: Subject to compliance with requirements, provide products by one of the following:
    a. Apollo Flow Controls; Conbraco Industries, Inc.
    b. NIBCO INC.
    c. WATTS.
2. Description:
    a. Standard: MSS SP-110.
    b. CWP Rating: Body Design: One piece.
    c. Body Material: Bronze.
    d. Ends: Threaded.
    e. Seats: PTFE.
    f. Stem: Stainless steel.
    g. Ball: Stainless steel, vented.
    h. Port: Reduced.

C. Two-Piece, Bronze Ball Valves with Full Port, and Bronze or Brass Trim:
1. Manufacturers: Subject to compliance with requirements, provide products by one of the following:
    a. Apollo Flow Controls; Conbraco Industries, Inc.
    b. NIBCO INC.
    c. WATTS.
2. Description:
    a. Standard: MSS SP-110.
    b. CWP Rating:
    c. Body Design: Two piece.
    d. Body Material: Bronze.
    e. Ends: Threaded and soldered.
    f. Seats: PTFE.
    g. Stem: Bronze or brass.
    h. Ball: Chrome-plated brass.
    i. Port: Full.

D. Two-Piece, Bronze Ball Valves with Full Port and Stainless-Steel Trim:
1. Manufacturers: Subject to compliance with requirements, provide products by one of the following:
    a. Apollo Flow Controls; Conbraco Industries, Inc.
    b. NIBCO INC.
    c. WATTS.
2. Description:
    a. Standard: MSS SP-110.
    b. CWP Rating:
    c. Body Design: Two piece.
    d. Body Material: Bronze.
    e. Ends: Threaded or soldered.
    f. Seats: PTFE.
    g. Stem: Stainless steel.

h. Ball: Stainless steel, vented.
i. Port: Full.

E. Two-Piece, Bronze Ball Valves with Regular Port and Bronze or Brass Trim:
1. Manufacturers: Subject to compliance with requirements, provide products by one of the following:
a. Apollo Flow Controls; Conbraco Industries, Inc.
b. NIBCO INC.
c. WATTS.
2. Description:
a. Standard: MSS SP-110.
b. CWP Rating: 600 psig.
c. Body Design: Two piece.
d. Body Material: Bronze.
e. Ends: Threaded.
f. Seats: PTFE.
g. Stem: Bronze or brass.
h. Ball: Chrome-plated brass.
i. Port: Regular.

F. Two-Piece, Bronze Ball Valves with Regular Port and Stainless-Steel Trim:
1. Manufacturers: Subject to compliance with requirements, provide products by one of the following:
a. Apollo Flow Controls; Conbraco Industries, Inc.
b. NIBCO INC.
c. WATTS.
2. Description:
a. Standard: MSS SP-110.
b. CWP Rating: Body Design: Two piece.
c. Body Material: Bronze.
d. Ends: Threaded.
e. Seats: PTFE.
f. Stem: Stainless steel.
g. Ball: Stainless steel, vented.
h. Port: Regular.

PART 3 EXECUTION

3.1 EXAMINATION

A. Examine valve interior for cleanliness, freedom from foreign matter, and corrosion. Remove special packing materials, such as blocks, used to prevent disc movement during shipping and handling.
B. Operate valves in positions from fully open to fully closed. Examine guides and seats made accessible by such operations.
C. Examine threads on valve and mating pipe for form and cleanliness.
D. Examine mating flange faces for conditions that might cause leakage. Check bolting for proper size, length, and material. Verify that gasket is of proper size, that its material composition is suitable for service, and that it is free from defects and damage.
E. Do not attempt to repair defective valves; replace with new valves.

3.2 VALVE INSTALLATION

A. Install valves with unions or flanges at each piece of equipment arranged to allow service, maintenance, and equipment removal without system shutdown.
B. Locate valves for easy access and provide separate support where necessary.
C. Install valves in horizontal piping with stem at or above center of pipe.
D. Install valves in position to allow full stem movement.

E. Install valve tags. Comply with requirements in Section 220553 "Identification for Plumbing Piping and Equipment" for valve tags and schedules.

3.3 GENERAL REQUIREMENTS FOR VALVE APPLICATIONS

A. If valves with specified CWP ratings are unavailable, the same types of valves with higher CWP ratings may be substituted.

B. Select valves with the following end connections:

1. For Copper Tubing, NPS 2 and Smaller: Threaded ends except where solder-joint valve-end option is indicated in valve schedules below.
2. For Copper Tubing, NPS 2-1/2 to NPS 4: Flanged ends except where threaded valve-end option is indicated in valve schedules below.
3. For Steel Piping, NPS 2 and Smaller: Threaded ends.
4. For Steel Piping, NPS 2-1/2 to NPS 4: Flanged ends except where threaded valve-end option is indicated in valve schedules below.

3.4 LOW-PRESSURE, COMPRESSED-AIR VALVE SCHEDULE (150 PSIG OR LESS)

A. Pipe NPS 2 and Smaller:

1. Bronze Valves: May be provided with solder-joint ends instead of threaded ends.
2. One piece, brass ball valve.
3. One piece, bronze ball valve with bronze trim.
4. Two-piece, brass ball valves with full port and trim.
5. Two-piece, bronze ball valves with full port and trim.
6. Two-piece, bronze ball valves with regular port and trim.

B. Pipe NPS 2-1/2 and Larger:

1. Steel and Iron Valves, NPS 2-1/2 to NPS 4: May be provided with threaded ends instead of flanged ends.
2. Class 150, steel ball valves with full port.
3. Class 150, iron ball valves.

3.5 DOMESTIC HOT- AND COLD-WATER VALVE SCHEDULE

A. Pipe NPS 2 and Smaller:

1. Bronze and Brass Valves: May be provided with solder-joint ends instead of threaded ends.
2. One piece, brass ball valve.
3. One piece, bronze ball valve with bronze trim.
4. Two-piece, brass ball valves with full port and trim.
5. Two-piece, bronze ball valves with full port and trim.
6. Two-piece, bronze ball valves with regular port and bronze trim.

B. Pipe NPS 2-1/2 and Larger:

1. Steel and Iron Valves, NPS 2-1/2 to NPS 4: May be provided with threaded ends instead of flanged ends.

END OF SECTION

SECTION 220523.14 - CHECK VALVES FOR PLUMBING PIPING

PART 1 GENERAL

1.1 SUMMARY

A. Section Includes:
1. Bronze swing check valves.

1.2 DEFINITIONS

A. CWP: Cold working pressure.
B. EPDM: Ethylene propylene-diene terpolymer rubber.
C. NBR: Acrylonitrile-butadiene, Buna-N, or nitrile rubber.

1.3 ACTION SUBMITTALS

A. Product Data: For each type of valve.
1. Certification that products comply with NSF 61 Annex G.

1.4 DELIVERY, STORAGE, AND HANDLING

A. Prepare valves for shipping as follows:
1. Protect internal parts against rust and corrosion.
2. Protect threads, flange faces, grooves, and weld ends.
3. Set check valves in either closed or open position.
B. Use the following precautions during storage:
1. Maintain valve end protection.
2. Store valves indoors and maintain at higher-than-ambient-dew-point temperature. If outdoor storage is necessary, store valves off the ground in watertight enclosures.

PART 2 PRODUCTS

2.1 GENERAL REQUIREMENTS FOR VALVES

A. Source Limitations for Valves: Obtain each type of valve from single source from single manufacturer.
B. ASME Compliance:
1. ASME B1.20.1 for threads for threaded end valves.
2. ASME B16.1 for flanges on iron valves.
3. ASME B16.10 and ASME B16.34 for ferrous valve dimensions and design criteria.
4. ASME B16.18 for solder joint.
5. ASME B31.9 for building services piping valves.
C. NSF Compliance: NSF 61 Annex G for valve materials for potable-water service.
D. Bronze valves shall be made with dezincification-resistant materials. Bronze valves made with copper alloy (brass) containing more than 15 percent zinc are not permitted.
E. Valve Pressure-Temperature Ratings: Not less than indicated and as required for system pressures and temperatures.
F. Valve Sizes: Same as upstream piping unless otherwise indicated.
G. Valve Bypass and Drain Connections: MSS SP-45.

2.2 BRONZE SWING CHECK VALVES

A. Class 125, Bronze, Swing Check Valves with Bronze Disc:
1. Manufacturers: Subject to compliance with requirements, provide products by one of the following:

a. Apollo Flow Controls; Conbraco Industries, Inc.
b. Hammond Valve.
c. NIBCO INC.

2. Description:
a. Standard: MSS SP-80, Type 3.
b. CWP Rating: 200 psig.
c. Body Design: Horizontal flow.
d. Body Material: ASTM B 62, bronze.
e. Ends: Threaded or soldered. See valve schedule articles.
f. Disc: Bronze.

PART EXECUTION

3.1 EXAMINATION

A. Examine valve interior for cleanliness, freedom from foreign matter, and corrosion. Remove special packing materials, such as blocks, used to prevent disc movement during shipping and handling.
B. Operate valves in positions from fully open to fully closed. Examine guides and seats made accessible by such operations.
C. Examine threads on valve and mating pipe for form and cleanliness.
D. Examine mating flange faces for conditions that might cause leakage. Check bolting for proper size, length, and material. Verify that gasket is of proper size, that its material composition is suitable for service, and that it is free from defects and damage.
E. Do not attempt to repair defective valves; replace with new valves.

3.2 VALVE INSTALLATION

A. Install valves with unions or flanges at each piece of equipment arranged to allow service, maintenance, and equipment removal without system shutdown.
B. Locate valves for easy access and provide separate support where necessary.
C. Install valves in horizontal piping with stem at or above center of pipe.
D. Install valves in position to allow full stem movement.
E. Install check valves for proper direction of flow and as follows:
1. Swing Check Valves: In horizontal position with hinge pin level.
2. Center-Guided and Plate-Type Check Valves: In horizontal or vertical position, between flanges.
3. Lift Check Valves: With stem upright and plumb.
F. Install valve tags. Comply with requirements in Section 220553 "Identification for Plumbing Piping and Equipment" for valve tags and schedules.

3.3 ADJUSTING

A. Adjust or replace valve packing after piping systems have been tested and put into service but before final adjusting and balancing. Replace valves if persistent leaking occurs.

3.4 GENERAL REQUIREMENTS FOR VALVE APPLICATIONS

A. If valve applications are not indicated, use the following:
1. Pump-Discharge Check Valves:
a. NPS 2 and Smaller: Bronze swing check valves with bronze or nonmetallic disc.
B. If valves with specified CWP ratings are unavailable, the same types of valves with higher CWP ratings may be substituted.
C. End Connections:
1. For Copper Tubing, NPS 2 and Smaller: Threaded or soldered.

3.5 LOW-PRESSURE, COMPRESSED-AIR VALVE SCHEDULE (150 PSIG OR LESS)

A. Pipe NPS 2 and Smaller:
   1. Vertical, Upflow Applications Only: Bronze lift check valves, Class 125, bronze disc with soldered or threaded end connections.
   2. Horizontal and Vertical Applications: Bronze swing check valves, Class 125, bronze disc with soldered or threaded end connections.

3.6 DOMESTIC HOT- AND COLD-WATER VALVE SCHEDULE

A. Pipe NPS 2 and Smaller: Bronze swing check valves, Class 125, bronze disc with soldered or threaded end connections.

END OF SECTION

SECTION 220529 - HANGERS AND SUPPORTS FOR PLUMBING PIPING AND EQUIPMENT

PART 1 GENERAL

1.1 SUMMARY

A. Section Includes:
1. Metal pipe hangers and supports.
2. Trapeze pipe hangers.
3. Fiberglass pipe hangers.
4. Metal framing systems.
5. Thermal-hanger shield inserts.
6. Fastener systems.
7. Pipe stands.
8. Pipe positioning systems.
9. Equipment supports.

B. Related Sections:
1. Section 055000 "Metal Fabrications" for structural-steel shapes and plates for trapeze hangers for pipe and equipment supports.
2. Section 220516 "Expansion Fittings and Loops for Plumbing Piping" for pipe guides and anchors.
3. Section 220548.13 "Vibration Controls for Plumbing Piping and Equipment" for vibration isolation devices.

1.2 DEFINITIONS

A. MSS: Manufacturers Standardization Society of Valve and Fittings Industry Inc.

1.3 PERFORMANCE REQUIREMENTS

A. Delegated Design: Design trapeze pipe hangers and equipment supports, including comprehensive engineering analysis by a qualified professional engineer, using performance requirements and design criteria indicated.

B. Structural Performance: Hangers and supports for plumbing piping and equipment shall withstand the effects of gravity loads and stresses within limits and under conditions indicated according to ASCE/SEI 7.
1. Design supports for multiple pipes, including pipe stands, capable of supporting combined weight of supported systems, system contents, and test water.
2. Design equipment supports capable of supporting combined operating weight of supported equipment and connected systems and components.
3. Design seismic-restraint hangers and supports for piping and equipment.

1.4 ACTION SUBMITTALS

A. Product Data: For each type of product indicated.

B. Shop Drawings: Show fabrication and installation details and include calculations for the following; include Product Data for components:
1. Trapeze pipe hangers.
2. Metal framing systems.
3. Fiberglass strut systems.
4. Pipe stands.
5. Equipment supports.

C. Delegated-Design Submittal: For trapeze hangers indicated to comply with performance requirements and design criteria, including analysis data signed and sealed by the qualified professional engineer responsible for their preparation.
1. Detail fabrication and assembly of trapeze hangers.

2. Design Calculations: Calculate requirements for designing trapeze hangers.

1.5 INFORMATIONAL SUBMITTALS

A. Welding certificates.

1.6 QUALITY ASSURANCE

A. Structural Steel Welding Qualifications: Qualify procedures and personnel according to AWS D1.1/D1.1M, "Structural Welding Code - Steel."
B. Pipe Welding Qualifications: Qualify procedures and operators according to ASME Boiler and Pressure Vessel Code.

PART 2 PRODUCTS

2.1 METAL PIPE HANGERS AND SUPPORTS

A. Carbon-Steel Pipe Hangers and Supports:
1. Description: MSS SP-58, Types 1 through 58, factory-fabricated components.
2. Galvanized Metallic Coatings: Pregalvanized or hot dipped.
3. Nonmetallic Coatings: Plastic coating, jacket, or liner.
4. Padded Hangers: Hanger with fiberglass or other pipe insulation pad or cushion to support bearing surface of piping.
5. Hanger Rods: Continuous-thread rod, nuts, and washer made of carbon steel.
B. Copper Pipe Hangers:
1. Description: MSS SP-58, Types 1 through 58, copper-coated-steel, factory-fabricated components.
2. Hanger Rods: Continuous-thread rod, nuts, and washer made of copper-coated steel.

2.2 TRAPEZE PIPE HANGERS

A. Description: MSS SP-69, Type 59, shop- or field-fabricated pipe-support assembly made from structural carbon-steel shapes with MSS SP-58 carbon-steel hanger rods, nuts, saddles, and U-bolts.

2.3 FIBERGLASS PIPE HANGERS

A. Clevis-Type, Fiberglass Pipe Hangers:
1. Description: Similar to MSS SP-58, Type 1, steel pipe hanger except hanger is made of fiberglass or fiberglass-reinforced resin.
2. Hanger Rods: Continuous-thread rod, washer, and nuts made of stainless steel.
B. Strap-Type, Fiberglass Pipe Hangers:
1. Description: Similar to MSS SP-58, Type 9 or Type 10, steel pipe hanger except hanger is made of fiberglass-reinforced resin.
2. Hanger Rod and Fittings: Continuous-thread rod, washer, and nuts made of stainless steel.

2.4 METAL FRAMING SYSTEMS

A. Non-MFMA Manufacturer Metal Framing Systems:
1. Description: Shop- or field-fabricated pipe-support assembly made of steel channels, accessories, fittings, and other components for supporting multiple parallel pipes.
2. Standard: Comply with MFMA-4.
3. Channels: Continuous slotted steel channel with inturned lips.
4. Channel Nuts: Formed or stamped steel nuts or other devices designed to fit into channel slot and, when tightened, prevent slipping along channel.
5. Hanger Rods: Continuous-thread rod, nuts, and washer made of carbon steel.
6. Coating: Zinc.

2.5 THERMAL-HANGER SHIELD INSERTS

A. Manufacturers: Subject to compliance with requirements, provide products by one of the following:
   1. National Pipe Hanger Corporation.
   2. Value Engineered Products, Inc.
B. Insulation-Insert Material for Cold Piping: ASTM C 552, Type II cellular glass with 100-psig minimum compressive strength and vapor barrier.
C. Insulation-Insert Material for Hot Piping: ASTM C 552, Type II cellular glass with 100-psig minimum compressive strength.
D. For Trapeze or Clamped Systems: Insert and shield shall cover entire circumference of pipe.
E. For Clevis or Band Hangers: Insert and shield shall cover lower 180 degrees of pipe.
F. Insert Length: Extend 2 inches beyond sheet metal shield for piping operating below ambient air temperature.

2.6 FASTENER SYSTEMS

A. Powder-Actuated Fasteners: Threaded-steel stud, for use in hardened portland cement concrete with pull-out, tension, and shear capacities appropriate for supported loads and building materials where used.
B. Mechanical-Expansion Anchors: Insert-wedge-type, zinc-coated steel anchors, for use in hardened portland cement concrete; with pull-out, tension, and shear capacities appropriate for supported loads and building materials where used.

2.7 PIPE STANDS

A. General Requirements for Pipe Stands: Shop- or field-fabricated assemblies made of manufactured corrosion-resistant components to support roof-mounted piping.
B. Compact Pipe Stand: One-piece plastic unit with integral-rod roller, pipe clamps, or V-shaped cradle to support pipe, for roof installation without membrane penetration.
C. Low-Type, Single-Pipe Stand: One-piece plastic base unit with plastic roller, for roof installation without membrane penetration.
D. High-Type, Single-Pipe Stand:
   1. Description: Assembly of base, vertical and horizontal members, and pipe support, for roof installation without membrane penetration.
   2. Base: Plastic.
   3. Vertical Members: Two or more cadmium-plated-steel or stainless-steel, continuous-thread rods.
   4. Horizontal Member: Cadmium-plated-steel or stainless-steel rod with plastic or stainless-steel, roller-type pipe support.

2.8 PIPE POSITIONING SYSTEMS

A. Description: IAPMO PS 42, positioning system of metal brackets, clips, and straps for positioning piping in pipe spaces; for plumbing fixtures in commercial applications.

2.9 EQUIPMENT SUPPORTS

A. Description: Welded, shop- or field-fabricated equipment support made from structural carbon-steel shapes.

2.10 MISCELLANEOUS MATERIALS

A. Structural Steel: ASTM A 36/A 36M, carbon-steel plates, shapes, and bars; black and galvanized.
B. Grout: ASTM C 1107, factory-mixed and -packaged, dry, hydraulic-cement, nonshrink and nonmetallic grout; suitable for interior and exterior applications.
   1. Properties: Nonstaining, noncorrosive, and nongaseous.
   2. Design Mix: 5000-psi, 28-day compressive strength.

PART 3 EXECUTION

3.1 HANGER AND SUPPORT INSTALLATION

A. Metal Pipe-Hanger Installation: Comply with MSS SP-69 and MSS SP-89. Install hangers, supports, clamps, and attachments as required to properly support piping from the building structure.

B. Metal Trapeze Pipe-Hanger Installation: Comply with MSS SP-69 and MSS SP-89. Arrange for grouping of parallel runs of horizontal piping, and support together on field-fabricated trapeze pipe hangers.

1. Pipes of Various Sizes: Support together and space trapezes for smallest pipe size or install intermediate supports for smaller diameter pipes as specified for individual pipe hangers.

2. Field fabricate from ASTM A 36/A 36M, carbon-steel shapes selected for loads being supported. Weld steel according to AWS D1.1/D1.1M.

C. Fiberglass Pipe-Hanger Installation: Comply with applicable portions of MSS SP-69 and MSS SP-89. Install hangers and attachments as required to properly support piping from building structure.

D. Metal Framing System Installation: Arrange for grouping of parallel runs of piping, and support together on field-assembled metal framing systems.

E. Fiberglass Strut System Installation: Arrange for grouping of parallel runs of piping, and support together on field-assembled fiberglass struts.

F. Thermal-Hanger Shield Installation: Install in pipe hanger or shield for insulated piping.

G. Fastener System Installation:

1. Install powder-actuated fasteners for use in lightweight concrete or concrete slabs less than 4 inches thick in concrete after concrete is placed and completely cured. Use operators that are licensed by powder-actuated tool manufacturer. Install fasteners according to powder-actuated tool manufacturer's operating manual.

2. Install mechanical-expansion anchors in concrete after concrete is placed and completely cured. Install fasteners according to manufacturer's written instructions.

H. Pipe Stand Installation:

1. Pipe Stand Types except Curb-Mounted Type: Assemble components and mount on smooth roof surface. Do not penetrate roof membrane.

2. Curb-Mounted-Type Pipe Stands: Assemble components or fabricate pipe stand and mount on permanent, stationary roof curb. See Section 077200 "Roof Accessories" for curbs.

I. Pipe Positioning-System Installation: Install support devices to make rigid supply and waste piping connections to each plumbing fixture.

J. Install hangers and supports complete with necessary attachments, inserts, bolts, rods, nuts, washers, and other accessories.

K. Equipment Support Installation: Fabricate from welded-structural-steel shapes.

L. Install hangers and supports to allow controlled thermal and seismic movement of piping systems, to permit freedom of movement between pipe anchors, and to facilitate action of expansion joints, expansion loops, expansion bends, and similar units.

M. Install lateral bracing with pipe hangers and supports to prevent swaying.

N. Install building attachments within concrete slabs or attach to structural steel. Install additional attachments at concentrated loads, including valves, flanges, and strainers, NPS 2-1/2 and larger and at changes in direction of piping. Install concrete inserts before concrete is placed; fasten inserts to forms and install reinforcing bars through openings at top of inserts.

O. Load Distribution: Install hangers and supports so that piping live and dead loads and stresses from movement will not be transmitted to connected equipment.

P. Pipe Slopes: Install hangers and supports to provide indicated pipe slopes and to not exceed maximum pipe deflections allowed by ASME B31.9 for building services piping.

Q. Insulated Piping:

1. Attach clamps and spacers to piping.

a. Piping Operating above Ambient Air Temperature: Clamp may project through insulation.

b. Piping Operating below Ambient Air Temperature: Use thermal-hanger shield insert with clamp sized to match OD of insert.

c. Do not exceed pipe stress limits allowed by ASME B31.9 for building services piping.

2. Install MSS SP-58, Type 39, protection saddles if insulation without vapor barrier is indicated. Fill interior voids with insulation that matches adjoining insulation.
    a. Option: Thermal-hanger shield inserts may be used. Include steel weight-distribution plate for pipe NPS 4 and larger if pipe is installed on rollers.
3. Install MSS SP-58, Type 40, protective shields on cold piping with vapor barrier. Shields shall span an arc of 180 degrees.
    a. Option: Thermal-hanger shield inserts may be used. Include steel weight-distribution plate for pipe NPS 4 and larger if pipe is installed on rollers.
4. Shield Dimensions for Pipe: Not less than the following:
    a. NPS 1/4 to NPS 3-1/2: 12 inches long and 0.048 inch thick.
    b. NPS 4: 12 inches long and 0.06 inch thick.
5. Thermal-Hanger Shields: Install with insulation same thickness as piping insulation.

3.2 EQUIPMENT SUPPORTS

A. Fabricate structural-steel stands to suspend equipment from structure overhead or to support equipment above floor.
B. Grouting: Place grout under supports for equipment and make bearing surface smooth.
C. Provide lateral bracing, to prevent swaying, for equipment supports.

3.3 METAL FABRICATIONS

A. Cut, drill, and fit miscellaneous metal fabrications for trapeze pipe hangers and equipment supports.
B. Fit exposed connections together to form hairline joints. Field weld connections that cannot be shop welded because of shipping size limitations.

3.4 ADJUSTING

A. Hanger Adjustments: Adjust hangers to distribute loads equally on attachments and to achieve indicated slope of pipe.
B. Trim excess length of continuous-thread hanger and support rods to 1-1/2 inches.

3.5 PAINTING

A. Touchup: Clean field welds and abraded areas of shop paint. Paint exposed areas immediately after erecting hangers and supports. Use same materials as used for shop painting. Comply with SSPC-PA 1 requirements for touching up field-painted surfaces.
    1. Apply paint by brush or spray to provide a minimum dry film thickness of 2.0 mils.
B. Touchup: Cleaning and touchup painting of field welds, bolted connections, and abraded areas of shop paint on miscellaneous metal are specified in
C. Galvanized Surfaces: Clean welds, bolted connections, and abraded areas and apply galvanizing-repair paint to comply with ASTM A 780.

3.6 HANGER AND SUPPORT SCHEDULE

A. Specific hanger and support requirements are in Sections specifying piping systems and equipment.
B. Comply with MSS SP-69 for pipe-hanger selections and applications that are not specified in piping system Sections.
C. Use hangers and supports with galvanized metallic coatings for piping and equipment that will not have field-applied finish.
D. Use nonmetallic coatings on attachments for electrolytic protection where attachments are in direct contact with copper tubing.
E. Use carbon-steel pipe hangers and supports and attachments for general service applications.
F. Use stainless-steel pipe hangers and or corrosion-resistant attachments for hostile environment applications.
G. Use copper-plated pipe hangers and copper attachments for copper piping and tubing.
H. Use padded hangers for piping that is subject to scratching.

I. Use thermal-hanger shield inserts for insulated piping and tubing.

J. Horizontal-Piping Hangers and Supports: Unless otherwise indicated and except as specified in piping system Sections, install the following types:

1. Adjustable, Steel Clevis Hangers (MSS Type 1): For suspension of noninsulated or insulated, stationary pipes NPS 1/2 to NPS 30.
2. Yoke-Type Pipe Clamps (MSS Type 2): For suspension of up to 1050 deg F, pipes NPS 4 to NPS 24, requiring up to 4 inches of insulation.
3. Carbon- or Alloy-Steel, Double-Bolt Pipe Clamps (MSS Type 3): For suspension of pipes NPS 3/4 to NPS 36, requiring clamp flexibility and up to 4 inches of insulation.
4. Steel Pipe Clamps (MSS Type 4): For suspension of cold and hot pipes NPS 1/2 to NPS 24 if little or no insulation is required.
5. Pipe Hangers (MSS Type 5): For suspension of pipes NPS 1/2 to NPS 4, to allow off-center closure for hanger installation before pipe erection.
6. Adjustable, Swivel Split- or Solid-Ring Hangers (MSS Type 6): For suspension of noninsulated, stationary pipes NPS 3/4 to NPS 8.
7. Adjustable, Steel Band Hangers (MSS Type 7): For suspension of noninsulated, stationary pipes NPS 1/2 to NPS 8.
8. Adjustable Band Hangers (MSS Type 9): For suspension of noninsulated, stationary pipes NPS 1/2 to NPS 8.
9. Adjustable, Swivel-Ring Band Hangers (MSS Type 10): For suspension of noninsulated, stationary pipes NPS 1/2 to NPS 8.
10. Split Pipe Ring with or without Turnbuckle Hangers (MSS Type 11): For suspension of noninsulated, stationary pipes NPS 3/8 to NPS 8.
11. Extension Hinged or Two-Bolt Split Pipe Clamps (MSS Type 12): For suspension of noninsulated, stationary pipes NPS 3/8 to NPS 3.
12. U-Bolts (MSS Type 24): For support of heavy pipes NPS 1/2 to NPS 30.
13. Clips (MSS Type 26): For support of insulated pipes not subject to expansion or contraction.
14. Pipe Saddle Supports (MSS Type 36): For support of pipes NPS 4 to NPS 36, with steel-pipe base stanchion support and cast-iron floor flange or carbon-steel plate.
15. Pipe Stanchion Saddles (MSS Type 37): For support of pipes NPS 4 to NPS 36, with steel-pipe base stanchion support and cast-iron floor flange or carbon-steel plate, and with U-bolt to retain pipe.
16. Adjustable Pipe Saddle Supports (MSS Type 38): For stanchion-type support for pipes NPS 2-1/2 to NPS 36 if vertical adjustment is required, with steel-pipe base stanchion support and cast-iron floor flange.
17. Single-Pipe Rolls (MSS Type 41): For suspension of pipes NPS 1 to NPS 30, from two rods if longitudinal movement caused by expansion and contraction might occur.
18. Adjustable Roller Hangers (MSS Type 43): For suspension of pipes NPS 2-1/2 to NPS 24, from single rod if horizontal movement caused by expansion and contraction might occur.
19. Complete Pipe Rolls (MSS Type 44): For support of pipes NPS 2 to NPS 42 if longitudinal movement caused by expansion and contraction might occur but vertical adjustment is not necessary.
20. Pipe Roll and Plate Units (MSS Type 45): For support of pipes NPS 2 to NPS 24 if small horizontal movement caused by expansion and contraction might occur and vertical adjustment is not necessary.
21. Adjustable Pipe Roll and Base Units (MSS Type 46): For support of pipes NPS 2 to NPS 30 if vertical and lateral adjustment during installation might be required in addition to expansion and contraction.

K. Vertical-Piping Clamps: Unless otherwise indicated and except as specified in piping system Sections, install the following types:

1. Extension Pipe or Riser Clamps (MSS Type 8): For support of pipe risers NPS 3/4 to NPS 24.
2. Carbon- or Alloy-Steel Riser Clamps (MSS Type 42): For support of pipe risers NPS 3/4 to NPS 24 if longer ends are required for riser clamps.

L. Hanger-Rod Attachments: Unless otherwise indicated and except as specified in piping system Sections, install the following types:

1. Steel Turnbuckles (MSS Type 13): For adjustment up to 6 inches for heavy loads.

2. Steel Clevises (MSS Type 14): For 120 to 450 deg F piping installations.
3. Swivel Turnbuckles (MSS Type 15): For use with MSS Type 11, split pipe rings.
4. Malleable-Iron Sockets (MSS Type 16): For attaching hanger rods to various types of building attachments.
5. Steel Weldless Eye Nuts (MSS Type 17): For 120 to 450 deg F piping installations.

M. Building Attachments: Unless otherwise indicated and except as specified in piping system Sections, install the following types:
1. Steel or Malleable Concrete Inserts (MSS Type 18): For upper attachment to suspend pipe hangers from concrete ceiling.
2. Top-Beam C-Clamps (MSS Type 19): For use under roof installations with bar-joist construction, to attach to top flange of structural shape.
3. Side-Beam or Channel Clamps (MSS Type 20): For attaching to bottom flange of beams, channels, or angles.
4. Center-Beam Clamps (MSS Type 21): For attaching to center of bottom flange of beams.
5. Welded Beam Attachments (MSS Type 22): For attaching to bottom of beams if loads are considerable and rod sizes are large.
6. C-Clamps (MSS Type 23): For structural shapes.
7. Top-Beam Clamps (MSS Type 25): For top of beams if hanger rod is required tangent to flange edge.
8. Side-Beam Clamps (MSS Type 27): For bottom of steel I-beams.
9. Steel-Beam Clamps with Eye Nuts (MSS Type 28): For attaching to bottom of steel I-beams for heavy loads.
10. Linked-Steel Clamps with Eye Nuts (MSS Type 29): For attaching to bottom of steel I-beams for heavy loads, with link extensions.
11. Malleable-Beam Clamps with Extension Pieces (MSS Type 30): For attaching to structural steel.
12. Welded-Steel Brackets: For support of pipes from below or for suspending from above by using clip and rod. Use one of the following for indicated loads:
    a. Light (MSS Type 31): 750 lb.
    b. Medium (MSS Type 32): 1500 lb.
    c. Heavy (MSS Type 33): 3000 lb.
13. Side-Beam Brackets (MSS Type 34): For sides of steel or wooden beams.
14. Plate Lugs (MSS Type 57): For attaching to steel beams if flexibility at beam is required.
15. Horizontal Travelers (MSS Type 58): For supporting piping systems subject to linear horizontal movement where headroom is limited.

N. Saddles and Shields: Unless otherwise indicated and except as specified in piping system Sections, install the following types:
1. Steel-Pipe-Covering Protection Saddles (MSS Type 39): To fill interior voids with insulation that matches adjoining insulation.
2. Protection Shields (MSS Type 40): Of length recommended in writing by manufacturer to prevent crushing insulation.
3. Thermal-Hanger Shield Inserts: For supporting insulated pipe.

O. Spring Hangers and Supports: Unless otherwise indicated and except as specified in piping system Sections, install the following types:
1. Restraint-Control Devices (MSS Type 47): Where indicated to control piping movement.
2. Spring Cushions (MSS Type 48): For light loads if vertical movement does not exceed 1-1/4 inches.
3. Spring-Cushion Roll Hangers (MSS Type 49): For equipping Type 41, roll hanger with springs.
4. Spring Sway Braces (MSS Type 50): To retard sway, shock, vibration, or thermal expansion in piping systems.
5. Variable-Spring Hangers (MSS Type 51): Preset to indicated load and limit variability factor to 25 percent to allow expansion and contraction of piping system from hanger.
6. Variable-Spring Base Supports (MSS Type 52): Preset to indicated load and limit variability factor to 25 percent to allow expansion and contraction of piping system from base support.
7. Variable-Spring Trapeze Hangers (MSS Type 53): Preset to indicated load and limit variability factor to 25 percent to allow expansion and contraction of piping system from trapeze support.

8. Constant Supports: For critical piping stress and if necessary to avoid transfer of stress from one support to another support, critical terminal, or connected equipment. Include auxiliary stops for erection, hydrostatic test, and load-adjustment capability. These supports include the following types:
    a. Horizontal (MSS Type 54): Mounted horizontally.
    b. Vertical (MSS Type 55): Mounted vertically.
    c. Trapeze (MSS Type 56): Two vertical-type supports and one trapeze member.

P. Comply with MSS SP-69 for trapeze pipe-hanger selections and applications that are not specified in piping system Sections.

Q. Comply with MFMA-103 for metal framing system selections and applications that are not specified in piping system Sections.

R. Use mechanical-expansion anchors instead of building attachments where required in concrete construction.

S. Use pipe positioning systems in pipe spaces behind plumbing fixtures to support supply and waste piping for plumbing fixtures.

END OF SECTION

SECTION 220548.13 - VIBRATION CONTROLS FOR PLUMBING PIPING AND EQUIPMENT

PART 1 GENERAL

1.1 SUMMARY

A. Section Includes:
1. Elastomeric isolation pads.
2. Elastomeric isolation mounts.
3. Elastomeric hangers.
4. Spring hangers.

B. Related Requirements:
1. Section 230548.13 "Vibration Controls for HVAC" for devices for HVAC equipment and systems.

1.2 ACTION SUBMITTALS

A. Product Data: For each type of product.
1. Include rated load, rated deflection, and overload capacity for each vibration isolation device.
2. Illustrate and indicate style, material, strength, fastening provision, and finish for each type and size of vibration isolation device type required.

B. Shop Drawings:
1. Detail fabrication and assembly of equipment bases. Detail fabrication including anchorages and attachments to structure and to supported equipment.

C. Delegated-Design Submittal: For each vibration isolation device.
1. Include design calculations for selecting vibration isolators.

1.3 INFORMATIONAL SUBMITTALS

A. Qualification Data: For testing agency.

B. Welding certificates.

1.4 QUALITY ASSURANCE

A. Welding Qualifications: Qualify procedures and personnel according to AWS D1.1/D1.1M, "Structural Welding Code - Steel."

PART 2 PRODUCTS

2.1 ELASTOMERIC ISOLATION PADS

A. Elastomeric Isolation Pads: .
1. Fabrication: Single or multiple layers of sufficient durometer stiffness for uniform loading over pad area.
2. Size: Factory or field cut to match requirements of supported equipment.
3. Pad Material: Oil and water resistant with elastomeric properties.
4. Surface Pattern: pattern.
5. Infused nonwoven cotton or synthetic fibers.
6. Load-bearing metal plates adhered to pads.
7. Sandwich-Core Material: .

2.2 ELASTOMERIC ISOLATION MOUNTS

A. Double-Deflection, Elastomeric Isolation Mounts: .
1. Mounting Plates:

a. Top Plate: Encapsulated steel load transfer top plates, factory drilled and threaded.
b. Baseplate: Encapsulated steel bottom plates with holes provided for anchoring to support structure.

2. Elastomeric Material: Molded, oil-resistant rubber, neoprene, or other elastomeric material.

2.3 ELASTOMERIC HANGERS

A. Elastomeric Mount in a Steel Frame with Upper and Lower Steel Hanger Rods: .
1. Frame: Steel, fabricated with a connection for an upper threaded hanger rod and an opening on the underside to allow for a maximum of 30 degrees of angular lower hanger-rod misalignment without binding or reducing isolation efficiency.
2. Dampening Element: Molded, oil-resistant rubber, neoprene, or other elastomeric material with a projecting bushing for the underside opening preventing steel to steel contact.

2.4 SPRING HANGERS

A. Combination Coil-Spring and Elastomeric-Insert Hanger with Spring and Insert in Compression: .
1. Frame: Steel, fabricated for connection to threaded hanger rods and to allow for a maximum of 30 degrees of angular hanger-rod misalignment without binding or reducing isolation efficiency.
2. Outside Spring Diameter: Not less than 80 percent of the compressed height of the spring at rated load.
3. Minimum Additional Travel: 50 percent of the required deflection at rated load.
4. Lateral Stiffness: More than 80 percent of rated vertical stiffness.
5. Overload Capacity: Support 200 percent of rated load, fully compressed, without deformation or failure.
6. Elastomeric Element: Molded, oil-resistant rubber or neoprene. Steel-washer-reinforced cup to support spring and bushing projecting through bottom of frame.
7. Adjustable Vertical Stop: Steel washer with neoprene washer "up-stop" on lower threaded rod.
8. Self-centering hanger rod cap to ensure concentricity between hanger rod and support spring coil.

PART 3 EXECUTION

3.1 EXAMINATION

A. Examine areas and equipment to receive vibration isolation control devices for compliance with requirements for installation tolerances and other conditions affecting performance of the Work.
B. Examine roughing-in of reinforcement and cast-in-place anchors to verify actual locations before installation.
C. Proceed with installation only after unsatisfactory conditions have been corrected.

3.2 VIBRATION CONTROL DEVICE INSTALLATION

A. Coordinate the location of embedded connection hardware with supported equipment attachment and mounting points and with requirements for concrete reinforcement and formwork specified in Section 033000 "Cast-in-Place Concrete."
B. Installation of vibration isolators must not cause any change of position of equipment, piping, or ductwork resulting in stresses or misalignment.

END OF SECTION

SECTION 220553 - IDENTIFICATION FOR PLUMBING PIPING AND EQUIPMENT

PART 1 GENERAL

1.1 SUMMARY

A. Section Includes:
1. Equipment labels.
2. Warning signs and labels.
3. Pipe labels.
4. Stencils.
5. Valve tags.
6. Warning tags.

1.2 ACTION SUBMITTALS

A. Product Data: For each type of product indicated.
B. Samples: For color, letter style, and graphic representation required for each identification material and device.
C. Equipment Label Schedule: Include a listing of all equipment to be labeled with the proposed content for each label.
D. Valve numbering scheme.
E. Valve Schedules: For each piping system to include in maintenance manuals.

PART 2 PRODUCTS

2.1 EQUIPMENT LABELS

A. Metal Labels for Equipment:
1. Manufacturers: Subject to compliance with requirements, provide products by one of the following:
a. Brady Corporation.
b. Marking Services, Inc.
c. Seton Identification Products.
2. Material and Thickness: Brass, 0.032-inch aluminum, 0.032-inch or anodized aluminum, 0.032-inch minimum thickness, and having predrilled or stamped holes for attachment hardware.
3. Letter Color: Black.
4. Background Color: White.
5. Minimum Label Size: Length and width vary for required label content, but not less than 2-1/2 by 3/4 inch.
6. Minimum Letter Size: 1/4 inch for name of units if viewing distance is less than 24 inches, 1/2 inch for viewing distances up to 72 inches, and proportionately larger lettering for greater viewing distances. Include secondary lettering two-thirds to three-quarters the size of principal lettering.
7. Fasteners: Stainless-steel rivets or self-tapping screws.
8. Adhesive: Contact-type permanent adhesive, compatible with label and with substrate.
B. Plastic Labels for Equipment:
1. Manufacturers: Subject to compliance with requirements, provide products by one of the following:
a. Brady Corporation.
b. Marking Services, Inc.
c. Seton Identification Products.
2. Material and Thickness: Multilayer, multicolor, plastic labels for mechanical engraving, 1/8 inch thick, and having predrilled holes for attachment hardware.
3. Letter Color: Black.
4. Background Color: White.

5. Maximum Temperature: Able to withstand temperatures up to 160 deg F.
6. Minimum Label Size: Length and width vary for required label content, but not less than 2-1/2 by 3/4 inch.
7. Minimum Letter Size: 1/4 inch for name of units if viewing distance is less than 24 inches, 1/2 inch for viewing distances up to 72 inches, and proportionately larger lettering for greater viewing distances. Include secondary lettering two-thirds to three-quarters the size of principal lettering.
8. Fasteners: Stainless-steel rivets or self-tapping screws.
9. Adhesive: Contact-type permanent adhesive, compatible with label and with substrate.

C. Label Content: Include equipment's Drawing designation or unique equipment number, Drawing numbers where equipment is indicated (plans, details, and schedules), and the Specification Section number and title where equipment is specified.

D. Equipment Label Schedule: For each item of equipment to be labeled, on 8-1/2-by-11-inch bond paper. Tabulate equipment identification number, and identify Drawing numbers where equipment is indicated (plans, details, and schedules) and the Specification Section number and title where equipment is specified. Equipment schedule shall be included in operation and maintenance data.

2.2 WARNING SIGNS AND LABELS

A. Manufacturers: Subject to compliance with requirements, provide products by one of the following:
1. Brady Corporation.
2. Marking Sevices Inc.
3. Seton Identification Products.

B. Material and Thickness: Multilayer, multicolor, plastic labels for mechanical engraving, 1/8 inch thick, and having predrilled holes for attachment hardware.

C. Letter Color: Black.

D. Background Color: White.

E. Maximum Temperature: Able to withstand temperatures up to 160 deg F.

F. Minimum Label Size: Length and width vary for required label content, but not less than 2-1/2 by 3/4 inch.

G. Minimum Letter Size: 1/4 inch for name of units if viewing distance is less than 24 inches, 1/2 inch for viewing distances up to 72 inches, and proportionately larger lettering for greater viewing distances. Include secondary lettering two-thirds to three-quarters the size of principal lettering.

H. Fasteners: Stainless-steel rivets or self-tapping screws.

I. Adhesive: Contact-type permanent adhesive, compatible with label and with substrate.

J. Label Content: Include caution and warning information plus emergency notification instructions.

2.3 PIPE LABELS

A. Manufacturers: Subject to compliance with requirements, provide products by one of the following:
1. Brady Corporation.
2. Marking Sevices Inc.
3. Seton Identification Products.

B. General Requirements for Manufactured Pipe Labels: Preprinted, color-coded, with lettering indicating service, and showing flow direction.

C. Pretensioned Pipe Labels: Precoiled, semirigid plastic formed to partially cover circumference of pipe and to attach to pipe without fasteners or adhesive.

D. Self-Adhesive Pipe Labels: Printed plastic with contact-type, permanent-adhesive backing.

E. Pipe Label Contents: Include identification of piping service using same designations or abbreviations as used on Drawings; also include pipe size and an arrow indicating flow direction.
1. Flow-Direction Arrows: Integral with piping-system service lettering to accommodate both directions or as separate unit on each pipe label to indicate flow direction.
2. Lettering Size: Size letters according to ASME A13.1 for piping.

2.4 STENCILS

A. Stencils for Piping:
1. Manufacturers: Subject to compliance with requirements, provide products by one of the following:
a. Brimar Industries, Inc.

b. Carlton Industries, LP.
c. Marking Sevices Inc.

2. Lettering Size: Size letters according to ASME A13.1 for piping.
3. Stencil Material: Aluminum.
4. Stencil Paint: Exterior, gloss, alkyd enamel in colors complying with recommendations in ASME A13.1 unless otherwise indicated. Paint may be in pressurized spray-can form.
5. Identification Paint: Exterior, alkyd enamel in colors according to ASME A13.1 unless otherwise indicated. Paint may be in pressurized spray-can form.

2.5 VALVE TAGS

A. Manufacturers: Subject to compliance with requirements, provide products by one of the following:
1. Brady Corporation.
2. Marking Sevices Inc.
3. Seton Identification Products.

B. Valve Tags: Stamped or engraved with 1/4-inch letters for piping system abbreviation and 1/2-inch numbers.
1. Tag Material: Brass, 0.032-inch minimum thickness, and having predrilled or stamped holes for attachment hardware.
2. Fasteners: Brass wire-link chain.

C. Valve Schedules: For each piping system, on 8-1/2-by-11-inch bond paper. Tabulate valve number, piping system, system abbreviation (as shown on valve tag), location of valve (room or space), normal-operating position (open, closed, or modulating), and variations for identification. Mark valves for emergency shutoff and similar special uses.
1. Valve-tag schedule shall be included in operation and maintenance data.

2.6 WARNING TAGS

A. Manufacturers: Subject to compliance with requirements, provide products by one of the following:
1. Brady Corporation.
2. Marking Sevices Inc.
3. Seton Identification Products.

B. Description: Preprinted or partially preprinted accident-prevention tags of plasticized card stock with matte finish suitable for writing.
1. Size: 3 by 5-1/4 inches minimum.
2. Fasteners: Brass grommet and wire.
3. Nomenclature: Large-size primary caption such as "DANGER," "CAUTION," or "DO NOT OPERATE."
4. Color: Safety yellow background with black lettering.

PART 3 EXECUTION

3.1 PREPARATION

A. Clean piping and equipment surfaces of substances that could impair bond of identification devices, including dirt, oil, grease, release agents, and incompatible primers, paints, and encapsulants.

3.2 GENERAL INSTALLATION REQUIREMENTS

A. Coordinate installation of identifying devices with completion of covering and painting of surfaces where devices are to be applied.
B. Coordinate installation of identifying devices with locations of access panels and doors.
C. Install identifying devices before installing acoustical ceilings and similar concealment.

3.3 EQUIPMENT LABEL INSTALLATION

A. Install or permanently fasten labels on each major item of mechanical equipment.
B. Locate equipment labels where accessible and visible.

3.4 PIPE LABEL INSTALLATION

A. Piping Color Coding: Painting of piping is specified in Section 099123 "Interior Painting."
B. Stenciled Pipe Label Option: Stenciled labels may be provided instead of manufactured pipe labels, at Installer's option. Install stenciled pipe labels, complying with ASME A13.1, on each piping system.
   1. Identification Paint: Use for contrasting background.
   2. Stencil Paint: Use for pipe marking.
C. Pipe Label Locations: Locate pipe labels where piping is exposed or above accessible ceilings in finished spaces; machine rooms; accessible maintenance spaces such as shafts, tunnels, and plenums; and exterior exposed locations as follows:
   1. Near each valve and control device.
   2. Near each branch connection, excluding short takeoffs for fixtures and terminal units. Where flow pattern is not obvious, mark each pipe at branch.
   3. Near penetrations through walls, floors, ceilings, and inaccessible enclosures.
   4. At access doors, manholes, and similar access points that permit view of concealed piping.
   5. Near major equipment items and other points of origination and termination.
   6. Spaced at maximum intervals of 50 feet along each run. Reduce intervals to 25 feet in areas of congested piping and equipment.
   7. On piping above removable acoustical ceilings. Omit intermediately spaced labels.
D. Directional Flow Arrows: Arrows shall be used to indicate direction of flow in pipes, including pipes where flow is allowed in both directions.
E. Pipe Label Color Schedule:
   1. Low-Pressure Compressed Air Piping:
      a. Background: Safety blue.
      b. Letter Colors: White.
   2. Domestic Water Piping
      a. Background: Safety green.
      b. Letter Colors: White.
   3. Sanitary Waste and Storm Drainage Piping:
      a. Background Color: Safety white.
      b. Letter Color: Black.

3.5 VALVE-TAG INSTALLATION

A. Install tags on valves and control devices in piping systems, except check valves, valves within factory-fabricated equipment units, shutoff valves, faucets, convenience and lawn-watering hose connections, and similar roughing-in connections of end-use fixtures and units. List tagged valves in a valve schedule.
B. Valve-Tag Application Schedule: Tag valves according to size, shape, and color scheme and with captions similar to those indicated in the following subparagraphs:
   1. Valve-Tag Size and Shape:
      a. Cold Water: 2 inches, square.
      b. Hot Water: 2 inches, square.
      c. Low-Pressure Compressed Air: 2 inches, square.
   2. Valve-Tag Colors:
      a. Cold Water: Safety green.
      b. Hot Water: Safety green.
      c. Low-Pressure Compressed Air: Safety blue.
   3. Letter Colors:
      a. Cold Water: White.
      b. Hot Water: White.

c. Low-Pressure Compressed Air: White.

3.6 WARNING-TAG INSTALLATION

A. Write required message on, and attach warning tags to, equipment and other items where required.

END OF SECTION

SECTION 220719 - PLUMBING PIPING INSULATION

PART 1 GENERAL

1.1 SUMMARY

A. Section includes insulating the following plumbing piping services:
   1. Domestic cold-water piping.
   2. Domestic hot-water piping.
   3. Domestic recirculating hot-water piping.
   4. Domestic chilled-water piping for drinking fountains.
   5. Supplies and drains for handicap-accessible lavatories and sinks.

B. Related Sections:
   1. Section 220716 "Plumbing Equipment Insulation."

1.2 ACTION SUBMITTALS

A. Product Data: For each type of product indicated. Include thermal conductivity, water-vapor permeance thickness, and jackets (both factory- and field-applied, if any).

B. Shop Drawings: Include plans, elevations, sections, details, and attachments to other work.
   1. Detail application of protective shields, saddles, and inserts at hangers for each type of insulation and hanger.
   2. Detail attachment and covering of heat tracing inside insulation.
   3. Detail insulation application at pipe expansion joints for each type of insulation.
   4. Detail insulation application at elbows, fittings, flanges, valves, and specialties for each type of insulation.
   5. Detail removable insulation at piping specialties, equipment connections, and access panels.
   6. Detail application of field-applied jackets.
   7. Detail application at linkages of control devices.

C. Samples: For each type of insulation and jacket indicated. Identify each Sample, describing product and intended use. Sample sizes are as follows:
   1. Preformed Pipe Insulation Materials: 12 inches long by NPS 2.
   2. Jacket Materials for Pipe: 12 inches long by NPS 2.
   3. Sheet Jacket Materials: 12 inches square.
   4. Manufacturer's Color Charts: For products where color is specified, show the full range of colors available for each type of finish material.

1.3 INFORMATIONAL SUBMITTALS

A. Qualification Data: For qualified Installer.

B. Material Test Reports: From a qualified testing agency acceptable to authorities having jurisdiction indicating, interpreting, and certifying test results for compliance of insulation materials, sealers, attachments, cements, and jackets, with requirements indicated. Include dates of tests and test methods employed.

C. Field quality-control reports.

1.4 QUALITY ASSURANCE

A. Installer Qualifications: Skilled mechanics who have successfully completed an apprenticeship program or another craft training program certified by the Department of Labor, Bureau of Apprenticeship and Training.

B. Surface-Burning Characteristics: For insulation and related materials, as determined by testing identical products according to ASTM E 84 by a testing agency acceptable to authorities having jurisdiction. Factory label insulation and jacket materials and adhesive, mastic, tapes, and cement material containers, with appropriate markings of applicable testing agency.

1. Insulation Installed Indoors: Flame-spread index of 25 or less, and smoke-developed index of 50 or less.
2. Insulation Installed Outdoors: Flame-spread index of 75 or less, and smoke-developed index of 150 or less.

C. Comply with the following applicable standards and other requirements specified for miscellaneous components:
1. Supply and Drain Protective Shielding Guards: ICC A117.1.

1.5 DELIVERY, STORAGE, AND HANDLING

A. Packaging: Insulation material containers shall be marked by manufacturer with appropriate ASTM standard designation, type and grade, and maximum use temperature.

1.6 COORDINATION

A. Coordinate sizes and locations of supports, hangers, and insulation shields specified in Section 220529 "Hangers and Supports for Plumbing Piping and Equipment."
B. Coordinate clearance requirements with piping Installer for piping insulation application. Before preparing piping Shop Drawings, establish and maintain clearance requirements for installation of insulation and field-applied jackets and finishes and for space required for maintenance.
C. Coordinate installation and testing of heat tracing.

1.7 SCHEDULING

A. Schedule insulation application after pressure testing systems and, where required, after installing and testing heat tracing. Insulation application may begin on segments that have satisfactory test results.
B. Complete installation and concealment of plastic materials as rapidly as possible in each area of construction.

PART 2 PRODUCTS

2.1 INSULATION MATERIALS

A. Comply with requirements in "Piping Insulation Schedule, General," "Indoor Piping Insulation Schedule," "Outdoor, Aboveground Piping Insulation Schedule," and "Outdoor, Underground Piping Insulation Schedule" articles for where insulating materials shall be applied.
B. Products shall not contain asbestos, lead, mercury, or mercury compounds.
C. Products that come in contact with stainless steel shall have a leachable chloride content of less than 50 ppm when tested according to ASTM C 871.
D. Insulation materials for use on austenitic stainless steel shall be qualified as acceptable according to ASTM C 795.
E. Foam insulation materials shall not use CFC or HCFC blowing agents in the manufacturing process.
F. Cellular Glass: Inorganic, incombustible, foamed or cellulated glass with annealed, rigid, hermetically sealed cells. Factory-applied jacket requirements are specified in "Factory-Applied Jackets" Article.
1. Block Insulation: ASTM C 552, Type I.
2. Special-Shaped Insulation: ASTM C 552, Type III.
3. Preformed Pipe Insulation without Jacket: Comply with ASTM C 552, Type II, Class 1.
4. Preformed Pipe Insulation with Factory-Applied : Comply with ASTM C 552, Type II, Class 2.
5. Factory fabricate shapes according to ASTM C 450 and ASTM C 585.

G. Flexible Elastomeric Insulation: Closed-cell, sponge- or expanded-rubber materials. Comply with ASTM C 534, Type I for tubular materials.
1. Manufacturers: Subject to compliance with requirements, provide products by the following:
a. Armacell LLC.

H. Mineral-Fiber Blanket Insulation: Mineral or glass fibers bonded with a thermosetting resin. Comply with ASTM C 553, Type II and ASTM C 1290, Type I. Factory-applied jacket requirements are specified in "Factory-Applied Jackets" Article.

1. Manufacturers: Subject to compliance with requirements, provide products by the following:
   a. Owens Corning.

I. Mineral-Fiber, Preformed Pipe Insulation:
   1. Manufacturers: Subject to compliance with requirements, provide products by one of the following:
      a. Johns Manville; a Berkshire Hathaway company.
      b. Owens Corning.
   2. Type I, 850 Deg F Materials: Mineral or glass fibers bonded with a thermosetting resin. Comply with ASTM C 547, Type I, Grade A,. Factory-applied jacket requirements are specified in "Factory-Applied Jackets" Article.

2.2 ADHESIVES

A. Materials shall be compatible with insulation materials, jackets, and substrates and for bonding insulation to itself and to surfaces to be insulated, unless otherwise indicated.

B. Cellular-Glass Adhesive: Two-component, thermosetting urethane adhesive containing no flammable solvents, with a service temperature range of minus 100 to plus 200 deg F.
   1. One or both subparagraphs below may be required to comply with Project requirements or authorities having jurisdiction. Retain first subparagraph below if required for LEED-NC, LEED-CI, or LEED-CS Credit IEQ 4.1.
   2. For indoor applications, adhesive shall have a VOC content of 50 g/L or less when calculated according to 40 CFR 59, Subpart D (EPA Method 24).
   3. Adhesive shall comply with the testing and product requirements of the California Department of Health Services' "Standard Practice for the Testing of Volatile Organic Emissions from Various Sources Using Small-Scale Environmental Chambers."

C. Flexible Elastomeric and Polyolefin Adhesive: Comply with MIL-A-24179A, Type II, Class I.
   1. One or both subparagraphs below may be required to comply with Project requirements or authorities having jurisdiction. Retain first subparagraph below if required for LEED-NC, LEED-CI, or LEED-CS Credit IEQ 4.1.
   2. For indoor applications, adhesive shall have a VOC content of 50 g/L or less when calculated according to 40 CFR 59, Subpart D (EPA Method 24).
   3. Adhesive shall comply with the testing and product requirements of the California Department of Health Services' "Standard Practice for the Testing of Volatile Organic Emissions from Various Sources Using Small-Scale Environmental Chambers."

D. Mineral-Fiber Adhesive: Comply with MIL-A-3316C, Class 2, Grade A.
   1. One or both subparagraphs below may be required to comply with Project requirements or authorities having jurisdiction. Retain first subparagraph below if required for LEED-NC, LEED-CI, or LEED-CS Credit IEQ 4.1.
   2. For indoor applications, adhesive shall have a VOC content of 80 g/L or less when calculated according to 40 CFR 59, Subpart D (EPA Method 24).
   3. Adhesive shall comply with the testing and product requirements of the California Department of Health Services' "Standard Practice for the Testing of Volatile Organic Emissions from Various Sources Using Small-Scale Environmental Chambers."

E. Phenolic Adhesive: Solvent-based resin adhesive, with a service temperature range of minus 75 to plus 300 deg F.
   1. One or both subparagraphs below may be required to comply with Project requirements or authorities having jurisdiction. Retain first subparagraph below if required for LEED-NC, LEED-CI, or LEED-CS Credit IEQ 4.1.
   2. For indoor applications, adhesive shall have a VOC content of 50 g/L or less when calculated according to 40 CFR 59, Subpart D (EPA Method 24).
   3. Adhesive shall comply with the testing and product requirements of the California Department of Health Services' "Standard Practice for the Testing of Volatile Organic Emissions from Various Sources Using Small-Scale Environmental Chambers."

F. ASJ Adhesive, and FSK Jacket Adhesive: Comply with MIL-A-3316C, Class 2, Grade A for bonding insulation jacket lap seams and joints.
   1. One or both subparagraphs below may be required to comply with Project requirements or authorities having jurisdiction. Retain first subparagraph below if required for LEED-NC, LEED-CI, or LEED-CS Credit IEQ 4.1.

2. For indoor applications, adhesive shall have a VOC content of 50 g/L or less when calculated according to 40 CFR 59, Subpart D (EPA Method 24).
   a. Adhesive shall comply with the testing and product requirements of the California Department of Health Services' "Standard Practice for the Testing of Volatile Organic Emissions from Various Sources Using Small-Scale Environmental Chambers."

G. PVC Jacket Adhesive: Compatible with PVC jacket.
   1. One or both subparagraphs below may be required to comply with Project requirements or authorities having jurisdiction. Retain first subparagraph below if required for LEED-NC, LEED-CI, or LEED-CS Credit IEQ 4.1.
   2. For indoor applications, adhesive shall have a VOC content of 50 g/L or less when calculated according to 40 CFR 59, Subpart D (EPA Method 24).
   3. Adhesive shall comply with the testing and product requirements of the California Department of Health Services' "Standard Practice for the Testing of Volatile Organic Emissions from Various Sources Using Small-Scale Environmental Chambers."

2.3 MASTICS

A. Materials shall be compatible with insulation materials, jackets, and substrates; comply with MIL-PRF-19565C, Type II.
   1. For indoor applications, use mastics that have a VOC content of 50 g/L or less when calculated according to 40 CFR 59, Subpart D (EPA Method 24).

B. Vapor-Barrier Mastic: Water based; suitable for indoor use on below-ambient services.
   1. Water-Vapor Permeance: ASTM E 96/E 96M, Procedure B, 0.013 perm at 43-mil dry film thickness.
   2. Service Temperature Range: Minus 20 to plus 180 deg F.
   3. Solids Content: ASTM D 1644, 58 percent by volume and 70 percent by weight.
   4. Color: White.

C. Vapor-Barrier Mastic: Solvent based; suitable for indoor use on below-ambient services.
   1. Water-Vapor Permeance: ASTM F 1249, 0.05 perm at 35-mil dry film thickness.
   2. Service Temperature Range: 0 to 180 deg F.
   3. Solids Content: ASTM D 1644, 44 percent by volume and 62 percent by weight.
   4. Color: White.

D. Vapor-Barrier Mastic: Solvent based; suitable for outdoor use on below-ambient services.
   1. Water-Vapor Permeance: ASTM F 1249, 0.05 perm at 30-mil dry film thickness.
   2. Service Temperature Range: Minus 50 to plus 220 deg F.
   3. Solids Content: ASTM D 1644, 33 percent by volume and 46 percent by weight.
   4. Color: White.

E. Breather Mastic: Water based; suitable for indoor and outdoor use on above-ambient services.
   1. Water-Vapor Permeance: ASTM F 1249, 1.8 perms at 0.0625-inch dry film thickness.
   2. Service Temperature Range: Minus 20 to plus 180 deg F.
   3. Solids Content: 60 percent by volume and 66 percent by weight.
   4. Color: White.

2.4 LAGGING ADHESIVES

A. Description: Comply with MIL-A-3316C, Class I, Grade A, and shall be compatible with insulation materials, jackets, and substrates.
   1. For indoor applications, use lagging adhesives that have a VOC content of 50 g/L or less when calculated according to 40 CFR 59, Subpart D (EPA Method 24).
   2. Fire-resistant, water-based lagging adhesive and coating for use indoors to adhere fire-resistant lagging cloths over pipe insulation.
   3. Service Temperature Range: 0 to plus 180 deg F.
   4. Color: White.

2.5 SEALANTS

A. Joint Sealants:

1. See Editing Instruction No. 1 in the Evaluations for cautions about naming manufacturers and products. See Section 016000 "Product Requirements."
2. Materials shall be compatible with insulation materials, jackets, and substrates.
3. Permanently flexible, elastomeric sealant.
4. Service Temperature Range: Minus 100 to plus 300 deg F.
5. Color: White or gray.
6. For indoor applications, sealants shall have a VOC content of 420 g/L or less when calculated according to 40 CFR 59, Subpart D (EPA Method 24).
7. Sealants shall comply with the testing and product requirements of the California Department of Health Services' "Standard Practice for the Testing of Volatile Organic Emissions from Various Sources Using Small-Scale Environmental Chambers."

B. FSK and Metal Jacket Flashing Sealants:
1. Materials shall be compatible with insulation materials, jackets, and substrates.
2. Fire- and water-resistant, flexible, elastomeric sealant.
3. Service Temperature Range: Minus 40 to plus 250 deg F.
4. Color: Aluminum.
5. For indoor applications, sealants shall have a VOC content of 420 g/L or less when calculated according to 40 CFR 59, Subpart D (EPA Method 24).
6. Sealants shall comply with the testing and product requirements of the California Department of Health Services' "Standard Practice for the Testing of Volatile Organic Emissions from Various Sources Using Small-Scale Environmental Chambers."

C. ASJ Flashing Sealants, and Vinyl, PVDC, and PVC Jacket Flashing Sealants:
1. Materials shall be compatible with insulation materials, jackets, and substrates.
2. Fire- and water-resistant, flexible, elastomeric sealant.
3. Service Temperature Range: Minus 40 to plus 250 deg F.
4. Color: White.
5. For indoor applications, sealants shall have a VOC content of 420 g/L or less when calculated according to 40 CFR 59, Subpart D (EPA Method 24).
6. Sealants shall comply with the testing and product requirements of the California Department of Health Services' "Standard Practice for the Testing of Volatile Organic Emissions from Various Sources Using Small-Scale Environmental Chambers."

2.6 FACTORY-APPLIED JACKETS

A. Insulation system schedules indicate factory-applied jackets on various applications. When factory-applied jackets are indicated, comply with the following:
1. ASJ: White, kraft-paper, fiberglass-reinforced scrim with aluminum-foil backing; complying with ASTM C 1136, Type I.
2. ASJ-SSL: ASJ with self-sealing, pressure-sensitive, acrylic-based adhesive covered by a removable protective strip; complying with ASTM C 1136, Type I.
3. FSK Jacket: Aluminum-foil, fiberglass-reinforced scrim with kraft-paper backing; complying with ASTM C 1136, Type II.

2.7 TAPES

A. ASJ Tape: White vapor-retarder tape matching factory-applied jacket with acrylic adhesive, complying with ASTM C 1136.
1. Width: 3 inches.
2. Thickness: 11.5 mils.
3. Adhesion: 90 ounces force/inch in width.
4. Elongation: 2 percent.
5. Tensile Strength: 40 lbf/inch in width.
6. ASJ Tape Disks and Squares: Precut disks or squares of ASJ tape.

B. FSK Tape: Foil-face, vapor-retarder tape matching factory-applied jacket with acrylic adhesive; complying with ASTM C 1136.
1. Width: 3 inches.

2. Thickness: 6.5 mils.
3. Adhesion: 90 ounces force/inch in width.
4. Elongation: 2 percent.
5. Tensile Strength: 40 lbf/inch in width.
6. FSK Tape Disks and Squares: Precut disks or squares of FSK tape.

C. PVC Tape: White vapor-retarder tape matching field-applied PVC jacket with acrylic adhesive; suitable for indoor and outdoor applications.
1. Width: 2 inches.
2. Thickness: 6 mils.
3. Adhesion: 64 ounces force/inch in width.
4. Elongation: 500 percent.
5. Tensile Strength: 18 lbf/inch in width.

D. Aluminum-Foil Tape: Vapor-retarder tape with acrylic adhesive.
1. Width: 2 inches.
2. Thickness: 3.7 mils.
3. Adhesion: 100 ounces force/inch in width.
4. Elongation: 5 percent.
5. Tensile Strength: 34 lbf/inch in width.

2.8 SECUREMENTS

A. Bands:
1. Wing seals are primarily used for fastening bands together. Closed seals are occasionally used for large, 84-inch- (2130-mm-) diameter applications and where fastening bands are used with springs. Wing seals are reusable; closed seals are not.
2. Stainless Steel: ASTM A 167 or ASTM A 240/A 240M,; 0.015 inch thick, wide with .
3. Aluminum: ASTM B 209, Alloy 3003, 3005, 3105, or 5005; Temper H-14, 0.020 inch thick, wide with .

B. Staples: Outward-clinching insulation staples, nominal 3/4-inch-wide, stainless steel or Monel.

C. Wire: 0.080-inch nickel-copper alloy.

2.9 PROTECTIVE SHIELDING GUARDS

A. Protective Shielding Pipe Covers,:
1. Description: Manufactured plastic wraps for covering plumbing fixture hot- and cold-water supplies and trap and drain piping. Comply with Americans with Disabilities Act (ADA) requirements.

B. Protective Shielding Piping Enclosures,:
1. Description: Manufactured plastic enclosure for covering plumbing fixture hot- and cold-water supplies and trap and drain piping. Comply with ADA requirements.

PART 3 EXECUTION

3.1 EXAMINATION

A. Examine substrates and conditions for compliance with requirements for installation tolerances and other conditions affecting performance of insulation application.
1. Verify that systems to be insulated have been tested and are free of defects.
2. Verify that surfaces to be insulated are clean and dry.

B. Proceed with installation only after unsatisfactory conditions have been corrected.

3.2 PREPARATION

A. Surface Preparation: Clean and dry surfaces to receive insulation. Remove materials that will adversely affect insulation application.

B. Surface Preparation: Clean and prepare surfaces to be insulated. Before insulating, apply a corrosion coating to insulated surfaces as follows:
   1. Stainless Steel: Coat 300 series stainless steel with an epoxy primer 5 mils thick and an epoxy finish 5 mils thick if operating in a temperature range between 140 and 300 deg F. Consult coating manufacturer for appropriate coating materials and application methods for operating temperature range.
   2. Carbon Steel: Coat carbon steel operating at a service temperature between 32 and 300 deg F with an epoxy coating. Consult coating manufacturer for appropriate coating materials and application methods for operating temperature range.
C. Coordinate insulation installation with the trade installing heat tracing. Comply with requirements for heat tracing that apply to insulation.
D. Mix insulating cements with clean potable water; if insulating cements are to be in contact with stainless-steel surfaces, use demineralized water.

3.3 GENERAL INSTALLATION REQUIREMENTS

A. Install insulation materials, accessories, and finishes with smooth, straight, and even surfaces; free of voids throughout the length of piping including fittings, valves, and specialties.
B. Install insulation materials, forms, vapor barriers or retarders, jackets, and thicknesses required for each item of pipe system as specified in insulation system schedules.
C. Install accessories compatible with insulation materials and suitable for the service. Install accessories that do not corrode, soften, or otherwise attack insulation or jacket in either wet or dry state.
D. Install insulation with longitudinal seams at top and bottom of horizontal runs.
E. Install multiple layers of insulation with longitudinal and end seams staggered.
F. Do not weld brackets, clips, or other attachment devices to piping, fittings, and specialties.
G. Keep insulation materials dry during application and finishing.
H. Install insulation with tight longitudinal seams and end joints. Bond seams and joints with adhesive recommended by insulation material manufacturer.
I. Install insulation with least number of joints practical.
J. Where vapor barrier is indicated, seal joints, seams, and penetrations in insulation at hangers, supports, anchors, and other projections with vapor-barrier mastic.
   1. Install insulation continuously through hangers and around anchor attachments.
   2. For insulation application where vapor barriers are indicated, extend insulation on anchor legs from point of attachment to supported item to point of attachment to structure. Taper and seal ends at attachment to structure with vapor-barrier mastic.
   3. Install insert materials and install insulation to tightly join the insert. Seal insulation to insulation inserts with adhesive or sealing compound recommended by insulation material manufacturer.
   4. Cover inserts with jacket material matching adjacent pipe insulation. Install shields over jacket, arranged to protect jacket from tear or puncture by hanger, support, and shield.
K. Apply adhesives, mastics, and sealants at manufacturer's recommended coverage rate and wet and dry film thicknesses.
L. Install insulation with factory-applied jackets as follows:
   1. Draw jacket tight and smooth.
   2. Cover circumferential joints with 3-inch-wide strips, of same material as insulation jacket. Secure strips with adhesive and outward clinching staples along both edges of strip, spaced 4 inches o.c.
   3. Overlap jacket longitudinal seams at least 1-1/2 inches. Install insulation with longitudinal seams at bottom of pipe. Clean and dry surface to receive self-sealing lap. Staple laps with outward clinching staples along edge at o.c.
      a. For below-ambient services, apply vapor-barrier mastic over staples.
   4. Cover joints and seams with tape, according to insulation material manufacturer's written instructions, to maintain vapor seal.
   5. Where vapor barriers are indicated, apply vapor-barrier mastic on seams and joints and at ends adjacent to pipe flanges and fittings.
M. Cut insulation in a manner to avoid compressing insulation more than 75 percent of its nominal thickness.
N. Finish installation with systems at operating conditions. Repair joint separations and cracking due to thermal movement.

O. Repair damaged insulation facings by applying same facing material over damaged areas. Extend patches at least 4 inches beyond damaged areas. Adhere, staple, and seal patches similar to butt joints.

P. For above-ambient services, do not install insulation to the following:

1. Vibration-control devices.
2. Testing agency labels and stamps.
3. Nameplates and data plates.
4. Cleanouts.

3.4 PENETRATIONS

A. Insulation Installation at Roof Penetrations: Install insulation continuously through roof penetrations.

1. Seal penetrations with flashing sealant.
2. For applications requiring only indoor insulation, terminate insulation above roof surface and seal with joint sealant. For applications requiring indoor and outdoor insulation, install insulation for outdoor applications tightly joined to indoor insulation ends. Seal joint with joint sealant.
3. Extend jacket of outdoor insulation outside roof flashing at least 2 inches below top of roof flashing.
4. Seal jacket to roof flashing with flashing sealant.

B. Insulation Installation at Underground Exterior Wall Penetrations: Terminate insulation flush with sleeve seal. Seal terminations with flashing sealant.

C. Insulation Installation at Aboveground Exterior Wall Penetrations: Install insulation continuously through wall penetrations.

1. Seal penetrations with flashing sealant.
2. For applications requiring only indoor insulation, terminate insulation inside wall surface and seal with joint sealant. For applications requiring indoor and outdoor insulation, install insulation for outdoor applications tightly joined to indoor insulation ends. Seal joint with joint sealant.
3. Extend jacket of outdoor insulation outside wall flashing and overlap wall flashing at least 2 inches.
4. Seal jacket to wall flashing with flashing sealant.

D. Insulation Installation at Interior Wall and Partition Penetrations (That Are Not Fire Rated): Install insulation continuously through walls and partitions.

E. Insulation Installation at Fire-Rated Wall and Partition Penetrations: Install insulation continuously through penetrations of fire-rated walls and partitions.

1. Comply with requirements in Section 078413 "Penetration Firestopping" for firestopping and fire-resistive joint sealers.

F. Insulation Installation at Floor Penetrations:

1. Pipe: Install insulation continuously through floor penetrations.
2. Seal penetrations through fire-rated assemblies. Comply with requirements in Section 078413 "Penetration Firestopping."

3.5 GENERAL PIPE INSULATION INSTALLATION

A. Requirements in this article generally apply to all insulation materials except where more specific requirements are specified in various pipe insulation material installation articles.

B. Insulation Installation on Fittings, Valves, Strainers, Flanges, and Unions:

1. Install insulation over fittings, valves, strainers, flanges, unions, and other specialties with continuous thermal and vapor-retarder integrity unless otherwise indicated.
2. Insulate pipe elbows using preformed fitting insulation or mitered fittings made from same material and density as adjacent pipe insulation. Each piece shall be butted tightly against adjoining piece and bonded with adhesive. Fill joints, seams, voids, and irregular surfaces with insulating cement finished to a smooth, hard, and uniform contour that is uniform with adjoining pipe insulation.
3. Insulate tee fittings with preformed fitting insulation or sectional pipe insulation of same material and thickness as used for adjacent pipe. Cut sectional pipe insulation to fit. Butt each section closely to the next and hold in place with tie wire. Bond pieces with adhesive.
4. Insulate valves using preformed fitting insulation or sectional pipe insulation of same material, density, and thickness as used for adjacent pipe. Overlap adjoining pipe insulation by not less than two times the thickness of pipe insulation, or one pipe diameter, whichever is thicker. For valves, insulate up to and including the bonnets, valve stuffing-box studs, bolts, and nuts. Fill joints, seams, and irregular surfaces with insulating cement.

5. Insulate strainers using preformed fitting insulation or sectional pipe insulation of same material, density, and thickness as used for adjacent pipe. Overlap adjoining pipe insulation by not less than two times the thickness of pipe insulation, or one pipe diameter, whichever is thicker. Fill joints, seams, and irregular surfaces with insulating cement. Insulate strainers so strainer basket flange or plug can be easily removed and replaced without damaging the insulation and jacket. Provide a removable reusable insulation cover. For below-ambient services, provide a design that maintains vapor barrier.
6. Insulate flanges and unions using a section of oversized preformed pipe insulation. Overlap adjoining pipe insulation by not less than two times the thickness of pipe insulation, or one pipe diameter, whichever is thicker.
7. Cover segmented insulated surfaces with a layer of finishing cement and coat with a mastic. Install vapor-barrier mastic for below-ambient services and a breather mastic for above-ambient services. Reinforce the mastic with fabric-reinforcing mesh. Trowel the mastic to a smooth and well-shaped contour.
8. For services not specified to receive a field-applied jacket except for flexible elastomeric and polyolefin, install fitted PVC cover over elbows, tees, strainers, valves, flanges, and unions. Terminate ends with PVC end caps. Tape PVC covers to adjoining insulation facing using PVC tape.
9. Stencil or label the outside insulation jacket of each union with the word "union." Match size and color of pipe labels.

C. Insulate instrument connections for thermometers, pressure gages, pressure temperature taps, test connections, flow meters, sensors, switches, and transmitters on insulated pipes. Shape insulation at these connections by tapering it to and around the connection with insulating cement and finish with finishing cement, mastic, and flashing sealant.

D. Install removable insulation covers at locations indicated. Installation shall conform to the following:
1. Make removable flange and union insulation from sectional pipe insulation of same thickness as that on adjoining pipe. Install same insulation jacket as adjoining pipe insulation.
2. When flange and union covers are made from sectional pipe insulation, extend insulation from flanges or union long at least two times the insulation thickness over adjacent pipe insulation on each side of flange or union. Secure flange cover in place with stainless-steel or aluminum bands. Select band material compatible with insulation and jacket.
3. Construct removable valve insulation covers in same manner as for flanges, except divide the two-part section on the vertical center line of valve body.
4. When covers are made from block insulation, make two halves, each consisting of mitered blocks wired to stainless-steel fabric. Secure this wire frame, with its attached insulation, to flanges with tie wire. Extend insulation at least 2 inches over adjacent pipe insulation on each side of valve. Fill space between flange or union cover and pipe insulation with insulating cement. Finish cover assembly with insulating cement applied in two coats. After first coat is dry, apply and trowel second coat to a smooth finish.
5. Unless a PVC jacket is indicated in field-applied jacket schedules, finish exposed surfaces with a metal jacket.

3.6 INSTALLATION OF CELLULAR-GLASS INSULATION

A. Insulation Installation on Straight Pipes and Tubes:
1. Secure each layer of insulation to pipe with wire or bands and tighten bands without deforming insulation materials.
2. Where vapor barriers are indicated, seal longitudinal seams, end joints, and protrusions with vapor-barrier mastic and joint sealant.
3. For insulation with factory-applied jackets on above-ambient services, secure laps with outward clinched staples at 6 inches o.c.
4. For insulation with factory-applied jackets on below-ambient services, do not staple longitudinal tabs. Instead, secure tabs with additional adhesive as recommended by insulation material manufacturer and seal with vapor-barrier mastic and flashing sealant.

B. Insulation Installation on Pipe Flanges:
1. Install preformed pipe insulation to outer diameter of pipe flange.
2. Make width of insulation section same as overall width of flange and bolts, plus twice the thickness of pipe insulation.

3. Fill voids between inner circumference of flange insulation and outer circumference of adjacent straight pipe segments with cut sections of cellular-glass block insulation of same thickness as pipe insulation.
4. Install jacket material with manufacturer's recommended adhesive, overlap seams at least 1 inch, and seal joints with flashing sealant.

C. Insulation Installation on Pipe Fittings and Elbows:
1. Install preformed sections of same material as straight segments of pipe insulation when available. Secure according to manufacturer's written instructions.
2. When preformed sections of insulation are not available, install mitered sections of cellular-glass insulation. Secure insulation materials with wire or bands.

D. Insulation Installation on Valves and Pipe Specialties:
1. Install preformed sections of cellular-glass insulation to valve body.
2. Arrange insulation to permit access to packing and to allow valve operation without disturbing insulation.
3. Install insulation to flanges as specified for flange insulation application.

3.7 INSTALLATION OF FLEXIBLE ELASTOMERIC INSULATION

A. Seal longitudinal seams and end joints with manufacturer's recommended adhesive to eliminate openings in insulation that allow passage of air to surface being insulated.

B. Insulation Installation on Pipe Flanges:
1. Install pipe insulation to outer diameter of pipe flange.
2. Make width of insulation section same as overall width of flange and bolts, plus twice the thickness of pipe insulation.
3. Fill voids between inner circumference of flange insulation and outer circumference of adjacent straight pipe segments with cut sections of sheet insulation of same thickness as pipe insulation.
4. Secure insulation to flanges and seal seams with manufacturer's recommended adhesive to eliminate openings in insulation that allow passage of air to surface being insulated.

C. Insulation Installation on Pipe Fittings and Elbows:
1. Install mitered sections of pipe insulation.
2. Secure insulation materials and seal seams with manufacturer's recommended adhesive to eliminate openings in insulation that allow passage of air to surface being insulated.

D. Insulation Installation on Valves and Pipe Specialties:
1. Install preformed valve covers manufactured of same material as pipe insulation when available.
2. When preformed valve covers are not available, install cut sections of pipe and sheet insulation to valve body. Arrange insulation to permit access to packing and to allow valve operation without disturbing insulation.
3. Install insulation to flanges as specified for flange insulation application.
4. Secure insulation to valves and specialties and seal seams with manufacturer's recommended adhesive to eliminate openings in insulation that allow passage of air to surface being insulated.

3.8 INSTALLATION OF MINERAL-FIBER INSULATION

A. Insulation Installation on Straight Pipes and Tubes:
1. Secure each layer of preformed pipe insulation to pipe with wire or bands and tighten bands without deforming insulation materials.
2. Where vapor barriers are indicated, seal longitudinal seams, end joints, and protrusions with vapor-barrier mastic and joint sealant.
3. For insulation with factory-applied jackets on above-ambient surfaces, secure laps with outward clinched staples at 6 inches o.c.
4. For insulation with factory-applied jackets on below-ambient surfaces, do not staple longitudinal tabs. Instead, secure tabs with additional adhesive as recommended by insulation material manufacturer and seal with vapor-barrier mastic and flashing sealant.

B. Insulation Installation on Pipe Flanges:
1. Install preformed pipe insulation to outer diameter of pipe flange.
2. Make width of insulation section same as overall width of flange and bolts, plus twice the thickness of pipe insulation.

3. Fill voids between inner circumference of flange insulation and outer circumference of adjacent straight pipe segments with mineral-fiber blanket insulation.
4. Install jacket material with manufacturer's recommended adhesive, overlap seams at least 1 inch, and seal joints with flashing sealant.

C. Insulation Installation on Pipe Fittings and Elbows:
1. Install preformed sections of same material as straight segments of pipe insulation when available.
2. When preformed insulation elbows and fittings are not available, install mitered sections of pipe insulation, to a thickness equal to adjoining pipe insulation. Secure insulation materials with wire or bands.

D. Insulation Installation on Valves and Pipe Specialties:
1. Install preformed sections of same material as straight segments of pipe insulation when available.
2. When preformed sections are not available, install mitered sections of pipe insulation to valve body.
3. Arrange insulation to permit access to packing and to allow valve operation without disturbing insulation.
4. Install insulation to flanges as specified for flange insulation application.

3.9 INSTALLATION OF PHENOLIC INSULATION

A. General Installation Requirements:
1. Secure single-layer insulation with stainless-steel bands at 12-inch intervals and tighten bands without deforming insulation materials.
2. Install 2-layer insulation with joints tightly butted and staggered at least 3 inches. Secure inner layer with 0.062-inch wire spaced at 12-inch intervals. Secure outer layer with stainless-steel bands at 12-inch intervals.

B. Insulation Installation on Straight Pipes and Tubes:
1. Secure each layer of insulation to pipe with wire or bands and tighten bands without deforming insulation materials.
2. Where vapor barriers are indicated, seal longitudinal seams, end joints, and protrusions with vapor-barrier mastic and joint sealant.
3. For insulation with factory-applied jackets on above-ambient services, secure laps with outward clinched staples at 6 inches o.c.
4. For insulation with factory-applied jackets with vapor retarders on below-ambient services, do not staple longitudinal tabs. Instead, secure tabs with additional adhesive as recommended by insulation material manufacturer and seal with vapor-barrier mastic and flashing sealant.

C. Insulation Installation on Pipe Flanges:
1. Install preformed pipe insulation to outer diameter of pipe flange.
2. Make width of insulation section same as overall width of flange and bolts, plus twice the thickness of pipe insulation.
3. Fill voids between inner circumference of flange insulation and outer circumference of adjacent straight pipe segments with cut sections of block insulation of same material and thickness as pipe insulation.

D. Insulation Installation on Pipe Fittings and Elbows:
1. Install preformed insulation sections of same material as straight segments of pipe insulation. Secure according to manufacturer's written instructions.

E. Insulation Installation on Valves and Pipe Specialties:
1. Install preformed insulation sections of same material as straight segments of pipe insulation. Secure according to manufacturer's written instructions.
2. Arrange insulation to permit access to packing and to allow valve operation without disturbing insulation.
3. Install insulation to flanges as specified for flange insulation application.

3.10 FINISHES

A. Insulation with ASJ, Glass-Cloth, or Other Paintable Jacket Material: Paint jacket with paint system identified below and as specified in Section 099113 "Exterior Painting" and Section 099123 "Interior Painting."

1. Flat Acrylic Finish: Two finish coats over a primer that is compatible with jacket material and finish coat paint. Add fungicidal agent to render fabric mildew proof.
    a. Finish Coat Material: Interior, flat, latex-emulsion size.

B. Flexible Elastomeric Thermal Insulation: After adhesive has fully cured, apply two coats of insulation manufacturer's recommended protective coating.

C. Color: Final color as selected by Architect. Vary first and second coats to allow visual inspection of the completed Work.

D. Do not field paint aluminum or stainless-steel jackets.

3.11 FIELD QUALITY CONTROL

A. Testing Agency: Engage a qualified testing agency to perform tests and inspections.

B. Perform tests and inspections.

C. Tests and Inspections:
1. Inspect pipe, fittings, strainers, and valves, randomly selected by Architect, by removing field-applied jacket and insulation in layers in reverse order of their installation. Extent of inspection shall be limited to locations of straight pipe, locations of threaded fittings, locations of welded fittings, locations of threaded strainers, locations of welded strainers, locations of threaded valves, and locations of flanged valves for each pipe service defined in the "Piping Insulation Schedule, General" Article.

D. All insulation applications will be considered defective Work if sample inspection reveals noncompliance with requirements.

3.12 PIPING INSULATION SCHEDULE, GENERAL

A. Acceptable preformed pipe and tubular insulation materials and thicknesses are identified for each piping system and pipe size range. If more than one material is listed for a piping system, selection from materials listed is Contractor's option.

B. Items Not Insulated: Unless otherwise indicated, do not install insulation on the following:
1. Drainage piping located in crawl spaces.
2. Underground piping.
3. Chrome-plated pipes and fittings unless there is a potential for personnel injury.

3.13 INDOOR PIPING INSULATION SCHEDULE

A. Domestic Cold Water:
1. NPS 1 and Smaller: Insulation shall be one of the following:
    a. Cellular Glass: 1-1/2 inches thick.
    b. Flexible Elastomeric: 3/4 inch thick.
    c. Mineral-Fiber, Preformed Pipe Insulation, Type I: 1 inch thick.
2. ???Insert pipe size??? and Larger: Insulation shall be the following:
    a. Cellular Glass: 1-1/2 inches thick.
    b. Flexible Elastomeric: 1 inch thick.
    c. Mineral-Fiber, Preformed Pipe Insulation, Type I: 1 inch thick.

B. Domestic Hot and Recirculated Hot Water:
1. NPS 1-1/4 and Smaller: Insulation shall be one of the following:
    a. Cellular Glass: 1-1/2 inches thick.
    b. Flexible Elastomeric: 3/4 inch thick.
    c. Mineral-Fiber, Preformed Pipe Insulation, Type I: 1 inch thick.
2. NPS 1-1/2 and Larger: Insulation shall be one of the following:
    a. Cellular Glass: 1-1/2 inches thick.
    b. Flexible Elastomeric: 1 inch thick.
    c. Mineral-Fiber, Preformed Pipe Insulation, Type I: 1 inch thick.

C. Domestic Chilled Water (Potable):
1. All Pipe Sizes: Insulation shall be one of the following:
    a. Cellular Glass: 1-1/2 inches thick.

b. Flexible Elastomeric: 1 inch thick.

c. Mineral-Fiber, Preformed Pipe Insulation, Type I: 1 inch thick.

D. Floor Drains, Traps, and Sanitary Drain Piping within 10 Feet of Drain Receiving Condensate and Equipment Drain Water below 60 Deg F:

1. All Pipe Sizes: Insulation shall be one of the following:

a. Cellular Glass: 1-1/2 inches thick.

b. Flexible Elastomeric: 3/4 inch thick.

c. Mineral-Fiber, Preformed Pipe Insulation, Type I: 1 inch thick.

E. Hot Service Drains:

1. All Pipe Sizes: Insulation shall be one of the following:

a. Cellular Glass: 1-1/2 inches thick.

b. Mineral-Fiber, Preformed Pipe, Type I or II: 1 inch thick.

F. Hot Service Vents:

1. All Pipe Sizes: Insulation shall be one of the following:

a. Cellular Glass: 1-1/2 inches thick.

b. Mineral-Fiber, Preformed Pipe, Type I or II: 1 inch thick.

END OF SECTION

SECTION 220800 - COMMISSIONING OF PLUMBING EQUIPMENT

PART 1 GENERAL

1.1 SUMMARY

A. Section Includes:
   1. Plumbing commissioning description.
   2. Plumbing commissioning responsibilities.
B. Related Sections:
   1. Section 01 91 00 – General Commissioning Requirements

1.2 REFERENCES

A. Associated Air Balance Council:
   1. AABC - AABC Commissioning Guideline.

1.3 COMMISSIONING DESCRIPTION

A. Plumbing commissioning process includes the following tasks:
   1. Testing and startup of Plumbing equipment and systems.
   2. Equipment and system verification checks.
   3. Assistance in functional performance testing to verify testing and balancing, and equipment and system performance.
   4. Provide qualified personnel to assist in commissioning tests, including seasonal testing.
   5. Complete and endorse functional performance test checklists provided by Commissioning Authority to assure equipment and systems are fully operational and ready for functional performance testing.
   6. Provide equipment, materials, and labor necessary to correct deficiencies found during commissioning process to fulfill contract and warranty requirements.
   7. Provide operation and maintenance information and record drawings to Commissioning Authority for review verification and organization, prior to distribution.
   8. Provide assistance to Commissioning Authority to develop, edit, and document system operation descriptions.
   9. Provide training for systems specified in this Section with coordination by Commissioning Authority.
B. Equipment and Systems to Be Commissioned:
   1. Refer to Commissioning Plan

1.4 COMMISSIONING SUBMITTALS

A. Section 01 91 00 - Commissioning: Requirements for commissioning submittals.
B. Draft Forms: Draft forms of the system verification forms and the functional performance test checklist will be produced and issued as part of the Commissioning Plan by the Commissioning Authority.
C. Test Reports: Indicate data on system verification form for each piece of equipment and system as specified. Use forms provided by the Commissioning Authority as guidelines.
D. Field Reports: Indicate deficiencies preventing completion of equipment or system verification checks equipment or system to achieve specified performance. Deficiencies should be reported to the General Contractor, Owner, Architect/Engineer, and Commissioning Authority.

1.5 CLOSEOUT SUBMITTALS

A. Section 01 70 00 - Execution and Closeout Requirements: Requirements for submittals.
B. Project Record Documents: Record revisions to equipment and system documentation necessitated by commissioning.
C. Operation and Maintenance Data: Submit revisions to operation and maintenance manuals when necessary revisions are discovered during commissioning.

1.6 COMMISSIONING RESPONSIBILITIES

A. Equipment or System Installer Commissioning Responsibilities:
   1. Attend commissioning meetings.
   2. Ensure controls installer performs assigned commissioning responsibilities as specified below.
   3. Ensure testing, adjusting, and balancing agency performs assigned commissioning responsibilities as specified.
   4. Provide instructions and demonstrations for Owner's personnel.
   5. Ensure subcontractors perform assigned commissioning responsibilities.
   6. Ensure participation of equipment manufacturers in appropriate startup, testing, and training activities when required by individual equipment specifications.
   7. Develop startup and initial checkout plan using manufacturer’s startup procedures and functional performance checklists for equipment and systems to be commissioned.
   8. During verification check and startup process, execute portions of checklists for equipment and systems to be commissioned.
   9. Perform and document completed startup and system operational checkout procedures, providing copy to Commissioning Authority.
   10. Provide manufacturer’s representatives to execute starting of equipment. Ensure representatives are available and present during agreed upon schedules and are in attendance for duration to complete tests, adjustments and problem-solving.
   11. Coordinate with equipment manufacturers to determine specific requirements to maintain validity of warranties.
   12. Provide personnel to assist Commissioning Authority during equipment or system verification checks and functional performance tests.
   13. Prior to functional performance tests, review test procedures to ensure feasibility, safety and equipment protection and provide necessary written alarm limits to be used during tests.
   14. Prior to startup, inspect, check, and verify correct and complete installation of equipment and system components for verification checks included in commissioning plan. When deficient or incomplete work is discovered, ensure corrective action is taken and re-check until equipment or system is ready for startup.
   15. Provide factory supervised startup services for equipment and systems. Coordinate work with manufacturer and Commissioning Authority.
   16. Perform verification checks and startup on equipment and systems as specified.
   17. Assist Commissioning Authority in performing functional performance tests on equipment and systems as specified.
   18. Perform operation and maintenance training sessions scheduled by Commissioning Authority.
   19. Conduct system orientation and inspection.

B. Controls Installer Commissioning Responsibilities:
   1. Attend commissioning meetings.
   2. Review design for ability of systems to be controlled including the following:
      a. Confirm that all of the proper hardware which is required exists to perform functional performance testing.
      b. Confirm proper safeties and interlocks are included in design.
      c. Confirm proper sizing of system control valves and actuators and control valve operation will result capacity control identified in Contract Documents.
      d. Confirm sensors selected are within device ranges.
      e. Review sequences of operation and obtain clarification from Architect/Engineer.
      f. Indicate delineation of control between packaged controls and building automation system, listing BAS monitor points and BAS adjustable control points.
      g. Provide written sequences of operation for packaged controlled equipment. Equipment manufacturers’ stock sequences may be included, when accompanied by additional narrative to reflect Project conditions.
   3. Inspect, check, and confirm proper operation and performance of control hardware and software provided in other plumbing sections.
   4. Submit proposed procedures for performing control system point-to-point checks to Commissioning Authority and Architect/Engineer.

5. Inspect check and confirm correct installation and operation of automatic temperature control system input and output device operation through point-to-point checks.
6. Perform training sessions to instruct Owner's personnel in hardware operation, software operation, programming, and application in accordance with commissioning plan and requirements of Section 01 91 00.
7. Demonstrate system performance and operation to Commissioning Authority during functional performance tests including each mode of operation.
8. Provide control system technician to assist during Commissioning Authority verification check and functional performance testing.
9. Assist in performing operation and maintenance training sessions scheduled by Commissioning Authority.

1.7 COMMISSIONING MEETINGS

A. Section 01 91 00 - Commissioning: Requirements for commissioning meetings.
B. Attend initial commissioning meeting and progress commissioning meetings as required by Commissioning Authority.

1.8 SCHEDULING

A. Section 01 30 00 - Administrative Requirements and 01 32 16 - Construction Progress Schedule: Requirements for scheduling.
B. Contractor to prepare schedule indicating anticipated start dates for the following:
   1. Piping system pressure testing.
   2. Piping system flushing and cleaning.
   3. Equipment and system startups.
   4. Control system checkout.
   5. Testing and adjusting.
   6. Plumbing system orientation and inspections.
   7. Operation and maintenance manual submittals.
   8. Training sessions.
C. Schedule seasonal tests of equipment and systems during peak weather conditions to observe full-load performance.
D. Schedule occupancy sensitive tests of equipment and systems during conditions of both minimum and maximum occupancy and use.

1.9 COORDINATION

A. Section 01 30 00 - Administrative Requirements: Requirements for coordination.
B. Notify Commissioning Authority minimum of 3 weeks in advance of the following:
   1. Scheduled equipment and system startups.
   2. Scheduled control system checkout.
   3. Scheduled start of testing, adjusting, and balancing work.
C. Coordinate programming of automatic temperature control system with construction and commissioning schedules.

PART 2 PRODUCTS

2.1 NOT USED.

PART 3 EXECUTION

3.1 INSTALLATION

A. Install additional balancing valves, access doors, test ports, and pressure and temperature taps required to provide a complete and balanced system in accordance with the Contract Documents.

B. Place plumbing systems and equipment into full operation and continue operation during each working day of commissioning.

3.2 COMMISSIONING

A. Functional Performance Tests:
   1. Test equipment at winter design temperatures.
   2. Test equipment at summer design temperatures with fully occupied building.
   3. Participate in testing delayed beyond Final Completion to test performance at peak seasonal conditions.

B. Be responsible to participate in initial and alternate peak season test of systems required to demonstrate performance.

C. Warranty Period Re-Commissioning:
   1. 1. Return to site minimum (8) eight months after Substantial Completion and before the expiration of correction / warranty period.
      a. Review current equipment and system operation and condition of outstanding issues related to original and seasonal commissioning with Owner's personnel.
      b. Interview Owner's personnel to identify problems or concerns regarding equipment and system operation.
      c. Make suggestions for improvements and for recording changes in operation and maintenance manuals.
      d. Identify deficiencies covered by warranty or original construction contract.
      e. Assist Owner's personnel to develop reports, documents and requests for services to remedy outstanding problems.

END OF SECTION

SECTION 221113 - FACILITY WATER DISTRIBUTION PIPING

PART 1 GENERAL

1.1 RELATED DOCUMENTS

A. Drawings and general provisions of the Contract, including General and Supplementary Conditions and Division 01 Specification Sections, apply to this Section.

1.2 SUMMARY

A. This Section includes water-distribution piping and related components outside the building for water service.
B. Utility-furnished products include water meters that will be furnished to the site, ready for installation.

1.3 DEFINITIONS

A. EPDM: Ethylene propylene diene terpolymer rubber.
B. LLDPE: Linear, low-density polyethylene plastic.
C. PA: Polyamide (nylon) plastic.
D. PE: Polyethylene plastic.
E. PP: Polypropylene plastic.
F. PVC: Polyvinyl chloride plastic.
G. RTRF: Reinforced thermosetting resin (fiberglass) fittings.
H. RTRP: Reinforced thermosetting resin (fiberglass) pipe.

1.4 ACTION SUBMITTALS

A. Product Data: For each type of product indicated.
B. Shop Drawings: Detail precast concrete vault assemblies and indicate dimensions, method of field assembly, and components.
    1. Wiring Diagrams: Power, signal, and control wiring for alarms.

1.5 INFORMATIONAL SUBMITTALS

A. Coordination Drawings: For piping and specialties including relation to other services in same area, drawn to scale. Show piping and specialty sizes and valves, meter and specialty locations, and elevations.
B. Field quality-control test reports.

1.6 CLOSEOUT SUBMITTALS

A. Operation and Maintenance Data: For water valves and specialties to include in emergency, operation, and maintenance manuals.

1.7 QUALITY ASSURANCE

A. Regulatory Requirements:
    1. Comply with requirements of utility company supplying water. Include tapping of water mains and backflow prevention.
    2. Comply with standards of authorities having jurisdiction for potable-water-service piping, including materials, installation, testing, and disinfection.
    3. Comply with standards of authorities having jurisdiction for fire-suppression water-service piping, including materials, hose threads, installation, and testing.
B. Piping materials shall bear label, stamp, or other markings of specified testing agency.
C. Electrical Components, Devices, and Accessories: Listed and labeled as defined in NFPA 70, Article 100, by a testing agency acceptable to authorities having jurisdiction, and marked for intended use.
D. Comply with ASTM F645 for selection, design, and installation of thermoplastic water piping.

E. Comply with FMG's "Approval Guide" or UL's "Fire Protection Equipment Directory" for fire-service-main products.

F. NFPA Compliance: Comply with NFPA 24 for materials, installations, tests, flushing, and valve and hydrant supervision for fire-service-main piping for fire suppression.

1. Potable-water piping and components shall comply with NSF 14, NSF 61, and NSF 372.

1.8 DELIVERY, STORAGE, AND HANDLING

A. Preparation for Transport: Prepare valves, including fire hydrants, according to the following:

1. Ensure that valves are dry and internally protected against rust and corrosion.
2. Protect valves against damage to threaded ends and flange faces.
3. Set valves in best position for handling. Set valves closed to prevent rattling.

B. During Storage: Use precautions for valves, including fire hydrants, according to the following:

1. Do not remove end protectors unless necessary for inspection; then reinstall for storage.
2. Protect from weather. Store indoors and maintain temperature higher than ambient dew-point temperature. Support off the ground or pavement in watertight enclosures when outdoor storage is necessary.

C. Handling: Use sling to handle valves and fire hydrants if size requires handling by crane or lift. Rig valves to avoid damage to exposed parts. Do not use handwheels or stems as lifting or rigging points.

D. Deliver piping with factory-applied end caps. Maintain end caps through shipping, storage, and handling to prevent pipe-end damage and to prevent entrance of dirt, debris, and moisture.

E. Protect stored piping from moisture and dirt. Elevate above grade. Do not exceed structural capacity of floor when storing inside.

F. Protect flanges, fittings, and specialties from moisture and dirt.

G. Store plastic piping protected from direct sunlight. Support to prevent sagging and bending.

1.9 PROJECT CONDITIONS

A. Interruption of Existing Water-Distribution Service: Do not interrupt service to facilities occupied by Owner or others unless permitted under the following conditions and then only after arranging to provide temporary water-distribution service according to requirements indicated:

1. Notify Owner no fewer than two days in advance of proposed interruption of service.
2. Do not proceed with interruption of water-distribution service without Owner’s written permission.

1.10 COORDINATION

A. Coordinate connection to water main with utility company.

PART 2 PRODUCTS

2.1 PIPING MATERIALS

A. Comply with requirements in "Piping Application" Article for applications of pipe, tube, fitting materials, and joining methods for specific services, service locations, and pipe sizes.

B. Potable-water piping and components shall comply with NSF 14, NSF 61, and NSF 372.Include marking "NSF-pw" on piping.

2.2 PE PIPE AND FITTINGS

A. PE, ASTM Pipe: ASTM D2239, SIDR No. 5.3, 7, or 9; with PE compound number required to give pressure rating not less than [160 psig (1100 kPa)] [200 psig (1380 kPa)].

1. Insert Fittings for PE Pipe: ASTM D2609, made of PA, PP, or PVC with serrated male insert ends matching inside of pipe. Include bands or crimp rings.
2. Molded PE Fittings: ASTM D3350, PE resin, socket- or butt-fusion type, made to match PE pipe dimensions and class.

B. PE, AWWA Pipe: AWWA C906, DR No. 7.3, 9, or 9.3; with PE compound number required to give pressure rating not less than [160 psig (1100 kPa)] [200 psig (1380 kPa)].

1. PE, AWWA Fittings: AWWA C906, socket- or butt-fusion type, with DR number matching pipe and PE compound number required to give pressure rating not less than [160 psig (1100 kPa)] [200 psig (1380 kPa)].

C. PE, Fire-Service Pipe: ASTM F714, AWWA C906, or equivalent for PE water pipe; FMG approved, with minimum thickness equivalent to FMG [Class 150] [and] [Class 200].

1. Molded PE Fittings: ASTM D3350, PE resin, socket- or butt-fusion type, made to match PE pipe dimensions and class.

2.3 PVC PIPE AND FITTINGS

A. PVC, Schedule 40 Pipe: ASTM D1785.

1. PVC, Schedule 40 Socket Fittings: ASTM D2466.

B. PVC, Schedule 80 Pipe: ASTM D1785.

1. PVC, Schedule 80 Socket Fittings: ASTM D2467.
2. PVC, Schedule 80 Threaded Fittings: ASTM D2464.

C. PVC, AWWA Pipe: AWWA C900, [Class 150] [and] [Class 200], with bell end with gasket, and with spigot end.

1. Comply with UL 1285 for fire-service mains if indicated.
2. PVC Fabricated Fittings: AWWA C900, [Class 150] [and] [Class 200], with bell-and-spigot or double-bell ends. Include elastomeric gasket in each bell.
3. PVC Molded Fittings: AWWA C907, Class 150, with bell-and-spigot or double-bell ends. Include elastomeric gasket in each bell.
4. Push-on-Joint, Ductile-Iron Fittings: AWWA C110, ductile- or gray-iron standard pattern or AWWA C153, ductile-iron compact pattern.
   a. Gaskets: AWWA C111, rubber.
5. Mechanical-Joint, Ductile-Iron Fittings: AWWA C110, ductile- or gray-iron standard pattern or AWWA C153, ductile-iron compact pattern.
   a. Glands, Gaskets, and Bolts: AWWA C111, ductile- or gray-iron glands, rubber gaskets, and steel bolts.

2.4 FIBERGLASS PIPE AND FITTINGS

A. AWWA RTRP: AWWA C950, [Class 150] [Class 200] [and] [Class 250], Type I[or II], [Grade 1, epoxy] [or] [Grade 2, polyester], with bell-and-spigot ends [for bonded] [with gasket or seal for gasketed] joints. Liner is optional, unless otherwise indicated.[Include FMG approval if used for fire-service mains.]

1. RTRF: AWWA C950, similar to pipe in material, pressure class, and joining method.

B. UL RTRP: UL 1713, [Class 150] [Class 200] [and] [Class 250], with bell-and-spigot ends with gasket or seal for gasketed joints. Liner is optional, unless otherwise indicated.

1. RTRF: Similar to pipe in material, pressure class, and joining method.

2.5 SPECIAL PIPE FITTINGS

A. Ductile-Iron Rigid Expansion Joints:

1. Description: Three-piece, ductile-iron assembly consisting of telescoping sleeve with gaskets and restrained-type, ductile-iron, bell-and-spigot end sections complying with AWWA C110 or AWWA C153. Select and assemble components for expansion indicated. Include AWWA C111, ductile-iron glands, rubber gaskets, and steel bolts.
   a. Pressure Rating: 250 psig (1725 kPa) minimum.
   b. Expansion Required: ???Insert inches (mm)???.

B. Ductile-Iron Flexible Expansion Joints:

1. Description: Compound, ductile-iron fitting with combination of flanged and mechanical-joint ends complying with AWWA C110 or AWWA C153. Include two gasketed ball-joint sections and one or more gasketed sleeve sections. Assemble components for offset and expansion indicated. Include AWWA C111, ductile-iron glands, rubber gaskets, and steel bolts.
   a. Pressure Rating: 250 psig (1725 kPa) minimum.
   b. Offset: ???Insert inches (mm)???.
   c. Expansion Required: ???Insert inches (mm)???.

C. Ductile-Iron Deflection Fittings:
   1. Description: Compound, ductile-iron coupling fitting with sleeve and 1 or 2 flexing sections for up to 15-degree deflection, gaskets, and restrained-joint ends complying with AWWA C110 or AWWA C153. Include AWWA C111, ductile-iron glands, rubber gaskets, and steel bolts.
      a. Pressure Rating: 250 psig (1725 kPa) minimum.

2.6 JOINING MATERIALS

A. Refer to Section 330500 "Common Work Results for Utilities" for commonly used joining materials.
B. Brazing Filler Metals: AWS A5.8, BCuP Series.
C. Bonding Adhesive for Fiberglass Piping: As recommended by fiberglass piping manufacturer.
D. Plastic Pipe-Flange Gasket, Bolts, and Nuts: Type and material recommended by piping system manufacturer, unless otherwise indicated.

2.7 PIPING SPECIALTIES

A. Transition Fittings: Manufactured fitting or coupling same size as, with pressure rating at least equal to and ends compatible with, piping to be joined.
B. Tubular-Sleeve Pipe Couplings:
   1. Description: Metal, bolted, sleeve-type, reducing or transition coupling, with center sleeve, gaskets, end rings, and bolt fasteners and with ends of same sizes as piping to be joined.
      a. Standard: AWWA C219.
      b. Center-Sleeve Material: [Manufacturer's standard] [Carbon steel] [Stainless steel] [Ductile iron] [Malleable iron].
      c. Gasket Material: Natural or synthetic rubber.
      d. Pressure Rating: [150 psig (1035 kPa)] [200 psig (1380 kPa)] ???Insert pressure??? minimum.
      e. Metal Component Finish: Corrosion-resistant coating or material.
C. Split-Sleeve Pipe Couplings:
   1. Description: Metal, bolted, split-sleeve-type, reducing or transition coupling with sealing pad and closure plates, O-ring gaskets, and bolt fasteners.
      a. Standard: AWWA C219.
      b. Sleeve Material: [Manufacturer's standard] [Carbon steel] [Stainless steel].
      c. Sleeve Dimensions: Of thickness and width required to provide pressure rating.
      d. Gasket Material: O-rings made of EPDM rubber, unless otherwise indicated.
      e. Pressure Rating: [150 psig (1035 kPa)] [200 psig (1380 kPa)] ???Insert pressure??? minimum.
      f. Metal Component Finish: Corrosion-resistant coating or material.
D. Flexible Connectors:
   1. Nonferrous-Metal Piping: Bronze hose covered with bronze wire braid; with copper-tube, pressure-type, solder-joint ends or bronze flanged ends brazed to hose.
   2. Ferrous-Metal Piping: Stainless-steel hose covered with stainless-steel wire braid; with ASME B1.20.1, threaded steel pipe nipples or ASME B16.5, steel pipe flanges welded to hose.
E. Dielectric Fittings:
   1. General Requirements: Assembly of copper alloy and ferrous materials with separating nonconductive insulating material. Include end connections compatible with pipes to be joined.
   2. Dielectric Unions:
      a. Description:
         1) Standard: ASSE 1079.
         2) Pressure Rating: [125 psig (860 kPa) minimum at 180 deg F (82 deg C)] [150 psig (1035 kPa)] [250 psig (1725 kPa)].
         3) End Connections: Solder-joint copper alloy and threaded ferrous.
   3. Dielectric Flanges:
      a. Description:
         1) Standard: ASSE 1079.
         2) Factory-fabricated, bolted, companion-flange assembly.

3) Pressure Rating: [125 psig (860 kPa) minimum at 180 deg F (82 deg C)] [150 psig (1035 kPa)] [175 psig (1200 kPa)] [300 psig (2070 kPa)].
4) End Connections: Solder-joint copper alloy and threaded ferrous; threaded solder-joint copper alloy and threaded ferrous.

4. Dielectric-Flange Insulating Kits:
   a. Description:
      1) Nonconducting materials for field assembly of companion flanges.
      2) Pressure Rating: [150 psig (1035 kPa)] ???Insert pressure???.
      3) Gasket: Neoprene or phenolic.
      4) Bolt Sleeves: Phenolic or polyethylene.
      5) Washers: Phenolic with steel backing washers.
5. Dielectric Nipples:
   a. Description:
      1) Standard: IAPMO PS 66.
      2) Electroplated steel nipple complying with ASTM F1545.
      3) Pressure Rating: [300 psig (2070 kPa) at 225 deg F (107 deg C)] ???Insert pressure and temperature???.
      4) End Connections: Male threaded or grooved.
      5) Lining: Inert and noncorrosive, propylene.

2.8 CORROSION-PROTECTION PIPING ENCASEMENT

A. Encasement for Underground Metal Piping:
1. Standards: ASTM A674 or AWWA C105.
2. Form: [Sheet] [Sheet or tube] [Tube].
3. Material: LLDPE film of 0.008-inch (0.20-mm) minimum thickness.
4. Material: LLDPE film of 0.008-inch (0.20-mm) minimum thickness, or high-density, crosslaminated PE film of 0.004-inch (0.10-mm) minimum thickness.
5. Material: High-density, crosslaminated PE film of 0.004-inch (0.10-mm) minimum thickness.
6. Color: [Black] [Natural] ???Insert color???.

2.9 GATE VALVES

A. AWWA, Cast-Iron Gate Valves:
1. Nonrising-Stem, Metal-Seated Gate Valves:
   a. Description: Gray- or ductile-iron body and bonnet; with cast-iron or bronze double-disc gate, bronze gate rings, bronze stem, and stem nut.
      1) Standard: AWWA C500.
      2) Minimum Pressure Rating: 200 psig (1380 kPa).
      3) End Connections: Mechanical joint.
      4) Interior Coating: Complying with AWWA C550.
2. Nonrising-Stem, Resilient-Seated Gate Valves:
   a. Description: Gray- or ductile-iron body and bonnet; with bronze or gray- or ductile-iron gate, resilient seats, bronze stem, and stem nut.
      1) Standard: AWWA C509.
      2) Minimum Pressure Rating: 200 psig (1380 kPa).
      3) End Connections: Mechanical joint.
      4) Interior Coating: Complying with AWWA C550.
3. Nonrising-Stem, High-Pressure, Resilient-Seated Gate Valves:
   a. Description: Ductile-iron body and bonnet; with bronze or ductile-iron gate, resilient seats, bronze stem, and stem nut.
      1) Standard: AWWA C509.
      2) Minimum Pressure Rating: 250 psig (1725 kPa).
      3) End Connections: Push on or mechanical joint.
      4) Interior Coating: Complying with AWWA C550.
4. OS&Y, Rising-Stem, Metal-Seated Gate Valves:

a. Description: Cast- or ductile-iron body and bonnet, with cast-iron double disc, bronze disc and seat rings, and bronze stem.
1) Standard: AWWA C500.
2) Minimum Pressure Rating: 200 psig (1380 kPa).
3) End Connections: Flanged.

5. OS&Y, Rising-Stem, Resilient-Seated Gate Valves:
a. Description: Cast- or ductile-iron body and bonnet, with bronze or gray- or ductile-iron gate, resilient seats, and bronze stem.
1) Standard: AWWA C509.
2) Minimum Pressure Rating: 200 psig (1380 kPa).
3) End Connections: Flanged.

B. UL/FMG, Cast-Iron Gate Valves:
1. UL/FMG, Nonrising-Stem Gate Valves:
a. Description: Iron body and bonnet with flange for indicator post, bronze seating material, and inside screw.
1) Standards: UL 262 and FMG approved.
2) Minimum Pressure Rating: 175 psig (1207 kPa).
3) End Connections: Flanged.

2. OS&Y, Rising-Stem Gate Valves:
a. Description: Iron body and bonnet and bronze seating material.
1) Standards: UL 262 and FMG approved.
2) Minimum Pressure Rating: 175 psig (1207 kPa).
3) End Connections: Flanged.

C. Bronze Gate Valves:
1. OS&Y, Rising-Stem Gate Valves:
a. Description: Bronze body and bonnet and bronze stem.
1) Standards: UL 262 and FMG approved.
2) Minimum Pressure Rating: 175 psig (1207 kPa).
3) End Connections: Threaded.

2. Nonrising-Stem Gate Valves:
a. Description: Class 125, Type 1, bronze with solid wedge, threaded ends, and malleable-iron handwheel.
1) Standard: MSS SP-80.

2.10 GATE VALVE ACCESSORIES AND SPECIALTIES

A. Tapping-Sleeve Assemblies:
1. Description: Sleeve and valve compatible with drilling machine.
a. Standard: MSS SP-60.
b. Tapping Sleeve: Cast- or ductile-iron or stainless-steel, two-piece bolted sleeve with flanged outlet for new branch connection. Include sleeve matching size and type of pipe material being tapped and with recessed flange for branch valve.
c. Valve: AWWA, cast-iron, nonrising-stem, [metal] [resilient]-seated gate valve with one raised face flange mating tapping-sleeve flange.

B. Valve Boxes: Comply with AWWA M44 for cast-iron valve boxes. Include top section, adjustable extension of length required for depth of burial of valve, plug with lettering "WATER," and bottom section with base that fits over valve and with a barrel approximately 5 inches (125 mm) in diameter.
1. Operating Wrenches: Steel, tee-handle with one pointed end, stem of length to operate deepest buried valve, and socket matching valve operating nut.

C. Indicator Posts: UL 789, FMG-approved, vertical-type, cast-iron body with operating wrench, extension rod, and adjustable cast-iron barrel of length required for depth of burial of valve.

2.11 CHECK VALVES

A. AWWA Check Valves:
1. Description: Swing-check type with resilient seat. Include interior coating according to AWWA C550 and ends to match piping.

a. Standard: AWWA C508.
b. Pressure Rating: 175 psig (1207 kPa).

B. UL/FMG, Check Valves:
1. Description: Swing-check type with pressure rating; rubber-face checks, unless otherwise indicated; and ends matching piping.
a. Standards: UL 312 and FMG approved.
b. Pressure Rating: [175 psig (1207 kPa)] [250 psig (1725 kPa)].

2.12 DETECTOR CHECK VALVES

A. Detector Check Valves:
1. Description: Galvanized cast-iron body, bolted cover with air-bleed device for access to internal parts, and flanged ends. Include one-piece bronze disc with bronze bushings, pivot, and replaceable seat. Include threaded bypass taps in inlet and outlet for bypass meter connection. Set valve to allow minimal water flow through bypass meter when major water flow is required.
a. Standards: UL 312 and FMG approved.
b. Pressure Rating: 175 psig (1207 kPa).
c. Water Meter: AWWA C700, disc type, at least one-fourth size of detector check valve. Include meter, bypass piping, gate valves, check valve, and connections to detector check valve.
2. Description: Iron body, corrosion-resistant clapper ring and seat ring material, flanged ends, with connections for bypass and installation of water meter.
a. Standards: UL 312 and FMG approved.
b. Pressure Rating: 175 psig (1207 kPa).

2.13 BUTTERFLY VALVES

A. AWWA Butterfly Valves:
1. Description: Rubber seated.
a. Standard: AWWA C504.
b. Body: Cast or ductile iron.
c. Body Type: [Wafer] [Wafer or flanged] [Flanged].
d. Pressure Rating: 150 psig (1035 kPa).

B. UL Butterfly Valves:
1. Description: Metal on resilient material seating.
a. Standards: UL 1091 and FMG approved.
b. Body: Cast or ductile iron.
c. Body Type: [Wafer] [Wafer or flanged] [Flanged].
d. Pressure Rating: 175 psig (1207 kPa).

2.14 PLUG VALVES

A. Plug Valves:
1. Description: Resilient-seated eccentric.
a. Standard: MSS SP-108.
b. Body: Cast iron.
c. Pressure Rating: 175-psig (1207-kPa) minimum CWP.
d. Seat Material: Suitable for potable-water service.

2.15 [CORPORATION VALVES] [AND] [CURB VALVES]

A. Manufacturers:

B. Service-Saddle Assemblies: Comply with AWWA C800. Include saddle and valve compatible with tapping machine.
1. Service Saddle: Copper alloy with seal and AWWA C800, threaded outlet for corporation valve.

2. Corporation Valve: Bronze body and ground-key plug, with AWWA C800, threaded inlet and outlet matching service piping material.
3. Manifold: Copper fitting with two to four inlets as required, with ends matching corporation valves and outlet matching service piping material.

C. Curb Valves: Comply with AWWA C800. Include bronze body, ground-key plug or ball, and wide tee head, with inlet and outlet matching service piping material.

D. Service Boxes for Curb Valves: Similar to AWWA M44 requirements for cast-iron valve boxes. Include cast-iron telescoping top section of length required for depth of burial of valve, plug with lettering "WATER," and bottom section with base that fits over curb valve and with a barrel approximately 3 inches (75 mm) in diameter.
1. Shutoff Rods: Steel, tee-handle with one pointed end, stem of length to operate deepest buried valve, and slotted end matching curb valve.

2.16 WATER METERS

A. Water meters will be furnished by utility company.

B. Manufacturers:

C. Displacement-Type Water Meters:
1. Description: With bronze main case.
a. Standard: AWWA C700.
b. Registration: Flow in [gallons (liters)] [cubic feet (cubic meters)].

D. Turbine-Type Water Meters:
1. Description:
a. Standard: AWWA C701.
b. Registration: Flow in [gallons (liters)] [cubic feet (cubic meters)].

E. Compound-Type Water Meters:
1. Description:
a. Standard: AWWA C702.
b. Registration: Flow in [gallons (liters)] [cubic feet (cubic meters)].

F. Remote Registration System:
1. Description: Utility company standard; direct-reading type. Include meter modified with signal-transmitting assembly, low-voltage connecting wiring, and remote register assembly.
a. Standard: AWWA C706.
b. Registration: Flow in [gallons (liters)] [cubic feet (cubic meters)].

G. Remote Registration System:
1. Description: Utility company standard; encoder type. Include meter modified with signal-transmitting assembly, low-voltage connecting wiring, and remote register assembly.
a. Standard: AWWA C707.
b. Registration: Flow in [gallons (liters)] [cubic feet (cubic meters)].
c. Data-Acquisition Units: Comply with utility company requirements for type and quantity.
d. Visible Display Units: Comply with utility company requirements for type and quantity.

2.17 DETECTOR-TYPE WATER METERS

A. Detector-Type Water Meters:

B. Description: Main line, proportional meter with second meter on bypass. Register flow in [gallons (liters)] [cubic feet (cubic meters)].
1. Standards: AWWA C703, UL listed, and FMG approved.
2. Pressure Rating: 150 psig (1035 kPa).
3. Bypass Meter: [AWWA C701, turbine] [AWWA C702, compound]-type, bronze case.
a. Size: At least one-half nominal size of main-line meter.

C. Description: Main-line turbine meter with strainer and second meter on bypass. Register flow in [gallons (liters)] [cubic feet (cubic meters)].
1. Standards: AWWA C703, UL listed, and FMG approved.
2. Pressure Rating: 175 psig (1207 kPa).

3. Bypass Meter: AWWA C701, turbine-type, bronze case.
    a. Size: At least NPS 2 (DN 50).

D. Remote Registration System:
1. Description: Utility company standard; direct-reading type. Include meter modified with signal-transmitting assembly, low-voltage connecting wiring, and remote register assembly.
    a. Standard: AWWA C706.
    b. Registration: Flow in [gallons (liters)] [cubic feet (cubic meters)].

E. Remote Registration System:
1. Description: Utility company standard; encoder type. Include meter modified with signal-transmitting assembly, low-voltage connecting wiring, and remote register assembly.
    a. Standard: AWWA C707.
    b. Registration: Flow in [gallons (liters)] [cubic feet (cubic meters)].
    c. Data-Acquisition Units: Comply with utility company requirements for type and quantity.
    d. Visible Display Units: Comply with utility company requirements for type and quantity.

2.18 PRESSURE-REDUCING VALVES

A. Water Regulators:
1. Standard: ASSE 1003.
2. Pressure Rating: Initial pressure of 150 psig (1035 kPa).
3. Size: ???Insert NPS (DN)???.
4. Design Flow Rate: ???Insert gpm (L/s)???.
5. Design Inlet Pressure: ???Insert psig (kPa)???.
6. Design Outlet Pressure Setting: ???Insert psig (kPa)???.
7. Body: Bronze[with chrome-plated finish] for NPS 2 (DN 50) and smaller; cast iron[with interior lining complying with AWWA C550 or that is FDA approved] for NPS 2-1/2 and NPS 3 (DN 65 and DN 80).
8. Valves for Booster Heater Water Supply: Include integral bypass.
9. End Connections: Threaded for NPS 2 (DN 50) and smaller; flanged for NPS 2-1/2 and NPS 3 (DN 65 and DN 80).

B. Water Control Valves:
1. Description: Pilot-operation, diaphragm-type, single-seated main water control valve with AWWA C550 or FDA-approved, interior epoxy coating. Include small pilot control valve, restrictor device, specialty fittings, and sensor piping.
    a. Pressure Rating: Initial pressure of 150 psig (1035 kPa) minimum.
    b. Main Valve Body: Cast- or ductile-iron body with AWWA C550 or FDA-approved, interior epoxy coating; or stainless-steel body.
        1) Size: ???Insert NPS (DN)???.
        2) Pattern: [Angle] [Globe]-valve design.
        3) Trim: Stainless steel.
    c. Design Flow Rate: ???Insert gpm (L/s)???.
    d. Design Inlet Pressure: ???Insert psig (kPa)???.
    e. Design Outlet Pressure Setting: ???Insert psig (kPa)???.
    f. End Connections: Threaded for NPS 2 (DN 50) and smaller; [flanged] ???Insert type??? for NPS 2-1/2 (DN 65) and larger.

2.19 RELIEF VALVES

A. Air-Release Valves:
1. Description: Hydromechanical device to automatically release accumulated air.
    a. Standard: AWWA C512.
    b. Pressure Rating: [300 psig (2070 kPa)] ???Insert pressure???.
    c. Body Material: [Cast iron] ???Insert material???.
    d. Trim Material: Stainless steel[, brass, or bronze].
    e. Water Inlet Size: ???Insert NPS (DN)???.

f. Air Outlet Size: ???Insert NPS (DN)???.
g. Orifice Size: ???Insert inch (mm)???.
h. Design Air-Release Capacity: ???Insert cfm (L/s)??? at ???Insert psig (kPa)??? pipeline pressure.

B. Air/Vacuum Valves:
1. Description: Direct-acting, float-operated, hydromechanical device with large orifice to automatically release accumulated air or to admit air during filling of piping.
a. Standard: AWWA C512.
b. Pressure Rating: [300 psig (2070 kPa)] ???Insert pressure???.
c. Body Material: [Cast iron] ???Insert material???.
d. Trim Material: Stainless steel[, brass, or bronze].
e. Inlet and Outlet Size: ???Insert NPS (DN)???.
f. Orifice Size: ???Insert inch (mm)???.
g. Design Air Capacity: ???Insert cfm (L/s)??? at ???Insert psig (kPa)??? differential pressure.

C. Combination Air Valves:
1. Description: Float-operated, hydromechanical device to automatically release accumulated air or to admit air.
a. Standard: AWWA C512.
b. Pressure Rating: [300 psig (2070 kPa)] ???Insert pressure???.
c. Body Material: [Cast iron] ???Insert material???.
d. Trim Material: Stainless steel[, brass, or bronze].
e. Inlet and Outlet Size: ???Insert NPS (DN)???.
f. Orifice Size: ???Insert inch (mm)???.
g. Design Air Capacity: ???Insert cfm (L/s)??? at ???Insert psig (kPa)??? differential pressure.

2.20 VACUUM BREAKERS

A. Pressure Vacuum Breaker Assembly:
1. Standard: ASSE 1020.
2. Operation: Continuous-pressure applications.
3. Pressure Loss: [5 psig (35 kPa)] ???Insert pressure??? maximum, through middle 1/3 of flow range.
4. Size: ???Insert NPS (DN)???.
5. Design Flow Rate: ???Insert gpm (L/s)???.
6. Selected Unit Flow Range Limits: ???Insert gpm (L/s)???.
7. Pressure Loss at Design Flow Rate: ???Insert psig (kPa)???.
8. Accessories: Ball valves on inlet and outlet.

2.21 BACKFLOW PREVENTERS

A. Reduced-Pressure-Principle Backflow Preventers:
1. Standard: [ASSE 1013] [or] [AWWA C511].
2. Operation: Continuous-pressure applications.
3. Pressure Loss: [12 psig (83 kPa)] ???Insert pressure??? maximum, through middle 1/3 of flow range.
4. Size: ???Insert NPS (DN)???.
5. Design Flow Rate: ???Insert gpm (L/s)???.
6. Selected Unit Flow Range Limits: ???Insert gpm (L/s)???.
7. Pressure Loss at Design Flow Rate: ???Insert psig (kPa)??? for NPS 2 (DN 50) and smaller; ???Insert psig (kPa)??? for NPS 2-1/2 (DN 65) and larger.
8. Body: Bronze for NPS 2 (DN 50) and smaller; [cast iron with interior lining complying with AWWA C550 or that is FDA approved] [steel with interior lining complying with AWWA C550 or that is FDA approved] [stainless steel] for NPS 2-1/2 (DN 65) and larger.
9. End Connections: Threaded for NPS 2 (DN 50) and smaller; [flanged] ???Insert type??? for NPS 2-1/2 (DN 65) and larger.

10. Configuration: Designed for [horizontal, straight through] [vertical inlet, horizontal center section, and vertical outlet] [vertical] ???Insert configuration??? flow.
11. Accessories:
    a. Valves: Ball type with threaded ends on inlet and outlet of NPS 2 (DN 50) and smaller; OS&Y gate type with flanged ends on inlet and outlet of NPS 2-1/2 (DN 65) and larger.
    b. Air-Gap Fitting: ASME A112.1.2, matching backflow preventer connection.

B. Double-Check, Backflow-Prevention Assemblies:
1. Standard: [ASSE 1015] [or] [AWWA C510].
2. Operation: Continuous-pressure applications, unless otherwise indicated.
3. Pressure Loss: [5 psig (35 kPa)] ???Insert pressure??? maximum, through middle 1/3 of flow range.
4. Size: ???Insert NPS (DN)???.
5. Design Flow Rate: ???Insert gpm (L/s)???.
6. Selected Unit Flow Range Limits: ???Insert gpm (L/s)???.
7. Pressure Loss at Design Flow Rate: ???Insert psig (kPa)??? for NPS 2 (DN 50) and smaller; ???Insert psig (kPa)??? for NPS 2-1/2 (DN 65) and larger.
8. Body: Bronze for NPS 2 (DN 50) and smaller; [cast iron with interior lining complying with AWWA C550 or that is FDA approved] [steel with interior lining complying with AWWA C550 or that is FDA approved] [stainless steel] for NPS 2-1/2 (DN 65) and larger.
9. End Connections: Threaded for NPS 2 (DN 50) and smaller; [flanged] ???Insert type??? for NPS 2-1/2 (DN 65) and larger.
10. Configuration: Designed for [horizontal, straight through] ???Insert configuration??? flow.
11. Accessories: Ball valves with threaded ends on inlet and outlet of NPS 2 (DN 50) and smaller; OS&Y gate valves with flanged ends on inlet and outlet of NPS 2-1/2 (DN 65) and larger.

C. Reduced-Pressure-Detector, Fire-Protection Backflow Preventer Assemblies:
1. Standards: ASSE 1047 and UL listed or FMG approved.
2. Operation: Continuous-pressure applications.
3. Pressure Loss: [12 psig (83 kPa)] ???Insert pressure??? maximum, through middle 1/3 of flow range.
4. Size: ???Insert NPS (DN)???.
5. Design Flow Rate: ???Insert gpm (L/s)???.
6. Selected Unit Flow Range Limits: ???Insert gpm (L/s)???.
7. Pressure Loss at Design Flow Rate: ???Insert psig (kPa)???.
8. Body: [Cast iron with interior lining complying with AWWA C550 or that is FDA approved] [Steel with interior lining complying with AWWA C550 or that is FDA approved] [Stainless steel].
9. End Connections: Flanged.
10. Configuration: Designed for [horizontal, straight through] [vertical inlet, horizontal center section, and vertical outlet] [vertical] ???Insert configuration??? flow.
11. Accessories:
    a. Valves: UL 262, FMG-approved, OS&Y gate type with flanged ends on inlet and outlet.
    b. Air-Gap Fitting: ASME A112.1.2, matching backflow preventer connection.
    c. Bypass: With displacement-type water meter, shutoff valves, and reduced-pressure backflow preventer.

D. Double-Check, Detector-Assembly Backflow Preventers:
1. Standards: ASSE 1048 and UL listed or FMG approved.
2. Operation: Continuous-pressure applications.
3. Pressure Loss: [5 psig (35 kPa)] ???Insert pressure??? maximum, through middle 1/3 of flow range.
4. Size: ???Insert NPS (DN)???.
5. Design Flow Rate: ???Insert gpm (L/s)???.
6. Selected Unit Flow Range Limits: ???Insert gpm (L/s)???.
7. Pressure Loss at Design Flow Rate: ???Insert psig (kPa)???.
8. Body: [Cast iron with interior lining complying with AWWA C550 or that is FDA approved] [Steel with interior lining complying with AWWA C550 or that is FDA approved] [Stainless steel].

9. End Connections: Flanged.
10. Configuration: Designed for [horizontal, straight through] [vertical inlet, horizontal center section, and vertical outlet] [vertical] ???Insert configuration??? flow.
11. Accessories:
    a. Valves: UL 262, FMG-approved, OS&Y gate type with flanged ends on inlet and outlet.
    b. Bypass: With displacement-type water meter, shutoff valves, and reduced-pressure backflow preventer.

E. Backflow Preventer Test Kits:
1. Description: Factory calibrated, with gages, fittings, hoses, and carrying case with test-procedure instructions.

2.22 WATER METER BOXES

A. Description: Cast-iron body and cover for disc-type water meter, with lettering "WATER METER" in cover; and with slotted, open-bottom base section of length to fit over service piping.
1. Option: Base section may be cast-iron, PVC, clay, or other pipe.

B. Description: Cast-iron body and double cover for disc-type water meter, with lettering "WATER METER" in top cover; and with separate inner cover; air space between covers; and slotted, open-bottom base section of length to fit over service piping.

C. Description: Polymer-concrete body and cover for disc-type water meter, with lettering "WATER" in cover; and with slotted, open-bottom base section of length to fit over service piping. Include vertical and lateral design loadings of 15,000 lb minimum over 10 by 10 inches (6800 kg minimum over 254 by 254 mm) square.

2.23 CONCRETE VAULTS

A. Description: Precast, reinforced-concrete vault, designed for A-16 load designation according to ASTM C857 and made according to ASTM C858.
1. Ladder: ASTM A36/A36M, steel or polyethylene-encased steel steps.
2. Manhole: ASTM A48/A48M Class No. 35A minimum tensile strength, gray-iron traffic frame and cover.
    a. Dimension: 24-inch (610-mm) minimum diameter, unless otherwise indicated.
3. Manhole: ASTM A536, Grade 60-40-18, ductile-iron traffic frame and cover.
    a. Dimension: 24-inch- (610-mm-) minimum diameter, unless otherwise indicated.
4. Drain: ASME A112.6.3, cast-iron floor drain with outlet of size indicated. Include body anchor flange, light-duty cast-iron grate, bottom outlet, and integral or field-installed bronze ball or clapper-type backwater valve.

2.24 PROTECTIVE ENCLOSURES

A. Freeze-Protection Enclosures:
1. Description: Insulated enclosure designed to protect aboveground water piping, equipment, or specialties from freezing and damage, with heat source to maintain minimum internal temperature of 40 deg F (4 deg C) when external temperatures reach as low as minus 34 deg F (minus 36 deg C).
    a. Standard: ASSE 1060.
    b. Class I: For equipment or devices other than pressure or atmospheric vacuum breakers.
    c. Class I-V: For pressure or atmospheric vacuum breaker equipment or devices. Include drain opening in housing.
        1) Housing: Reinforced[-aluminum] [or] [-fiberglass] ???Insert housing??? construction.
            (a) Size: Of dimensions indicated, but not less than those required for access and service of protected unit.
            (b) Drain opening for units with drain connection.
            (c) Access doors with locking devices.
            (d) Insulation inside housing.
            (e) Anchoring devices for attaching housing to concrete base.
        2) Electric heating cable or heater with self-limiting temperature control.

B. Weather-Resistant Enclosures:

1. Description: Uninsulated enclosure designed to protect aboveground water piping, equipment, or specialties from weather and damage.
    a. Standard: ASSE 1060.
    b. Class III: For equipment or devices other than pressure or atmospheric vacuum breakers.
    c. Class III-V: For pressure or atmospheric vacuum breaker equipment or devices. Include drain opening in housing.
        1) Housing: Reinforced[-aluminum] [or] [-fiberglass] ???Insert housing??? construction.
            (a) Size: Of dimensions indicated, but not less than those required for access and service of protected unit.
            (b) Drain opening for units with drain connection.
            (c) Access doors with locking devices.
            (d) Anchoring devices for attaching housing to concrete base.

C. Expanded-Metal Enclosures:
1. Description: Enclosure designed to protect aboveground water piping, equipment, or specialties from damage.
    a. Material: ASTM F1267, expanded metal side and top panels, of weight and with reinforcement of same metal at edges as required for rigidity.
    b. Type: Type[I, expanded] [II, expanded and flattened].
    c. Class: Class[1, uncoated carbon steel] [2, hot-dip, zinc-coated carbon steel] [3, corrosion-resisting steel].
    d. Finish: Manufacturer's enamel paint.
    e. Size: Of dimensions indicated, but not less than those required for access and service of protected unit.
    f. Locking device.
    g. Lugs or devices for securing enclosure to base.

D. Enclosure Bases:
1. Description: [4-inch- (100-mm-)] [6-inch- (150-mm-)] minimum thickness precast concrete, of dimensions required to extend at least 6 inches (150 mm) beyond edges of enclosure housings. Include openings for piping.

2.25 FIRE HYDRANTS

A. Dry-Barrel Fire Hydrants:
1. Description: Freestanding, with one NPS 4-1/2 (DN 115) and two NPS 2-1/2 (DN 65) outlets, 5-1/4-inch (133-mm) main valve, drain valve, and NPS 6 (DN 150) mechanical-joint inlet. Include interior coating according to AWWA C550. Hydrant shall have cast-iron body, compression-type valve opening against pressure and closing with pressure.
    a. Standard: AWWA C502.
    b. Pressure Rating: [150 psig (1035 kPa) minimum] [250 psig (1725 kPa)].
2. Description: Freestanding, with one NPS 4-1/2 (DN 115) and two NPS 2-1/2 (DN 65) outlets, 5-1/4-inch (133-mm) main valve, drain valve, and NPS 6 (DN 150) mechanical-joint inlet. Hydrant shall have cast-iron body, compression-type valve opening against pressure and closing with pressure.
    a. Standards: UL 246, FMG approved.
    b. Pressure Rating: [150 psig (1035 kPa) minimum] [250 psig (1725 kPa)].
    c. Outlet Threads: NFPA 1963, with external hose thread used by local fire department. Include cast-iron caps with steel chains.
    d. Operating and Cap Nuts: Pentagon, 1-1/2 inches (38 mm) point to flat.
    e. Direction of Opening: Open hydrant valve by turning operating nut to left or counterclockwise.
    f. Exterior Finish: Red alkyd-gloss enamel paint, unless otherwise indicated.

B. Wet-Barrel Fire Hydrants:
1. Description: Freestanding, with one NPS 4-1/2 (DN 115) and two NPS 2-1/2 (DN 65) outlets, NPS 6 (DN 150) threaded or flanged inlet, and base section with NPS 6 (DN 150) mechanical-joint inlet. Include interior coating according to AWWA C550.
    a. Standard: AWWA C503.
    b. Pressure Rating: 150 psig (1035 kPa) minimum.

2. Description: Freestanding, with one NPS 4-1/2 (DN 115) and two NPS 2-1/2 (DN 65) outlets, NPS 6 (DN 150) threaded or flanged inlet, and base section with NPS 6 (DN 150) mechanical-joint inlet.
    a. Standards: UL 246 and FMG approved.
    b. Pressure Rating: 150 psig (1035 kPa) minimum.
    c. Outlet Threads: NFPA 1963, with external hose thread used by local fire department. Include cast-iron caps with steel chains.
    d. Operating and Cap Nuts: Pentagon, 1-1/2 inches (38 mm) point to flat.
    e. Direction of Opening: Open hydrant valves by turning operating nut to left or counterclockwise.
    f. Exterior Finish: Red alkyd-gloss enamel paint, unless otherwise indicated.

2.26 FLUSHING HYDRANTS

A. Post-Type Flushing Hydrants:
1. Description: Nonfreeze and drainable, of length required for shutoff valve installation below frost line.
    a. Pressure Rating: 150 psig (1035 kPa) minimum.
    b. Outlet: One, with horizontal discharge.
    c. Hose Thread: NPS 2-1/2 (DN 65), with NFPA 1963 external hose thread for use by local fire department, and with cast-iron cap with brass chain.
    d. Barrel: Cast-iron or steel pipe with breakaway feature.
    e. Valve: Bronze body with bronze-ball or plunger closure, and automatic draining.
    f. Security: Locking device for padlock.
    g. Exterior Finish: Red alkyd-gloss enamel paint, unless otherwise indicated.
    h. Inlet: NPS 2 (DN 50) minimum.
    i. Operating Wrench: One for each unit.

B. Ground-Type Flushing Hydrants:
1. Description: Nonfreeze and drainable, of length required for shutoff valve installation below frost line.
    a. Pressure Rating: 150 psig (1035 kPa) minimum.
    b. Outlet: One, with [vertical] [angle] discharge.
    c. Hose Thread: NPS 2-1/2 (DN 65), with NFPA 1963 external hose thread for use by local fire department, and with cast-iron cap with brass chain.
    d. Barrel: Cast-iron or steel pipe.
    e. Valve: Bronze body with bronze-ball or plunger closure, and automatic draining.
    f. Inlet: NPS 2 (DN 50) minimum.
    g. Hydrant Box: Cast iron with cover, for ground mounting.
    h. Operating Wrench: One for each unit.

C. Post-Type Sampling Station:
1. Description: Nonfreeze and drainable, of length required for shutoff valve installation below frost line.
    a. Pressure Rating: 100 psig (690 kPa) minimum.
    b. Sampling Outlet: One unthreaded nozzle with handle.
    c. Valve: Bronze body with bronze-ball or plunger closure. Include operating handle.
    d. Drain: Tubing with separate manual vacuum pump.
    e. Inlet: NPS 3/4 (DN 20) minimum.
    f. Housing: Weatherproof material with locking device. Include anchor device.
    g. Operating Wrench: One for each unit.

2.27 FIRE DEPARTMENT CONNECTIONS

A. Fire Department Connections:
1. Description: Freestanding, with cast-bronze body, thread inlets according to NFPA 1963 and matching local fire department hose threads, and threaded bottom outlet. Include lugged caps,

gaskets, and chains; lugged swivel connection and drop clapper for each hose-connection inlet; 18-inch- (460-mm-) high brass sleeve; and round escutcheon plate.

a. Standard: UL 405.
b. Connections: Two NPS 2-1/2 (DN 65) inlets and one [NPS 4 (DN 100)] [NPS 6 (DN 150)] outlet.
c. Connections: [Three] [Four] NPS 2-1/2 (DN 65) inlets and one NPS 6 (DN 150) outlet.
d. Connections: Six NPS 2-1/2 (DN 65) inlets and one [NPS 6 (DN 150)] [NPS 8 (DN 200)] outlet.
e. Inlet Alignment: [Inline, horizontal] [Square].
f. Finish Including Sleeve: [Polished chrome-plated] [Rough chrome-plated] [Polished bronze].
g. Escutcheon Plate Marking: "[AUTO SPKR] [&] [STANDPIPE]."

2.28 ALARM DEVICES

A. Alarm Devices, General: UL 753 and FMG approved, of types and sizes to mate and match piping and equipment.
B. Water-Flow Indicators: Vane-type water-flow detector, rated for 250-psig (1725-kPa) working pressure; designed for horizontal or vertical installation; with 2 single-pole, double-throw circuit switches to provide isolated alarm and auxiliary contacts, 7 A, 125-V ac and 0.25 A, 24-V dc; complete with factory-set, field-adjustable retard element to prevent false signals and tamperproof cover that sends signal when cover is removed.
C. Supervisory Switches: Single pole, double throw; designed to signal valve in other than fully open position.
D. Pressure Switches: Single pole, double throw; designed to signal increase in pressure.

PART 3 EXECUTION

3.1 EARTHWORK

A. Refer to Section 312000 "Earth Moving" for excavating, trenching, and backfilling.

3.2 PIPING APPLICATIONS

A. General: Use pipe, fittings, and joining methods for piping systems according to the following applications.
B. Transition couplings and special fittings with pressure ratings at least equal to piping pressure rating may be used, unless otherwise indicated.
C. Do not use flanges or unions for underground piping.
D. Flanges, unions, grooved-end-pipe couplings, and special fittings may be used, instead of joints indicated, on aboveground piping and piping in vaults.
E. Underground water-service piping [NPS 3/4 to NPS 3 (DN 20 to DN 80)] ???Insert pipe size range??? shall be[any of] the following:
   1. Soft copper tube, [ASTM B88, Type K (ASTM B88M, Type A)] [ASTM B88, Type L (ASTM B88M, Type B)]; [wrought-copper, solder-joint fittings; and brazed] [copper, pressure-seal fittings; and pressure-sealed] joints.
   2. PE, ASTM pipe; [insert fittings for PE pipe; and clamped] [molded PE fittings; and heat-fusion] joints.
   3. PVC, Schedule [40 pipe; PVC, Schedule 40] [80 pipe; PVC, Schedule 80] socket fittings; and solvent-cemented joints.
   4. NPS 1 to NPS 3 (DN 25 to DN 80) fiberglass, AWWA RTRP, Class [150] [200] [250]; RTRF; and bonded joints.
   5. Fiberglass, AWWA RTRP, Class [150] [200] [250]; RTRF; and bonded joints.
F. Underground water-service piping [NPS 4 to NPS 8 (DN 100 to DN 200)] ???Insert pipe size range??? shall be[any of] the following:
   1. Soft copper tube, [ASTM B88, Type K (ASTM B88M, Type A)] [ASTM B88, Type L (ASTM B88M, Type B)]; wrought-copper, solder-joint fittings; and brazed joints.

2. Ductile-iron, [push-on-joint pipe; ductile-iron, push-on-joint fittings; and gasketed] [mechanical-joint pipe; ductile-iron, mechanical-joint fittings; and mechanical] [grooved-end pipe; ductile-iron-pipe appurtenances; and grooved] joints.
3. PE, AWWA pipe; PE, AWWA fittings; and heat-fusion joints.
4. PVC, Schedule [40 pipe; PVC, Schedule 40] [80 pipe; PVC, Schedule 80] socket fittings; and solvent-cemented joints.
5. NPS 4 and NPS 6 (DN 100 and DN 150): NPS 6 (DN 150) PVC, AWWA Class 150 pipe; PVC, AWWA Class 150 [fabricated] [or] [molded] fittings; and gasketed joints.
6. NPS 8 (DN 200): PVC, AWWA Class 200 pipe; [PVC, AWWA Class 200 fabricated] [push-on-joint, ductile-iron] [mechanical-joint, ductile-iron] fittings; and gasketed joints.
7. Fiberglass, AWWA RTRP, Class [150] [200] [250]; RTRF; and bonded joints.

G. Water Meter Box Water-Service Piping [NPS 3/4 to NPS 2 (DN 20 to DN 50)] ???Insert pipe size range??? shall be same as underground water-service piping.

H. Aboveground[and Vault] Water-Service Piping [NPS 3/4 to NPS 3 (DN 20 to DN 80)] ???Insert pipe size range??? shall be[any of] the following:
1. Hard copper tube, [ASTM B88, Type K (ASTM B88M, Type A)] [ASTM B88, Type L (ASTM B88M, Type B)]; [wrought-copper, solder-joint fittings; and brazed] [copper, pressure-seal fittings; and pressure-sealed] joints.
2. PVC, Schedule 80 pipe; PVC, Schedule 80 [socket fittings; and solvent-cemented] [threaded fittings; and threaded] joints.
3. NPS 1 to NPS 2 (DN 25 to DN 50) fiberglass, AWWA RTRP, Class [150] [200] [250]; RTRF; and bonded joints.

I. Aboveground [and vault]water-service piping [NPS 4 to NPS 8 (DN 100 to DN 200)] ???Insert pipe size range??? shall be[any of] the following:
1. Hard copper tube, [ASTM B88, Type K (ASTM B88M, Type A)] [ASTM B88, Type L (ASTM B88M, Type B)]; wrought-copper, solder-joint fittings; and brazed joints.
2. Ductile-iron, grooved-end pipe; ductile-iron, grooved-end appurtenances; and grooved joints.
3. PVC, Schedule 80 pipe; PVC, Schedule 80 [socket fittings; and solvent-cemented] [threaded fittings; and threaded] joints.
4. Fiberglass, AWWA RTRP, Class [150] [200] [250]; RTRF; and bonded joints.

J. Underground Fire-Service-Main Piping [NPS 4 to NPS 12 (DN 100 to DN 300)] ???Insert pipe size range??? shall be[any of] the following:
1. Ductile-iron, [push-on-joint pipe; ductile-iron, push-on-joint fittings; and gasketed] [mechanical-joint pipe; ductile-iron, mechanical-joint fittings; and mechanical] [grooved-end pipe; ductile-iron-pipe appurtenances; and grooved] joints.
2. PE, Class [150] [200], fire-service pipe; molded PE fittings; and heat-fusion joints.
3. PVC, AWWA Class 150 pipe listed for fire-protection service; PVC Class 150 fabricated or molded fittings; and gasketed joints.
4. PVC, AWWA Class 200 pipe listed for fire-protection service; PVC Class 200 fabricated fittings; and gasketed joints.
5. Fiberglass, AWWA, FMG-approved RTRP, Class [150] [200]; RTRF; and gasketed joints.
6. Fiberglass, UL RTRP, Class [150] [200] [250]; RTRF; and gasketed joints.

K. Aboveground[and Vault] Fire-Service-Main Piping [NPS 4 to NPS 12 (DN 100 to DN 300)] ???Insert pipe size range??? shall be ductile-iron, grooved-end pipe; ductile-iron-pipe appurtenances; and grooved joints.

L. Underground Combined Water-Service and Fire-Service-Main Piping [NPS 6 to NPS 12 (DN 150 to DN 300)] ???Insert pipe size range??? shall be[any of] the following:
1. Ductile-iron, [push-on-joint pipe; ductile-iron, push-on-joint fittings; and gasketed] [mechanical-joint pipe; ductile-iron, mechanical-joint fittings; and mechanical] [grooved-end pipe; ductile-iron-pipe appurtenances; and grooved] joints.
2. PVC, AWWA Class [150] [200] pipe listed for fire-protection service; PVC fabricated or molded fittings of same class as pipe; and gasketed joints.
3. Fiberglass, AWWA, FMG-approved RTRP, Class [150] [200]; RTRF; and gasketed joints.

M. Aboveground[and Vault] Combined Water Service and Fire-Service-Main Piping [NPS 6 to NPS 12 (DN 150 to DN 300)] ???Insert pipe size range??? shall be ductile-iron, grooved-end pipe; ductile-iron-pipe appurtenances; and grooved joints.

3.3 VALVE APPLICATIONS

A. General Application: Use mechanical-joint-end valves for NPS 3 (DN 80) and larger underground installation. Use threaded- or flanged-end valves for installation in vaults. Use UL/FMG, nonrising-stem gate valves for installation with indicator posts. Use corporation valves and curb valves with ends compatible with piping, for NPS 2 (DN 50) and smaller installation.

B. Drawings indicate valve types to be used. Where specific valve types are not indicated, the following requirements apply:
   1. Underground Valves, NPS 3 (DN 80) and Larger: AWWA, cast-iron, nonrising-stem, [metal] [resilient] [high-pressure, resilient]-seated gate valves with valve box.
   2. Underground Valves, NPS 4 (DN 100) and Larger, for Indicator Posts: UL/FMG, cast-iron, nonrising-stem gate valves with indicator post.
   3. Use the following for valves in vaults and aboveground:
      a. Gate Valves, NPS 2 (DN 50) and Smaller: Bronze, [nonrising] [rising] stem.
      b. Gate Valves, NPS 3 (DN 80) and Larger: [AWWA, cast iron, OS&Y rising stem, metal seated] [AWWA, cast iron, OS&Y rising stem, resilient seated] [UL/FMG, cast iron, OS&Y rising stem].
      c. Check Valves: [AWWA C508] [UL/FMG], swing type.
   4. Pressure-Reducing Valves: Use for water-service piping in vaults and aboveground to control water pressure.
   5. Relief Valves: Use for water-service piping in vaults and aboveground.
      a. Air-Release Valves: To release accumulated air.
      b. Air/Vacuum Valves: To release or admit large volume of air during filling of piping.
      c. Combination Air Valves: To release or admit air.
   6. Detector Check Valves: Use for water-service piping in vaults and aboveground to detect unauthorized use of water.

3.4 PIPING SYSTEMS - COMMON REQUIREMENTS

A. See Section 330500 "Common Work Results for Utilities" for piping-system common requirements.

3.5 PIPING INSTALLATION

A. Water-Main Connection: Arrange with utility company for tap of size and in location indicated in water main.

B. Water-Main Connection: Tap water main according to requirements of water utility company and of size and in location indicated.

C. Make connections larger than NPS 2 (DN 50) with tapping machine according to the following:
   1. Install tapping sleeve and tapping valve according to MSS SP-60.
   2. Install tapping sleeve on pipe to be tapped. Position flanged outlet for gate valve.
   3. Use tapping machine compatible with valve and tapping sleeve; cut hole in main. Remove tapping machine and connect water-service piping.
   4. Install gate valve onto tapping sleeve. Comply with MSS SP-60. Install valve with stem pointing up and with valve box.

D. Make connections NPS 2 (DN 50) and smaller with drilling machine according to the following:
   1. Install service-saddle assemblies and corporation valves in size, quantity, and arrangement required by utility company standards.
   2. Install service-saddle assemblies on water-service pipe to be tapped. Position outlets for corporation valves.
   3. Use drilling machine compatible with service-saddle assemblies and corporation valves. Drill hole in main. Remove drilling machine and connect water-service piping.
   4. Install corporation valves into service-saddle assemblies.
   5. Install manifold for multiple taps in water main.
   6. Install curb valve in water-service piping with head pointing up and with service box.

E. Comply with NFPA 24 for fire-service-main piping materials and installation.
   1. Install PE corrosion-protection encasement according to ASTM A674 or AWWA C105.
   2. Install copper tube and fittings according to CDA's "Copper Tube Handbook."

F. Install ductile-iron, water-service piping according to AWWA C600 and AWWA M41.
   1. Install PE corrosion-protection encasement according to ASTM A674 or AWWA C105.
G. Install PE pipe according to ASTM D2774 and ASTM F645.
H. Install PVC, AWWA pipe according to ASTM F645 and AWWA M23.
I. Install fiberglass AWWA pipe according to AWWA M45.
J. Bury piping with depth of cover over top at least [30 inches (750 mm)] ???Insert dimension???, with top at least [12 inches (300 mm)] ???Insert dimension??? below level of maximum frost penetration, and according to the following:
   1. Under Driveways: With at least [36 inches (910 mm)] ???Insert dimension??? cover over top.
   2. Under Railroad Tracks: With at least [48 inches (1220 mm)] ???Insert dimension??? cover over top.
   3. In Loose Gravelly Soil and Rock: With at least [12 inches (300 mm)] ???Insert dimension??? additional cover.
K. Install piping by tunneling or jacking, or combination of both, under streets and other obstructions that cannot be disturbed.
L. Extend water-service piping and connect to water-supply source and building-water-piping systems at outside face of building wall in locations and pipe sizes indicated.
   1. Terminate water-service piping at building wall until building-water-piping systems are installed. Terminate piping with caps, plugs, or flanges as required for piping material. Make connections to building-water-piping systems when those systems are installed.
M. Sleeves are specified in Section 220517 "Sleeves and Sleeve Seals for Plumbing Piping."
N. Mechanical sleeve seals are specified in Section 220517 "Sleeves and Sleeve Seals for Plumbing Piping."
O. Install underground piping with restrained joints at horizontal and vertical changes in direction. Use restrained-joint piping, thrust blocks, anchors, tie-rods and clamps, and other supports.
P. See Section 211200 "Fire-Suppression Standpipes," Section 211313 "Wet-Pipe Sprinkler Systems," and Section 211316 "Dry-Pipe Sprinkler Systems" for fire-suppression-water piping inside the building.
Q. See Section 221116 "Domestic Water Piping" for potable-water piping inside the building.

3.6 INSTALLATION OF HANGERS AND SUPPORTS

A. Comply with requirements for seismic-restraint devices specified in Section 230548 "Vibration and Seismic Controls for HVAC."
B. Comply with requirements for hangers, supports, and anchor devices specified in Section 230529 "Hangers and Supports for HVAC Piping and Equipment."
C. Install the following pipe attachments:
   1. Adjustable steel clevis hangers for individual horizontal piping less than 20 feet (6 m) long.
   2. Adjustable roller hangers and spring hangers for individual horizontal piping 20 feet (6 m) or longer.
   3. Pipe Roller: MSS SP-58, Type 44 for multiple horizontal piping 20 feet (6 m) or longer, supported on a trapeze.
   4. Spring hangers to support vertical runs.
   5. Provide copper-clad hangers and supports for hangers and supports in direct contact with copper pipe.
   6. On [PVC] [and] [fiberglass] piping, install pads or cushions on bearing surfaces to prevent hanger from scratching pipe.
D. Install hangers for copper tubing with maximum spacing and minimum rod diameters to comply with MSS-58, locally enforced codes, and authorities having jurisdiction requirements, whichever are most stringent.
E. Install hangers for PVC piping with maximum horizontal spacing and minimum rod diameters to comply with manufacturer's written instructions, locally enforced codes, and authorities having jurisdiction requirements, whichever are most stringent.
F. Install hangers for fiberglass piping with maximum horizontal spacing and minimum rod diameters to comply with manufacturer's written instructions, locally enforced codes, and authorities having jurisdiction requirements, whichever are most stringent.
G. Support horizontal piping within [12 inches (300 mm)] ???Insert dimension??? of each fitting and coupling.
H. Support vertical runs of copper tubing to comply with MSS-58, locally enforced codes, and authorities having jurisdiction requirements, whichever are most stringent.

I. Support vertical runs of [PVC] [fiberglass] piping to comply with manufacturer's written instructions, locally enforced codes, and authorities having jurisdiction requirements, whichever are most stringent.

3.7 JOINT CONSTRUCTION

A. See Section 330500 "Common Work Results for Utilities" for basic piping joint construction.
B. Make pipe joints according to the following:
   1. Copper-Tubing, Pressure-Sealed Joints: Join copper tube and pressure-seal fittings with tools and procedures recommended by pressure-seal-fitting manufacturer. Leave insertion marks on pipe after assembly.
   2. Ductile-Iron Piping, Gasketed Joints for Water-Service Piping: AWWA C600 and AWWA M41.
   3. Ductile-Iron Piping, Gasketed Joints for Fire-Service-Main Piping: UL 194.
   4. Ductile-Iron Piping, Grooved Joints: Cut-groove pipe. Assemble joints with grooved-end, ductile-iron-piping couplings, gaskets, lubricant, and bolts according to coupling manufacturer's written instructions.
   5. PE Piping Insert-Fitting Joints: Use plastic insert fittings and fasteners according to fitting manufacturer's written instructions.
   6. PVC Piping Gasketed Joints: Use joining materials according to AWWA C900. Construct joints with elastomeric seals and lubricant according to ASTM D2774 or ASTM D3139 and pipe manufacturer's written instructions.
   7. Fiberglass Piping Bonded Joints: Use adhesive and procedure recommended by piping manufacturer.
   8. Install dielectric fittings in piping at connections of dissimilar metal piping and tubing.
      a. Dielectric Fittings for [NPS 2 (DN 50)] ???Insert pipe size??? and Smaller: Use dielectric [nipples] [unions].
      b. Dielectric Fittings for [NPS 2-1/2 to NPS 4 (DN 65 to DN 100)] ???Insert pipe size range???: Use dielectric [flanges] [flange kits] [nipples].
      c. Dielectric Fittings for [NPS 5 (DN 125)] ???Insert pipe size??? and Larger: Use dielectric flange kits.

3.8 ANCHORAGE INSTALLATION

A. Anchorage, General: Install water-distribution piping with restrained joints. Anchorages and restrained-joint types that may be used include the following:
   1. Concrete thrust blocks.
   2. Locking mechanical joints.
   3. Set-screw mechanical retainer glands.
   4. Bolted flanged joints.
   5. Heat-fused joints.
   6. Pipe clamps and tie rods.
   7. ???Insert devices???.
B. Install anchorages for tees, plugs and caps, bends, crosses, valves, and hydrant branches. Include anchorages for the following piping systems:
   1. Gasketed-Joint, Ductile-Iron, Water-Service Piping: According to AWWA C600.
   2. Gasketed-Joint, PVC Water-Service Piping: According to AWWA M23.
   3. Bonded-Joint Fiberglass, Water-Service Piping: According to AWWA M45.
   4. Fire-Service-Main Piping: According to NFPA 24.
C. Apply full coat of asphalt or other acceptable corrosion-resistant material to surfaces of installed ferrous anchorage devices.

3.9 VALVE INSTALLATION

A. AWWA Gate Valves: Comply with AWWA C600 and AWWA M44. Install each underground valve with stem pointing up and with valve box.
B. AWWA Valves Other Than Gate Valves: Comply with AWWA C600 and AWWA M44.
C. UL/FMG, Gate Valves: Comply with NFPA 24. Install each underground valve and valves in vaults with stem pointing up and with vertical cast-iron indicator post.

D. UL/FMG, Valves Other Than Gate Valves: Comply with NFPA 24.
E. MSS Valves: Install as component of connected piping system.
F. Corporation Valves and Curb Valves: Install each underground curb valve with head pointed up and with service box.
G. Pressure-Reducing Valves: Install in vault or aboveground between shutoff valves.[Install full-size valved bypass.]
H. Relief Valves: Comply with AWWA C512. Install aboveground with shutoff valve on inlet.

3.10 DETECTOR-CHECK VALVE INSTALLATION

A. Install in vault or aboveground.
B. Install for proper direction of flow. Install bypass with water meter, gate valves on each side of meter, and check valve downstream from meter.
C. Support detector check valves, meters, shutoff valves, and piping on brick or concrete piers.

3.11 WATER METER INSTALLATION

A. Install water meters, piping, and specialties according to utility company's written instructions.
B. Water Meters: Install [displacement] [turbine]-type water meters, NPS 2 (DN 50) and smaller, in meter boxes with shutoff valves on water meter inlets. Include valves on water meter outlets and valved bypass around meters unless prohibited by authorities having jurisdiction.
C. Water Meters: Install [compound] [turbine]-type water meters, NPS 3 (DN 80) and larger, in meter vaults. Include shutoff valves on water meter inlets and outlets and valved bypass around meters. Support meters, valves, and piping on brick or concrete piers.
D. Water Meters: Install detector-type water meters in meter vault according to AWWA M6. Include shutoff valves on water meter inlets and outlets and full-size valved bypass around meters. Support meters, valves, and piping on brick or concrete piers.

3.12 ROUGHING-IN FOR WATER METERS

A. Rough-in piping and specialties for water meter installation according to utility company's written instructions.

3.13 VACUUM BREAKER ASSEMBLY INSTALLATION

A. Install pressure vacuum breaker assemblies of type, size, and capacity indicated. Include valves and test cocks. Install according to requirements of plumbing and health department and authorities having jurisdiction.
B. Do not install pressure vacuum breaker assemblies in vault or other space subject to flooding.

3.14 BACKFLOW PREVENTER INSTALLATION

A. Install backflow preventers of type, size, and capacity indicated. Include valves and test cocks. Install according to requirements of plumbing and health department and authorities having jurisdiction.
B. Do not install backflow preventers that have relief drain in vault or in other spaces subject to flooding.
C. Do not install bypass piping around backflow preventers.
D. Support NPS 2-1/2 (DN 65) and larger backflow preventers, valves, and piping near floor and on brick or concrete piers.

3.15 WATER METER BOX INSTALLATION

A. Install water meter boxes in paved areas flush with surface.
B. Install water meter boxes in grass or earth areas with top [2 inches (50 mm)] ???Insert dimension??? above surface.

3.16 CONCRETE VAULT INSTALLATION

A. Install precast concrete vaults according to ASTM C891.

3.17 PROTECTIVE ENCLOSURE INSTALLATION

A. Install concrete base level and with top approximately [2 inches (50 mm)] ???Insert measurement??? above grade.
B. Install protective enclosure over valves and equipment.
C. Anchor protective enclosure to concrete base.

3.18 FIRE HYDRANT INSTALLATION

A. General: Install each fire hydrant with separate gate valve in supply pipe, anchor with restrained joints or thrust blocks, and support in upright position.
B. Wet-Barrel Fire Hydrants: Install with valve below frost line. Provide for drainage.
C. AWWA Fire Hydrants: Comply with AWWA M17.
D. UL/FMG Fire Hydrants: Comply with NFPA 24.

3.19 FLUSHING HYDRANT INSTALLATION

A. Install post-type flushing hydrants with valve below frost line and provide for drainage. Support in upright position. Include separate gate valve or curb valve and restrained joints in supply piping.
B. Install ground-type flushing hydrants with valve below frost line and provide for drainage. Install hydrant box flush with grade. Include separate gate valve or curb valve and restrained joints in supply piping.
C. Install sampling stations with valve below frost line and provide for drainage. Attach weather-resistant housing and support in upright position. Include separate curb valve in supply piping.

3.20 FIRE DEPARTMENT CONNECTION INSTALLATION

A. Install ball drip valves at each check valve for fire department connection to mains.
B. Install protective pipe bollards [on two sides of] [on three sides of] ???Describe arrangement??? each fire department connection. Pipe bollards are specified in Section 055000 "Metal Fabrications."

3.21 ALARM DEVICE INSTALLATION

A. General: Comply with NFPA 24 for devices and methods of valve supervision. Underground valves with valve box do not require supervision.
B. Supervisory Switches: Supervise valves in open position.
   1. Valves: Grind away portion of exposed valve stem. Bolt switch, with plunger in stem depression, to OS&Y gate-valve yoke.
   2. Indicator Posts: Drill and thread hole in upper-barrel section at target plate. Install switch, with toggle against target plate, on barrel of indicator post.
C. Locking and Sealing: Secure unsupervised valves as follows:
   1. Valves: Install chain and padlock on open OS&Y gate valve.
   2. Post Indicators: Install padlock on wrench on indicator post.
D. Pressure Switches: Drill and thread hole in exposed barrel of fire hydrant. Install switch.
E. Water-Flow Indicators: Install in water-service piping in vault. Select indicator with saddle and vane matching pipe size. Drill hole in pipe, insert vane, and bolt saddle to pipe.
F. Connect alarm devices to building fire alarm system. Wiring and fire-alarm devices are specified in Section 284621.11 "Addressable Fire-Alarm Systems" and Section 284621.13 "Conventional Fire-Alarm Systems."

3.22 CONNECTIONS

A. See Section 330500 "Common Work Results for Utilities" for piping connections to valves and equipment.
B. Connect water-distribution piping to [utility water main] [existing water main] ???Insert piping system???. Use [tapping sleeve and tapping valve] [service clamp and corporation valve] ???Insert method???.
C. Connect water-distribution piping to interior [domestic water] [and] [fire-suppression] piping.
D. Connect waste piping from concrete vault drains to [sanitary sewerage system. See Section 221313 "Facility Sanitary Sewers" for connection to sanitary-sewer] [storm-drainage system. See Section 334400 "Storm Utility Drainage Piping" for connection to storm-sewer] piping.

E. Ground equipment according to Section 260526 "Grounding and Bonding for Electrical Systems."
F. Connect wiring according to Section 260519 "Low-Voltage Electrical Power Conductors and Cables."

3.23 FIELD QUALITY CONTROL

A. Piping Tests: Conduct piping tests before joints are covered and after concrete thrust blocks have hardened sufficiently. Fill pipeline 24 hours before testing and apply test pressure to stabilize system. Use only potable water.
B. Hydrostatic Tests: Test at not less than one-and-one-half times working pressure for two hours.
   1. Increase pressure in 50-psig (350-kPa) increments and inspect each joint between increments. Hold at test pressure for 1 hour; decrease to 0 psig (0 kPa). Slowly increase again to test pressure and hold for 1 more hour. Maximum allowable leakage is 2 quarts (1.89 L) per hour per 100 joints. Remake leaking joints with new materials and repeat test until leakage is within allowed limits.
C. Prepare reports of testing activities.

3.24 IDENTIFICATION

A. Install continuous underground[detectable] warning tape during backfilling of trench for underground water-distribution piping. Locate below finished grade, directly over piping. Underground warning tapes are specified in Section 312000 "Earth Moving."
B. Permanently attach equipment nameplate or marker indicating plastic water-service piping, on main electrical meter panel. See Section 330500 "Common Work Results for Utilities" for identifying devices.

3.25 CLEANING

A. Clean and disinfect water-distribution piping as follows:
   1. Purge new water-distribution piping systems and parts of existing systems that have been altered, extended, or repaired before use.
   2. Use purging and disinfecting procedure prescribed by authorities having jurisdiction or, if method is not prescribed by authorities having jurisdiction, use procedure described in NFPA 24 for flushing of piping. Flush piping system with clean, potable water until dirty water does not appear at points of outlet.
   3. Use purging and disinfecting procedure prescribed by authorities having jurisdiction or, if method is not prescribed by authorities having jurisdiction, use procedure described in AWWA C651 or do as follows:
      a. Fill system or part of system with water/chlorine solution containing at least 50 ppm of chlorine; isolate and allow to stand for 24 hours.
      b. Drain system or part of system of previous solution and refill with water/chlorine solution containing at least 200 ppm of chlorine; isolate and allow to stand for 3 hours.
      c. After standing time, flush system with clean, potable water until no chlorine remains in water coming from system.
      d. Submit water samples in sterile bottles to authorities having jurisdiction. Repeat procedure if biological examination shows evidence of contamination.
B. Prepare reports of purging and disinfecting activities.

END OF SECTION 221113

SECTION 221116 - DOMESTIC WATER PIPING

PART 1 GENERAL

1.1 SUMMARY

A. Section Includes:
   1. Under-building-slab and aboveground domestic water pipes, tubes, and fittings inside buildings.
   2. Encasement for piping.
B. Related Requirements:
   1. Section 221113 "Facility Water Distribution Piping" for water-service piping outside the building from source to the point where water-service piping enters the building.

1.2 ACTION SUBMITTALS

A. Product Data: For transition fittings and dielectric fittings.

1.3 INFORMATIONAL SUBMITTALS

A. System purging and disinfecting activities report.
B. Field quality-control reports.

1.4 FIELD CONDITIONS

A. Interruption of Existing Water Service: Do not interrupt water service to facilities occupied by Owner or others unless permitted under the following conditions and then only after arranging to provide temporary water service according to requirements indicated:
   1. Notify Construction Manager no fewer than two days in advance of proposed interruption of water service.
   2. Do not interrupt water service without Construction Manager's written permission.

PART 2 PRODUCTS

2.1 PIPING MATERIALS

A. Comply with requirements in "Piping Schedule" Article for applications of pipe, tube, fitting materials, and joining methods for specific services, service locations, and pipe sizes.
B. Potable-water piping and components shall comply with NSF 14 and NSF 61 Annex G. Plastic piping components shall be marked with "NSF-pw."

2.2 COPPER TUBE AND FITTINGS

A. Hard Copper Tube: ASTM B 88, Type L water tube, drawn temper.
B. Soft Copper Tube: ASTM B 88, Type L water tube, annealed temper.
C. Cast-Copper, Solder-Joint Fittings: ASME B16.18, pressure fittings.
D. Wrought-Copper, Solder-Joint Fittings: ASME B16.22, wrought-copper pressure fittings.
E. Bronze Flanges: ASME B16.24, Class 150, with solder-joint ends.
F. Copper Unions:
   1. MSS SP-123.
   2. Cast-copper-alloy, hexagonal-stock body.
   3. Ball-and-socket, metal-to-metal seating surfaces.
   4. Solder-joint or threaded ends.

2.3 DUCTILE-IRON PIPE AND FITTINGS

A. Mechanical-Joint, Ductile-Iron Pipe:

1. AWWA C151/A21.51, with mechanical-joint bell and plain spigot end unless grooved or flanged ends are indicated.
2. Glands, Gaskets, and Bolts: AWWA C111/A21.11, ductile- or gray-iron glands, rubber gaskets, and steel bolts.

B. Standard-Pattern, Mechanical-Joint Fittings:
1. AWWA C110/A21.10, ductile or gray iron.
2. Glands, Gaskets, and Bolts: AWWA C111/A21.11, ductile- or gray-iron glands, rubber gaskets, and steel bolts.

2.4 ENCASEMENT FOR PIPING

A. Standard: ASTM A 674 or AWWA C105/A21.5.

2.5 TRANSITION FITTINGS

A. General Requirements:
1. Same size as pipes to be joined.
2. Pressure rating at least equal to pipes to be joined.
3. End connections compatible with pipes to be joined.

B. Fitting-Type Transition Couplings: Manufactured piping coupling or specified piping system fitting.

2.6 DIELECTRIC FITTINGS

A. General Requirements: Assembly of copper alloy and ferrous materials with separating nonconductive insulating material. Include end connections compatible with pipes to be joined.

B. Dielectric Unions:
1. Standard: ASSE 1079.
2. Pressure Rating: 125 psig minimum at 180 deg F.
3. End Connections: Solder-joint copper alloy and threaded ferrous.

C. Dielectric Flanges:
1. Standard: ASSE 1079.
2. Factory-fabricated, bolted, companion-flange assembly.
3. Pressure Rating: 125 psig minimum at 180 deg F.
4. End Connections: Solder-joint copper alloy and threaded ferrous; threaded solder-joint copper alloy and threaded ferrous.

D. Dielectric Nipples:
1. Standard: IAPMO PS 66.
2. Electroplated steel nipple complying with ASTM F 1545.
3. Pressure Rating and Temperature: .
4. End Connections: Male threaded or grooved.
5. Lining: Inert and noncorrosive, propylene.

PART 3 EXECUTION

3.1 EARTHWORK

A. Comply with requirements in Section 312000 "Earth Moving" for excavating, trenching, and backfilling.

3.2 PIPING INSTALLATION

A. Drawing plans, schematics, and diagrams indicate general location and arrangement of domestic water piping. Indicated locations and arrangements are used to size pipe and calculate friction loss, expansion, and other design considerations. Install piping as indicated unless deviations to layout are approved on coordination drawings.

B. Install copper tubing under building slab according to CDA's "Copper Tube Handbook."

C. Install ductile-iron piping under building slab with restrained joints according to AWWA C600 and AWWA M41.

D. Install underground copper tube in PE encasement according to ASTM A 674 or AWWA C105/A21.5.

E. Install shutoff valve, hose-end drain valve, strainer, pressure gage, and test tee with valve inside the building at each domestic water-service entrance. Comply with requirements for pressure gages in Section 220519 "Meters and Gages for Plumbing Piping" and with requirements for drain valves and strainers in Section 221119 "Domestic Water Piping Specialties."

F. Install shutoff valve immediately upstream of each dielectric fitting.

G. Install water-pressure-reducing valves downstream from shutoff valves. Comply with requirements for pressure-reducing valves in Section 221119 "Domestic Water Piping Specialties."

H. Install domestic water piping level without pitch and plumb.

I. Rough-in domestic water piping for water-meter installation according to utility company's requirements.

J. Install seismic restraints on piping. Comply with requirements for seismic-restraint devices in Section 220548 "Vibration and Seismic Controls for Plumbing Piping and Equipment."

K. Install piping concealed from view and protected from physical contact by building occupants unless otherwise indicated and except in equipment rooms and service areas.

L. Install piping indicated to be exposed and piping in equipment rooms and service areas at right angles or parallel to building walls. Diagonal runs are prohibited unless specifically indicated otherwise.

M. Install piping above accessible ceilings to allow sufficient space for ceiling panel removal, and coordinate with other services occupying that space.

N. Install piping to permit valve servicing.

O. Install nipples, unions, special fittings, and valves with pressure ratings the same as or higher than the system pressure rating used in applications below unless otherwise indicated.

P. Install piping free of sags and bends.

Q. Install fittings for changes in direction and branch connections.

R. Install unions in copper tubing at final connection to each piece of equipment, machine, and specialty.

S. Install pressure gages on suction and discharge piping for each plumbing pump and packaged booster pump. Comply with requirements for pressure gages in Section 220519 "Meters and Gages for Plumbing Piping."

T. Install thermostats in hot-water circulation piping. Comply with requirements for thermostats in Section 221123 "Domestic Water Pumps."

U. Install thermometers on outlet piping from each water heater. Comply with requirements for thermometers in Section 220519 "Meters and Gages for Plumbing Piping."

V. Install sleeves for piping penetrations of walls, ceilings, and floors. Comply with requirements for sleeves specified in Section 220517 "Sleeves and Sleeve Seals for Plumbing Piping."

W. Install sleeve seals for piping penetrations of concrete walls and slabs. Comply with requirements for sleeve seals specified in Section 220517 "Sleeves and Sleeve Seals for Plumbing Piping."

X. Install escutcheons for piping penetrations of walls, ceilings, and floors. Comply with requirements for escutcheons specified in Section 220518 "Escutcheons for Plumbing Piping."

3.3 JOINT CONSTRUCTION

A. Ream ends of pipes and tubes and remove burrs. Bevel plain ends of steel pipe.

B. Remove scale, slag, dirt, and debris from inside and outside of pipes, tubes, and fittings before assembly.

C. Threaded Joints: Thread pipe with tapered pipe threads according to ASME B1.20.1. Cut threads full and clean using sharp dies. Ream threaded pipe ends to remove burrs and restore full ID. Join pipe fittings and valves as follows:

   1. Apply appropriate tape or thread compound to external pipe threads.
   2. Damaged Threads: Do not use pipe or pipe fittings with threads that are corroded or damaged.

D. Brazed Joints for Copper Tubing: Comply with CDA's "Copper Tube Handbook," "Brazed Joints" chapter.

E. Soldered Joints for Copper Tubing: Apply ASTM B 813, water-flushable flux to end of tube. Join copper tube and fittings according to ASTM B 828 or CDA's "Copper Tube Handbook."

F. Flanged Joints: Select appropriate asbestos-free, nonmetallic gasket material in size, type, and thickness suitable for domestic water service. Join flanges with gasket and bolts according to ASME B31.9.

G. Joints for Dissimilar-Material Piping: Make joints using adapters compatible with materials of both piping systems.

3.4 TRANSITION FITTING INSTALLATION

A. Install transition couplings at joints of dissimilar piping.
B. Transition Fittings in Underground Domestic Water Piping:
   1. Fittings for NPS 1-1/2 and Smaller: Fitting-type coupling.
   2. Fittings for NPS 2 and Larger: Sleeve-type coupling.
C. Transition Fittings in Aboveground Domestic Water Piping NPS 2 and Smaller: Plastic-to-metal transition fittings or unions.

3.5 DIELECTRIC FITTING INSTALLATION

A. Install dielectric fittings in piping at connections of dissimilar metal piping and tubing.
B. Dielectric Fittings for NPS 2 and Smaller: Use dielectric couplings.
C. Dielectric Fittings for NPS 2-1/2 to NPS 4: Use dielectric flanges.

3.6 HANGER AND SUPPORT INSTALLATION

A. Comply with requirements for seismic-restraint devices in Section 220548 "Vibration and Seismic Controls for Plumbing Piping and Equipment."
B. Comply with requirements for pipe hanger, support products, and installation in Section 220529 "Hangers and Supports for Plumbing Piping and Equipment."
   1. Vertical Piping: MSS Type 8 or 42, clamps.
   2. Individual, Straight, Horizontal Piping Runs:
      a. 100 Feet and Less: MSS Type 1, adjustable, steel clevis hangers.
      b. Longer Than 100 Feet: MSS Type 43, adjustable roller hangers.
      c. Longer Than 100 Feet if Indicated: MSS Type 49, spring cushion rolls.
   3. Multiple, Straight, Horizontal Piping Runs 100 Feet or Longer: MSS Type 44, pipe rolls. Support pipe rolls on trapeze.
   4. Base of Vertical Piping: MSS Type 52, spring hangers.
C. Support vertical piping and tubing at base and at each floor.
D. Rod diameter may be reduced one size for double-rod hangers, to a minimum of 3/8 inch.
E. Install hangers for copper tubing with the following maximum horizontal spacing and minimum rod diameters:
   1. NPS 3/4 and Smaller: 60 inches with 3/8-inch rod.
   2. NPS 1 and NPS 1-1/4: 72 inches with 3/8-inch rod.
   3. NPS 1-1/2 and NPS 2: 96 inches with 3/8-inch rod.
   4. NPS 2-1/2: 108 inches with 1/2-inch rod.
   5. NPS 3 to NPS 5: 10 feet with 1/2-inch rod.
F. Install supports for vertical copper tubing every 10 feet.
G. Install hangers for steel piping with the following maximum horizontal spacing and minimum rod diameters:
   1. NPS 1-1/4 and Smaller: 84 inches with 3/8-inch rod.
   2. NPS 1-1/2: 108 inches with 3/8-inch rod.
   3. NPS 2: 10 feet with 3/8-inch rod.
   4. NPS 2-1/2: 11 feet with 1/2-inch rod.
H. Install supports for vertical steel piping every 15 feet.
I. Support piping and tubing not listed in this article according to MSS SP-69 and manufacturer's written instructions.

3.7 CONNECTIONS

A. Drawings indicate general arrangement of piping, fittings, and specialties.
B. When installing piping adjacent to equipment and machines, allow space for service and maintenance.
C. Connect domestic water piping to exterior water-service piping. Use transition fitting to join dissimilar piping materials.
D. Connect domestic water piping to water-service piping with shutoff valve; extend and connect to the following:

1. Domestic Water Booster Pumps: Cold-water suction and discharge piping.
2. Water Heaters: Cold-water inlet and hot-water outlet piping in sizes indicated, but not smaller than sizes of water heater connections.
3. Plumbing Fixtures: Cold- and hot-water-supply piping in sizes indicated, but not smaller than that required by plumbing code.
4. Equipment: Cold- and hot-water-supply piping as indicated, but not smaller than equipment connections. Provide shutoff valve and union for each connection. Use flanges instead of unions for NPS 2-1/2 and larger.

3.8 IDENTIFICATION

A. Identify system components. Comply with requirements for identification materials and installation in Section 220553 "Identification for Plumbing Piping and Equipment."

B. Label pressure piping with system operating pressure.

3.9 FIELD QUALITY CONTROL

A. Perform the following tests and inspections:
1. Piping Inspections:
   a. Do not enclose, cover, or put piping into operation until it has been inspected and approved by authorities having jurisdiction.
   b. During installation, notify authorities having jurisdiction at least one day before inspection must be made. Perform tests specified below in presence of authorities having jurisdiction:
      1) Roughing-in Inspection: Arrange for inspection of piping before concealing or closing in after roughing in and before setting fixtures.
      2) Final Inspection: Arrange for authorities having jurisdiction to observe tests specified in "Piping Tests" Subparagraph below and to ensure compliance with requirements.
   c. Reinspection: If authorities having jurisdiction find that piping will not pass tests or inspections, make required corrections and arrange for reinspection.
   d. Reports: Prepare inspection reports and have them signed by authorities having jurisdiction.
2. Piping Tests:
   a. Fill domestic water piping. Check components to determine that they are not air bound and that piping is full of water.
   b. Test for leaks and defects in new piping and parts of existing piping that have been altered, extended, or repaired. If testing is performed in segments, submit a separate report for each test, complete with diagram of portion of piping tested.
   c. Leave new, altered, extended, or replaced domestic water piping uncovered and unconcealed until it has been tested and approved. Expose work that was covered or concealed before it was tested.
   d. Cap and subject piping to static water pressure of 50 psig above operating pressure, without exceeding pressure rating of piping system materials. Isolate test source and allow it to stand for four hours. Leaks and loss in test pressure constitute defects that must be repaired.
   e. Repair leaks and defects with new materials, and retest piping or portion thereof until satisfactory results are obtained.
   f. Prepare reports for tests and for corrective action required.

B. Domestic water piping will be considered defective if it does not pass tests and inspections.

C. Prepare test and inspection reports.

3.10 ADJUSTING

A. Perform the following adjustments before operation:
1. Close drain valves, hydrants, and hose bibbs.
2. Open shutoff valves to fully open position.
3. Open throttling valves to proper setting.
4. Adjust balancing valves in hot-water-circulation return piping to provide adequate flow.
   a. Manually adjust ball-type balancing valves in hot-water-circulation return piping to provide hot-water flow in each branch.

b. Adjust calibrated balancing valves to flows indicated.

5. Remove plugs used during testing of piping and for temporary sealing of piping during installation.
6. Remove and clean strainer screens. Close drain valves and replace drain plugs.
7. Remove filter cartridges from housings and verify that cartridges are as specified for application where used and are clean and ready for use.
8. Check plumbing specialties and verify proper settings, adjustments, and operation.

3.11 CLEANING

A. Clean and disinfect potable domestic water piping as follows:
   1. Purge new piping and parts of existing piping that have been altered, extended, or repaired before using.
   2. Use purging and disinfecting procedures prescribed by authorities having jurisdiction; if methods are not prescribed, use procedures described in either AWWA C651 or AWWA C652 or follow procedures described below:
      a. Flush piping system with clean, potable water until dirty water does not appear at outlets.
      b. Fill and isolate system according to either of the following:
         1) Fill system or part thereof with water/chlorine solution with at least 50 ppm of chlorine. Isolate with valves and allow to stand for 24 hours.
         2) Fill system or part thereof with water/chlorine solution with at least 200 ppm of chlorine. Isolate and allow to stand for three hours.
      c. Flush system with clean, potable water until no chlorine is in water coming from system after the standing time.
      d. Repeat procedures if biological examination shows contamination.
      e. Submit water samples in sterile bottles to authorities having jurisdiction.
B. Clean non-potable domestic water piping as follows:
   1. Purge new piping and parts of existing piping that have been altered, extended, or repaired before using.
   2. Use purging procedures prescribed by authorities having jurisdiction or; if methods are not prescribed, follow procedures described below:
      a. Flush piping system with clean, potable water until dirty water does not appear at outlets.
      b. Submit water samples in sterile bottles to authorities having jurisdiction. Repeat procedures if biological examination shows contamination.
C. Prepare and submit reports of purging and disinfecting activities. Include copies of water-sample approvals from authorities having jurisdiction.
D. Clean interior of domestic water piping system. Remove dirt and debris as work progresses.

3.12 PIPING SCHEDULE

A. Transition and special fittings with pressure ratings at least equal to piping rating may be used in applications below unless otherwise indicated.
B. Flanges and unions may be used for aboveground piping joints unless otherwise indicated.
C. Fitting Option: Extruded-tee connections and brazed joints may be used on aboveground copper tubing.
D. Under-building-slab, domestic water piping, NPS 2 and smaller, shall be the following:
   1. Hard or soft copper tube, ASTM B 88, Type L; wrought-copper, solder-joint fittings; and brazed joints.
E. Aboveground domestic water piping, NPS 2 and smaller, shall be the following:
   1. Hard copper tube, ASTM B 88, Type L; wrought-copper, solder-joint fittings; and soldered joints.
F. Aboveground domestic water piping, NPS 2-1/2 to NPS 4, shall be the following:
   1. Hard copper tube, ASTM B 88, Type L; wrought-copper, solder-joint fittings; and brazed joints.

3.13 VALVE SCHEDULE

A. Drawings indicate valve types to be used. Where specific valve types are not indicated, the following requirements apply:
   1. Shutoff Duty: Use ball or gate valves for piping NPS 2 and smaller. Use butterfly, ball, or gate valves with flanged ends for piping NPS 2-1/2 and larger.

2. Throttling Duty: Use ball or globe valves for piping NPS 2 and smaller. Use butterfly or ball valves with flanged ends for piping NPS 2-1/2 and larger.
3. Hot-Water Circulation Piping, Balancing Duty: Memory-stop balancing valves.
4. Drain Duty: Hose-end drain valves.

B. Use check valves to maintain correct direction of domestic water flow to and from equipment.

END OF SECTION

SECTION 221119 - DOMESTIC WATER PIPING SPECIALTIES

PART 1 GENERAL

1.1 SUMMARY

A. Section Includes:
1. Vacuum breakers.
2. Backflow preventers.
3. Water pressure-reducing valves.
4. Balancing valves.
5. Temperature-actuated, water mixing valves.
6. Strainers.
7. Hose bibbs.
8. Wall hydrants.
9. Drain valves.
10. Water-hammer arresters.
11. Air vents.
12. Trap-seal primer valves.
13. Water meters.

B. Related Requirements:
1. Section 220519 "Meters and Gages for Plumbing Piping" for thermometers, pressure gages, and flow meters in domestic water piping.
2. Section 221116 "Domestic Water Piping" for water meters.
3. Section 224716 "Pressure Water Coolers" for water filters for water coolers.

1.2 ACTION SUBMITTALS

A. Product Data: For each type of product.

B. Shop Drawings: For domestic water piping specialties.
1. Include diagrams for power, signal, and control wiring.

1.3 INFORMATIONAL SUBMITTALS

A. Field quality-control reports.

1.4 CLOSEOUT SUBMITTALS

A. Operation and Maintenance Data: For domestic water piping specialties to include in emergency, operation, and maintenance manuals.

PART 2 PRODUCTS

2.1 GENERAL REQUIREMENTS FOR PIPING SPECIALTIES

A. Potable-water piping and components shall comply with NSF 61 Annex G.

2.2 PERFORMANCE REQUIREMENTS

A. Minimum Working Pressure for Domestic Water Piping Specialties: 125 psig unless otherwise indicated.

2.3 VACUUM BREAKERS

A. Pipe-Applied, Atmospheric-Type Vacuum Breakers:
1. Standard: ASSE 1001.

2. Size: NPS 1/4 to NPS 3, as required to match connected piping.
3. Body: Bronze.
4. Inlet and Outlet Connections: Threaded.
5. Finish: Chrome plated.

B. Hose-Connection Vacuum Breakers:
1. Standard: ASSE 1011.
2. Body: Bronze, nonremovable, with manual drain.
3. Outlet Connection: Garden-hose threaded complying with ASME B1.20.7.
4. Finish: Chrome or nickel plated.

2.4 BACKFLOW PREVENTERS

A. Reduced-Pressure-Principle Backflow Preventers:
1. Standard: ASSE 1013.
2. Operation: Continuous-pressure applications.
3. Pressure Loss: 12 psig maximum, through middle third of flow range.
4. Size: .
5. Design Flow Rate: .
6. Selected Unit Flow Range Limits: .
7. Pressure Loss at Design Flow Rate: for sizes NPS 2 and smaller; for NPS 2-1/2 and larger.
8. Body: Bronze for NPS 2 and smaller; for NPS 2-1/2 and larger.
9. End Connections: Threaded for NPS 2 and smaller; for NPS 2-1/2 and larger.
10. Configuration: Designed for flow.
11. Accessories:
    a. Valves NPS 2 and Smaller: Ball type with threaded ends on inlet and outlet.
    b. Valves NPS 2-1/2 and Larger: Outside-screw and yoke-gate type with flanged ends on inlet and outlet.
    c. Air-Gap Fitting: ASME A112.1.2, matching backflow-preventer connection.

B. Carbonated-Beverage-Dispenser, Dual-Check-Valve Backflow Preventers:
1. Standard: ASSE 1032.
2. Operation: Continuous-pressure applications.
3. Size: NPS 1/4 or NPS 3/8.
4. Body: Stainless steel.
5. End Connections: Threaded.

C. Hose-Connection Backflow Preventers:
1. Standard: ASSE 1052.
2. Operation: Up to 10-foot head of water back pressure.
3. Inlet Size: NPS 1/2 or NPS 3/4.
4. Outlet Size: Garden-hose thread complying with ASME B1.20.7.
5. Capacity: At least 3-gpm flow.

2.5 WATER PRESSURE-REDUCING VALVES

A. Water Regulators:
1. Standard: ASSE 1003.
2. Pressure Rating: Initial working pressure of 150 psig.
3. Size: .
4. Design Flow Rate: .
5. Design Inlet Pressure: .
6. Design Outlet Pressure Setting: .
7. Body: Bronze for NPS 2 and smaller; cast iron for NPS 2-1/2 and NPS 3.
8. Valves for Booster Heater Water Supply: Include integral bypass.
9. End Connections: Threaded for NPS 2 and smaller; flanged for NPS 2-1/2 and NPS 3.

2.6 BALANCING VALVES

A. Memory-Stop Balancing Valves:
1. Standard: MSS SP-110 for two-piece, copper-alloy ball valves.
2. Pressure Rating: 400-psig minimum CWP.
3. Size: NPS 2 or smaller.
4. Body: Copper alloy.
5. Port: Standard or full port.
6. Ball: Chrome-plated brass.
7. Seats and Seals: Replaceable.
8. End Connections: Solder joint or threaded.
9. Handle: Vinyl-covered steel with memory-setting device.

2.7 TEMPERATURE-ACTUATED, WATER MIXING VALVES

A. Individual-Fixture, Water Tempering Valves:
1. Standard: ASSE 1016, thermostatically controlled, water tempering valve.
2. Pressure Rating: 125 psig minimum unless otherwise indicated.
3. Body: Bronze body with corrosion-resistant interior components.
4. Temperature Control: Adjustable.
5. Inlets and Outlet: Threaded.
6. Finish: Rough or chrome-plated bronze.
7. Tempered-Water Setting: .
8. Tempered-Water Design Flow Rate: .

2.8 STRAINERS FOR DOMESTIC WATER PIPING

A. Y-Pattern Strainers:
1. Pressure Rating: 125 psig minimum unless otherwise indicated.
2. Body: Bronze for NPS 2 and smaller; cast iron for NPS 2-1/2 and larger.
3. End Connections: Threaded for NPS 2 and smaller; flanged for NPS 2-1/2 and larger.
4. Screen: Stainless steel with round perforations unless otherwise indicated.
5. Perforation Size:
   a. Strainers NPS 2 and Smaller: 0.020 inch.
6. Drain: Pipe plug.

2.9 OUTLET BOXES

A. Icemaker Outlet Boxes:
1. Mounting: Recessed.
2. Material and Finish: box and faceplate.
3. Faucet: Valved fitting complying with ASME A112.18.1. Include NPS 1/2 or smaller copper tube outlet.
4. Supply Shutoff Fitting: NPS 1/2 gate, globe, or ball valve and NPS 1/2 copper, water tubing.

2.10 HOSE BIBBS

A. Hose Bibbs:
1. Standard: ASME A112.18.1 for sediment faucets.
2. Body Material: Bronze.
3. Seat: Bronze, replaceable.
4. Supply Connections: NPS 1/2 or NPS 3/4 threaded or solder-joint inlet.
5. Outlet Connection: Garden-hose thread complying with ASME B1.20.7.
6. Pressure Rating: 125 psig.
7. Vacuum Breaker: Integral nonremovable, drainable, hose-connection vacuum breaker complying with ASSE 1011.

8. Finish for Equipment Rooms: Rough bronze, or chrome or nickel plated.
9. Finish for Service Areas: Rough bronze.
10. Finish for Finished Rooms: Chrome or nickel plated.
11. Operation for Equipment Rooms: Wheel handle or operating key.
12. Operation for Service Areas: Wheel handle.
13. Operation for Finished Rooms: Operating key.
14. Include operating key with each operating-key hose bibb.
15. Include integral wall flange with each chrome- or nickel-plated hose bibb.

2.11 WALL HYDRANTS

A. Moderate-Climate Wall Hydrants, HB-1:
1. Standard: ASME A112.21.3M for concealed-outlet, self-draining wall hydrants.
2. Pressure Rating: 125 psig.
3. Operation: Loose key.
4. Inlet: NPS 3/4 or NPS 1.
5. Outlet:
a. Concealed, with integral vacuum breaker or nonremovable hose-connection vacuum breaker complying with ASSE 1011 or backflow preventer complying with ASSE 1052.
b. Garden-hose thread complying with ASME B1.20.7.
6. Box: Deep, flush mounted with cover.
7. Box and Cover Finish: Polished nickel bronze.
8. Outlet:
a. Concealed, with integral vacuum breaker or nonremovable hose-connection vacuum breaker complying with ASSE 1011 or backflow preventer complying with ASSE 1052.
b. Garden-hose thread complying with ASME B1.20.7.
9. Nozzle and Wall-Plate Finish: Polished nickel bronze.
10. Operating Keys(s): One with each wall hydrant.

2.12 DRAIN VALVES

A. Ball-Valve-Type, Hose-End Drain Valves:
1. Standard: MSS SP-110 for standard-port, two-piece ball valves.
2. Pressure Rating: 400-psig minimum CWP.
3. Size: NPS 3/4.
4. Body: Copper alloy.
5. Ball: Chrome-plated brass.
6. Seats and Seals: Replaceable.
7. Handle: Vinyl-covered steel.
8. Inlet: Threaded or solder joint.
9. Outlet: Threaded, short nipple with garden-hose thread complying with ASME B1.20.7 and cap with brass chain.

B. Stop-and-Waste Drain Valves:
1. Standard: MSS SP-110 for ball valves or MSS SP-80 for gate valves.
2. Pressure Rating: 200-psig minimum CWP or Class 125.
3. Size: NPS 3/4.
4. Body: Copper alloy or ASTM B 62 bronze.
5. Drain: NPS 1/8 side outlet with cap.

2.13 WATER-HAMMER ARRESTERS

A. Water-Hammer Arresters, WHA-1:
1. Standard: ASSE 1010 or PDI-WH 201.
2. Type: Copper tube with piston.
3. Size: ASSE 1010, Sizes AA and A through F, or PDI-WH 201, Sizes A through F.

2.14 AIR VENTS

A. Bolted-Construction Automatic Air Vents:
   1. Body: Bronze.
   2. Pressure Rating and Temperature: 125-psig minimum pressure rating at 140 deg F.
   3. Float: Replaceable, corrosion-resistant metal.
   4. Mechanism and Seat: Stainless steel.
   5. Size: minimum inlet.
   6. Inlet and Vent Outlet End Connections: Threaded.

2.15 TRAP-SEAL PRIMER DEVICE

A. Supply-Type, Trap-Seal Primer Device, TP-1:
   1. Standard: ASSE 1018.
   2. Pressure Rating: 125 psig minimum.
   3. Body: Bronze.
   4. Inlet and Outlet Connections: NPS 1/2 threaded, union, or solder joint.
   5. Gravity Drain Outlet Connection: NPS 1/2 threaded or solder joint.
   6. Finish: Chrome plated, or rough bronze for units used with pipe or tube that is not chrome finished.

2.16 WATER METERS

A. Displacement-Type Water Meters:
   1. Description:
      a. Standard: AWWA C700.
      b. Pressure Rating: 150-psig working pressure.
      c. Body Design: Nutating disc; totalization meter.
      d. Registration: In gallons or cubic feet as required by utility company.
      e. Case: Bronze.
      f. End Connections: Threaded.
B. Turbine-Type Water Meters:
   1. Description:
      a. Standard: AWWA C701.
      b. Pressure Rating: working pressure.
      c. Body Design: Turbine; totalization meter.
      d. Registration: In gallons or cubic feet as required by utility company.
      e. Case: Bronze.
      f. End Connections for Meters NPS 2 and Smaller: Threaded.
      g. End Connections for Meters NPS 2-1/2 and Larger: Flanged.
C. Remote Registration System: Direct-reading type complying with AWWA C706; modified with signal-transmitting assembly, low-voltage connecting wiring, and remote register assembly as required by utility company.

PART 3 EXECUTION

3.1 INSTALLATION

A. Install backflow preventers in each water supply to mechanical equipment and systems and to other equipment and water systems that may be sources of contamination. Comply with authorities having jurisdiction.
   1. Locate backflow preventers in same room as connected equipment or system.
   2. Install drain for backflow preventers with atmospheric-vent drain connection with air-gap fitting, fixed air-gap fitting, or equivalent positive pipe separation of at least two pipe diameters in drain

piping and pipe-to-floor drain. Locate air-gap device attached to or under backflow preventer. Simple air breaks are unacceptable for this application.

3. Do not install bypass piping around backflow preventers.

B. Install water regulators with inlet and outlet shutoff valves. Install pressure gages on inlet and outlet.

C. Install balancing valves in locations where they can easily be adjusted.

D. Install temperature-actuated, water mixing valves with check stops or shutoff valves on inlets and with shutoff valve on outlet.

E. Install Y-pattern strainers for water on supply side of each control valve and pump.

F. Install outlet boxes recessed in wall or surface mounted on wall. Install 2-by-4-inch fire-retardant-treated-wood blocking, wall reinforcement between studs. Comply with requirements for fire-retardant-treated-wood blocking in Section 061000 "Rough Carpentry."

G. Install water-hammer arresters in water piping according to PDI-WH 201.

H. Install air vents at high points of water piping.

I. Install supply-type, trap-seal primer valves with outlet piping pitched down toward drain trap a minimum of 1 percent, and connect to floor-drain body, trap, or inlet fitting. Adjust valve for proper flow.

J. Install drainage-type, trap-seal primer valves as lavatory trap with outlet piping pitched down toward drain trap a minimum of 1 percent, and connect to floor-drain body, trap, or inlet fitting.

K. Install trap-seal primer systems with outlet piping pitched down toward drain trap a minimum of 1 percent, and connect to floor-drain body, trap, or inlet fitting. Adjust system for proper flow.

3.2 CONNECTIONS

A. Comply with requirements for ground equipment in Section 260526 "Grounding and Bonding for Electrical Systems."

B. Fire-retardant-treated-wood blocking is specified in Section 260519 "Low-Voltage Electrical Power Conductors and Cables" for electrical connections.

3.3 LABELING AND IDENTIFYING

A. Equipment Nameplates and Signs: Install engraved plastic-laminate equipment nameplate or sign on or near each of the following:

1. Intermediate atmospheric-vent backflow preventers.
2. Reduced-pressure-principle backflow preventers.
3. Carbonated-beverage-machine backflow preventers.
4. Water pressure-reducing valves.
5. Outlet boxes.
6. Supply-type, trap-seal primer valves.

B. Distinguish among multiple units, inform operator of operational requirements, indicate safety and emergency precautions, and warn of hazards and improper operations, in addition to identifying unit. Nameplates and signs are specified in Section 220553 "Identification for Plumbing Piping and Equipment."

3.4 FIELD QUALITY CONTROL

A. Perform the following tests and inspections:

1. Test each reduced-pressure-principle backflow preventer according to authorities having jurisdiction and the device's reference standard.

B. Domestic water piping specialties will be considered defective if they do not pass tests and inspections.

C. Prepare test and inspection reports.

3.5 ADJUSTING

A. Set field-adjustable pressure set points of water pressure-reducing valves.

B. Set field-adjustable flow set points of balancing valves.

C. Set field-adjustable temperature set points of temperature-actuated, water mixing valves.

END OF SECTION

SECTION 221316 - SANITARY WASTE AND VENT PIPING

PART 1 GENERAL

1.1 SUMMARY

A. Section Includes:
1. Pipe, tube, and fittings.
2. Specialty pipe fittings.
3. Encasement for underground metal piping.

1.2 PERFORMANCE REQUIREMENTS

A. Components and installation shall be capable of withstanding the following minimum working pressure unless otherwise indicated:
1. Soil, Waste, and Vent Piping: 10-foot head of water.
B. Seismic Performance: Soil, waste, and vent piping and support and installation shall withstand the effects of earthquake motions determined according to ASCE/SEI 7.

1.3 ACTION SUBMITTALS

A. Product Data: For each type of product indicated.

1.4 QUALITY ASSURANCE

A. Piping materials shall bear label, stamp, or other markings of specified testing agency.
B. Comply with NSF/ANSI 14, "Plastics Piping Systems Components and Related Materials," for plastic piping components. Include marking with "NSF-dwv" for plastic drain, waste, and vent piping and "NSF-sewer" for plastic sewer piping.

1.5 PROJECT CONDITIONS

A. Interruption of Existing Sanitary Waste Service: Do not interrupt service to facilities occupied by Owner or others unless permitted under the following conditions and then only after arranging to provide temporary service according to requirements indicated:
1. Notify Construction Manager no fewer than two days in advance of proposed interruption of sanitary waste service.
2. Do not proceed with interruption of sanitary waste service without Construction Manager's written permission.

PART 2 PRODUCTS

2.1 PIPING MATERIALS

A. Comply with requirements in "Piping Schedule" Article for applications of pipe, tube, fitting materials, and joining methods for specific services, service locations, and pipe sizes.

2.2 HUB-AND-SPIGOT, CAST-IRON SOIL PIPE AND FITTINGS

A. Pipe and Fittings: ASTM A 74, Service class(es).
B. Gaskets: ASTM C 564, rubber.
C. Calking Materials: ASTM B 29, pure lead and oakum or hemp fiber.

2.3 HUBLESS, CAST-IRON SOIL PIPE AND FITTINGS

A. Pipe and Fittings: ASTM A 888 or CISPI 301.
B. CISPI, Hubless-Piping Couplings:

1. Manufacturers: Subject to compliance with requirements, provide products by one of the following:
   a. Charlotte Pipe and Foundry Company.
   b. Tyler Pipe; a subsidiary of McWane Inc.
2. Standards: ASTM C 1277 and CISPI 310.
3. Description: Stainless-steel corrugated shield with stainless-steel bands and tightening devices; and ASTM C 564, rubber sleeve with integral, center pipe stop.

2.4 COPPER TUBE AND FITTINGS

A. Copper DWV Tube: ASTM B 306, drainage tube, drawn temper.
B. Copper Drainage Fittings: ASME B16.23, cast copper or ASME B16.29, wrought copper, solder-joint fittings.
C. Hard Copper Tube: ASTM B 88, Type L and Type M, water tube, drawn temper.
D. Soft Copper Tube: ASTM B 88, Type L, water tube, annealed temper.
E. Copper Pressure Fittings:
   1. Copper Fittings: ASME B16.18, cast-copper-alloy or ASME B16.22, wrought-copper, solder-joint fittings. Furnish wrought-copper fittings if indicated.
   2. Copper Unions: MSS SP-123, copper-alloy, hexagonal-stock body with ball-and-socket, metal-to-metal seating surfaces, and solder-joint or threaded ends.
F. Copper Flanges: ASME B16.24, Class 150, cast copper with solder-joint end.
   1. Flange Gasket Materials: ASME B16.21, full-face, flat, nonmetallic, asbestos-free, 1/8-inch maximum thickness unless thickness or specific material is indicated.
   2. Flange Bolts and Nuts: ASME B18.2.1, carbon steel unless otherwise indicated.
G. Solder: ASTM B 32, lead free with ASTM B 813, water-flushable flux.

2.5 ABS PIPE AND FITTINGS

A. Solid-Wall ABS Pipe: ASTM D 2661, Schedule 40.
B. Cellular-Core ABS Pipe: ASTM F 628, Schedule 40.
C. ABS Socket Fittings: ASTM D 2661, made to ASTM D 3311, drain, waste, and vent patterns.
D. Solvent Cement: ASTM D 2235.
   1. ABS solvent cement shall have a VOC content of 325 g/L or less when calculated according to 40 CFR 59, Subpart D (EPA Method 24).
   2. Solvent cement shall comply with the testing and product requirements of the California Department of Health Services' "Standard Practice for the Testing of Volatile Organic Emissions from Various Sources Using Small-Scale Environmental Chambers."

2.6 PVC PIPE AND FITTINGS

A. Solid-Wall PVC Pipe: ASTM D 2665, drain, waste, and vent.
B. Cellular-Core PVC Pipe: ASTM F 891, Schedule 40.
C. PVC Socket Fittings: ASTM D 2665, made to ASTM D 3311, drain, waste, and vent patterns and to fit Schedule 40 pipe.
D. Adhesive Primer: ASTM F 656.
   1. Adhesive primer shall have a VOC content of 550 g/L or less when calculated according to 40 CFR 59, Subpart D (EPA Method 24).
   2. Adhesive primer shall comply with the testing and product requirements of the California Department of Health Services' "Standard Practice for the Testing of Volatile Organic Emissions from Various Sources Using Small-Scale Environmental Chambers."
E. Solvent Cement: ASTM D 2564.
   1. PVC solvent cement shall have a VOC content of 510 g/L or less when calculated according to 40 CFR 59, Subpart D (EPA Method 24).
   2. Solvent cement shall comply with the testing and product requirements of the California Department of Health Services' "Standard Practice for the Testing of Volatile Organic Emissions from Various Sources Using Small-Scale Environmental Chambers."

2.7 SPECIALTY PIPE FITTINGS

A. Transition Couplings:
   1. General Requirements: Fitting or device for joining piping with small differences in OD's or of different materials. Include end connections same size as and compatible with pipes to be joined.
   2. Fitting-Type Transition Couplings: Manufactured piping coupling or specified piping system fitting.
   3. Unshielded, Nonpressure Transition Couplings:
      a. Standard: ASTM C 1173.
      b. Description: Elastomeric, sleeve-type, reducing or transition pattern. Include shear ring and corrosion-resistant-metal tension band and tightening mechanism on each end.
      c. Sleeve Materials:
         1) For Cast-Iron Soil Pipes: ASTM C 564, rubber.
         2) For Plastic Pipes: ASTM F 477, elastomeric seal or ASTM D 5926, PVC.
         3) For Dissimilar Pipes: ASTM D 5926, PVC or other material compatible with pipe materials being joined.
   4. Shielded, Nonpressure Transition Couplings:
      a. Standard: ASTM C 1460.
      b. Description: Elastomeric or rubber sleeve with full-length, corrosion-resistant outer shield and corrosion-resistant-metal tension band and tightening mechanism on each end.
B. Dielectric Fittings:
   1. General Requirements: Assembly of copper alloy and ferrous materials with separating nonconductive insulating material. Include end connections compatible with pipes to be joined.
   2. Dielectric Unions:
      a. Description:
         1) Standard: ASSE 1079.
         2) Pressure Rating: 125 psig minimum at 180 deg F.
         3) End Connections: Solder-joint copper alloy and threaded ferrous.
   3. Dielectric Nipples:
      a. Description:
         1) Standard: IAPMO PS 66
         2) Electroplated steel nipple.
         3) Pressure Rating: 300 psig at 225 deg F.
         4) End Connections: Male threaded or grooved.
         5) Lining: Inert and noncorrosive, propylene.

2.8 ENCASEMENT FOR UNDERGROUND METAL PIPING

A. Standard: ASTM A 674 or AWWA C105/A 21.5.

PART 3 EXECUTION

3.1 EARTH MOVING

A. Comply with requirements for excavating, trenching, and backfilling specified in Section 312000 "Earth Moving."

3.2 PIPING INSTALLATION

A. Drawing plans, schematics, and diagrams indicate general location and arrangement of piping systems. Indicated locations and arrangements were used to size pipe and calculate friction loss, expansion, pump sizing, and other design considerations. Install piping as indicated unless deviations to layout are approved on coordination drawings.
B. Install piping in concealed locations unless otherwise indicated and except in equipment rooms and service areas.
C. Install piping indicated to be exposed and piping in equipment rooms and service areas at right angles or parallel to building walls. Diagonal runs are prohibited unless specifically indicated otherwise.

D. Install piping above accessible ceilings to allow sufficient space for ceiling panel removal.
E. Install piping to permit valve servicing.
F. Install piping at indicated slopes.
G. Install piping free of sags and bends.
H. Install fittings for changes in direction and branch connections.
I. Install piping to allow application of insulation.
J. Install seismic restraints on piping. Comply with requirements for seismic-restraint devices specified in Section 220548 "Vibration and Seismic Controls for Plumbing Piping and Equipment."
K. Make changes in direction for soil and waste drainage and vent piping using appropriate branches, bends, and long-sweep bends. Sanitary tees and short-sweep 1/4 bends may be used on vertical stacks if change in direction of flow is from horizontal to vertical. Use long-turn, double Y-branch and 1/8-bend fittings if two fixtures are installed back to back or side by side with common drain pipe. Straight tees, elbows, and crosses may be used on vent lines. Do not change direction of flow more than 90 degrees. Use proper size of standard increasers and reducers if pipes of different sizes are connected. Reducing size of drainage piping in direction of flow is prohibited.
L. Lay buried building drainage piping beginning at low point of each system. Install true to grades and alignment indicated, with unbroken continuity of invert. Place hub ends of piping upstream. Install required gaskets according to manufacturer's written instructions for use of lubricants, cements, and other installation requirements. Maintain swab in piping and pull past each joint as completed.
M. Install soil and waste drainage and vent piping at the following minimum slopes unless otherwise indicated:
    1. Building Sanitary Drain: 2 percent downward in direction of flow for piping NPS 3 and smaller; 2 percent downward in direction of flow for piping NPS 4 and larger.
    2. Horizontal Sanitary Drainage Piping: 2 percent downward in direction of flow.
    3. Vent Piping: 1 percent down toward vertical fixture vent or toward vent stack.
N. Install cast-iron soil piping according to CISPI's "Cast Iron Soil Pipe and Fittings Handbook," Chapter IV, "Installation of Cast Iron Soil Pipe and Fittings."
    1. Install encasement on underground piping according to ASTM A 674 or AWWA C105/A 21.5.
O. Install aboveground copper tubing according to CDA's "Copper Tube Handbook."
P. Install aboveground ABS piping according to ASTM D 2661.
Q. Install aboveground PVC piping according to ASTM D 2665.
R. Install underground ABS and PVC piping according to ASTM D 2321.
S. Plumbing Specialties:
    1. Install backwater valves in sanitary waster gravity-flow piping. Comply with requirements for backwater valves specified in Section 221319 "Sanitary Waste Piping Specialties."
    2. Install cleanouts at grade and extend to where building sanitary drains connect to building sanitary sewers in sanitary drainage gravity-flow piping. Install cleanout fitting with closure plug inside the building in sanitary drainage force-main piping. Comply with requirements for cleanouts specified in Section 221319 "Sanitary Waste Piping Specialties."
    3. Install drains in sanitary drainage gravity-flow piping. Comply with requirements for drains specified in Section 221319 "Sanitary Waste Piping Specialties."
T. Do not enclose, cover, or put piping into operation until it is inspected and approved by authorities having jurisdiction.
U. Install sleeves for piping penetrations of walls, ceilings, and floors. Comply with requirements for sleeves specified in Section 220517 "Sleeves and Sleeve Seals for Plumbing Piping."
V. Install sleeve seals for piping penetrations of concrete walls and slabs. Comply with requirements for sleeve seals specified in Section 220517 "Sleeves and Sleeve Seals for Plumbing Piping."
W. Install escutcheons for piping penetrations of walls, ceilings, and floors. Comply with requirements for escutcheons specified in Section 220518 "Escutcheons for Plumbing Piping."

3.3 JOINT CONSTRUCTION

A. Join hub-and-spigot, cast-iron soil piping with gasket joints according to CISPI's "Cast Iron Soil Pipe and Fittings Handbook" for compression joints.
B. Join hub-and-spigot, cast-iron soil piping with calked joints according to CISPI's "Cast Iron Soil Pipe and Fittings Handbook" for lead-and-oakum calked joints.
C. Join hubless, cast-iron soil piping according to CISPI 310 and CISPI's "Cast Iron Soil Pipe and Fittings Handbook" for hubless-piping coupling joints.

D. Join copper tube and fittings with soldered joints according to ASTM B 828. Use ASTM B 813, water-flushable, lead-free flux and ASTM B 32, lead-free-alloy solder.

E. Flanged Joints: Align bolt holes. Select appropriate gasket material, size, type, and thickness. Install gasket concentrically positioned. Use suitable lubricants on bolt threads. Torque bolts in cross pattern.

F. Plastic, Nonpressure-Piping, Solvent-Cement Joints: Clean and dry joining surfaces. Join pipe and fittings according to the following:

1. Comply with ASTM F 402 for safe-handling practice of cleaners, primers, and solvent cements.
2. ABS Piping: Join according to ASTM D 2235 and ASTM D 2661 Appendixes.
3. PVC Piping: Join according to ASTM D 2855 and ASTM D 2665 Appendixes.

3.4 SPECIALTY PIPE FITTING INSTALLATION

A. Transition Couplings:

1. Install transition couplings at joints of piping with small differences in OD's.
2. In Drainage Piping: Unshielded, nonpressure transition couplings.

B. Dielectric Fittings:

1. Install dielectric fittings in piping at connections of dissimilar metal piping and tubing.
2. Dielectric Fittings for NPS 2 and Smaller: Use dielectric nipples.
3. Dielectric Fittings for NPS 2-1/2 to NPS 4: Use dielectric flanges.

3.5 VALVE INSTALLATION

A. General valve installation requirements are specified in Section 220523.12 "Ball Valves for Plumbing Piping," Section 220523.13 "Butterfly Valves for Plumbing Piping," Section 220523.14 "Check Valves for Plumbing Piping," and Section 220523.15 "Gate Valves for Plumbing Piping."

B. Shutoff Valves:

1. Install shutoff valve on each sewage pump discharge.
2. Install gate or full-port ball valve for piping NPS 2 and smaller.
3. Install gate valve for piping NPS 2-1/2 and larger.

C. Check Valves: Install swing check valve, between pump and shutoff valve, on each sewage pump discharge.

3.6 HANGER AND SUPPORT INSTALLATION

A. Comply with requirements for seismic-restraint devices specified in Section 220548 "Vibration and Seismic Controls for Plumbing Piping and Equipment."

B. Comply with requirements for pipe hanger and support devices and installation specified in Section 220529 "Hangers and Supports for Plumbing Piping and Equipment."

1. Install carbon-steel pipe hangers for horizontal piping in noncorrosive environments.
2. Install carbon-steel pipe support clamps for vertical piping in noncorrosive environments.
3. Vertical Piping: MSS Type 8 or Type 42, clamps.
4. Install individual, straight, horizontal piping runs:
   a. 100 Feet and Less: MSS Type 1, adjustable, steel clevis hangers.
   b. Longer Than 100 Feet: MSS Type 43, adjustable roller hangers.
   c. Longer Than 100 Feet if Indicated: MSS Type 49, spring cushion rolls.
5. Multiple, Straight, Horizontal Piping Runs 100 Feet or Longer: MSS Type 44, pipe rolls. Support pipe rolls on trapeze.
6. Base of Vertical Piping: MSS Type 52, spring hangers.

C. Support horizontal piping and tubing within 12 inches of each fitting and coupling.

D. Support vertical piping and tubing at base and at each floor.

E. Rod diameter may be reduced one size for double-rod hangers, with 3/8-inch minimum rods.

F. Install hangers for cast-iron soil piping with the following maximum horizontal spacing and minimum rod diameters:

1. NPS 1-1/2 and NPS 2: 60 inches with 3/8-inch rod.
2. NPS 3: 60 inches with 1/2-inch rod.
3. NPS 4 and NPS 5: 60 inches with 5/8-inch rod.

4. Spacing for 10-foot lengths may be increased to 10 feet. Spacing for fittings is limited to 60 inches.

G. Install supports for vertical cast-iron soil piping every 15 feet.

H. Install hangers for copper tubing with the following maximum horizontal spacing and minimum rod diameters:

1. NPS 1-1/4: 72 inches with 3/8-inch rod.
2. NPS 1-1/2 and NPS 2: 96 inches with 3/8-inch rod.
3. NPS 2-1/2: 108 inches with 1/2-inch rod.
4. NPS 3 and NPS 5: 10 feet with 1/2-inch rod.

I. Install supports for vertical copper tubing every 10 feet.

J. Install hangers for piping with the following maximum horizontal spacing and minimum rod diameters:

1. NPS 1-1/2 and NPS 2: 48 inches with 3/8-inch rod.
2. NPS 3: 48 inches with 1/2-inch rod.
3. NPS 4 and NPS 5: 48 inches with 5/8-inch rod.

K. Install supports for vertical piping every 48 inches.

L. Support piping and tubing not listed above according to MSS SP-69 and manufacturer's written instructions.

3.7 CONNECTIONS

A. Drawings indicate general arrangement of piping, fittings, and specialties.

B. Connect soil and waste piping to exterior sanitary sewerage piping. Use transition fitting to join dissimilar piping materials.

C. Connect drainage and vent piping to the following:

1. Plumbing Fixtures: Connect drainage piping in sizes indicated, but not smaller than required by plumbing code.
2. Plumbing Fixtures and Equipment: Connect atmospheric vent piping in sizes indicated, but not smaller than required by authorities having jurisdiction.
3. Plumbing Specialties: Connect drainage and vent piping in sizes indicated, but not smaller than required by plumbing code.
4. Install test tees (wall cleanouts) in conductors near floor and floor cleanouts with cover flush with floor.
5. Comply with requirements for cleanouts and drains specified in Section 221319 "Sanitary Waste Piping Specialties."
6. Equipment: Connect drainage piping as indicated. Provide shutoff valve if indicated and union for each connection. Use flanges instead of unions for connections NPS 2-1/2 and larger.

D. Where installing piping adjacent to equipment, allow space for service and maintenance of equipment.

E. Make connections according to the following unless otherwise indicated:

1. Install unions, in piping NPS 2 and smaller, adjacent to each valve and at final connection to each piece of equipment.
2. Install flanges, in piping NPS 2-1/2 and larger, adjacent to flanged valves and at final connection to each piece of equipment.

3.8 IDENTIFICATION

A. Identify exposed sanitary waste and vent piping. Comply with requirements for identification specified in Section 220553 "Identification for Plumbing Piping and Equipment."

3.9 FIELD QUALITY CONTROL

A. During installation, notify authorities having jurisdiction at least 24 hours before inspection must be made. Perform tests specified below in presence of authorities having jurisdiction.

1. Roughing-in Inspection: Arrange for inspection of piping before concealing or closing-in after roughing-in and before setting fixtures.
2. Final Inspection: Arrange for final inspection by authorities having jurisdiction to observe tests specified below and to ensure compliance with requirements.

B. Reinspection: If authorities having jurisdiction find that piping will not pass test or inspection, make required corrections and arrange for reinspection.

C. Reports: Prepare inspection reports and have them signed by authorities having jurisdiction.

D. Test sanitary drainage and vent piping according to procedures of authorities having jurisdiction or, in absence of published procedures, as follows:

1. Test for leaks and defects in new piping and parts of existing piping that have been altered, extended, or repaired. If testing is performed in segments, submit separate report for each test, complete with diagram of portion of piping tested.
2. Leave uncovered and unconcealed new, altered, extended, or replaced drainage and vent piping until it has been tested and approved. Expose work that was covered or concealed before it was tested.
3. Roughing-in Plumbing Test Procedure: Test drainage and vent piping except outside leaders on completion of roughing-in. Close openings in piping system and fill with water to point of overflow, but not less than 10-foot head of water. From 15 minutes before inspection starts to completion of inspection, water level must not drop. Inspect joints for leaks.
4. Finished Plumbing Test Procedure: After plumbing fixtures have been set and traps filled with water, test connections and prove they are gastight and watertight. Plug vent-stack openings on roof and building drains where they leave building. Introduce air into piping system equal to pressure of 1-inch wg. Use U-tube or manometer inserted in trap of water closet to measure this pressure. Air pressure must remain constant without introducing additional air throughout period of inspection. Inspect plumbing fixture connections for gas and water leaks.
5. Repair leaks and defects with new materials and retest piping, or portion thereof, until satisfactory results are obtained.
6. Prepare reports for tests and required corrective action.

3.10 CLEANING AND PROTECTION

A. Clean interior of piping. Remove dirt and debris as work progresses.

B. Protect drains during remainder of construction period to avoid clogging with dirt and debris and to prevent damage from traffic and construction work.

C. Place plugs in ends of uncompleted piping at end of day and when work stops.

D. Exposed Piping: Protect plumbing vents exposed to sunlight with two coats of water-based latex paint.

3.11 PIPING SCHEDULE

A. Flanges and unions may be used on aboveground pressure piping unless otherwise indicated.

B. Aboveground, soil and waste piping NPS 4 and smaller shall be the following:

1. Service class, cast-iron soil pipe and fittings; gaskets; and gasketed joints.
2. Hubless, cast-iron soil pipe and fittings; hubless-piping couplings; and coupled joints.
3. Galvanized-steel pipe, drainage fittings, and threaded joints.
4. Stainless-steel pipe and fittings, sealing rings, and gasketed joints.
5. Copper DWV tube, copper drainage fittings, and soldered joints.
6. Solid-wall ABS pipe, ABS socket fittings, and solvent-cemented joints.
7. Solid-wall PVC pipe, PVC socket fittings, and solvent-cemented joints.
8. Dissimilar Pipe-Material Couplings: Unshielded, nonpressure transition couplings.

C. Aboveground, vent piping NPS 4 and smaller shall be the following:

1. Hubless, cast-iron soil pipe and fittings; CISPI hubless-piping couplings; and coupled joints.

D. Underground, soil, waste, and vent piping NPS 4 and smaller shall be the following:

1. Hubless, cast-iron soil pipe and fittings; CISPI cast-iron hubless-piping couplings; and coupled joints.

END OF SECTION

SECTION 221319 - SANITARY WASTE PIPING SPECIALTIES

PART GENERAL

1.1 SUMMARY

A. Section Includes:
1. Cleanouts.
2. Floor drains.
3. Air-admittance valves.
4. Miscellaneous sanitary drainage piping specialties.
5. Flashing materials.

1.2 DEFINITIONS

A. ABS: Acrylonitrile-butadiene-styrene plastic.
B. FRP: Fiberglass-reinforced plastic.
C. HDPE: High-density polyethylene plastic.
D. PE: Polyethylene plastic.
E. PP: Polypropylene plastic.
F. PVC: Polyvinyl chloride plastic.

1.3 ACTION SUBMITTALS

A. Product Data: For each type of product indicated.

1.4 CLOSEOUT SUBMITTALS

A. Operation and Maintenance Data: For drainage piping specialties to include in emergency, operation, and maintenance manuals.

1.5 QUALITY ASSURANCE

A. Drainage piping specialties shall bear label, stamp, or other markings of specified testing agency.
B. Electrical Components, Devices, and Accessories: Listed and labeled as defined in NFPA 70, Article 100, by a testing agency acceptable to authorities having jurisdiction, and marked for intended use.
C. Comply with NSF 14, "Plastics Piping Components and Related Materials," for plastic sanitary piping specialty components.

1.6 COORDINATION

A. Coordinate size and location of roof penetrations.

1.7 MAINTENANCE MATERIAL SUBMITTALS

A. Furnish extra materials described below that match products installed and that are packaged with protective covering for storage and identified with labels describing contents.

PART 2 PRODUCTS

2.1 CLEANOUTS

A. Exposed Metal Cleanouts FCO:
1. ASME A112.36.2M, Cast-Iron Cleanouts:
2. ASME A112.3.1, Stainless-Steel Cleanouts:
3. Standard: ASME A112.36.2M for cast iron for cleanout test tee.

4. Size: Same as connected drainage piping
5. Body Material: Hubless, cast-iron soil pipe test tee as required to match connected piping.
6. Closure: Countersunk, cast-iron plug.
7. Closure Plug Size: Same as or not more than one size smaller than cleanout size.
8. Closure: Stainless-steel plug with seal.

2.2 FLOOR DRAINS

A. Cast-Iron Floor Drains FD-1:
1. Standard: ASME A112.6.3.
2. Pattern: Floor Sanitary drain.
3. Body Material: Gray iron.
4. Seepage Flange: Required.
5. Anchor Flange: Required.
6. Clamping Device: Required.
7. Outlet: Bottom.
8. Coating on Interior and Exposed Exterior Surfaces: Not required.
9. Sediment Bucket: .
10. Top or Strainer Material: Gray iron.
11. Top of Body and Strainer Finish: Nickel bronze.
12. Top Shape: Round.
13. Dimensions of Top or Strainer:
14. Top Loading Classification: Medium Duty.
15. Funnel: Not required.
16. Inlet Fitting: Not required.
17. Trap Material: Cast iron.
18. Trap Pattern: Standard P-trap.
19. Trap Features: Trap-seal primer valve drain connection.

2.3 AIR-ADMITTANCE VALVES

A. Fixture Air-Admittance Valves:
1. Standard: ASSE 1051, Type A for single fixture or Type B for branch piping.
2. Housing: Plastic.
3. Operation: Mechanical sealing diaphragm.
4. Size: Same as connected fixture or branch vent piping.

B. Stack Air-Admittance Valves:
1. Standard: ASSE 1050 for vent stacks.
2. Housing: Plastic.
3. Operation: Mechanical sealing diaphragm.
4. Size: Same as connected stack vent or vent stack.

2.4 ROOF FLASHING ASSEMBLIES

A. Roof Flashing Assemblies:
1. Description: Manufactured assembly made of 4.0-lb/sq. ft., 0.0625-inchthick, lead flashing collar and skirt extending at least 6 inches from pipe, with galvanized-steel boot reinforcement and counterflashing fitting.
   a. Open-Top Vent Cap: Without cap.
   b. Low-Silhouette Vent Cap: With vandal-proof vent cap.
   c. Extended Vent Cap: With field-installed, vandal-proof vent cap.

2.5 MISCELLANEOUS SANITARY DRAINAGE PIPING SPECIALTIES

A. Deep-Seal Traps:

1. Description: Cast-iron or bronze casting, with inlet and outlet matching connected piping and cleanout trap-seal primer valve connection.
2. Size: Same as connected waste piping.
   a. NPS 2: 4-inch-minimum water seal.
   b. NPS 2-1/2 and Larger: 5-inch-minimum water seal.

B. Floor-Drain, Trap-Seal Primer Fittings TP-1:
1. Description: Cast iron, with threaded inlet and threaded or spigot outlet, and trap-seal primer valve connection.
2. Size: Same as floor drain outlet with NPS 1/2 side inlet.

C. Air-Gap Fittings:
1. Standard: ASME A112.1.2, for fitting designed to ensure fixed, positive air gap between installed inlet and outlet piping.
2. Body: Bronze or cast iron.
3. Inlet: Opening in top of body.
4. Outlet: Larger than inlet.
5. Size: Same as connected waste piping and with inlet large enough for associated indirect waste piping.

D. Sleeve Flashing Device:
1. Description: Manufactured, cast-iron fitting, with clamping device, that forms sleeve for pipe floor penetrations of floor membrane. Include galvanized-steel pipe extension in top of fitting that will extend 1 inch above finished floor and galvanized-steel pipe extension in bottom of fitting that will extend through floor slab.
2. Size: As required for close fit to riser or stack piping.

E. Stack Flashing Fittings:
1. Description: Counterflashing-type, cast-iron fitting, with bottom recess for terminating roof membrane, and with threaded or hub top for extending vent pipe.
2. Size: Same as connected stack vent or vent stack.

F. Vent Caps:
1. Description: Cast-iron body with threaded or hub inlet and vandal-proof design. Include vented hood and setscrews to secure to vent pipe.
2. Size: Same as connected stack vent or vent stack.

2.6 FLASHING MATERIALS

A. Lead Sheet: ASTM B 749, Type L51121, copper bearing, with the following minimum weights and thicknesses, unless otherwise indicated:
1. General Use: 4.0-lb/sq. ft., 0.0625-inch thickness.
2. Vent Pipe Flashing: 3.0-lb/sq. ft., 0.0469-inch thickness.
3. Burning: 6-lb/sq. ft., 0.0938-inch thickness.

B. Copper Sheet: ASTM B 152/B 152M, of the following minimum weights and thicknesses, unless otherwise indicated:
1. General Applications: 12 oz./sq. ft..
2. Vent Pipe Flashing: 8 oz./sq. ft..

C. Zinc-Coated Steel Sheet: ASTM A 653/A 653M, with 0.20 percent copper content and 0.04-inch minimum thickness, unless otherwise indicated. Include G90 hot-dip galvanized, mill-phosphatized finish for painting if indicated.

D. Elastic Membrane Sheet: ASTM D 4068, flexible, chlorinated polyethylene, 40-mil minimum thickness.

E. Fasteners: Metal compatible with material and substrate being fastened.

F. Metal Accessories: Sheet metal strips, clamps, anchoring devices, and similar accessory units required for installation; matching or compatible with material being installed.

G. Solder: ASTM B 32, lead-free alloy.

H. Bituminous Coating: SSPC-Paint 12, solvent-type, bituminous mastic.

PART 3 EXECUTION

3.1 INSTALLATION

A. Install cleanouts in aboveground piping and building drain piping according to the following, unless otherwise indicated:
   1. Size same as drainage piping up to NPS 4. Use NPS 4 for larger drainage piping unless larger cleanout is indicated.
   2. Locate at each change in direction of piping greater than 45 degrees.
   3. Locate at minimum intervals of 50 feet for piping NPS 4 and smaller and 100 feet for larger piping.
   4. Locate at base of each vertical soil and waste stack.
B. For floor cleanouts for piping below floors, install cleanout deck plates with top flush with finished floor.
C. For cleanouts located in concealed piping, install cleanout wall access covers, of types indicated, with frame and cover flush with finished wall.
D. Install floor drains at low points of surface areas to be drained. Set grates of drains flush with finished floor, unless otherwise indicated.
   1. Position floor drains for easy access and maintenance.
   2. Set floor drains below elevation of surrounding finished floor to allow floor drainage. Set with grates depressed according to the following drainage area radii:
      a. Radius, 30 Inches or Less: Equivalent to 1 percent slope, but not less than 1/4-inch total depression.
      b. Radius, 30 to 60 Inches: Equivalent to 1 percent slope.
      c. Radius, 60 Inches or Larger: Equivalent to 1 percent slope, but not greater than 1-inch total depression.
   3. Install floor-drain flashing collar or flange so no leakage occurs between drain and adjoining flooring. Maintain integrity of waterproof membranes where penetrated.
   4. Install individual traps for floor drains connected to sanitary building drain, unless otherwise indicated.
E. Install fixture air-admittance valves on fixture drain piping.
F. Install stack air-admittance valves at top of stack vent and vent stack piping.
G. Install roof flashing assemblies on sanitary stack vents and vent stacks that extend through roof.
H. Install flashing fittings on sanitary stack vents and vent stacks that extend through roof.
I. Install deep-seal traps on floor drains and other waste outlets, if indicated.
J. Install floor-drain, trap-seal primer fittings on inlet to floor drains that require trap-seal primer connection.
   1. Exception: Fitting may be omitted if trap has trap-seal primer connection.
   2. Size: Same as floor drain inlet.
K. Install air-gap fittings on draining-type backflow preventers and on indirect-waste piping discharge into sanitary drainage system.
L. Install sleeve flashing device with each riser and stack passing through floors with waterproof membrane.
M. Install vent caps on each vent pipe passing through roof.
N. Install traps on plumbing specialty drain outlets. Omit traps on indirect wastes unless trap is indicated.

3.2 CONNECTIONS

A. Comply with requirements in Section 221316 "Sanitary Waste and Vent Piping" for piping installation requirements. Drawings indicate general arrangement of piping, fittings, and specialties.
B. Install piping adjacent to equipment to allow service and maintenance.

3.3 FLASHING INSTALLATION

A. Fabricate flashing from single piece unless large pans, sumps, or other drainage shapes are required. Join flashing according to the following if required:
   1. Lead Sheets: Burn joints of lead sheets 6.0-lb/sq. ft., 0.0938-inch thickness or thicker. Solder joints of lead sheets 4.0-lb/sq. ft., 0.0625-inch thickness or thinner.
   2. Copper Sheets: Solder joints of copper sheets.

B. Install sheet flashing on pipes, sleeves, and specialties passing through or embedded in floors and roofs with waterproof membrane.
   1. Pipe Flashing: Sleeve type, matching pipe size, with minimum length of 10 inches, and skirt or flange extending at least 8 inches around pipe.
   2. Sleeve Flashing: Flat sheet, with skirt or flange extending at least 8 inches around sleeve.
   3. Embedded Specialty Flashing: Flat sheet, with skirt or flange extending at least 8 inches around specialty.
C. Set flashing on floors and roofs in solid coating of bituminous cement.
D. Secure flashing into sleeve and specialty clamping ring or device.
E. Install flashing for piping passing through roofs with counterflashing or commercially made flashing fittings, according to Section 076200 "Sheet Metal Flashing and Trim."
F. Extend flashing up vent pipe passing through roofs and turn down into pipe, or secure flashing into cast-iron sleeve having calking recess.
G. Fabricate and install flashing and pans, sumps, and other drainage shapes.

3.4 PROTECTION

A. Protect drains during remainder of construction period to avoid clogging with dirt or debris and to prevent damage from traffic or construction work.
B. Place plugs in ends of uncompleted piping at end of each day or when work stops.

END OF SECTION

SECTION 223300 - ELECTRIC, DOMESTIC-WATER HEATERS

PART 1 GENERAL

1.1 SUMMARY

A. Section Includes:
1. Commercial, electric, storage, domestic-water heaters.
2. Commercial, light-duty, storage, electric, domestic-water heaters.
3. Thermostat-control, electric, tankless, domestic-water heaters.
4. Domestic-water heater accessories.

1.2 PERFORMANCE REQUIREMENTS

A. Seismic Performance: Commercial domestic-water heaters shall withstand the effects of earthquake motions determined according to ASCE/SEI 7.
1. The term "withstand" means "the unit will remain in place without separation of any parts from the device when subjected to the seismic forces specified."

1.3 ACTION SUBMITTALS

A. Product Data: For each type and size of domestic-water heater indicated.
B. Shop Drawings:
1. Wiring Diagrams: For power, signal, and control wiring.

1.4 INFORMATIONAL SUBMITTALS

A. Seismic Qualification Certificates: For commercial domestic-water heaters, accessories, and components, from manufacturer.
B. Product Certificates: For each type of commercial and tankless, electric, domestic-water heater, from manufacturer.
C. Domestic-Water Heater Labeling: Certified and labeled by testing agency acceptable to authorities having jurisdiction.
D. Source quality-control reports.
E. Field quality-control reports.
F. Warranty: Sample of special warranty.

1.5 CLOSEOUT SUBMITTALS

A. Operation and Maintenance Data: For electric, domestic-water heaters to include in emergency, operation, and maintenance manuals.

1.6 QUALITY ASSURANCE

A. Electrical Components, Devices, and Accessories: Listed and labeled as defined in NFPA 70, by a qualified testing agency, and marked for intended location and application.
B. ASHRAE/IESNA Compliance: Applicable requirements in ASHRAE/IESNA 90.1.
C. ASME Compliance: Where ASME-code construction is indicated, fabricate and label commercial, domestic-water heater storage tanks to comply with ASME Boiler and Pressure Vessel Code: Section VIII, Division 1.
D. NSF Compliance: Fabricate and label equipment components that will be in contact with potable water to comply with NSF 61 Annex G, "Drinking Water System Components - Health Effects."

1.7 COORDINATION

A. Coordinate sizes and locations of concrete bases with actual equipment provided.

1.8 WARRANTY

A. Special Warranty: Manufacturer's standard form in which manufacturer agrees to repair or replace components of electric, domestic-water heaters that fail in materials or workmanship within specified warranty period.
   1. Failures include, but are not limited to, the following:
      a. Structural failures including storage tank and supports.
      b. Faulty operation of controls.
      c. Deterioration of metals, metal finishes, and other materials beyond normal use.
   2. Warranty Periods: From date of Substantial Completion.
      a. Commercial, Electric, Storage, Domestic-Water Heaters:
         1) Storage Tank: Three years.
         2) Controls and Other Components: Three years.
      b. Commercial, Light-Duty, Storage, Electric, Domestic-Water Heaters:
         1) Storage Tank: Three years.
         2) Controls and Other Components: Two years.
      c. Electric, Tankless, Domestic-Water Heaters: One year(s).
      d. Compression Tanks: Five years.

PART 2 PRODUCTS

2.1 COMMERCIAL, ELECTRIC, DOMESTIC-WATER HEATERS

A. Commercial, Electric, Storage, Domestic-Water Heaters:
   1. Manufacturers: Subject to compliance with requirements, provide products by the following:
      a. Smith, A. O. Corporation.
   2. Standard: UL 1453.
   3. Storage-Tank Construction: ASME-code, steel vertical arrangement.
      a. Tappings: Factory fabricated of materials compatible with tank and piping connections. Attach tappings to tank before testing.
         1) NPS 2 and Smaller: Threaded ends according to ASME B1.20.1.
      b. Pressure Rating: 150 psig.
      c. Interior Finish: Comply with NSF 61 Annex G barrier materials for potable-water tank linings, including extending lining material into tappings.
   4. Factory-Installed Storage-Tank Appurtenances:
      a. Anode Rod: Replaceable magnesium.
      b. Drain Valve: Corrosion-resistant metal complying with ASSE 1005.
      c. Insulation: Comply with ASHRAE/IESNA 90.1.
      d. Jacket: Steel with enameled finish.
      e. Heating Elements: Electric, screw-in or bolt-on immersion type arranged in multiples of three.
      f. Temperature Control: Adjustable thermostat.
      g. Safety Controls: High-temperature-limit and low-water cutoff devices or systems.
      h. Relief Valves: ASME rated and stamped for combination temperature-and-pressure relief valves. Include one or more relief valves with total relieving capacity at least as great as heat input, and include pressure setting less than domestic-water heater working-pressure rating. Select one relief valve with sensing element that extends into storage tank.
   5. Special Requirements: NSF 5 construction.
B. Commercial, Light-Duty, Storage, Electric, Domestic-Water Heaters:
   1. Manufacturers: Subject to compliance with requirements, provide products by the following:
      a. Smith, A. O. Corporation.
   2. Standard: UL 174.
   3. Storage-Tank Construction: Steel, vertical arrangement.
      a. Tappings: ASME B1.20.1 pipe thread.

b. Pressure Rating: 150 psig.
c. Interior Finish: Comply with NSF 61 Annex G barrier materials for potable-water tank linings, including extending lining material into tappings.

4. Factory-Installed Storage-Tank Appurtenances:
a. Anode Rod: Replaceable magnesium.
b. Dip Tube: Required unless cold-water inlet is near bottom of tank.
c. Drain Valve: ASSE 1005.
d. Insulation: Comply with ASHRAE/IESNA 90.1.
e. Jacket: Steel with enameled finish.
f. Heat-Trap Fittings: Inlet type in cold-water inlet and outlet type in hot-water outlet.
g. Heating Elements: Two; electric, screw-in immersion type; wired for simultaneous operation unless otherwise indicated. Limited to 12 kW total.
h. Temperature Control: Adjustable thermostat.
i. Safety Control: High-temperature-limit cutoff device or system.
j. Relief Valve: ASME rated and stamped for combination temperature-and-pressure relief valves. Include relieving capacity at least as great as heat input, and include pressure setting less than domestic-water heater working-pressure rating. Select relief valve with sensing element that extends into storage tank.

5. Special Requirements: NSF 5 construction with legs for off-floor installation.

C. Capacity and Characteristics:
1. Capacity: Refer to Plumbing Equipment Schedule.
2. Recovery: at temperature rise.
3. Temperature Setting: .
4. Power Demand: .
5. Heating Elements:
a. Number of Elements: Two.
b. Kilowatts Each Element: .
c. Number of Stages: .

6. Electrical Characteristics:
a. Volts: 120.
b. Phases: Single.
c. Hertz: 60.
d. Full-Load Amperes: .
e. Minimum Circuit Ampacity: .
f. Maximum Overcurrent Protection: .

2.2 ELECTRIC, TANKLESS, DOMESTIC-WATER HEATERS

A. Thermostat-Control, Electric, Tankless, Domestic-Water Heaters:
1. Manufacturers: Subject to compliance with requirements, provide products by the following:
a. Chronomite Laboratories, Inc.

2. Standard: UL 499 for electric, tankless, (domestic-water heater) heating appliance.
3. Construction: Copper piping or tubing complying with NSF 61 Annex G barrier materials for potable water, without storage capacity.
a. Connections: ASME B1.20.1 pipe thread.
b. Pressure Rating: 150 psig.
c. Heating Element: Resistance heating system.
d. Temperature Control: Thermostat.
e. Safety Control: High-temperature-limit cutoff device or system.
f. Jacket: Aluminum or steel with enameled finish or plastic.

4. Support: Bracket for wall mounting.
5. Capacity and Characteristics:
a. Flow Rate: 1.0 gpm at 100 deg F temperature rise.
b. Temperature Setting: 110 deg F..

c. Power Demand: .

d. Electrical Characteristics:

1) Volts: 120.

2) Phases: Single.

3) Hertz: 60.

4) Full-Load Amperes: .

5) Minimum Circuit Ampacity: .

6) Maximum Overcurrent Protection: .

2.3 DOMESTIC-WATER HEATER ACCESSORIES

A. Domestic-Water Compression Tanks:

1. Manufacturers: Subject to compliance with requirements, provide products by the following:

   a. AMTROL, Inc.

2. Description: Steel pressure-rated tank constructed with welded joints and factory-installed butyl-rubber diaphragm. Include air precharge to minimum system-operating pressure at tank.

3. Construction:

   a. Tappings: Factory-fabricated steel, welded to tank before testing and labeling. Include ASME B1.20.1 pipe thread.

   b. Interior Finish: Comply with NSF 61 Annex G barrier materials for potable-water tank linings, including extending finish into and through tank fittings and outlets.

   c. Air-Charging Valve: Factory installed.

4. Capacity and Characteristics:

   a. Working-Pressure Rating: 150 psig.

   b. Capacity Acceptable: Refer to Plumbing Equipment Schedule. minimum.

   c. Air Precharge Pressure: .

B. Drain Pans: Corrosion-resistant metal with raised edge. Comply with ANSI/CSA LC 3. Include dimensions not less than base of domestic-water heater, and include drain outlet not less than NPS 3/4 with ASME B1.20.1 pipe threads or with ASME B1.20.7 garden-hose threads.

C. Piping-Type Heat Traps: Field-fabricated piping arrangement according to ASHRAE/IESNA 90.1.

D. Heat-Trap Fittings: ASHRAE 90.2.

E. Manifold Kits: Domestic-water heater manufacturer's factory-fabricated inlet and outlet piping for field installation, for multiple domestic-water heater installation. Include ball-, butterfly-, or gate-type shutoff valves to isolate each domestic-water heater and memory-stop balancing valves to provide balanced flow through each domestic-water heater.

1. Comply with requirements for ball-, butterfly-, or gate-type shutoff valves specified in Section 220523.12 "Ball Valves for Plumbing Piping," Section 220523.13 "Butterfly Valves for Plumbing Piping," and Section 220523.15 "Gate Valves for Plumbing Piping."

2. Comply with requirements for balancing valves specified in Section 221119 "Domestic Water Piping Specialties."

F. Pressure-Reducing Valves: ASSE 1003 for water. Set at 25-psig-maximum outlet pressure unless otherwise indicated.

G. Combination Temperature-and-Pressure Relief Valves: ASME rated and stamped. Include relieving capacity at least as great as heat input, and include pressure setting less than domestic-water heater working-pressure rating. Select relief valves with sensing element that extends into storage tank.

H. Pressure Relief Valves: ASME rated and stamped. Include pressure setting less than domestic-water heater working-pressure rating.

I. Vacuum Relief Valves: ANSI Z21.22/CSA 4.4.

J. Shock Absorbers: ASSE 1010 or PDI-WH 201, Size A water hammer arrester.

K. Domestic-Water Heater Stands: Manufacturer's factory-fabricated steel stand for floor mounting, capable of supporting domestic-water heater and water. Include dimension that will support bottom of domestic-water heater a minimum of 18 inches above the floor.

L. Domestic-Water Heater Mounting Brackets: Manufacturer's factory-fabricated steel bracket for wall mounting, capable of supporting domestic-water heater and water.

2.4 SOURCE QUALITY CONTROL

A. Factory Tests: Test and inspect domestic-water heaters specified to be ASME-code construction, according to ASME Boiler and Pressure Vessel Code.

B. Hydrostatically test commercial domestic-water heaters to minimum of one and one-half times pressure rating before shipment.

C. Electric, domestic-water heaters will be considered defective if they do not pass tests and inspections. Comply with requirements in Section 014000 "Quality Requirements" for retesting and reinspecting requirements and Section 017300 "Execution" for requirements for correcting the Work.

D. Prepare test and inspection reports.

PART 3 EXECUTION

3.1 DOMESTIC-WATER HEATER INSTALLATION

A. Commercial, Electric, Domestic-Water Heater Mounting: Install commercial, electric, domestic-water heaters on concrete base.

1. Exception: Omit concrete bases for commercial, electric, domestic-water heaters if installation on stand, bracket, suspended platform, or directly on floor is indicated.
2. Maintain manufacturer's recommended clearances.
3. Arrange units so controls and devices that require servicing are accessible.
4. Install dowel rods to connect concrete base to concrete floor. Unless otherwise indicated, install dowel rods on 18-inch centers around the full perimeter of concrete base.
5. For supported equipment, install epoxy-coated anchor bolts that extend through concrete base and anchor into structural concrete floor.
6. Place and secure anchorage devices. Use setting drawings, templates, diagrams, instructions, and directions furnished with items to be embedded.
7. Install anchor bolts to elevations required for proper attachment to supported equipment.
8. Anchor domestic-water heaters to substrate.

B. Electric, Tankless, Domestic-Water Heater Mounting: Install electric, tankless, domestic-water heaters at least 18 inches above floor on wall bracket.

1. Maintain manufacturer's recommended clearances.
2. Arrange units so controls and devices that require servicing are accessible.
3. Place and secure anchorage devices. Use setting drawings, templates, diagrams, instructions, and directions furnished with items to be embedded.
4. Install anchor bolts to elevations required for proper attachment to supported equipment.
5. Anchor domestic-water heaters to substrate.

C. Install electric, domestic-water heaters level and plumb, according to layout drawings, original design, and referenced standards. Maintain manufacturer's recommended clearances. Arrange units so controls and devices needing service are accessible.

1. Install shutoff valves on domestic-water-supply piping to domestic-water heaters and on domestic-hot-water outlet piping. Comply with requirements for shutoff valves specified in Section 220523.12 "Ball Valves for Plumbing Piping," Section 220523.13 "Butterfly Valves for Plumbing Piping," and Section 220523.15 "Gate Valves for Plumbing Piping."

D. Install commercial, electric, domestic-water heaters with seismic-restraint devices. Comply with requirements for seismic-restraint devices specified in Section 220548 "Vibration and Seismic Controls for Plumbing Piping and Equipment."

E. Install combination temperature-and-pressure relief valves in top portion of storage tanks. Use relief valves with sensing elements that extend into tanks. Extend commercial-water-heater relief-valve outlet, with drain piping same as domestic-water piping in continuous downward pitch, and discharge by positive air gap onto closest floor drain.

F. Installpressure relief valves in water piping for electric, domestic-water heaters without storage. Extend commercial-water-heater relief-valve outlet, with drain piping same as domestic-water piping in continuous downward pitch, and discharge by positive air gap onto closest floor drain.

G. Install water-heater drain piping as indirect waste to spill by positive air gap into open drains or over floor drains. Install hose-end drain valves at low points in water piping for electric, domestic-water heaters that

do not have tank drains. Comply with requirements for hose-end drain valves specified in Section 221119 "Domestic Water Piping Specialties."

H. Install thermometers on outlet piping of electric, domestic-water heaters. Comply with requirements for thermometers specified in Section 220519 "Meters and Gages for Plumbing Piping."

I. Install thermometers on inlet and outlet piping of residential, solar, electric, domestic-water heaters. Comply with requirements for thermometers specified in Section 220519 "Meters and Gages for Plumbing Piping."

J. Install piping-type heat traps on inlet and outlet piping of electric, domestic-water heater storage tanks without integral or fitting-type heat traps.

K. Fill electric, domestic-water heaters with water.

L. Charge domestic-water compression tanks with air.

3.2 CONNECTIONS

A. Comply with requirements for piping specified in Section 221116 "Domestic Water Piping." Drawings indicate general arrangement of piping, fittings, and specialties.

B. Where installing piping adjacent to electric, domestic-water heaters, allow space for service and maintenance of water heaters. Arrange piping for easy removal of domestic-water heaters.

3.3 IDENTIFICATION

A. Identify system components. Comply with requirements for identification specified in Section 220553 "Identification for Plumbing Piping and Equipment."

3.4 FIELD QUALITY CONTROL

A. Perform tests and inspections.

1. Manufacturer's Field Service: Engage a factory-authorized service representative to inspect components, assemblies, and equipment installations, including connections, and to assist in testing.
2. Leak Test: After installation, charge system and test for leaks. Repair leaks and retest until no leaks exist.
3. Operational Test: After electrical circuitry has been energized, start units to confirm proper operation.
4. Test and adjust controls and safeties. Replace damaged and malfunctioning controls and equipment.

B. Electric, domestic-water heaters will be considered defective if they do not pass tests and inspections. Comply with requirements in Section 014000 "Quality Requirements" for retesting and reinspecting requirements and Section 017300 "Execution" for requirements for correcting the Work.

C. Prepare test and inspection reports.

3.5 DEMONSTRATION

A. Owner's maintenance personnel to adjust, operate, and maintain commercial and tankless, electric, domestic-water heaters.

END OF SECTION

SECTION 224216.16 - COMMERCIAL SINKS

PART 1 GENERAL

1.1 SUMMARY

A. Section Includes:
1. Service sinks.
2. Handwash sinks.
3. Sink faucets.
4. Supply fittings.
5. Waste fittings.

1.2 ACTION SUBMITTALS

A. Product Data: For each type of product.
1. Include construction details, material descriptions, dimensions of individual components and profiles, and finishes for sinks.
2. Include furnished specialties and accessories.

1.3 INFORMATIONAL SUBMITTALS

A. Coordination Drawings: Counter cutout templates for mounting of counter-mounted lavatories.

1.4 CLOSEOUT SUBMITTALS

A. Maintenance Data: For sinks to include in maintenance manuals.

PART 2 PRODUCTS

2.1 SERVICE SINKS

A. Refer to Plumbing Equipment Schedule on plumbing plans.

2.2 BREAKROOM SINKS

A. Refer to Plumbing Equipment Schedule on plumbing plans.
B. Breakroom Sinks: Stainless steel, countertop mounted.
C. NSF Standard: Comply with NSF/ANSI 61 Annex G, "Drinking Water System Components - Health Effects," for faucet-spout materials that will be in contact with potable water.
D. Sink Faucets: Refer to Plumbing Equipment Schedule on plumbing plans.

2.3 SUPPLY FITTINGS

A. NSF Standard: Comply with NSF/ANSI 61 Annex G, "Drinking Water System Components - Health Effects," for supply-fitting materials that will be in contact with potable water.
B. Standard: ASME A112.18.1/CSA B125.1.
C. Supply Piping: Chrome-plated brass pipe or chrome-plated copper tube matching water-supply piping size. Include chrome-plated brass or stainless-steel wall flange.
D. Supply Stops: Chrome-plated brass, one-quarter-turn, ball-type or compression valve with inlet connection matching supply piping.
E. Operation: Loose key.
F. Risers:
1. NPS 1/2
2. Chrome-plated, rigid-copper pipe.

2.4 WASTE FITTINGS

A. Standard: ASME A112.18.2/CSA B125.2.
B. Drain: Grid type with NPS 1-1/2 offset and straight tailpiece.
C. Trap:
   1. Size: NPS 1-1/2.
   2. Material: Chrome-plated, two-piece, cast-brass trap and swivel elbow with 0.032-inch-thick brass tube to wall; and chrome-plated brass or steel wall flange.
   3. Material: Stainless-steel, two-piece trap and swivel elbow with 0.012-inch-thick stainless-steel tube to wall; and stainless-steel wall flange.

2.5 GROUT

A. Standard: ASTM C 1107/C 1107M, Grade B, post-hardening and volume-adjusting, dry, hydraulic-cement grout.
B. Characteristics: Nonshrink; recommended for interior and exterior applications.
C. Design Mix: 5000-psi, 28-day compressive strength.
D. Packaging: Premixed and factory packaged.

PART 3 EXECUTION

3.1 EXAMINATION

A. Examine roughing-in of water supply and sanitary drainage and vent piping systems to verify actual locations of piping connections before sink installation.
B. Examine walls, floors, and counters for suitable conditions where sinks will be installed.
C. Proceed with installation only after unsatisfactory conditions have been corrected.

3.2 INSTALLATION

A. Install sinks level and plumb according to roughing-in drawings.
B. Install supports, affixed to building substrate, for wall-hung sinks.
C. Install accessible wall-mounted sinks at handicapped/elderly mounting height according to ICC/ANSI A117.1.
D. Set floor-mounted sinks in leveling bed of cement grout.
E. Install water-supply piping with stop on each supply to each sink faucet.
   1. Exception: Use ball or gate valves if supply stops are not specified with sink. Comply with valve requirements specified in Section 220523.12 "Ball Valves for Plumbing Piping" and Section 220523.15 "Gate Valves for Plumbing Piping."
   2. Install stops in locations where they can be easily reached for operation.
F. Install wall flanges or escutcheons at piping wall penetrations in exposed, finished locations. Use deep-pattern escutcheons if required to conceal protruding fittings. Comply with escutcheon requirements specified in Section 220518 "Escutcheons for Plumbing Piping."
G. Seal joints between sinks and counters, floors, and walls using sanitary-type, one-part, mildew-resistant silicone sealant. Match sealant color to fixture color. Comply with sealant requirements specified in Section 079200 "Joint Sealants."
H. Install protective shielding pipe covers and enclosures on exposed supplies and waste piping of accessible sinks. Comply with requirements in Section 220719 "Plumbing Piping Insulation."

3.3 CONNECTIONS

A. Connect sinks with water supplies, stops, and risers, and with traps, soil, waste, and vent piping. Use size fittings required to match fixtures.
B. Comply with water piping requirements specified in Section 221116 "Domestic Water Piping."
C. Comply with soil and waste piping requirements specified in Section 221316 "Sanitary Waste and Vent Piping."

3.4 ADJUSTING

A. Operate and adjust sinks and controls. Replace damaged and malfunctioning sinks, fittings, and controls.
B. Adjust water pressure at faucets to produce proper flow.

3.5 CLEANING AND PROTECTION

A. After completing installation of sinks, inspect and repair damaged finishes.
B. Clean sinks, faucets, and other fittings with manufacturers' recommended cleaning methods and materials.
C. Provide protective covering for installed sinks and fittings.
D. Do not allow use of sinks for temporary facilities unless approved in writing by Owner.

END OF SECTION

SECTION 226113 - COMPRESSED-AIR PIPING FOR LABORATORY AND HEALTHCARE FACILITIES

PART 1 GENERAL

1.1 SUMMARY

A. Section Includes:
   1. Gas-powered-tool compressed-air piping, designated "instrument air."
   2. Compressed-air piping and specialties for nonmedical laboratory facilities, designated "laboratory air."
B. Related Requirements:
   1. Section 226119 "Compressed-Air Equipment for Laboratory and Healthcare Facilities" for air compressors and specialties.

1.2 DEFINITIONS

A. Nonmedical compressed-air piping systems include laboratory air piping systems.

1.3 ACTION SUBMITTALS

A. Product Data: For each type of product.

1.4 INFORMATIONAL SUBMITTALS

A. Qualification Data: For Installer.
B. Seismic Qualification Certificates: For compressed-air manifolds, accessories, and components, from manufacturer.
   1. Basis for Certification: Indicate whether withstand certification is based on actual test of assembled components or on calculation.
   2. Dimensioned Outline Drawings of Equipment Unit: Identify center of gravity and locate and describe mounting and anchorage provisions.
   3. Detailed description of equipment anchorage devices on which the certification is based and their installation requirements.
C. Brazing certificates.
D. Field quality-control reports.

1.5 CLOSEOUT SUBMITTALS

A. Operation and Maintenance Data: For compressed-air piping specialties to include in emergency, operation, and maintenance manuals.

1.6 QUALITY ASSURANCE

A. Installer Qualifications:
   1. Shape-Memory-Metal Coupling Joints: An authorized representative who is trained and approved by manufacturer.
B. Testing Agency Qualifications: An independent testing agency, with the experience and capability to conduct the vacuum piping testing indicated, that is an NRTL, and that is acceptable to authorities having jurisdiction.
C. Brazing: Qualify processes and operators according to ASME Boiler and Pressure Vessel Code, Section IX, "Welding and Brazing Qualifications"; or AWS B2.2, "Standard for Brazing Procedure and Performance Qualification."

PART 2 PRODUCTS

2.1 SYSTEM DESCRIPTION

A. Powerex SEO4007HP
   1. 40 HP motor
   2. Scroll enclosed air compressor system, oil free compressed air.
   3. Capacity at 100 SCFM at 100 PSIG. Provide with (8) pumps at 5 HP per pump.
   4. Max pressure 145 psig
B. Kaishan KRSD100-150V
   1. 100 HP motor
   2. Variable speed drive rotary screw air compressor
   3. 400 SCFM at 150 PSIG
C. Refrigerated Dryer
   1. Nano DX 105
      a. 105 SCFM
      b. Direct Expansion refrigerated air dryer
      c. 1” npt connection
   2. Nano DX0500N
      a. 500 SCFM
      b. Direct Expansion refrigerated air dryer
      c. 2-1/2” npt connection

2.2 PIPES, TUBES, AND FITTINGS

A. Comply with NFPA 99 for medical air piping materials.
B. Comply with ASME B31.9, "Building Services Piping," for laboratory air piping operating at 150 psig or less.
C. Copper Medical Gas Tube: ASTM B 819, Type K, seamless, drawn temper, that has been manufacturer cleaned, purged, and sealed for medical gas service or according to CGA G-4.1 for oxygen service.
D. Wrought-Copper Fittings: ASME B16.22, solder-joint pressure type that has been manufacturer cleaned, purged, and bagged for oxygen service according to CGA G-4.1.
E. Copper Unions: ASME B16.22 or MSS SP-123, wrought-copper or cast-copper alloy.
F. Cast-Copper-Alloy Flanges: ASME B16.24, Class 150.
   1. Pipe-Flange Gasket Materials: ASME B16.21, nonmetallic, flat, asbestos free, 1/8-inch maximum thickness, full-face type.
   2. Flange Bolts and Nuts: ASME B18.2.1, carbon steel.
G. Flexible Pipe Connectors:
   1. Description: Corrugated-bronze tubing with bronze wire-braid covering and ends brazed to inner tubing.
      a. Working-Pressure Rating: 200 psig minimum.
      b. End Connections: Plain-end copper tube.

2.3 JOINING MATERIALS

A. Brazing Filler Metals: AWS A5.8/A5.8M, BCuP Series, copper-phosphorus alloys.
B. Threaded-Joint Tape: PTFE.

2.4 VALVES

A. Ball Valves:
   1. Standard: MSS SP-110.
   2. Description: Three-piece body, brass or bronze.
   3. Pressure Rating: 300 psig minimum.

4. Ball: Full-port, chrome-plated brass.
5. Seats: PTFE or TFE.
6. Stem: Blowout proof with PTFE or TFE seal.

B. Check Valves:
1. Description: In-line pattern, bronze.
2. Pressure Rating: 300 psig minimum.
3. Operation: Spring loaded.
4. Ends: Manufacturer-installed ASTM B 819, copper-tube extensions.

C. Safety Valves:
1. Bronze body.
2. ASME-construction, poppet, pressure-relief type.
3. Settings to match system requirements.

D. Pressure Regulators:
1. Bronze body and trim.
2. Spring-loaded, diaphragm-operated, relieving type.
3. Manual pressure-setting adjustment.
4. Rated for 250-psig minimum inlet pressure.
5. Capable of controlling delivered air pressure within 0.5 psig for each 10-psig inlet pressure.

PART 3 EXECUTION

3.1 PIPING INSTALLATION

A. Drawing plans, schematics, and diagrams indicate general location and arrangement of compressed-air piping. Indicated locations and arrangements were used to size pipe and calculate friction loss, expansion, air-compressor sizing, and other design considerations. Install piping as indicated unless deviations to layout are approved on coordination drawings.

B. Comply with NFPA 99 for installation of compressed-air piping.

C. Install piping concealed from view and protected from physical contact by building occupants unless otherwise indicated and except in equipment rooms and service areas.

D. Install piping indicated to be exposed and piping in equipment rooms and service areas at right angles or parallel to building walls. Diagonal runs are prohibited unless specifically indicated otherwise.

E. Install piping above accessible ceilings to allow sufficient space for ceiling panel removal and coordinate with other services occupying that space.

F. Install piping adjacent to equipment and specialties to allow service and maintenance.

G. Install compressed-air piping with 1 percent slope downward in direction of flow.

H. Install nipples, unions, special fittings, and valves with pressure ratings same as or higher than system pressure rating used in applications specified in "Piping Schedule" Article unless otherwise indicated.

I. Install eccentric reducers, if available, where compressed-air piping is reduced in direction of flow, with bottoms of both pipes and reducer fitting flush.

J. Install branch connections to compressed-air mains from top of main. Provide drain leg and drain trap at end of each main and branch and at low points.

K. Install thermometer and pressure gage on discharge piping from each air compressor and on each receiver. Comply with requirements in Section 220519 "Meters and Gages for Plumbing Piping."

L. Install piping to permit valve servicing.

M. Install piping free of sags and bends.

N. Install fittings for changes in direction and for branch connections.

O. Piping Restraint Installation: Install seismic restraints on compressed-air piping. Seismic-restraint devices are specified in Section 220548 "Vibration and Seismic Controls for Plumbing Piping and Equipment."

P. Install compressed-air service connections recessed in walls. Attach roughing-in assembly to substrate; attach finishing assembly to roughing-in assembly.

Q. Connect compressed-air piping to air compressors and to compressed-air outlets and equipment requiring compressed-air service.

R. Install unions in copper compressed-air tubing adjacent to each valve and at final connection to each machine, specialty, and piece of equipment.

S. Install sleeves for piping penetrations of walls, ceilings, and floors. Comply with requirements for sleeves specified in Section 220517 "Sleeves and Sleeve Seals for Plumbing Piping."

T. Install escutcheons for piping penetrations of walls, ceilings, and floors. Comply with requirements for escutcheons specified in Section 220518 "Escutcheons for Plumbing Piping."

3.2 VALVE INSTALLATION

A. Install shutoff valve at each connection to and from compressed-air equipment and specialties.

B. Install check valves to maintain correct direction of compressed-air flow from compressed-air equipment.

C. Install valve boxes recessed in wall and anchored to substrate. Single boxes may be used for multiple valves that serve same area or function.

D. Install zone valves and gages in valve boxes. Rotate valves to angle that prevents closure of cover when valve is in closed position.

E. Install pressure regulators on compressed-air piping where reduced pressure is required.

F. Install flexible pipe connectors in discharge piping of each air compressor.

3.3 JOINT CONSTRUCTION

A. Remove scale, slag, dirt, and debris from outside of cleaned tubing and fittings before assembly.

B. Threaded Joints: Apply appropriate tape to external pipe threads.

C. Brazed Joints: Join copper tube and fittings according to CDA's "Copper Tube Handbook," "Brazed Joints" chapter. Continuously purge joint with oil-free dry nitrogen during brazing.

D. Flanged Joints: Install flange on copper tubes. Use pipe-flange gasket between flanges. Join flanges with gasket and bolts according to ASME B31.9 for bolting procedure.

E. Shape-Memory-Metal Coupling Joints: Join new copper tube to existing tube according to procedures developed by fitting manufacturer for installation of shape-memory-metal coupling joints.

3.4 COMPRESSED-AIR SERVICE COMPONENT INSTALLATION

A. Install compressed-air pressure control panel in walls. Attach to substrate.

B. Install compressed-air manifolds anchored to substrate.

C. Install compressed-air cylinders and connect to manifold piping.

D. Install compressed-air manifolds with seismic restraints as indicated.

E. Install compressed-air-cylinder wall storage racks attached to substrate.

3.5 HANGER AND SUPPORT INSTALLATION

A. Comply with requirements in Section 220548 "Vibration and Seismic Controls for Plumbing Piping and Equipment" for seismic-restraint devices.

B. Comply with requirements in Section 220529 "Hangers and Supports for Plumbing Piping and Equipment" for pipe hanger and support devices.

C. Vertical Piping: MSS Type 8 or Type 42, clamps.

D. Individual, Straight, Horizontal Piping Runs:

1. 100 Feet and Less: MSS Type 1, adjustable, steel, clevis hangers.
2. Longer Than 100 Feet: MSS Type 43, adjustable, roller hangers.

E. Multiple, Straight, Horizontal Piping Runs 100 Feet or Longer: MSS Type 44, pipe rolls. Support pipe rolls on trapeze. Comply with requirements in Section 220529 "Hangers and Supports for Plumbing Piping and Equipment" for trapeze hangers.

F. Base of Vertical Piping: MSS Type 52, spring hangers.

G. Support horizontal piping within 12 inches of each fitting and coupling.

H. Rod diameter may be reduced one size for double-rod hangers, with 3/8-inch-minimum rods.

I. Install hangers for copper tubing with the following maximum horizontal spacing and minimum rod diameters:

1. NPS 1/4: 60 inches with 3/8-inch rod.

2. NPS 3/8 and NPS 1/2: 72 inches with 3/8-inch rod.
3. NPS 3/4: 84 inches with 3/8-inch rod.
4. NPS 1: 96 inches with 3/8-inch rod.
5. NPS 1-1/4: 108 inches with 3/8-inch rod.
6. NPS 1-1/2: 10 feet with 3/8-inch rod.
7. NPS 2: 11 feet with 3/8-inch rod.
8. NPS 2-1/2: 13 feet with 1/2-inch rod.
9. NPS 3: 14 feet with 1/2-inch rod.
10. NPS 3-1/2: 15 feet with 1/2-inch rod.
11. NPS 4: 16 feet with 1/2-inch rod.
12. NPS 5: 18 feet with 1/2-inch rod.
13. NPS 6: 20 feet with 5/8-inch rod.
14. NPS 8: 23 feet with 3/4-inch rod.

J. Install supports for vertical copper tubing every 10 feet.

3.6 IDENTIFICATION

A. Install identifying labels and devices for nonmedical laboratory compressed-air piping, valves, and specialties. Comply with requirements in Section 220553 "Identification for Plumbing Piping and Equipment."
   1. Instrument Air: White letters on red background.

3.7 FIELD QUALITY CONTROL FOR COMPRESSED-AIR PIPING IN NONMEDICAL LABORATORY FACILITIES

A. Testing Agency: Engage qualified testing agency to perform tests and inspections of compressed-air piping in nonmedical laboratory facilities and to prepare test and inspection reports.

B. Tests and Inspections:
   1. Piping Leak Tests for Compressed-Air Piping: Test new and modified parts of existing piping. Cap and fill compressed-air piping with oil-free dry nitrogen to pressure of 50 psig above system operating pressure, but not less than 150 psig. Isolate test source and let stand for four hours to equalize temperature. Refill system, if required, to test pressure; hold for two hours with no drop in pressure.
   2. Repair leaks and retest until no leaks exist.
   3. Inspect filters and pressure regulators for proper operation.

C. Remove and replace components that do not pass tests and inspections and retest as specified above.

3.8 PROTECTION

A. Protect tubing from damage.

B. Retain sealing plugs in tubing, fittings, and specialties until installation.

C. Clean tubing not properly sealed, and where sealing is damaged, according to "Preparation" Article.

3.9 PIPING SCHEDULE

A. Connect new tubing to existing tubing with memory-metal couplings.

B. Flanges may be used where connection to flanged equipment is required.

C. Instrument Air Piping Larger Than NPS 3 and Operating at More Than 185 psig: Type K, copper tube; wrought-copper fittings; and brazed joints.

D. Laboratory Air Piping except Laboratory Air Piping Larger Than NPS 3 and Operating at More Than 185 psig: Type L, copper medical gas tube; wrought-copper fittings; and brazed joints.

E. Laboratory Air Piping Larger Than NPS 3 and Operating at More Than 185 psig: Type K, copper medical gas tube; wrought-copper fittings; and brazed joints.

3.10 VALVE SCHEDULE

A. Shutoff Valves: Ball valve with manufacturer-installed ASTM B 819, copper-tube extensions.

B. Zone Valves: Ball valve with manufacturer-installed ASTM B 819, copper-tube extensions with pressure gage on one copper-tube extension.

END OF SECTION 226113

SECTION 226119 - COMPRESSED-AIR EQUIPMENT FOR LABORATORY AND HEALTHCARE FACILITIES

PART 1 GENERAL

1.1 SUMMARY

A. Section Includes:
   1. Rotary-screw air compressors.
   2. Refrigerant compressed-air dryers.
   3. Desiccant compressed-air dryers.

1.2 DEFINITIONS

A. Actual Air: Air delivered at air-compressor outlet. Flow rate is compressed air delivered and measured in acfm.
B. Laboratory Air Equipment: Compressed-air equipment and accessories for nonmedical laboratory facilities.
C. Medical air equipment includes instrument air compressors and accessories for healthcare facilities.
D. Standard Air: Free air at 68 deg F and 1 atmosphere before compression or expansion and measured in scfm.

1.3 ACTION SUBMITTALS

A. Product Data: For each type of product.
B. Shop Drawings: For air compressors and compressed-air dryer.
   1. Include plans, elevations, sections, and mounting details.
   2. Include details of equipment assemblies. Indicate dimensions, weights, loads, required clearances, method of field assembly, components, and location and size of each field connection.
   3. Vibration Isolation Base Details: Detail fabrication including anchorages and attachments to structure and to supported equipment. Include adjustable motor bases, rails, and frames for equipment mounting.
   4. Include diagrams for power, signal, and control wiring.

1.4 INFORMATIONAL SUBMITTALS

A. Qualification Data: For Installer.
B. Seismic Qualification Certificates: For air compressors, accessories, and components from manufacturer.
   1. Basis for Certification: Indicate whether withstand certification is based on actual test of assembled components or on calculations.
   2. Dimensioned Outline Drawings of Equipment Unit: Identify center of gravity and locate and describe mounting and anchorage provisions.
   3. Detailed description of equipment anchorage devices on which the certification is based and their installation requirements.
C. Field quality-control reports.

1.5 CLOSEOUT SUBMITTALS

A. Operation and Maintenance Data: For compressed-air equipment to include in operation and maintenance manuals.

1.6 QUALITY ASSURANCE

A. Installer Qualifications:
   1. Laboratory Air Equipment for Nonmedical Laboratory Facilities: An employer of workers trained and approved by manufacturer.

B. Testing Agency Qualifications: An independent testing agency, with the experience and capability to conduct the compressed-air equipment testing indicated, that is NRTL and that is acceptable to authorities having jurisdiction.
   1. Qualify testing personnel according to ASSE 6020 for inspectors and ASSE 6030 for verifiers.

PART 2 PRODUCTS

2.1 GENERAL REQUIREMENTS FOR AIR COMPRESSORS

A. Electrical Components, Devices, and Accessories: Listed and labeled as defined in NFPA 70, by a qualified testing agency, and marked for intended location and application.
B. Comply with NFPA 99, "Health Care Facilities," for compressed-air equipment and accessories for medical compressed-air systems.
C. Comply with UL 544, "Medical and Dental Equipment," for medical compressed-air equipment.
D. Description: Factory-assembled, -wired, -piped, and -tested; electric-motor-driven; air-cooled; continuous-duty air compressors and receivers that deliver air of quality equal to intake air.
E. Control Panels: Automatic control station with load control and protection functions. Comply with NEMA ICS 2 and UL 508.
   1. Enclosure: NEMA ICS 6, Type 12 control panel unless otherwise indicated.
   2. Motor Controllers: Full-voltage, combination-magnetic type with undervoltage release feature and motor-circuit-protector-type disconnecting means and short-circuit protective device.
   3. Control Voltage: 120-V ac or less, using integral control power transformer.
   4. Motor Overload Protection: Overload relay in each phase.
   5. Starting Devices: Hand-off-automatic selector switch in cover of control panel, plus pilot device for automatic control.
   6. Automatic control switches to sequence lead-lag air compressors for multiplex air compressors.
   7. Instrumentation: Include discharge-air and receiver pressure gages, air-filter maintenance indicator, hour meter, air-compressor discharge-air and coolant temperature gages, and control transformer.
   8. Alarm Signal Device: For connection to alarm system to indicate when backup air compressor is operating.
F. Receivers: Steel tank constructed according to ASME Boiler and Pressure Vessel Code: Section VIII, Division 1.
   1. Pressure Rating: At least as high as highest discharge pressure of connected air compressors and bearing appropriate code symbols.
   2. Interior Finish: Corrosion-resistant coating.
   3. Accessories: Include safety valve, pressure gage, automatic drain, and pressure regulator.
G. Mounting Frame: Fabricate base and attachment to air compressor and components with reinforcement strong enough to resist movement during a seismic event when base is anchored to building structure.

2.2 ROTARY-SCREW AIR COMPRESSORS

A. Rotary-Screw Air Compressors:
   1. Manufacturers: Subject to compliance with requirements, provide products by the following:
      a. Atlas Copco.
   2. Description: Packaged unit.
   3. Air Compressor(s): Single-stage, oil-free, rotary-screw type with nonlubricated helical screws and lubricated gearbox, and of construction that prohibits oil from entering compression chamber.
      a. Cooling/Lubrication System: Unit-mounted, air-cooled exchanger package prepiped to unit; with air-pressure circulation system with coolant stop valve, full-flow coolant filter, and thermal-bypass valve.
      b. Air Filter: Dry type, with maintenance indicator and cleanable replaceable filter element.
      c. Air/Coolant Receiver and Separation System: 150-psig-rated steel tank with ASME safety valve, coolant-level gage, multistage air-coolant separator element, minimum pressure

valve, blowdown valve, discharge check valve, coolant stop valve, full-flow coolant filter, and thermal-bypass valve.

d. Capacity Control: Capacity modulation between zero and 100 percent air delivery, with operating pressures between 50 and 100 psig. Include necessary control to hold constant pressure. When air demand is zero, unload compressor by using pressure switch and blowdown valve.

e. Mounting: Freestanding.

B. Capacities and Characteristics:

1. Compressed-Air Service: Instrument air.
2. Air Compressor(s): Two.
3. Actual-Air Capacity of Each Air Compressor: 195.6 ACFM delivered.
4. Discharge-Air Pressure: 125 psig.
5. Motor (Each Air Compressor):
   a. Horsepower: 50.
6. Electrical Characteristics:
   a. Volts: 460.
   b. Phase(s): Three.
   c. Hertz: 60.
7. Receiver: ASME construction steel tank.
   a. Orientation: Vertical arrangement.
   b. Capacity: 540 gal. .
   c. Pressure Rating: 150 psig minimum.
   d. Pressure Regulator Setting: 100 psig.
   e. Drain: Manual valve.

2.3 COMPRESSED-AIR DRYERS

A. Desiccant Compressed-Air Dryers:

1. Manufacturers: Subject to compliance with requirements, provide products by the following:
   a. Atlas Copco.
2. Description: Twin-tower unit with purge system, mufflers, and capability to deliver -40F, 100-psig air at dew point. Include dew point controlled purge, step-down transformers, disconnect switches, inlet and outlet pressure gages, thermometers, automatic controls, and filters.

2.4 COMPRESSED-AIR FILTER ASSEMBLIES

A. Compressed-Air Filter Assemblies:

1. Description: Filter assemblies suitable for compressed air, in parallel duplex arrangement. Size each assembly for maximum capacity of connected equipment and operating pressure of compressed-air system. Include automatic ejection of condensate from airstream, inlet and outlet pressure gages, and shutoff valves.
   a. Option: Factory-fabricated filter system consisting of three air filters equivalent to those specified, pipe, fittings, valves, differential pressure switch, and enclosure; and with additional automatic drain traps and gages.
2. Size filter assemblies for 5-psig maximum air-pressure drop when filters are new and clean, at system rated capacity, and at 100-psig pressure.
3. Differential Pressure Switch: Adjustable, diaphragm type, with electrical connections for alarm system, to indicate when air-pressure drop through filters rises to more than 2 psig greater than when new and clean.
4. Particulate Filters: Collection efficiency of 98 percent retention of particles 1 micrometer and larger.
5. Odor and Taste Filters: Vapor-absorbing, activated charcoal.
6. Coalescing Filters: Collection efficiency of 99.9 percent retention of particles 0.3 micrometer and smaller.
7. Include automatic drain trap for each filter.

PART 3 EXECUTION

3.1 PREPARATION

A. Clean compressed-air equipment, accessories, and components that have not been cleaned for oxygen service and sealed or that are furnished unsuitable for laboratory air applications, according to CGA G-4.1, "Cleaning Equipment for Oxygen Service."

3.2 COMPRESSED-AIR EQUIPMENT INSTALLATION

A. General Requirements for Compressed-Air Equipment Installation:
   1. Install compressed-air equipment to allow maximum headroom unless specific mounting heights are indicated.
   2. Install equipment level and plumb, parallel and perpendicular to other building systems and components in exposed interior spaces unless otherwise indicated.
   3. Install mechanical equipment to facilitate service, maintenance, and repair or replacement of components. Connect equipment for ease of disconnecting, with minimum interference to other installations. Extend grease fittings to accessible locations.
   4. Install equipment to allow right of way for piping installed at required slope.
   5. Install the following devices on compressed-air equipment:
      a. Thermometer, Pressure Gage, and Safety Valve: Install on each compressed-air receiver.
      b. Pressure Regulators: Install downstream from air compressors, dryers, purification units, and filter assemblies.
      c. Drain Valves: Install on aftercoolers, receivers, and dryers. Discharge condensate over nearest floor drain.
B. Nonmedical Laboratory Compressed-Air Equipment Installation:
   1. Comply with requirements for vibration isolation and seismic control devices specified in Section 220548 "Vibration and Seismic Controls for Plumbing Piping and Equipment"
   2. Comply with requirements for vibration isolation devices specified in Section 220548.13 "Vibration Controls for Plumbing Piping and Equipment."
   3. Maintain manufacturer's recommended clearances for service and maintenance.
   4. Install control panels for dental compressed-air equipment on wall near equipment.

3.3 CONNECTIONS

A. Comply with requirements for water-supply piping specified in Section 221116 "Domestic Water Piping." Drawings indicate general arrangement of piping, fittings, and specialties.
B. Comply with requirements for drain piping specified in Section 221316 "Sanitary Waste and Vent Piping." Drawings indicate general arrangement of piping, fittings, and specialties.
C. Comply with requirements for compressed-air piping specified in Section 226113 "Compressed-Air Piping for Laboratory and Healthcare Facilities." Drawings indicate general arrangement of piping, fittings, and specialties.
D. Where installing piping adjacent to equipment, allow space for service and maintenance.
E. Connect compressed-air piping to compressed-air equipment, accessories, and specialties with shutoff valve and union or flanged connection.
F. Connect water supply to compressed-air equipment that requires water. Include backflow preventer. Backflow preventers are specified in Section 221119 "Domestic Water Piping Specialties."

3.4 IDENTIFICATION

A. Identify nonmedical laboratory compressed-air equipment system components. Comply with requirements for identification specified in Section 220553 "Identification for Plumbing Piping and Equipment."
B. Identify medical compressed-air equipment system components. Comply with requirements for identification specified in Section 220553 "Identification for Plumbing Piping and Equipment." and with NFPA 99.

3.5 FIELD QUALITY CONTROL FOR HEALTHCARE-FACILITY MEDICAL COMPRESSED-AIR EQUIPMENT

A. Manufacturer's Field Service: Engage a factory-authorized service representative to test and inspect components, assemblies, and equipment installations, including connections.

B. Perform the following tests and inspections.

1. Preparation: Perform medical compressed-air equipment tests according to requirements in NFPA 99 for the following:
   a. Air-quality purity test.
   b. System operation test.
2. Equipment Verification: Comply with requirements in ASSE 6020, ASSE 6030, and NFPA 99 for verification of medical compressed-air equipment.
3. Replace damaged and malfunctioning controls and equipment.
4. Testing Certification: Certify that specified tests, inspections, and procedures have been performed and certify report results. Include the following:
   a. Inspections performed.
   b. Procedures, materials, and gases used.
   c. Test methods used.
   d. Results of tests.

C. Components will be considered defective if they do not pass tests and inspections.

D. Prepare test and inspection reports.

3.6 STARTUP SERVICE

A. Engage a factory-authorized service representative to perform startup service.

1. Complete installation and startup checks according to manufacturer's written instructions.
2. Check for lubricating oil in lubricated-type equipment.
3. Check belt drives for proper tension.
4. Verify that air-compressor inlet filters and piping are clear.
5. Check for equipment vibration-control supports and flexible pipe connectors and verify that equipment is properly attached to substrate.
6. Check safety valves for correct settings. Ensure that settings are higher than air-compressor discharge pressure, but not higher than rating of system components.
7. Drain receiver tank(s).
8. Operational Test: After electrical circuitry has been energized, start units to confirm proper motor rotation and unit operation.
9. Test and adjust controls and safeties.

B. Prepare written report documenting testing procedures and results.

END OF SECTION 226119

SECTION 230500 - COMMON WORK RESULTS FOR HVAC

PART 1 GENERAL

1.1 SUMMARY

A. Section Includes:
1. Motors.
2. Packed expansion joints.
3. Packless expansion joints.
4. Grooved-joint expansion joints.
5. Alignment guides and anchors.
6. Sleeves without waterstop.
7. Sleeves with waterstop.
8. Stack-sleeve fittings.
9. Sleeve-seal systems.
10. Grout.
11. Silicone sealants.
12. Escutcheons.
13. Thermometers, bimetallic actuated.
14. Thermometers, filled system.
15. Thermometers, liquid in glass.
16. Thermometers, light activated.
17. Duct-thermometer mounting brackets.
18. Thermowells.
19. Pressure gauges, dial type.
20. Gauge attachments.
21. Test plugs.
22. Test-plug kits.
23. Sight flow indicators.
24. Flowmeters.
25. Thermal-energy meters.

B. Related Requirements:
1. Section 231123 "Facility Natural-Gas Piping" for gas meters.
2. Section 232216 "Steam and Condensate Piping Specialties" for steam and condensate meters.
3. Section 230923.13 "Energy Meters" for thermal-energy meters connecting with the DDC system.
4. Section 230923.14 "Flow Instruments" for primary flow instruments connecting with the DDC system.

1.2 DEFINITIONS

A. Existing Piping To Remain: Existing piping that is not to be removed and that is not otherwise indicated to be removed, removed and salvaged, or removed and reinstalled.

1.3 ACTION SUBMITTALS

A. Product Data:
1. For each type of product, excluding motors which are included in Part 1 of HVAC equipment Sections.
a. Include construction details, material descriptions, and dimensions of individual components, and finishes.
b. Include operating characteristics and furnished accessories.

B. Delegated Design Submittals: For each anchor and alignment guide, including analysis data, signed and sealed by the qualified professional engineer responsible for their preparation.

1. Design Calculations: Calculate requirements for thermal expansion of piping systems and for selecting and designing expansion joints, loops, and swing connections.
2. Anchor Details: Detail fabrication of each anchor indicated. Show dimensions and methods of assembly and attachment to building structure.
3. Alignment Guide Details: Detail field assembly and attachment to building structure.
4. Schedule: Indicate type, manufacturer's number, size, material, pressure rating, end connections, and location for each expansion joint.

1.4 INFORMATIONAL SUBMITTALS

A. Product Certificates: For each type of meter.
B. Welding certificates.
C. Field quality-control reports.

1.5 CLOSEOUT SUBMITTALS

A. Operation and Maintenance Data: For each type of expansion joint, to include in operation and maintenance manuals.

1.6 QUALITY ASSURANCE

A. Welding Qualifications: Qualify procedures and personnel in accordance with AWS D1.1/D1.1M.
B. Pipe and Pressure-Vessel Welding Qualifications: Qualify procedures and operators in accordance with 2021 ASME Boiler and Pressure Vessel Code, Section IX.

1.7 COORDINATION

A. Coordinate features of motors, installed units, and accessory devices to be compatible with the following:
1. Motor controllers.
2. Torque, speed, and horsepower requirements of the load.
3. Ratings and characteristics of supply circuit and required control sequence.
4. Ambient and environmental conditions of installation location.

PART 2 PRODUCTS

2.1 MOTORS

A. Motor Requirements, General:
1. Content includes motors for use on alternating-current power systems of up to 600 V and installed at equipment manufacturer's factory or shipped separately by equipment manufacturer for field installation.
2. Comply with requirements in this Section except when stricter requirements are specified in equipment schedules or Sections.
3. Comply with NEMA MG 1 unless otherwise indicated.
4. Comply with IEEE 841 for severe-duty motors.
B. Motor Characteristics:
1. Duty: Continuous duty at ambient temperature of 40 deg C and at altitude of 3300 ft. above sea level.
2. Capacity and Torque Characteristics: Sufficient to start, accelerate, and operate connected loads at designated speeds, at installed altitude and environment, with indicated operating sequence, and without exceeding nameplate ratings or considering service factor.
C. Polyphase Motors:
1. Description: NEMA MG 1, Design B, medium induction motor.
2. Efficiency: Premium Efficient, as defined in NEMA MG 1.
3. Service Factor: 1.15.
4. Multispeed Motors: Variable torque.

a. For motors with 2:1 speed ratio, consequent pole, single winding.
b. For motors with other than 2:1 speed ratio, separate winding for each speed.

5. Multispeed Motors, Two Winding: Separate winding for each speed.
6. Rotor: Random-wound, squirrel cage.
7. Bearings: Regreasable, shielded, antifriction ball bearings suitable for radial and thrust loading.
8. Temperature Rise: Match insulation rating.
9. Insulation: ???Insert class???.
10. Code Letter Designation:
    a. Motors 15 Hp and Larger: NEMA starting Code F or Code G.
    b. Motors Smaller Than 15 Hp: Manufacturer's standard starting characteristic.
11. Enclosure Material: Cast iron for motor frame sizes 324T and larger; rolled steel for motor frame sizes smaller than 324T.

D. Additional Requirements for Polyphase Motors:
1. Motors Used with Reduced-Voltage and Multispeed Controllers: Match wiring connection requirements for controller with required motor leads. Provide terminals in motor terminal box, suited to control method.
2. Motors Used with Variable-Frequency Controllers: Ratings, characteristics, and features coordinated with and approved by controller manufacturer.
    a. Windings: Copper magnet wire with moisture-resistant insulation varnish, designed and tested to resist transient spikes, high frequencies, and short time-rise pulses produced by pulse-width-modulated inverters.
    b. Premium-Efficient Motors: Class B temperature rise; Class F insulation.
    c. Inverter-Duty Motors: Class F temperature rise; Class H insulation.
    d. Thermal Protection: Comply with NEMA MG 1 requirements for thermally protected motors.
3. Severe-Duty Motors: Comply with IEEE 841, with 1.15 minimum service factor.

E. Single-Phase Motors:
1. Motors larger than 1/20 hp must be one of the following, to suit starting torque and requirements of specific motor application:
    a. Permanent-split capacitor.
    b. Split phase.
    c. Capacitor start, inductor run.
    d. Capacitor start, capacitor run.
2. Multispeed Motors: Variable-torque, permanent-split-capacitor type.
3. Bearings: Prelubricated, antifriction ball bearings or sleeve bearings suitable for radial and thrust loading.
4. Motors 1/20 hp and Smaller: Shaded-pole type.
5. Thermal Protection: Internal protection to automatically open power supply circuit to motor when winding temperature exceeds a safe value calibrated to temperature rating of motor insulation. Thermal-protection device will automatically reset when motor temperature returns to normal range.

F. Electronically Commutated Motors:
1. Microprocessor-Based Electronic Control Module: Converts 120 V single-phase AC power to three-phase DC power to operate the brushless DC motor.
2. Three-phase power motor module with permanent magnet rotor.
3. digital speed controller/LED display.
4. Building Automation System Interface: Via DC voltage signal.

2.2 EXPANSION FITTINGS AND LOOPS FOR HVAC PIPING

A. Performance Requirements:
1. Compatibility: Provide products suitable for piping service fluids, materials, working pressures, and temperatures.
2. Capability: Provide products and installations that will accommodate maximum axial movement as scheduled or indicated on Drawings.

B. Packed Expansion Joints:
1. Flexible, Ball-Joint Packed Expansion Joints: FBJ-01.

a. Source Limitations: Obtain rubber union connector expansion joints from single manufacturer.
b. Standards: 2021 ASME Boiler and Pressure Vessel Code: Section II, "Materials"; ASME B31.9 for materials and design of pressure-containing parts and bolting.
c. Material: Carbon-steel assembly with asbestos-free composition packing.
d. Design: Provide 360-degree rotation and angular deflection.
e. Minimum Pressure Rating: 250 psig at 400 deg F
f. Angular Deflection for NPS 6 (DN 150) and Smaller: 30 degrees minimum.
g. Angular Deflection for NPS 8 (DN 200) and Larger: 15 degrees minimum.
h. Seal Type: Two carbon-steel and graphite seals suitable for continuous operation at temperature up to 650 deg F.
i. Internal Ball: Plated with minimum 1-mil chrome cover.
j. Ball Socket: One- or two-piece design with integral socket/retainer.
1) Stuffing Box: Incorporates containment seals and compression seals for containment of injectable packing.
2) Packing Cylinders: Provides packing under full line pressure with check valves to prevent blowback.
k. End Connections for NPS 2 (DN 50) and Smaller: Threaded.
l. End Connections for NPS 2-1/2 (DN 65) and Larger: Flanged.

2. Slip-Joint Packed Expansion Joints: SJ-01.
a. Source Limitations: Obtain slip-joint packed expansion joints from single manufacturer.
b. Standard: ASTM F1007.
c. Material: Carbon steel with asbestos-free PTFE packing.
d. Design: With internal guide and injection ports for repacking under full system pressure. Housing is to be furnished with drain ports and lifting ring. Include drip connection if used for steam piping.
e. Configuration: Single joint class(es) unless otherwise indicated.
f. Slip Tube for Sizes NPS 1-1/2 (DN 40) through NPS 16 (DN 400): Schedule 80.
g. Slip Tube for Sizes NPS 18 (DN 450) through NPS 24 (DN 600): Schedule 60.
h. Sliding Surface: 2-mil-thick chrome finish.
i. End Connections: Flanged or welded ends to match piping system.

C. Packless Expansion Joints:
1. Metal, Compensator Packless Expansion Joints: MCEJ-01.
a. Source Limitations: Obtain metal compensator packless expansion joints from single manufacturer.
b. Minimum Pressure Rating: 150 psig unless otherwise indicated.
c. Description: Totally enclosed, externally pressurized, multi-ply bellows isolated from fluid flow by an internal pipe sleeve and external housing.
d. Joint Axial Movement: 2 inches of compression and 1/2 inch of extension.
e. Configuration for Copper Tubing: Multi-ply, phosphor-bronze bellows with copper pipe ends.
1) End Connections for Copper Tubing NPS 2 (DN 50) and Smaller: Solder joint.
2) End Connections for Copper Tubing NPS 2-1/2 to NPS 4 (DN 65 to DN 100): Threaded.
f. Configuration for Steel Piping: Multi-ply, stainless steel bellows; steel-pipe end connections; and carbon-steel shroud.
1) End Connections for Steel Pipe NPS 2 (DN 50) and Smaller: Threaded.
2) End Connections for Steel Pipe NPS 2-1/2 to NPS 4 (DN 65 to DN 100): Flanged.

2. Rubber Union Connector Expansion Joints: RUEJ-01.
a. Source Limitations: Obtain rubber union connector expansion joints from single manufacturer.
b. Material: Twin reinforced-rubber spheres with external restraining cables.
c. Minimum Pressure Rating: 150 psig at 170 deg F ???Insert value??? unless otherwise indicated.
d. End Connections for NPS 2 (DN 50) and Smaller: Threaded.
e. End Connections for Greater than NPS 2 (DN 50): Flanged.

3. Flexible-Hose Packless Expansion Joints: FHEJ-01.
   a. Source Limitations: Obtain flexible-hose packless expansion joints from single manufacturer.
   b. Description: Manufactured assembly with inlet and outlet elbow fittings and two flexible-metal-hose legs joined by long-radius, 180-degree return bend or center section of flexible hose.
   c. Flexible Hose: Corrugated-metal inner hoses and braided outer sheaths.
   d. Expansion Joints for Copper Tubing NPS 2 (DN 50) and Smaller: Copper-alloy fittings with ???Insert type??? end connections.
      1) Bronze hoses and single-braid bronze sheaths with 450 psig at 70 deg F and 340 psig at 450 deg F ratings.
      2) Bronze hoses and double-braid bronze sheaths with 700 psig at 70 deg F and 500 psig at 450 deg F ratings.
   e. Expansion Joints for Copper Tubing NPS 2-1/2 to NPS 4 (DN 65 to DN 100): Copper-alloy fittings with threaded end connections.
      1) Stainless steel hoses and single-braid, stainless steel sheaths with 300 psig at 70 deg F and 225 psig at 450 deg F ratings.
      2) Stainless steel hoses and double-braid, stainless steel sheaths with 420 psig at 70 deg F and 315 psig at 450 deg F ratings.
   f. Expansion Joints for Steel Piping NPS 2 (DN 50) and Smaller: Carbon-steel fittings with threaded end connections.
      1) Stainless steel hoses and single-braid, stainless steel sheaths with 450 psig at 70 deg F and 325 psig at 600 deg F ratings.
      2) Stainless steel hoses and double-braid, stainless steel sheaths with 700 psig at 70 deg F and 515 psig at 600 deg F ratings.
   g. Expansion Joints for Steel Piping NPS 2-1/2 to NPS 6 (DN 65 to DN 150): Carbon-steel fittings with flanged end connections.
      1) Stainless steel hoses and single-braid, stainless steel sheaths with 200 psig at 70 deg F and 145 psig at 600 deg F ratings.
      2) Stainless steel hoses and double-braid, stainless steel sheaths with 275 psig at 70 deg F and 200 psig at 600 deg F ratings.
   h. Expansion Joints for Steel Piping NPS 8 to NPS 12 (DN 200 to DN 300): Carbon steel fittings with flanged end connections.
      1) Stainless steel hoses and single-braid, stainless steel sheaths with 125 psig at 70 deg F and 90 psig at 600 deg F ratings.
      2) Stainless steel hoses and double-braid, stainless steel sheaths with 165 psig at 70 deg F and 120 psig at 600 deg F ratings.
   i. Expansion Joints for Steel Piping NPS 14 (DN 350) and Larger: Carbon-steel fittings with flanged end connections.
      1) Stainless steel hoses and double-braid, stainless steel sheaths with 165 psig at 70 deg F and 120 psig at 600 deg F ratings.
4. Metal-Bellows Packless Expansion Joints: MBEJ-01.
   a. Source Limitations: Obtain metal-bellows packless expansion joints from single manufacturer.
   b. Standards: ASTM F1120 and EJMA's "Standards of the Expansion Joint Manufacturers Association, Inc."
   c. Type: Circular, corrugated bellows with external tie rods.
   d. Minimum Pressure Rating: 150 psig unless otherwise indicated.
   e. Configuration: Single joint class(es), unless otherwise indicated.
   f. Expansion Joints for Copper Tubing: Single phosphor-bronze bellows, copper pipe ends, and brass shrouds.
      1) End Connections for Copper Tubing NPS 2 (DN 50) and Smaller: Solder joint.
      2) End Connections for Copper Tubing NPS 2-1/2 to NPS 4 (DN 65 to DN 100): Solder joint.
      3) End Connections for Copper Tubing NPS 5 (DN 125) and Larger: Flanged.
   g. Expansion Joints for Steel Piping: Single stainless steel bellows, steel pipe ends, and carbon steel shroud.
      1) End Connections for Steel Pipe NPS 2 (DN 50) and Smaller: Threaded.

2) End Connections for Steel Pipe NPS 2-1/2 (DN 65) and Larger: Flanged.

5. Externally Pressurized Metal-Bellows Packless Expansion Joints: EPEJ-01.
   a. Source Limitations: Obtain externally pressurized metal-bellows packless expansion joints from single manufacturer.
   b. Minimum Pressure Rating: 150 psig unless otherwise indicated.
   c. Description:
      1) Totally enclosed, externally pressurized, multi-ply, stainless steel bellows isolated from fluid flow by an internal pipe sleeve.
      2) Carbon-steel housing.
      3) Drain plugs and lifting lug for NPS 3 and larger.
      4) Bellows: With operating clearance between internal pipe sleeves and external shrouds.
      5) Joints: Supplied with a built-in scale to confirm the starting position and operating movement.
      6) Joint Axial Movement: 4 inches of compression and 3/4 inch of extension.
   d. Permanent Locking Bolts: Set locking bolts to maintain joint lengths during installation. Temporary welding tabs that are removed after installation in lieu of locking bolts are unacceptable.
   e. End Connection Configuration: Flanged; one raised, fixed and one floating flange.
6. Rubber Packless Expansion Joints: REJ-01.
   a. Source Limitations: Obtain rubber packless expansion joints from single manufacturer.
   b. Standards: ASTM F1123 and FSA's "Expansion Joints - Piping Technical Handbook."
   c. Material: Fabric-reinforced rubber complying with FSA-PSJ-703.
   d. Arch Type: Single arches.
   e. Spherical Type: Single.
   f. Minimum Pressure Rating for NPS 1-1/2 to NPS 12 (DN 40 to DN 300): 225 psig at 170 deg F.
   g. Material for Fluids Containing Acids, Alkalis, or Chemicals: Butyl rubber
   h. Material for Fluids Containing Gas, Hydrocarbons, or Oil: Buna-N .
   i. Material for Water: Butyl rubber.
   j. End Connections: Full-faced, integral steel flanges with steel retaining rings.

D. Grooved-Joint Expansion Joints:
   1. Source Limitations: Obtain grooved-joint expansion joints from single manufacturer.
   2. Description: Factory-assembled expansion joint made of several grooved-end pipe nipples, couplings, and grooved joints.
   3. Standard: AWWA C606, for grooved joints.
   4. Materials: Galvanized, ASTM A53/A53M, Schedule 40, Type E or S, steel pipe with grooved ends.
   5. Couplings: Five, flexible type for steel-pipe dimensions. Include ferrous housing sections , Buna-N gasket and bolts and nuts.

E. Alignment Guides and Anchors:
   1. Alignment Guides: AG-01.
      a. Source Limitations: Obtain alignment guides from single manufacturer.
      b. Description: Steel, factory-fabricated alignment guide, with bolted two-section outer cylinder and base for attaching to structure; with two-section guiding slider for bolting to pipe. Provide dielectric spacer for use with copper tubing/piping.
   2. Anchor Materials:
      a. Steel Shapes and Plates: ASTM A36/A36M.
      b. Bolts and Nuts: ASME B18.10 or ASTM A183, steel hex head.
      c. Washers: ASTM F844, steel, plain, flat washers.
      d. Mechanical Fasteners: Insert-wedge-type stud with expansion plug anchor for use in hardened portland cement concrete, with tension and shear capacities appropriate for application.
         1) Stud: Threaded, zinc-coated carbon steel.
         2) Expansion Plug: Zinc-coated carbon steel.
         3) Washer and Nut: Zinc-coated carbon steel.

e. Chemical Fasteners: Insert-type stud, bonding-system anchor for use with hardened portland cement concrete, with tension and shear capacities appropriate for application.
   1) Bonding Material: ASTM C881/C881M, Type IV, Grade 3, two-component epoxy resin suitable for surface temperature of hardened concrete where fastener is to be installed.
   2) Stud: ASTM A307, zinc-coated carbon steel with continuous thread on stud, unless otherwise indicated.
   3) Washer and Nut: Zinc-coated carbon steel.

2.3 SLEEVES AND SLEEVE SEALS

A. Sleeves without Waterstop:
   1. Cast-Iron Pipe Sleeves: Cast or fabricated of cast or ductile iron, with plain ends.
   2. Steel Pipe Sleeves: ASTM A53/A53M, Type E, Grade B, Schedule 40, hot-dip galvanized, with plain ends.
   3. Steel Sheet Sleeves: ASTM A653/A653M, 24 gauge minimum thickness; hot-dip galvanized, round tube closed with welded longitudinal joint.
   4. PVC Pipe Sleeves: ASTM D1785, Schedule 40.
   5. Molded-PVC Sleeves: With nailing flange.
   6. Molded-PE or -PP Sleeves: Removable, tapered-cup shaped, and smooth outer surface with nailing flange.

B. Sleeves with Waterstop:
   1. Description: Manufactured PVC/HDPE , sleeve-type, waterstop assembly, made for imbedding in concrete slab or wall.

C. Stack-Sleeve Fittings:
   1. Description: Manufactured, Dura-coated or Duco-coated cast-iron sleeve with integral cast flashing flange for use in waterproof floors and roofs. Include clamping ring, bolts, and nuts for membrane flashing.
      a. Underdeck Clamp: Clamping ring with setscrews.

D. Sleeve-Seal Systems:
   1. Description: Modular sealing-element unit, designed for field assembly, for filling annular space between piping and sleeve.
      a. Hydrostatic seal: 20 psig.
      b. Sealing Elements: EPDM-rubberinterlocking links shaped to fit surface of pipe. Include type and number required for pipe material and size.
      c. Pressure Plates: Carbon steel.
      d. Connecting Bolts and Nuts: Carbon steel, with zinc coating. ASTM B633 of length required to secure pressure plates to sealing elements.

E. Grout:
   1. Description: Nonshrink, for interior and exterior sealing openings in non-fire-rated walls or floors.
   2. Standard: ASTM C1107/C1107M, Grade B, post-hardening and volume-adjusting, dry, hydraulic-cement grout.
   3. Design Mix: 5000 psi, 28-day compressive strength.
   4. Packaging: Premixed and factory packaged.

F. Silicone Sealants:
   1. Silicone Sealant, S, NS, 25, NT: Single-component, nonsag, plus 25 percent and minus 25 percent movement capability, nontraffic-use, neutral-curing silicone joint sealant.
      a. Standard: ASTM C920, Type S, Grade NS, Class 25, Use NT.
   2. Silicone Sealant, S, P, T, NT: Single-component, 25], pourable, plus 25 percent and minus 25 percent movement capability, traffic- and nontraffic-use, neutral-curing silicone joint sealant.
      a. Standard: ASTM C920, Type S, Grade P, Class 25, Uses T and NT.
   3. Silicone Foam Sealant: Multicomponent, silicone-based liquid elastomers that, when mixed, expand and cure in place to produce a flexible, nonshrinking foam.

2.4 ESCUTCHEONS

A. Escutcheon Types:

1. One-Piece, Steel Type: With polished, chrome-plated finish and setscrew fastener.
2. One-Piece, Stainless Steel Type: With polished stainless steel finish.
3. One-Piece, Cast-Brass Type: With polished, chrome-plated finish and setscrew fastener.
4. One-Piece, Deep-Pattern Type: Deep-drawn, box-shaped steel with polished, chrome-plated finish and spring-clip fasteners.
5. One-Piece, Stamped-Steel Type: With polished, chrome-plated finish and spring-clip fasteners.
6. Split-Plate, Stamped-Steel Type: With polished, chrome-plated finish; concealed hinge; and spring-clip fasteners.

B. Floor Plates:
1. Split Floor Plates: Steel with concealed hinge.

2.5 METERS AND GAUGES FOR HVAC PIPING

A. Thermometers, Bimetallic Actuated:
1. Source Limitations: Provide bimetallic-actuated thermometers from a single manufacturer.
2. Standard: ASME B40.200.
3. Case: Liquid-filled type(s); stainless steel with 3-inch nominal diameter.
4. Dial: Nonreflective aluminum with permanently etched scale markings and scales in deg F
5. Connector Type(s): Union joint, adjustable angle, with unified-inch screw threads.
6. Connector Size: 1/2 inch, with ASME B1.1 screw threads.
7. Stem: 0.25 or 0.375 inch in diameter; stainless steel.
8. Window: Plain glass.
9. Ring: Stainless steel.
10. Element: Bimetal coil.
11. Pointer: Dark-colored metal.
12. Accuracy: Plus or minus 1 percent of scale range.

B. Thermometers, Filled System - Direct-Mounted, Metal-Case, Vapor-Actuated:
1. Source Limitations: Provide filled-system, direct-mounted, metal-case, vapor-actuated thermometers from a single manufacturer.
2. Standard: ASME B40.200.
3. Case: Sealed type, cast aluminum or drawn steel 4-1/2-inchnominal diameter.
4. Element: Bourdon tube or other type of pressure element.
5. Movement: Mechanical, with link to pressure element and connection to pointer.
6. Dial: Nonreflective aluminum with permanently etched scale markings graduated in deg F.
7. Pointer: Dark-colored metal.
8. Window: Glass.
9. Ring: Metal.
10. Connector Type(s): Union joint, adjustable, 180 degrees in vertical plane, 360 degrees in horizontal plane, with locking device]; with ASME B1.1 screw threads.
11. Thermal System: Liquid-filled bulb in copper-plated steel, aluminum, or brass stem and of length to suit installation.
    a. Design for Air-Duct Installation: With ventilated shroud.
    b. Design for Thermowell Installation: Bare stem.
12. Accuracy: Plus or minus 1 percent of scale range.

C. Thermometers, Filled System - Direct-Mounted, Plastic-Case, Vapor-Actuated:
1. Source Limitations: Provide filled-system, direct-mounted, plastic-case, vapor-actuated thermometers from single manufacturer.
2. Standard: ASME B40.200.
3. Case: Sealed type, plastic 4-1/2-inch nominal diameter.
4. Element: Bourdon tube or other type of pressure element.
5. Movement: Mechanical, with link to pressure element and connection to pointer.
6. Dial: Nonreflective aluminum with permanently etched scale markings graduated in deg F.
7. Pointer: Dark-colored metal.
8. Window: Glass.

9. Ring: Metal
10. Connector Type(s): Union joint, adjustable, 180 degrees in vertical plane, 360 degrees in horizontal plane, with locking device; with ASME B1.1 screw threads.
11. Thermal System: Liquid-filled bulb in copper-plated steel, aluminum, or brass stem and of length to suit installation.
    a. Design for Air-Duct Installation: With ventilated shroud.
    b. Design for Thermowell Installation: Bare stem.
12. Accuracy: Plus or minus 1 percent of scale range.

D. Thermometers, Filled-System - Remote-Mounted, Metal-Case, Vapor-Actuated:
1. Source Limitations: Provide filled-system, remote-mounted, metal-case, vapor-actuated thermometers from a single manufacturer.
2. Standard: ASME B40.200.
3. Case: Sealed type, cast aluminum or drawn steel4-1/2-inch nominal diameter with back flange and holes for panel mounting.
4. Element: Bourdon tube or other type of pressure element.
5. Movement: Mechanical, with link to pressure element and connection to pointer.
6. Dial: Nonreflective aluminum with permanently etched scale markings graduated in deg F.
7. Pointer: Dark-colored metal.
8. Window: Glass.
9. Ring: Metal.
10. Connector Type(s): Union joint, back; with ASME B1.1 screw threads.
11. Thermal System: Liquid-filled bulb in copper-plated steel, aluminum, or brass stem and of length to suit installation.
    a. Design for Air-Duct Installation: With ventilated shroud.
    b. Design for Thermowell Installation: Bare stem.
12. Accuracy: Plus or minus 1 percent of scale range.

E. Thermometers, Filled System - Remote-Mounted, Plastic-Case, Vapor-Actuated:
1. Source Limitations: Provide filled-system, remote-mounted, plastic-case, vapor-actuated thermometers from a single manufacturer.
2. Standard: ASME B40.200.
3. Case: Sealed type, plastic; 4-1/2-inchnominal diameter with back flange and holes for panel mounting.
4. Element: Bourdon tube or other type of pressure element.
5. Movement: Mechanical, with link to pressure element and connection to pointer.
6. Dial: Nonreflective aluminum with permanently etched scale markings graduated in deg F.
7. Pointer: Dark-colored metal.
8. Window: Glass.
9. Ring: Metal.
10. Connector Type(s): Union joint, threaded, back; with ASME B1.1 screw threads.
11. Thermal System: Liquid-filled bulb in copper-plated steel, aluminum, or brass stem and of length to suit installation.
    a. Design for Air-Duct Installation: With ventilated shroud.
    b. Design for Thermowell Installation: Bare stem.
12. Accuracy: Plus or minus 1 percent of scale range or one scale division, to a maximum of 1.5 percent of scale range.

F. Thermometers, Liquid-in-Glass - Metal Case, Compact Style:
1. Source Limitations: Provide liquid-in-glass, metal-case, compact-style thermometers by single manufacturer.
2. Standard: ASME B40.200.
3. Case: Cast aluminum; 6-inch nominal size.
4. Case Form: Back angle unless otherwise indicated.
5. Tube: Glass with magnifying lens and blue or red organic liquid.
6. Tube Background: Nonreflective aluminum with permanently etched scale markings graduated in deg F.

7. Window: Glass or plastic.
8. Stem: Aluminum or brass and of length to suit installation.
    a. Design for Air-Duct Installation: With ventilated shroud.
    b. Design for Thermowell Installation: Bare stem.
9. Connector: 3/4 inch, with ASME B1.1 screw threads.
10. Accuracy: Plus or minus 1 percent of scale range or one scale division, to a maximum of 1.5 percent of scale range.

G. Thermometers, Liquid in Glass - Plastic Case, Compact Style:
1. Source Limitations: Provide liquid-in-glass, plastic-case, compact-style thermometers from single manufacturer.
2. Standard: ASME B40.200.
3. Case: Plastic; 6-inch nominal size.
4. Case Form: Back angle unless otherwise indicated.
5. Tube: Glass with magnifying lens and blue or red organic liquid.
6. Tube Background: Nonreflective with permanently etched scale markings graduated in deg F.
7. Window: Glass or plastic.
8. Stem: Aluminum or brass and of length to suit installation.
    a. Design for Air-Duct Installation: With ventilated shroud.
    b. Design for Thermowell Installation: Bare stem.
9. Connector: 3/4 inch, with ASME B1.1 screw threads.
10. Accuracy: Plus or minus 1 percent of scale range or one scale division, to a maximum of 1.5 percent of scale range.

H. Thermometers, Liquid in Glass - Metal Case, Industrial Style:
1. Source Limitations: Provide liquid-in-glass, metal-case, industrial-style thermometers from single manufacturer.
2. Standard: ASME B40.200.
3. Case: Cast aluminum; 7-inchnominal size unless otherwise indicated.
4. Case Form: Adjustable angle unless otherwise indicated.
5. Tube: Glass with magnifying lens and blue or red organic liquid.
6. Tube Background: Nonreflective aluminum with permanently etched scale markings graduated in deg F.
7. Window: Glass.
8. Stem: Aluminum and of length to suit installation.
    a. Design for Air-Duct Installation: With ventilated shroud.
    b. Design for Thermowell Installation: Bare stem.
9. Connector: 1-1/4 inches, with ASME B1.1 screw threads.
10. Accuracy: Plus or minus 1 percent of scale range or one scale division, to a maximum of 1.5 percent of scale range.

I. Thermometers, Liquid in Glass - Plastic Case, Industrial Style:
1. Source Limitations: Provide liquid-in-glass, plastic-case, industrial-style thermometers from single manufacturer.
2. Standard: ASME B40.200.
3. Case: Plastic; 7-inch nominal size unless otherwise indicated.
4. Case Form: Adjustable angle unless otherwise indicated.
5. Tube: Glass with magnifying lens and blue or red organic liquid.
6. Tube Background: Nonreflective aluminum with permanently etched scale markings graduated in deg F.
7. Window: Glass.
8. Stem: Aluminum and of length to suit installation.
    a. Design for Air-Duct Installation: With ventilated shroud.
    b. Design for Thermowell Installation: Bare stem.
9. Connector: 1-1/4 inches, with ASME B1.1 screw threads.
10. Accuracy: Plus or minus 1 percent of scale range or one scale division, to a maximum of 1.5 percent of scale range.

J. Thermometers, Light Activated - Direct Mounted:
   1. Source Limitations: Provide light-activated, direct-mounted thermometers from single manufacturer.
   2. Case: Plastic; 7-inchnominal size unless otherwise indicated.
   3. Scale(s): Deg F.
   4. Case Form: Adjustable angle.
   5. Connector: 1-1/4 inches, with ASME B1.1 screw threads.
   6. Stem: Aluminum and of length to suit installation.
      a. Design for Air-Duct Installation: With ventilated shroud.
      b. Design for Thermowell Installation: Bare stem.
   7. Display: Digital.
   8. Accuracy: Plus or minus 2 deg F.
K. Thermometers, Light Activated - Remoted Mounted:
   1. Source Limitations: Provide light-activated, remote-mounted thermometers from single manufacturer.
   2. Case: Plastic, for wall mounting.
   3. Scale(s): Deg F.
   4. Sensor: Bulb and thermister wire.
      a. Design for Air-Duct Installation: With ventilated shroud.
      b. Design for Thermowell Installation: Bare stem.
   5. Display: Digital.
   6. Accuracy: Plus or minus 2 deg F.
L. Duct-Thermometer Mounting Brackets:
   1. Description: Flanged bracket with screw holes, for attachment to air duct and made to hold thermometer stem.
M. Thermowells:
   1. Standard: ASME B40.200.
   2. Description: Pressure-tight, socket-type fitting made for insertion in piping tee fitting.
   3. Material for Use with Copper Tubing: CNR.
   4. Material for Use with Steel Piping: CRES.
   5. Type: Stepped shank unless straight or tapered shank is indicated.
   6. External Threads: NPS 1/2, NPS 3/4, or NPS 1, ASME B1.20.1 pipe threads.
   7. Internal Threads: 1/2, 3/4, and 1 inch, with ASME B1.1 screw threads.
   8. Bore: Diameter required to match thermometer bulb or stem.
   9. Insertion Length: Length required to match thermometer bulb or stem.
   10. Lagging Extension: Include on thermowells for insulated piping and tubing.
   11. Bushings: For converting size of thermowell's internal screw thread to size of thermometer connection.
   12. Heat-Transfer Medium: Mixture of graphite and glycerin.
N. Pressure Gauges, Dial Type - Direct Mounted, Metal Case:
   1. Source Limitations: Provide dial-type, direct-mounted, metal-case pressure gauges from single manufacturer.
   2. Standard: ASME B40.100.
   3. Case: Liquid-filled type(s); cast aluminum or drawn steel 4-1/2-inch nominal diameter.
   4. Pressure-Element Assembly: Bourdon tube.
   5. Pressure Connection: Brass, with NPS 1/4, ASME B1.20.1 pipe threads and bottom-outlet type unless back-outlet type is indicated.
   6. Movement: Mechanical, with link to pressure element and connection to pointer.
   7. Dial: Nonreflective aluminum with permanent scale markings graduated in psi.
   8. Pointer: Dark-colored metal.
   9. Window: Glass.
   10. Ring: Metal.
   11. Accuracy: Grade A, plus or minus 1 percent of middle half of span.
O. Pressure Gauges, Dial Type - Direct Mounted, Plastic Case:

1. Source Limitations: Provide dial-type, direct-mounted, plastic-case pressure gauges from a single manufacturer.
2. Standard: ASME B40.100.
3. Case: Sealed type; Plastic; 4-1/2-inch nominal diameter.
4. Pressure-Element Assembly: Bourdon tube.
5. Pressure Connection: Brass, with NPS 1/4, ASME B1.20.1 pipe threads and bottom-outlet type unless back-outlet type is indicated.
6. Movement: Mechanical, with link to pressure element and connection to pointer.
7. Dial: Nonreflective aluminum with permanent scale markings graduated in psi.
8. Pointer: Dark-colored metal.
9. Window: Glass
10. Accuracy: Grade A, plus or minus 1 percent of middle half of span.

P. Pressure Gauges, Dial Type - Remote Mounted, Metal Case:
1. Source Limitations: Provide dial-type, remote-mounted, metal-case pressure gauges from a single manufacturer.
2. Standard: ASME B40.100.
3. Case: Liquid-filled type; cast aluminum or drawn steel 4-1/2-inch nominal diameter with back flange and holes for panel mounting.
4. Pressure-Element Assembly: Bourdon tube.
5. Pressure Connection: Brass, with NPS 1/4, ASME B1.20.1 pipe threads and bottom-outlet type unless back-outlet type is indicated.
6. Movement: Mechanical, with link to pressure element and connection to pointer.
7. Dial: Nonreflective aluminum with permanent scale markings graduated in psi.
8. Pointer: Dark-colored metal.
9. Window: Glass.
10. Ring: Metal.
11. Accuracy: Grade A, plus or minus 1 percent of middle half of span.

Q. Pressure Gauges, Dial Type - Remote Mounted, Plastic Case:
1. Source Limitations: Provide dial-type, remote-mounted, plastic-case pressure gauges from single manufacturer.
2. Standard: ASME B40.100.
3. Case: Sealed type; plastic; 3-1/2-inch nominal diameter with back flange and holes for panel mounting.
4. Pressure-Element Assembly: Bourdon tube.
5. Pressure Connection: Brass, with NPS 1/4, ASME B1.20.1 pipe threads and bottom-outlet type unless back-outlet type is indicated.
6. Movement: Mechanical, with link to pressure element and connection to pointer.
7. Dial: Nonreflective aluminum with permanent scale markings graduated in psi.
8. Pointer: Dark-colored metal.
9. Window: Glass.
10. Accuracy: Grade A, plus or minus 1 percent of middle half of span.

R. Gauge Attachments:
1. Snubbers: ASME B40.100, brass; with NPS 1/4, ASME B1.20.1 pipe threads and piston-type surge-dampening device. Include extension for use on insulated piping.
2. Siphons: Loop-shaped section of brass pipe with NPS 1/4 pipe threads.
3. Valves: Brass ball, with NPS 1/4, ASME B1.20.1 pipe threads.

S. Test Plugs:
1. Source Limitations: Provide test plugs from single manufacturer.
2. Description: Test-station fitting made for insertion in piping tee fitting.
3. Body: Brass or stainless steel with core inserts and gasketed and threaded cap. Include extended stem on units to be installed in insulated piping.
4. Thread Size: NPS 1/4, ASME B1.20.1 pipe thread.
5. Minimum Pressure and Temperature Rating: 500 psig at 200 deg F.
6. Core Inserts: Chlorosulfonated polyethylene synthetic self-sealing rubber.

T. Test-Plug Kits:
   1. Source Limitations: Provide test-plug kits from single manufacturer.
   2. Furnish one test-plug kit(s) containing one thermometer(s), one pressure gauge and adapter, and carrying case. Thermometer sensing elements, pressure gauge, and adapter probes are to be of diameter to fit test plugs and of length to project into piping.
   3. Low-Range Thermometer: Small, bimetallic insertion type with 1- to 2-inch-diameter dial and tapered-end sensing element. Dial range is to be at least 25 to 125 deg F.
   4. High-Range Thermometer: Small, bimetallic insertion type with 1- to 2-inch-diameter dial and tapered-end sensing element. Dial range is to be at least 0 to 220 deg F.
   5. Pressure Gauge: Small, Bourdon-tube insertion type with 2- to 3-inch-diameter dial and probe. Dial range shall be at least 0 to 200 psig.
   6. Carrying Case: Metal or plastic, with formed instrument padding.
U. Sight Flow Indicators:
   1. Source Limitations: Provide sight flow indicators from single manufacturer.
   2. Description: Piping inline-installation device for visual verification of flow.
   3. Construction: Bronze or stainless steel body, with sight glass and ball, flapper, or paddle wheel indicator, and threaded or flanged ends.
   4. Minimum Pressure Rating: 125 psig.
   5. Minimum Temperature Rating: 200 deg F.
   6. End Connections for NPS 2 (DN 50) and Smaller: Threaded.
   7. End Connections for NPS 2-1/2 (DN 65) and Larger: Flanged.
V. Flowmeters:
   1. Performance Requirements: Manufacturer is to certify that each flowmeter complies with specified performance requirements and characteristics.
   2. Flowmeters - Orifice:
      a. Source Limitations: Provide orifice flowmeters from single manufacturer.
      b. Description: Flowmeter with orifice plate and flanges, differential pressure sensor, hoses or tubing, fittings, valves, indicator, and conversion chart.
      c. Flow Range: Sensor and indicator are to cover operating range of equipment or system served.
      d. Orifice Plate: Wafer-orifice-type, calibrated, flow-measuring element; for installation between orifice plate pipe flanges.
         1) Design: Differential-pressure-type measurement for gas.
         2) Construction: Cast-iron body, brass valves with integral check valves and caps, and calibrated nameplate.
         3) Minimum Pressure Rating: 300 psig.
         4) Minimum Temperature Rating: 250 deg F.
      e. Permanent Indicators: Meter suitable for wall or bracket mounting, calibrated for connected sensor, and has 6-inch-diameter, or equivalent, dial with fittings and copper tubing for connecting to sensor.
         1) Accuracy: Plus or minus 1 percent between 20 and 80 percent of scale range
      f. Portable Indicators: Handheld, differential-pressure type, calibrated for connected sensor and having two 12 ft. hoses, with carrying case.
         1) Accuracy: Plus or minus 2 percent between 20 and 80 percent of scale range.
      g. Display: Shows rate of flow, with register to indicate total volume in gallons.
      h. Conversion Chart: Flow rate data compatible with sensor and indicator.
      i. Operating Instructions: Include complete instructions with each flowmeter.
   3. Flowmeters - Pitot Tube:
      a. Source Limitations: Provide pitot-tube flowmeters from single manufacturer.
      b. Description: Flowmeter with sensor and indicator.
      c. Flow Range: Sensor and indicator are to cover operating range of equipment or system served.
      d. Sensor: Insertion type; for inserting probe in piping and measuring flow directly in gpm.
         1) Design: Differential-pressure-type measurement for oil.
         2) Construction: Stainless steel probe of length to span inside of pipe, with integral transmitter and direct-reading scale.

3) Fitting for mounting probe in pipe, with weld connection for attachment to pipe. Provide way to permit removal of probe for service.
4) Minimum Pressure Rating: 150 psig.
5) Minimum Temperature Rating: 250 deg F.

e. Indicator: Handheld meter; either an integral part of sensor or a separate meter.

f. Integral Transformer: For low-voltage power connection.

g. Accuracy: Plus or minus 3 percent.

h. Display: Shows rate of flow, with register to indicate total volume in gallons.

i. Operating Instructions: Include complete instructions with each flowmeter.

4. Flowmeters - Turbine:

a. Source Limitations: Provide turbine flowmeters from single manufacturer.

b. Description: Flowmeter with sensor and indicator.

c. Flow Range: Sensor and indicator are to cover operating range of equipment or system served.

d. Sensor: Impeller turbine; for inserting in pipe fitting or for installing in piping and measuring flow directly in gpm.

1) Design: Device or pipe fitting with inline turbine and integral direct-reading scale for gas.
2) Construction: Bronze or stainless steel body, with plastic turbine or impeller.
3) Fitting for mounting probe in pipe, with weld connection for attachment to pipe. Provide way to permit removal of probe for service.
4) Minimum Pressure Rating: 150 psig.
5) Minimum Temperature Rating: 180 deg F

e. Indicator: Handheld meter; either an integral part of sensor or a separate meter.

f. Accuracy: Plus or minus 1-1/2 percent.

g. Display: Shows rate of flow, with register to indicate total volume in gallons.

h. Operating Instructions: Include complete instructions with each flowmeter.

5. Flowmeters - Venturi:

a. Source Limitations: Provide venture flowmeters from single manufacturer.

b. Description: Flowmeter with calibrated flow-measuring element, hoses or tubing, fittings, valves, indicator, and conversion chart.

c. Flow Range: Sensor and indicator are to cover operating range of equipment or system served.

d. Flow-Measuring Element:

1) Design: Differential-pressure-type measurement for gas.
2) Venturi type with in-line element.
3) Construction: Bronze, brass, or factory-primed steel, with brass fittings and attached tag with flow conversion data.
4) Minimum Pressure Rating: 250 psig.
5) Minimum Temperature Rating: 250 deg F.
6) End Connections for NPS 2 (DN 50) and Smaller: Threaded.
7) End Connections for NPS 2-1/2 (DN 65) and Larger: Flanged or welded.
8) Flow Range: Flow-measuring element and flowmeter are to cover operating range of equipment or system served.

e. Permanent Indicators: Meter suitable for wall or bracket mounting, calibrated for connected flowmeter element, and has 6-inch-diameter, or equivalent, dial with fittings and copper tubing for connecting to flowmeter element.

1) Accuracy: Plus or minus 1 percent between 20 and 80 percent of scale range.

f. Display: Shows rate of flow, with register to indicate total volume in gallons.

g. Conversion Chart: Flow rate data compatible with sensor.

h. Operating Instructions: Include complete instructions with each flowmeter.

PART 3 EXECUTION

3.1 INSTALLATION OF EXPANSION JOINTS - GENERAL

A. Install expansion joints of sizes matching sizes of piping in which they are installed.

3.2 INSTALLATION OF PACKED EXPANSION JOINTS

A. Install packed expansion joints with packing suitable for fluid service.

3.3 INSTALLATION OF PACKLESS EXPANSION JOINTS

A. Install metal-bellows packless expansion joints in accordance with EJMA's "Standards of the Expansion Joint Manufacturers Association, Inc."
B. Install rubber packless expansion joints in accordance with FSA-PSJ-703.

3.4 INSTALLATION OF GROOVED-JOINT EXPANSION JOINTS

A. Install grooved-joint expansion joints to grooved-end steel piping.

3.5 INSTALLATION OF ALIGNMENT GUIDES AND ANCHORS

A. Install alignment guides to guide expansion and to avoid end-loading and torsional stress.
B. Install one guide(s) on each side of pipe expansion fittings and loops. Install guides nearest to expansion joint not more than four pipe diameters from expansion joint.
C. Attach guides to pipe, and secure guides to building structure.
D. Install anchors at locations to prevent stresses from exceeding those permitted by ASME B31.9 and to prevent transfer of loading and stresses to connected equipment.
E. Anchor Attachments:
    1. Anchor Attachment to Steel Pipe: Attach by welding. Comply with ASME B31.9.
    2. Anchor Attachment to Copper Tubing: Attach with pipe hangers. Use MSS SP-58, Type 24; U bolts bolted to anchor.
F. Fabricate and install steel anchors by welding steel shapes, plates, and bars. Comply with ASME B31.9 and AWS D1.1/D1.1M.
    1. Anchor Attachment to Steel Structural Members: Attach by welding.
    2. Anchor Attachment to Concrete Structural Members: Attach by fasteners. Follow fastener manufacturer's written instructions.
    3. Use grout to form flat bearing surfaces for guides and anchors attached to concrete.

3.6 INSTALLATION OF PIPE LOOPS AND SWING CONNECTIONS

A. Install pipe loops cold-sprung in tension or compression as required to partly absorb tension or compression produced during anticipated change in temperature.
B. Connect risers and branch connections to mains with at least five pipe fittings, including tee in main.
C. Connect risers and branch connections to terminal units with at least four pipe fittings, including tee in riser.
D. Connect mains and branch connections to terminal units with at least four pipe fittings, including tee in main.

3.7 INSTALLATION OF SLEEVES - GENERAL

A. Install sleeves for piping passing through penetrations in floors, partitions, roofs, and walls.
B. For sleeves that will have sleeve-seal system installed, select sleeves of size large enough to provide1-inch annular clear space between piping and concrete slabs and walls.
    1. Sleeves are not required for core-drilled holes.
C. Install sleeves in concrete floors, concrete roof slabs, and concrete walls as new slabs and walls are constructed.
    1. Permanent sleeves are not required for holes in slabs formed by molded-PE or -PP sleeves.

2. Cut sleeves to length for mounting flush with both surfaces.
   a. Exception: Extend sleeves installed in floors of mechanical equipment areas or other wet areas 2 inches above finished floor level.
3. Using grout seal space outside of sleeves in floors/slabs/walls without sleeve-seal system. Select to maintain fire resistance of floor/slab/wall.

D. Install sleeves for pipes passing through interior partitions.
1. Cut sleeves to length for mounting flush with both surfaces.
2. Install sleeves that are large enough to provide 1/4-inch annular clear space between sleeve and pipe or pipe insulation.
3. Seal annular space between sleeve and piping or piping insulation; use joint sealants that joint sealant manufacturer's literature indicates is appropriate for size, depth, and location of joint.

E. Fire-Resistance-Rated Penetrations, Horizontal Assembly Penetrations, and Smoke-Barrier Penetrations: Maintain indicated fire or smoke rating of walls, partitions, ceilings, and floors at pipe penetrations. Seal pipe penetrations with fire- and smoke-stop materials. Comply with requirements for firestopping and fill materials specified in Section 078413 "Penetration Firestopping."

3.8 INSTALLATION OF SLEEVES WITH WATERSTOP

A. Install sleeve with waterstop as new walls and slabs are constructed.
B. Assemble fitting components of length to be flush with both surfaces of concrete slabs and walls. Position waterstop flange centered across width of concrete slab or wall.
C. Secure nailing flanges to wooden concrete forms.
D. Using grout, seal space around outside of sleeves.

3.9 INSTALLATION OF STACK-SLEEVE FITTINGS

A. Install stack-sleeve fittings in new slabs as slabs are constructed.
1. Install fittings that are large enough to provide 1/4-inch annular clear space between sleeve and pipe or pipe insulation.
2. Secure flashing between clamping flanges for pipes penetrating floors with membrane waterproofing. Comply with requirements for flashing specified in Section 076200 "Sheet Metal Flashing and Trim."
3. Install section of cast-iron soil pipe to extend sleeve to 3 inches above finished floor level.
4. Extend cast-iron sleeve fittings below floor slab as required to secure clamping ring if ring is specified.
5. Using silicone sealant, seal space between top hub of stack-sleeve fitting and pipe.

B. Fire-Resistance-Rated Penetrations, Horizontal Assembly Penetrations, and Smoke Barrier Penetrations: Maintain indicated fire or smoke rating of floors at pipe penetrations. Seal pipe penetrations with fire- and smoke-stop materials. Comply with requirements for firestopping specified in Section 078413 "Penetration Firestopping."

3.10 INSTALLATION OF SLEEVE-SEAL SYSTEMS

A. Install sleeve-seal systems in sleeves in exterior concrete walls and slabs-on-grade at service piping entries into building, and passing through exterior walls.
B. Select type, size, and number of sealing elements required for piping material and size and for sleeve ID or hole size. Assemble sleeve-seal system components, and install in annular space between piping and sleeve. Tighten bolts against pressure plates that cause sealing elements to expand and make a watertight seal.

3.11 INSTALLATION OF ESCUTCHEONS

A. Install escutcheons for piping penetrations of walls, ceilings, and finished floors.
B. Install escutcheons with ID to closely fit around pipe, tube, and insulation of insulated piping and with OD that completely covers opening.

3.12 INSTALLATION OF METERS AND GAUGES

A. Install thermowells with socket extending a minimum of 2 inches into fluid and in vertical position in piping tees.
B. Install thermowells of sizes required to match thermometer connectors. Include bushings if required to match sizes.
C. Install thermowells with extension on insulated piping.
D. Fill thermowells with heat-transfer medium.
E. Install direct-mounted thermometers in thermowells and adjust vertical and tilted positions.
F. Install remote-mounted thermometer bulbs in thermowells and install cases on panels; connect cases with tubing, and support tubing to prevent kinks. Use minimum tubing length.
G. Install pipe-mounted thermal-energy temperature sensors in thermowells and extend wiring to indicator.
H. Install duct-thermometer-mounting brackets in walls of ducts. Attach to duct with screws.
I. Install direct-mounted pressure gauges in piping tees with pressure gauge located on pipe at the most readable position.
J. Install remote-mounted pressure gauges on panel.
K. Install valve and snubber in piping for each pressure gauge for fluids (except steam).
L. Install valve and syphon fitting in piping for each pressure gauge for steam.
M. Install test plugs in piping tees.
N. Install flow indicators in piping systems in accessible positions for easy viewing.
O. Assemble and install connections, tubing, and accessories between flow-measuring elements and flowmeters according to manufacturer's written instructions.
P. Install flowmeter elements in accessible positions in piping systems.
Q. Install wafer-orifice flowmeter elements between orifice-type pipe flanges.
R. Install all flowmeter elements, with at least minimum straight lengths of pipe, upstream and downstream from element according to manufacturer's written instructions.
S. Install permanent indicators on walls or brackets in accessible and readable positions.
T. Install connection fittings in accessible locations for attachment to portable indicators.
U. Mount thermal-energy meters on wall if accessible; if not, provide brackets to support meters.
V. Install thermometers in the following locations:
    1. Inlet and outlet of each hydronic zone.
    2. Inlet and outlet of each hydronic boiler.
    3. Two inlets and two outlets of each chiller.
    4. Inlet and outlet of each hydronic coil in air-handling units.
    5. Two inlets and two outlets of each hydronic heat exchanger.
    6. Inlet and outlet of each thermal-storage tank.
    7. Outside-, return-, supply-, and mixed-air ducts.
W. Install pressure gauges in the following locations:
    1. Discharge of each pressure-reducing valve.
    2. Inlet and outlet of each chiller chilled-water and condenser-water connection.
    3. Suction and discharge of each pump.

3.13 CONNECTIONS

A. Install meters and gauges adjacent to machines and equipment to allow space for service and maintenance of meters, gauges, machines, and equipment.
B. Connect flowmeter-system elements to meters.
C. Connect flowmeter transmitters to meters.
D. Connect thermal-energy meter transmitters to meters.

3.14 ADJUSTING

A. After installation, calibrate meters according to manufacturer's written instructions.
B. Adjust faces of meters and gauges to proper angle for best visibility.

3.15 FIELD QUALITY CONTROL

A. Sleeves and Sleeve Seals:
   1. Perform the following tests and inspections:
      a. Leak Test: After allowing for a full cure, test sleeves and sleeve seals for leaks. Repair leaks and retest until no leaks exist.
      b. Sleeves and sleeve seals will be considered defective if they do not pass tests and inspections.
   2. Prepare test and inspection reports.

B. Escutcheons:
   1. Using new materials, replace broken and damaged escutcheons and floor plates.

3.16 SLEEVES APPLICATION

A. Use sleeves and sleeve seals for the following piping-penetration applications:
   1. Exterior Concrete Walls above and below Grade:
      a. Sleeves with waterstops.
         1) Select sleeve size to allow for 1-inch annular clear space between piping and sleeve for installing sleeve-seal system.
   2. Concrete Slabs-on-Grade:
      a. Sleeves with waterstops.
         1) Select sleeve size to allow for 1-inch annular clear space between piping and sleeve for installing sleeve-seal system.
   3. Concrete Slabs above Grade:
      a. Sleeves with waterstops.
   4. Interior Walls and Partitions:
      a. Sleeves without waterstops.

3.17 ESCUTCHEONS APPLICATION

A. Escutcheons for New Piping and Relocated Existing Piping:
   1. Piping with Fitting or Sleeve Protruding from Wall: One piece, deep pattern.
   2. Chrome-Plated Piping: One piece, steel with polished, chrome-plated finish.
   3. Insulated Piping:
      a. One piece, steel with polished, chrome-plated finish.
   4. Bare Piping at Wall and Floor Penetrations in Finished Spaces:
      a. One piece, steel with polished, chrome-plated finish.
   5. Bare Piping at Ceiling Penetrations in Finished Spaces:
      a. One piece, steel with polished, chrome-plated finish.
   6. Bare Piping in Unfinished Service Spaces:
      a. One piece, steel with polished, chrome-plated finish.
   7. Bare Piping in Equipment Rooms:
      a. One piece, steel with polished, chrome-plated finish.

B. Escutcheons for Existing Piping to Remain:
   1. Chrome-Plated Piping: Split plate, stamped steel with concealed hinge with polished, chrome-plated finish.
   2. Insulated Piping: Split plate, stamped steel with concealed hinge with polished, chrome-plated finish.
   3. Bare Piping at Wall and Floor Penetrations in Finished Spaces: Split plate, stamped steel with concealed hinge with polished, chrome-plated finish.
   4. Bare Piping at Ceiling Penetrations in Finished Spaces: Split plate, stamped steel with concealed hinge with polished, chrome-plated finish.
   5. Bare Piping in Unfinished Service Spaces: Split plate, stamped steel with concealed hinge with polished, chrome-plated finish.
   6. Bare Piping in Equipment Rooms: Split plate, stamped steel with concealed hinge with polished, chrome-plated finish.

C. Install floor plates for piping penetrations of equipment-room floors.
D. Install floor plates with ID to closely fit around pipe, tube, and insulation of piping and with OD that completely covers opening.
   1. New Piping and Relocated Existing Piping: Split floor plate.
   2. Existing Piping to Remain: Split floor plate.

3.18 THERMOMETER APPLICATION

A. Thermometers at inlet and outlet of each hydronic zone are to be the following:
   1. Liquid-filled bimetallic-actuated type.
   2. Test plug with chlorosulfonated polyethylene synthetic self-sealing rubber inserts.
B. Thermometers at inlet and outlet of each hydronic boiler are to be the following:
   1. Liquid-filled bimetallic-actuated type.
   2. Test plug with chlorosulfonated polyethylene synthetic self-sealing rubber inserts.
C. Thermometers at inlets and outlets of each chiller are to be the following:
   1. Liquid-filled bimetallic-actuated type.
   2. Test plug with chlorosulfonated polyethylene synthetic self-sealing rubber inserts.
D. Thermometers at inlet and outlet of each hydronic coil in air-handling units and built-up central systems are to be the following:
   1. Liquid-filled bimetallic-actuated type.
   2. Test plug with chlorosulfonated polyethylene synthetic self-sealing rubber inserts.
E. Thermometers at inlets and outlets of each hydronic heat exchanger are to be the following:
   1. Liquid-filled bimetallic-actuated type.
   2. Test plug with chlorosulfonated polyethylene synthetic self-sealing rubber inserts.
F. Thermometers at inlet and outlet of each hydronic heat-recovery unit are to be the following:
   1. Liquid-filled bimetallic-actuated type.
   2. Test plug with chlorosulfonated polyethylene synthetic self-sealing rubber inserts.
G. Thermometers at inlet and outlet of each thermal-storage tank are to be the following:
   1. Liquid-filled bimetallic-actuated type.
   2. Test plug with chlorosulfonated polyethylene synthetic self-sealing rubber inserts.
H. Thermometers at outside-, return-, supply-, and mixed-air ducts are to be the following:
   1. Liquid-filled, bimetallic-actuated type.
I. Thermometer stems are to be of length to match thermowell insertion length.

3.19 THERMOMETER SCALE-RANGE APPLICATION

A. Scale Range for Chilled-Water Piping:
   1. Minus 40 to plus 160 deg F]
B. cale Range for Condenser-Water Piping:
   1. 0 to 150 deg F] [0 to 150 deg F and minus 20 to plus 70 deg C.
C. Scale Range for Heating, Hot-Water Piping:
   1. 30 to 240 deg F] [30 to 240 deg F and 0 to plus 115 deg C].
D. Scale Range for Steam and Steam-Condensate Piping:
   1. 30 to 240 deg F] [30 to 240 deg F and 0 to plus 115 deg C.
E. Scale Range for Air Ducts:
   1. 0 to 100 deg F]

3.20 PRESSURE-GAUGE APPLICATION

A. Pressure gauges at discharge of each pressure-reducing valve are to be the following:
   1. Liquid filled mounted, metal case.
B. Pressure gauges at inlet and outlet of each chiller chilled-water and condenser-water connection are to be the following:
   1. Liquid filled mounted, metal case.
   2. Test plug with chlorosulfonated polyethylene synthetic self-sealing rubber inserts.

C. Pressure gauges at suction and discharge of each pump are to be the following:
   1. Liquid filled mounted, metal case.
   2. Test plug with chlorosulfonated polyethylene synthetic self-sealing rubber inserts.

3.21 PRESSURE-GAUGE SCALE-RANGE APPLICATION

A. Scale Range for Chilled-Water Piping:
   1. 0 to 30 psi] [0 to 30 psi and 0 to 240 kPa].
B. Scale Range for Condenser-Water Piping:
   1. 0 to 30 psi] [0 to 30 psi and 0 to 240 kPa].
C. Scale Range for Heating, Hot-Water Piping:
   1. 0 to 30 psi] [0 to 30 psi and 0 to 240 kPa.
D. Scale Range for Steam Piping:
   1. 0 to 300 psi] [0 to 300 psi and 0 to 2500 kPa.

END OF SECTION

SECTION 230513 - COMMON MOTOR REQUIREMENTS FOR HVAC EQUIPMENT

PART 1 GENERAL

1.1 SUMMARY

A. Section includes general requirements for single-phase and polyphase, general-purpose, horizontal, small and medium, squirrel-cage induction motors for use on alternating-current power systems up to 600 V and installed at equipment manufacturer's factory or shipped separately by equipment manufacturer for field installation.

1.2 COORDINATION

A. Coordinate features of motors, installed units, and accessory devices to be compatible with the following:
   1. Motor controllers.
   2. Torque, speed, and horsepower requirements of the load.
   3. Ratings and characteristics of supply circuit and required control sequence.
   4. Ambient and environmental conditions of installation location.

PART 2 PRODUCTS

2.1 GENERAL MOTOR REQUIREMENTS

A. Comply with NEMA MG 1 unless otherwise indicated.
B. Comply with IEEE 841 for severe-duty motors.

2.2 MOTOR CHARACTERISTICS

A. Duty: Continuous duty at ambient temperature of 40 deg C and at altitude of 3300 feet above sea level.
B. Capacity and Torque Characteristics: Sufficient to start, accelerate, and operate connected loads at designated speeds, at installed altitude and environment, with indicated operating sequence, and without exceeding nameplate ratings or considering service factor.

2.3 POLYPHASE MOTORS

A. Description: NEMA MG 1, Design B, medium induction motor.
B. Efficiency: Premium efficient, as defined in NEMA MG 1.
C. Service Factor: 1.15.
D. Multispeed Motors: Variable torque.
   1. For motors with 2:1 speed ratio, consequent pole, single winding.
   2. For motors with other than 2:1 speed ratio, separate winding for each speed.
E. Multispeed Motors: Separate winding for each speed.
F. Rotor: Random-wound, squirrel cage.
G. Bearings: Regreasable, shielded, antifriction ball bearings suitable for radial and thrust loading.
H. Temperature Rise: Match insulation rating.
I. Insulation: Class F.
J. Code Letter Designation:
   1. Motors 15 HP and Larger: NEMA starting Code F or Code G.
   2. Motors Smaller Than 15 HP: Manufacturer's standard starting characteristic.
K. Enclosure Material: Cast iron for motor frame sizes 324T and larger; rolled steel for motor frame sizes smaller than 324T.

2.4 ADDITIONAL REQUIREMENTS FOR POLYPHASE MOTORS

A. Motors Used with Reduced-Voltage and Multispeed Controllers: Match wiring connection requirements for controller with required motor leads. Provide terminals in motor terminal box, suited to control method.

B. Motors Used with Variable-Frequency Controllers:

1. Windings: Copper magnet wire with moisture-resistant insulation varnish, designed and tested to resist transient spikes, high frequencies, and short time rise pulses produced by pulse-width-modulated inverters.
2. Premium-Efficient Motors: Class B temperature rise; Class F insulation.
3. Inverter-Duty Motors: Class F temperature rise; Class H insulation.
4. Thermal Protection: Comply with NEMA MG 1 requirements for thermally protected motors.

C. Severe-Duty Motors: Comply with IEEE 841, with 1.15 minimum service factor.

2.5 SINGLE-PHASE MOTORS

A. Motors larger than 1/20 hp shall be one of the following, to suit starting torque and requirements of specific motor application:

1. Permanent-split capacitor.
2. Split phase.
3. Capacitor start, inductor run.
4. Capacitor start, capacitor run.

B. Multispeed Motors: Variable-torque, permanent-split-capacitor type.

C. Bearings: Prelubricated, antifriction ball bearings or sleeve bearings suitable for radial and thrust loading.

D. Motors 1/20 HP and Smaller: Shaded-pole type.

E. Thermal Protection: Internal protection to automatically open power supply circuit to motor when winding temperature exceeds a safe value calibrated to temperature rating of motor insulation. Thermal-protection device shall automatically reset when motor temperature returns to normal range.

PART 3 EXECUTION (NOT APPLICABLE)

END OF SECTION 230513

SECTION 230529 - HANGERS AND SUPPORTS FOR HVAC PIPING AND EQUIPMENT

PART 1 GENERAL

1.1 SUMMARY

A. Section Includes:
1. Metal pipe hangers and supports.
2. Trapeze pipe hangers.
3. Fiberglass pipe hangers.
4. Metal framing systems.
5. Fiberglass strut systems.
6. Thermal-hanger shield inserts.
7. Fastener systems.
8. Pipe stands.
9. Equipment stands.
10. Equipment supports.

B. Related Requirements:
1. Section 055000 "Metal Fabrications" for structural-steel shapes and plates for trapeze hangers for pipe and equipment supports.
2. Section 230500 "Common Work Results for HVAC" for pipe guides and anchors.
3. Section 230548 "Vibration and Seismic Controls for HVAC for vibration isolation devices.
4. Section 233113 "Metal Ducts for duct hangers and supports.

1.2 ACTION SUBMITTALS

A. Product Data: For each type of product.

B. Shop Drawings: Show fabrication and installation details and include calculations for the following; include Product Data for components:
1. Trapeze pipe hangers.
2. Metal framing systems.
3. Fiberglass strut systems.
4. Pipe stands.
5. Equipment supports.

C. Delegated Design Submittals: For trapeze hangers indicated to comply with performance requirements and design criteria, including analysis data signed and sealed by the qualified professional engineer responsible for their preparation.
1. Detail fabrication and assembly of trapeze hangers.
2. Include design calculations for designing trapeze hangers.

1.3 INFORMATIONAL SUBMITTALS

A. Welding certificates.

1.4 QUALITY ASSURANCE

A. Structural-Steel Welding Qualifications: Qualify procedures and personnel according to AWS D1.1/D1.1M, "Structural Welding Code - Steel."

B. Pipe Welding Qualifications: Qualify procedures and operators according to ASME Boiler and Pressure Vessel Code, Section IX.

PART 2 PRODUCTS

2.1 PERFORMANCE REQUIREMENTS

A. Delegated Design: Engage a qualified professional engineer, as defined in Section 014000 "Quality Requirements," to design trapeze pipe hangers and equipment supports.

B. Structural Performance: Hangers and supports for HVAC piping and equipment shall withstand the effects of gravity loads and stresses within limits and under conditions.

1. Design supports for multiple pipes, including pipe stands, capable of supporting combined weight of supported systems, system contents, and test water.
2. Design equipment supports capable of supporting combined operating weight of supported equipment and connected systems and components.
3. Design seismic-restraint hangers and supports for piping and equipment.

2.2 METAL PIPE HANGERS AND SUPPORTS

A. Carbon-Steel Pipe Hangers and Supports:

1. Description: MSS SP-58, Types 1 through 58, factory-fabricated components.
2. Galvanized Metallic Coatings: Pregalvanized, hot-dip galvanized, or electro-galvanized.
3. Nonmetallic Coatings: Plastic coated, or epoxy powder-coated.
4. Padded Hangers: Hanger with fiberglass or other pipe insulation pad or cushion to support bearing surface of piping.
5. Hanger Rods: Continuous-thread rod, nuts, and washer made of carbon steel.

B. Copper Pipe and Tube Hangers:

1. Description: MSS SP-58, Types 1 through 58, copper-plated steel, factory-fabricated components.
2. Hanger Rods: Continuous-thread rod, nuts, and washer made of copper-plated steel.

2.3 TRAPEZE PIPE HANGERS

A. Description: MSS SP-58, Type 59, shop- or field-fabricated pipe-support assembly made from structural carbon-steel shapes with MSS SP-58 carbon-steel hanger rods, nuts, saddles, and U-bolts.

2.4 METAL FRAMING SYSTEMS

A. MFMA Manufacturer Metal Framing Systems:

1. Description: Shop- or field-fabricated, pipe-support assembly made of steel channels, accessories, fittings, and other components for supporting multiple parallel pipes.
2. Standard: Comply with MFMA-4 factory-fabricated components for field assembly.
3. Channels: Continuous slotted carbon-steel channel with inturned lips.
4. Channel Width: Selected for applicable load criteria.
5. Channel Nuts: Formed or stamped nuts or other devices designed to fit into channel slot and, when tightened, prevent slipping along channel.
6. Hanger Rods: Continuous-thread rod, nuts, and washer made of galvanized steel.
7. Metallic Coating: No coating.

B. Non-MFMA Manufacturer Metal Framing Systems:

1. Description: Shop- or field-fabricated, pipe-support assembly made of steel channels, accessories, fittings, and other components for supporting multiple parallel pipes.
2. Standard: Comply with MFMA-4 factory-fabricated components for field assembly.
3. Channels: Continuous slotted carbon-steel channel with inturned lips.
4. Channel Width: Select for applicable load criteria.
5. Channel Nuts: Formed or stamped nuts or other devices designed to fit into channel slot and, when tightened, prevent slipping along channel.
6. Hanger Rods: Continuous-thread rod, nuts, and washer made of galvanized steel
7. Metallic Coating: No coating.

2.5 THERMAL-HANGER SHIELD INSERTS

A. Insulation-Insert Material for Cold Piping: ASTM C552, Type II cellular glass with 100-psi minimum compressive strength and vapor barrier.

B. Insulation-Insert Material for Hot Piping: Water-repellent-treated, ASTM C533, Type I calcium silicate with 100-psi minimum compressive strength.

C. For Trapeze or Clamped Systems: Insert and shield shall cover entire circumference of pipe.

D. For Clevis or Band Hangers: Insert and shield shall cover lower 180 degrees of pipe.

E. Insert Length: Extend 2 inches beyond sheet metal shield for piping operating below ambient air temperature.

2.6 FASTENER SYSTEMS

A. Mechanical-Expansion Anchors: Insert-wedge-type anchors for use in hardened portland cement concrete; with pull-out, tension, and shear capacities appropriate for supported loads and building materials where used.

1. Indoor Applications: Zinc-coated steel.
2. Outdoor Applications: Stainless steel.

2.7 PIPE STANDS

A. General Requirements for Pipe Stands: Shop- or field-fabricated assemblies made of manufactured corrosion-resistant components to support roof-mounted piping.

B. Compact Pipe Stand:

1. Description: Single base unit with integral-rod roller, pipe clamps, or V-shaped cradle to support pipe, for roof installation without membrane penetration.
2. Hardware: Galvanized steel or polycarbonate.
3. Accessories: Protection pads.

C. Low-Profile, Single Base, Single-Pipe Stand:

1. Description: Single base with vertical and horizontal members, and pipe support, for roof installation without membrane protection.
2. Vertical Members: Two, galvanized- steel, continuous-thread 1/2-inch rods.
3. Horizontal Member: Adjustable horizontal, galvanized- steel pipe support channels.
4. Pipe Supports: Roller.
5. Hardware: Galvanized steel.
6. Accessories: Protection pads.

D. High-Profile, Single Base, Single-Pipe Stand:

1. Description: Single base, vertical and horizontal members, and pipe support, for roof installation without membrane penetration.
2. Vertical Members: Two, galvanized- steel, continuous-thread 1/2-inch rods.
3. Horizontal Member: One, adjustable height, galvanized- steel pipe support slotted channel or plate.
4. Pipe Supports: Roller.
5. Hardware: Galvanized steel.
6. Accessories: Protection pads, 1/2-inch continuous-thread galvanized-steel rod.
7. Height: 36 inches above roof.

E. High-Profile, Multiple-Pipe Stand:

1. Description: Assembly of bases, vertical and horizontal members, and pipe supports, for roof installation without membrane penetration.
2. Vertical Members: Two or more, galvanized- steel channels.
3. Horizontal Members: One or more, adjustable height, galvanized- steel pipe support.
4. Pipe Supports: Roller.
5. Hardware: Galvanized steel.
6. Accessories: Protection pads, 1/2-inch continuous-thread rod.
7. Height: 36 inches above roof.

F. Curb-Mounted-Type Pipe Stands: Shop- or field-fabricated pipe supports made from structural-steel shapes, continuous-thread rods, and rollers, for mounting on permanent stationary roof curb.

2.8 EQUIPMENT SUPPORTS

A. Description: Welded, shop- or field-fabricated equipment support made from structural carbon-steel shapes.

2.9 OUTDOOR EQUIPMENT STANDS

A. Description: Individual foot supports with elevated adjustable channel cross bars and clamps/fasteners/bolts for ground or roof supported outdoor equipment components, without roof membrane penetration, in a pre-fabricated system that can be modularly-assembled on site.
B. Foot Material: Rubber or polypropylene.
C. Rails Material: Hot dip galvanized carbon steel.
D. Wind/Sliding Load Resistance: Up to 100 mph minimum.

2.10 MATERIALS

A. Aluminum: ASTM B221.
B. Carbon Steel: ASTM A1011/A1011M.
C. Structural Steel: ASTM A36/A36M, carbon-steel plates, shapes, and bars; galvanized.
D. Stainless Steel: ASTM A240/A240M.
E. Threaded Rods: Continuously threaded. Zinc-plated or galvanized steel for indoor applications and stainless steel for outdoor applications. Mating nuts and washers of similar materials as rods.
F. Grout: ASTM C1107/C1107M, factory-mixed and -packaged, dry, hydraulic-cement, nonshrink and nonmetallic grout; suitable for interior and exterior applications.
   1. Properties: Nonstaining, noncorrosive, and nongaseous.
   2. Design Mix: 5000-psi, 28-day compressive strength.

PART 3 EXECUTION

3.1 APPLICATION

A. Comply with requirements in Section 078413 "Penetration Firestopping" for firestopping materials and installation for penetrations through fire-rated walls, ceilings, and assemblies.
B. Strength of Support Assemblies: Where not indicated, select sizes of components so strength will be adequate to carry present and future static loads within specified loading limits. Minimum static design load used for strength determination shall be weight of supported components plus 200 lb.

3.2 INSTALLATION OF HANGERS AND SUPPORTS

A. Metal Pipe-Hanger Installation: Comply with MSS SP-58. Install hangers, supports, clamps, and attachments as required to properly support piping from the building structure.
B. Metal Trapeze Pipe-Hanger Installation: Comply with MSS SP-58. Arrange for grouping of parallel runs of horizontal piping, and support together on field-fabricated trapeze pipe hangers.
   1. Pipes of Various Sizes: Support together and space trapezes for smallest pipe size or install intermediate supports for smaller diameter pipes as specified for individual pipe hangers.
   2. Field fabricate from ASTM A36/A36M, carbon-steel shapes selected for loads being supported. Weld steel according to AWS D1.1/D1.1M.
C. Fiberglass Pipe-Hanger Installation: Comply with applicable portions of MSS SP-58. Install hangers and attachments as required to properly support piping from building structure.
D. Framing System Installation: Metal. Arrange for grouping of parallel runs of piping, and support together on field-assembled strut systems.
E. Thermal-Hanger Shield Installation: Install in pipe hanger or shield for insulated piping.
F. Fastener System Installation:
   1. Install powder-actuated fasteners for use in lightweight concrete or concrete slabs less than 4 inches thick in concrete after concrete is placed and completely cured. Use operators that are licensed by powder-actuated tool manufacturer. Install fasteners according to powder-actuated tool manufacturer's operating manual.

2. Install mechanical-expansion anchors in concrete after concrete is placed and completely cured. Install fasteners according to manufacturer's written instructions.

G. Pipe Stand Installation:

1. Pipe Stand Types except Curb-Mounted Type: Assemble components and mount on smooth roof surface. Do not penetrate roof membrane.
2. Curb-Mounted-Type Pipe Stands: Assemble components or fabricate pipe stand and mount on permanent, stationary roof curb. See Section 077200 "Roof Accessories" for curbs.

H. Install hangers and supports complete with necessary attachments, inserts, bolts, rods, nuts, washers, and other accessories.

I. Equipment Support Installation: Fabricate from welded-structural-steel shapes.

J. Install hangers and supports to allow controlled thermal and seismic movement of piping systems, to permit freedom of movement between pipe anchors, and to facilitate action of expansion joints, expansion loops, expansion bends, and similar units.

K. Install lateral bracing with pipe hangers and supports to prevent swaying.

L. Install building attachments within concrete slabs or attach to structural steel. Install additional attachments at concentrated loads, including valves, flanges, and strainers, NPS 2-1/2 and larger and at changes in direction of piping. Install concrete inserts before concrete is placed; fasten inserts to forms and install reinforcing bars through openings at top of inserts.

M. Load Distribution: Install hangers and supports so that piping live and dead loads and stresses from movement will not be transmitted to connected equipment.

N. Pipe Slopes: Install hangers and supports to provide indicated pipe slopes and to not exceed maximum pipe deflections allowed by ASME B31.9 for building services piping.

O. Insulated Piping:

1. Attach clamps and spacers to piping.
   a. Piping Operating above Ambient Air Temperature: Clamp may project through insulation.
   b. Piping Operating below Ambient Air Temperature: Use thermal-hanger shield insert with clamp sized to match OD of insert.
   c. Do not exceed pipe stress limits allowed by ASME B31.9 for building services piping.
2. Install MSS SP-58, Type 39, protection saddles if insulation without vapor barrier is indicated. Fill interior voids with insulation that matches adjoining insulation.
   a. Thermal-hanger shield inserts may be used as an option. Include steel weight-distribution plate for pipe NPS 4 and larger if pipe is installed on rollers.
3. Install MSS SP-58, Type 40, protective shields on cold piping with vapor barrier. Shields shall span an arc of 180 degrees.
   a. Thermal-hanger shield inserts may be used as an option. Include steel weight-distribution plate for pipe NPS 4 and larger if pipe is installed on rollers.
4. Shield Dimensions for Pipe: Not less than the following:
   a. NPS 1/4 to NPS 3-1/2 (DN 8 to DN 90): 12 inches long and 0.048 inch thick.
   b. NPS 4 (DN 100): 12 inches long and 0.06 inch thick.
   c. NPS 5 and NPS 6 (DN 125 and DN 150): 18 inches long and 0.06 inch thick.
   d. NPS 8 to NPS 14 (DN 200 to DN 350): 24 inches long and 0.075 inch thick.
   e. NPS 16 to NPS 24 (DN 400 to DN 600): 24 inches long and 0.105 inch thick.
5. Pipes NPS 8 (DN 200) and Larger: Include wood or reinforced calcium-silicate-insulation inserts of length at least as long as protective shield.
6. Thermal-Hanger Shields: Install with insulation same thickness as piping insulation.

3.3 INSTALLATION OF EQUIPMENT SUPPORTS

A. Fabricate structural-steel stands to suspend equipment from structure overhead or to support equipment above floor.

B. Grouting: Place grout under supports for equipment and make bearing surface smooth.

C. Provide lateral bracing, to prevent swaying, for equipment supports.

3.4 METAL FABRICATIONS

A. Cut, drill, and fit miscellaneous metal fabrications for trapeze pipe hangers.

B. Fit exposed connections together to form hairline joints. Field weld connections that cannot be shop welded because of shipping size limitations.

C. Field Welding: Comply with AWS D1.1/D1.1M procedures for shielded, metal arc welding; appearance and quality of welds; and methods used in correcting welding work; and with the following:

1. Use materials and methods that minimize distortion and develop strength and corrosion resistance of base metals.
2. Obtain fusion without undercut or overlap.
3. Remove welding flux immediately.
4. Finish welds at exposed connections so no roughness shows after finishing and so contours of welded surfaces match adjacent contours.

3.5 ADJUSTING

A. Hanger Adjustments: Adjust hangers to distribute loads equally on attachments and to achieve indicated slope of pipe.

B. Trim excess length of continuous-thread hanger and support rods to 1-1/2 inches.

3.6 PAINTING

A. Touchup:

1. Clean field welds and abraded areas of shop paint. Paint exposed areas immediately after erecting hangers and supports. Use same materials as used for shop painting. Comply with SSPC-PA 1 requirements for touching up field-painted surfaces.
   a. Apply paint by brush or spray to provide a minimum dry film thickness of 2.0 mils.
2. Galvanized Surfaces: Clean welds, bolted connections, and abraded areas and apply galvanizing-repair paint to comply with ASTM A780/A780M.

3.7 HANGER AND SUPPORT SCHEDULE

A. Specific hanger and support requirements are in Sections specifying piping systems and equipment.

B. Comply with MSS SP-58 for pipe-hanger selections and applications that are not specified in piping system Sections.

C. Use hangers and supports with galvanized metallic coatings for piping and equipment that will not have field-applied finish.

D. Use nonmetallic coatings on attachments for electrolytic protection where attachments are in direct contact with copper tubing.

E. Use carbon-steel pipe hangers and supports and attachments for general service applications.

F. Use copper-plated pipe hangers and copper attachments for copper piping and tubing.

G. Use padded hangers for piping that is subject to scratching.

H. Use thermal-hanger shield inserts for insulated piping and tubing.

I. Horizontal-Piping Hangers and Supports: Unless otherwise indicated and except as specified in piping system Sections, install the following types:

1. Adjustable, Steel Clevis Hangers (MSS Type 1): For suspension of noninsulated or insulated, stationary pipes NPS 1/2 to NPS 30.
2. Yoke-Type Pipe Clamps (MSS Type 2): For suspension of up to 1050 deg F, pipes NPS 4 to NPS 24, requiring up to 4 inches of insulation.
3. Carbon- or Alloy-Steel, Double-Bolt Pipe Clamps (MSS Type 3): For suspension of pipes NPS 3/4 to NPS 36, requiring clamp flexibility and up to 4 inches of insulation.
4. Steel Pipe Clamps (MSS Type 4): For suspension of cold and hot pipes NPS 1/2 to NPS 24 if little or no insulation is required.
5. Pipe Hangers (MSS Type 5): For suspension of pipes NPS 1/2 to NPS 4, to allow off-center closure for hanger installation before pipe erection.
6. Adjustable, Swivel Split- or Solid-Ring Hangers (MSS Type 6): For suspension of noninsulated, stationary pipes NPS 3/4 to NPS 8.
7. Adjustable, Steel Band Hangers (MSS Type 7): For suspension of noninsulated, stationary pipes NPS 1/2 to NPS 8.

8. Adjustable Band Hangers (MSS Type 9): For suspension of noninsulated, stationary pipes NPS 1/2 to NPS 8.
9. Adjustable, Swivel-Ring Band Hangers (MSS Type 10): For suspension of noninsulated, stationary pipes NPS 1/2 to NPS 8.
10. Split Pipe Ring with or without Turnbuckle Hangers (MSS Type 11): For suspension of noninsulated, stationary pipes NPS 3/8 to NPS 8.
11. Extension Hinged or Two-Bolt Split Pipe Clamps (MSS Type 12): For suspension of noninsulated, stationary pipes NPS 3/8 to NPS 3.
12. U-Bolts (MSS Type 24): For support of heavy pipes NPS 1/2 to NPS 30.
13. Clips (MSS Type 26): For support of insulated pipes not subject to expansion or contraction.
14. Pipe Saddle Supports (MSS Type 36): For support of pipes NPS 4 to NPS 36, with steel-pipe base stanchion support and cast-iron floor flange or carbon-steel plate.
15. Pipe Stanchion Saddles (MSS Type 37): For support of pipes NPS 4 to NPS 36, with steel-pipe base stanchion support and cast-iron floor flange or carbon-steel plate, and with U-bolt to retain pipe.
16. Adjustable Pipe Saddle Supports (MSS Type 38): For stanchion-type support for pipes NPS 2-1/2 to NPS 36 if vertical adjustment is required, with steel-pipe base stanchion support and cast-iron floor flange.
17. Single-Pipe Rolls (MSS Type 41): For suspension of pipes NPS 1 to NPS 30, from two rods if longitudinal movement caused by expansion and contraction might occur.
18. Adjustable Roller Hangers (MSS Type 43): For suspension of pipes NPS 2-1/2 to NPS 24, from single rod if horizontal movement caused by expansion and contraction might occur.
19. Complete Pipe Rolls (MSS Type 44): For support of pipes NPS 2 to NPS 42 if longitudinal movement caused by expansion and contraction might occur but vertical adjustment is unnecessary.
20. Pipe Roll and Plate Units (MSS Type 45): For support of pipes NPS 2 to NPS 24 if small horizontal movement caused by expansion and contraction might occur and vertical adjustment is unnecessary.
21. Adjustable Pipe Roll and Base Units (MSS Type 46): For support of pipes NPS 2 to NPS 30 if vertical and lateral adjustment during installation might be required in addition to expansion and contraction.

J. Vertical-Piping Clamps: Unless otherwise indicated and except as specified in piping system Sections, install the following types:
1. Extension Pipe or Riser Clamps (MSS Type 8): For support of pipe risers NPS 3/4 to NPS 24.
2. Carbon- or Alloy-Steel Riser Clamps (MSS Type 42): For support of pipe risers NPS 3/4 to NPS 24 if longer ends are required for riser clamps.

K. Hanger-Rod Attachments: Unless otherwise indicated and except as specified in piping system Sections, install the following types:
1. Steel Turnbuckles (MSS Type 13): For adjustment up to 6 inches for heavy loads.
2. Steel Clevises (MSS Type 14): For 120 to 450 deg F piping installations.
3. Swivel Turnbuckles (MSS Type 15): For use with MSS Type 11, split pipe rings.
4. Malleable-Iron Sockets (MSS Type 16): For attaching hanger rods to various types of building attachments.
5. Steel Weldless Eye Nuts (MSS Type 17): For 120 to 450 deg F piping installations.

L. Building Attachments: Unless otherwise indicated and except as specified in piping system Sections, install the following types:
1. Steel or Malleable Concrete Inserts (MSS Type 18): For upper attachment to suspend pipe hangers from concrete ceiling.
2. Top-Beam C-Clamps (MSS Type 19): For use under roof installations with bar-joist construction, to attach to top flange of structural shape.
3. Side-Beam or Channel Clamps (MSS Type 20): For attaching to bottom flange of beams, channels, or angles.
4. Center-Beam Clamps (MSS Type 21): For attaching to center of bottom flange of beams.
5. Welded Beam Attachments (MSS Type 22): For attaching to bottom of beams if loads are considerable and rod sizes are large.
6. C-Clamps (MSS Type 23): For structural shapes.

7. Top-Beam Clamps (MSS Type 25): For top of beams if hanger rod is required tangent to flange edge.
8. Side-Beam Clamps (MSS Type 27): For bottom of steel I-beams.
9. Steel-Beam Clamps with Eye Nuts (MSS Type 28): For attaching to bottom of steel I-beams for heavy loads.
10. Linked-Steel Clamps with Eye Nuts (MSS Type 29): For attaching to bottom of steel I-beams for heavy loads, with link extensions.
11. Malleable-Beam Clamps with Extension Pieces (MSS Type 30): For attaching to structural steel.
12. Welded-Steel Brackets: For support of pipes from below or for suspending from above by using clip and rod. Use one of the following for indicated loads:
    a. Light (MSS Type 31): 750 lb.
    b. Medium (MSS Type 32): 1500 lb.
    c. Heavy (MSS Type 33): 3000 lb.
13. Side-Beam Brackets (MSS Type 34): For sides of steel or wooden beams.
14. Plate Lugs (MSS Type 57): For attaching to steel beams if flexibility at beam is required.
15. Horizontal Travelers (MSS Type 58): For supporting piping systems subject to linear horizontal movement where headroom is limited.

M. Saddles and Shields: Unless otherwise indicated and except as specified in piping system Sections, install the following types:
1. Steel-Pipe-Covering Protection Saddles (MSS Type 39): To fill interior voids with insulation that matches adjoining insulation.
2. Protection Shields (MSS Type 40): Of length recommended in writing by manufacturer to prevent crushing insulation.
3. Thermal-Hanger Shield Inserts: For supporting insulated pipe.

N. Spring Hangers and Supports: Unless otherwise indicated and except as specified in piping system Sections, install the following types:
1. Restraint-Control Devices (MSS Type 47): Where indicated to control piping movement.
2. Spring Cushions (MSS Type 48): For light loads if vertical movement does not exceed 1-1/4 inches.
3. Spring-Cushion Roll Hangers (MSS Type 49): For equipping Type 41, roll hanger with springs.
4. Spring Sway Braces (MSS Type 50): To retard sway, shock, vibration, or thermal expansion in piping systems.
5. Variable-Spring Hangers (MSS Type 51): Preset to indicated load and limit variability factor to 25 percent to allow expansion and contraction of piping system from hanger.
6. Variable-Spring Base Supports (MSS Type 52): Preset to indicated load and limit variability factor to 25 percent to allow expansion and contraction of piping system from base support.
7. Variable-Spring Trapeze Hangers (MSS Type 53): Preset to indicated load and limit variability factor to 25 percent to allow expansion and contraction of piping system from trapeze support.
8. Constant Supports: For critical piping stress and if necessary to avoid transfer of stress from one support to another support, critical terminal, or connected equipment. Include auxiliary stops for erection, hydrostatic test, and load-adjustment capability. These supports include the following types:
    a. Horizontal (MSS Type 54): Mounted horizontally.
    b. Vertical (MSS Type 55): Mounted vertically.
    c. Trapeze (MSS Type 56): Two vertical-type supports and one trapeze member.

O. Comply with MSS SP-58 for trapeze pipe-hanger selections and applications that are not specified in piping system Sections.

P. Comply with MFMA-103 for metal framing system selections and applications that are not specified in piping system Sections.

Q. Use mechanical-expansion anchors instead of building attachments where required in concrete construction.

END OF SECTION 230529

SECTION 230533 - HEAT TRACING FOR HVAC PIPING

PART 1 GENERAL

1.1 SUMMARY

A. Section includes heat tracing for freeze prevention of HVAC piping with self-regulating, parallel-resistance, electric heating cables:

1.2 ACTION SUBMITTALS

A. Product Data: For each type of product.
   1. Include rated capacities, operating characteristics, and furnished specialties and accessories.
   2. Schedule heating capacity, length of cable, spacing, and electrical power requirement for each electric heating cable required.
B. Shop Drawings: For electric heating cable.
   1. Include plans, elevations, sections, and attachment details.
   2. Include diagrams for power, signal, and control wiring.

1.3 INFORMATIONAL SUBMITTALS

A. Field quality-control reports.
B. Sample warranties.

1.4 CLOSEOUT SUBMITTALS

A. Operation and Maintenance Data: For electric heating cables and controls to include in operation and maintenance manuals.

1.5 WARRANTY

A. Special Warranty: Manufacturer agrees to repair or replace electric heating cable that fails in materials or workmanship within specified warranty period.
   1. Warranty Period: Five years from date of Substantial Completion.

PART 2 PRODUCTS

2.1 SELF-REGULATING, PARALLEL-RESISTANCE HEATING CABLES

A. Source Limitations: Obtain all heat tracing from one manufacturer.
B. Standard: IEEE 515.1.
C. Heating Element: Pair of parallel No. 18 AWG, stranded copper bus wires embedded in crosslinked conductive polymer core, which varies heat output in response to temperature along its length.
D. Electrical Insulating Jacket: Flame-retardant polyolefin.
E. Grounding Cover: Copper braid.
F. Cable Cover: Stainless steel braid.
G. Terminate with waterproof, factory-assembled, nonheating leads with connectors at one end, and seal the opposite end watertight. Cable is to be capable of crossing over itself once without overheating.
H. Maximum Operating Temperature (Power On): 150 deg F.
I. Maximum Exposure Temperature (Power Off): 185 deg F.
J. Electrical Components, Devices, and Accessories: Listed and labeled as defined in NFPA 70, by a qualified testing agency, and marked for intended location and application.
K. Capacities and Characteristics:
   1. Maximum Heat Output: 3 W/ft..
   2. Electrical Characteristics for Single-Circuit Connection:

a. Volts: 120V.
b. Phase: 1.
c. Hertz: 60 Hz.

2.2 CONTROLS

A. Pipe-Mounted Thermostats for Freeze Protection:
1. Remote bulb temperature-control unit with adjustable range from 30 to 50 deg F.
2. Snap action; open-on-rise, single-pole switch with minimum current rating adequate for connected cable.
3. Remote temperature-sensing bulb on capillary, resistance temperature device, or thermistor for directly sensing ambient air or pipe-wall temperature.
4. Corrosion-resistant, waterproof control enclosure.

B. Control Panel:
1. Microprocessor-based control with manual on, automatic, and standby/reset switch.
2. Remote temperature sensors sense outside air temperature; programmable to energize the cable when temperature falls below 34 to 44 deg F.
3. Corrosion-proof and waterproof enclosure suitable for outdoor mounting, for controls and precipitation and temperature sensors.
4. Minimum 30 A contactor to energize cable or close other contactors.
5. Ground-fault protection.
6. Single-point control of heat tracing for freeze protection.
7. Provide communication ports with contacts, RS485, or Ethernet interface for remote monitoring and alarm by central HVAC-control system. Coordinate type of connection ports with Section 230923 "Direct Digital Control (DDC) System for HVAC."

2.3 ACCESSORIES

A. Cable Installation Accessories: Fiberglass tape, heat-conductive putty, cable ties, silicone end seals and splice kits, and installation clips all furnished by manufacturer, or as recommended in writing by manufacturer.

B. Warning Labels: See Section 230553 "Identification for HVAC Piping and Equipment."

C. Warning Tape: Continuously printed "Electrical Tracing"; vinyl, at least 3 mils thick, and with pressure-sensitive, permanent, waterproof, self-adhesive back.
1. Width for Markers on Pipes with OD, Including Insulation, Less Than 6 Inches: 3/4 inch minimum.
2. Width for Markers on Pipes with OD, Including Insulation, 6 Inches or Larger: 1-1/2 inches minimum.

PART 3 EXECUTION

3.1 EXAMINATION

A. Examine surfaces and substrates to receive electric heating cables for compliance with requirements for installation tolerances and other conditions affecting performance.
1. Ensure surfaces and pipes in contact with electric heating cables are free of burrs and sharp protrusions.

B. Proceed with installation only after unsatisfactory conditions have been corrected.

3.2 INSTALLATION

A. Install electric heating cable at locations indicated and in accordance with NFPA 70.

B. Install electric heating cable across expansion, construction, and control joints in accordance with manufacturer's written instructions; use cable-protection conduit and slack cable to allow movement without damage to cable.

C. Install electric heating cables after piping has been tested and before insulation is installed.

D. Install electric heating cables in accordance with IEEE 515.1.

E. Install insulation over piping with electric cables in accordance with Section 230719 "HVAC Piping Insulation."
F. Install warning tape on piping insulation where piping is equipped with electric heating cables.
G. Set field-adjustable switches and circuit-breaker trip ranges.
H. Install temperature-control units in an accessible location and in accordance with manufacturer's written instructions. Locate sensing bulbs to sense outside air temperature in a location where it will not be affected by direct sunlight or other heat sources.
I. Install control panels and distribution panels where indicated and in accordance with manufacturer's written instructions.
J. Install outside air and pipe temperature sensors.

3.3 ELECTRICAL CONNECTIONS

A. Ground equipment in accordance with Section 260526 "Grounding and Bonding for Electrical Systems."
B. Connect wiring in accordance with Section 260519 "Low-Voltage Electrical Power Conductors and Cables."
C. Connect temperature-control unit to interrupt power supply to electric heating cable when outside air is above set point.
D. Connect remote electronic temperature sensors.

3.4 FIELD QUALITY CONTROL

A. Testing Agency: Engage a qualified testing agency to perform tests and inspections.
B. Manufacturer's Field Service: Engage a factory-authorized service representative to test and inspect components, assemblies, and equipment installations, including connections.
C. Perform the following tests and inspections with the assistance of a factory-authorized service representative:
    1. Perform tests after cable installation but before application of coverings, such as insulation, wall or ceiling construction, or concrete.
    2. Test cables for electrical continuity and insulation integrity before energizing.
    3. Test cables to verify rating and power input. Energize and measure voltage and current simultaneously.
D. Repeat tests for continuity, insulation resistance, and input power after applying thermal insulation on pipe-mounted cables.
E. Cables will be considered defective if they do not pass tests and inspections.
F. Prepare test and inspection reports.

3.5 PROTECTION

A. Protect installed heating cables, including nonheating leads, from damage.
B. Remove and replace damaged heat-tracing cables.

END OF SECTION 230533

SECTION 230548.13 - VIBRATION CONTROLS FOR HVAC

PART 1 GENERAL

1.1 SUMMARY

A. Section Includes:
1. Elastomeric isolation pads.
2. Elastomeric isolation mounts.
3. Restrained elastomeric isolation mounts.
4. Open-spring isolators.
5. Housed-spring isolators.
6. Restrained-spring isolators.
7. Housed-restrained-spring isolators.
8. Pipe-riser resilient support.
9. Resilient pipe guides.
10. Air-spring isolators.
11. Restrained-air-spring isolators.
12. Elastomeric hangers.
13. Spring hangers.
14. Snubbers.
15. Restraints - rigid type.
16. Restraints - cable type.
17. Restraint accessories.
18. Post-installed concrete anchors.
19. Concrete inserts.
20. Vibration isolation equipment bases.
21. Restrained isolation roof-curb rails.

B. Related Requirements:
1. Section 210548.13 "Vibration Controls for Fire-Suppression Piping and Equipment" for devices for fire-suppression equipment and systems.
2. Section 220548.13 "Vibration Controls for Plumbing Piping and Equipment" for devices for plumbing equipment and systems.

1.2 DEFINITIONS

A. IBC: International Building Code.

B. OSHPD: Office of Statewide Health Planning and Development (for the State of California owned and regulated medical facilities).

1.3 ACTION SUBMITTALS

A. Product Data: For each type of product.
1. Include rated load, rated deflection, and overload capacity for each vibration isolation device.
2. Include load rating for each wind-force-restraint fitting and assembly.
3. Illustrate and indicate style, material, strength, fastening provision, and finish for each type and size of vibration isolation device and wind-force-restraint component.
4. Annotate to indicate application of each product submitted and compliance with requirements.
5. Interlocking Snubbers: Include ratings for horizontal, vertical, and combined loads.

B. Shop Drawings:
1. Detail fabrication and assembly of equipment bases.
2. Vibration Isolation Base Details: Detail fabrication including anchorages and attachments to structure and to supported equipment. Include adjustable motor bases, rails, and frames for equipment mounting.

C. Delegated-Design Submittal:

1. For each wind-load protection device that is required by this Section or is indicated on Drawings, submit the following:

   a. Vibration Isolator and Wind-Load-Restraint Selection: Select vibration isolators, wind-load restraints, and vibration isolation bases complying with performance requirements, design criteria, and analysis data.

   b. Riser Supports: Include riser diagrams and calculations showing anticipated expansion and contraction at each support point, initial and final loads on building structure, and spring deflection changes. Include certification by professional engineer that riser system was examined for excessive stress and that none exists.

   c. Concrete Anchors and Inserts: Include calculations showing anticipated wind loads.

   d. Wind-Load Design Calculations: Submit all static and dynamic loading calculations prepared under "Wind-Load Design Calculations" Paragraph in "Performance Requirements" Article.

   e. Qualified Professional Engineer: All designated-design submittals for wind-restraint calculations are to be signed and sealed by qualified professional engineer responsible for their preparation.

2. Wind-Restraint Detail Drawing:

   a. Design Analysis: To support selection and arrangement of wind restraints. Include calculations of combined tensile and shear loads.

   b. Details: Indicate fabrication and arrangement. Detail attachments of restraints to restrained items and to the structure. Show attachment locations, methods, and spacings. Identify components, list their strengths, and indicate directions and values of forces transmitted to the structure during wind events. Indicate association with vibration isolation devices.

   c. Coordinate vibration isolation details with wind-restraint details required for equipment mounted outdoors. Comply also with requirements in other Sections for equipment mounted outdoors.

3. All delegated-design submittals for wind-restraint detail Drawings are to be signed and sealed by qualified professional engineer responsible for their preparation.

4. Product Listing, Preapproval, and Evaluation Documentation: By an evaluation service member of ICC-ES, showing maximum ratings of restraint items and basis for approval (tests or calculations).

5. Design Calculations for Vibration Isolation Devices: Calculate static and dynamic loading due to equipment weight and operating forces required to select proper vibration isolators, and to design vibration isolation bases.

6. Riser Supports: Include riser diagrams and calculations showing anticipated expansion and contraction at each support point, initial and final loads on building structure, and spring deflection changes. Include certification that riser system was examined for excessive stress and that none exists.

1.4 INFORMATIONAL SUBMITTALS

A. Coordination Drawings: Show coordination of vibration isolation device installation for HVAC piping and equipment with other systems and equipment in the vicinity, including other supports and restraints.

B. Qualification Data: For testing agency.

C. Welding certificates.

D. Air-Spring Mounting System Performance Certification: Include natural frequency, load, and damping test data performed by an independent agency.

E. Field quality-control reports.

F. Wind-Force Performance Certification: Provide special certification for HVAC components subject to high wind exposure and impact damage and designated on Drawings or in the Specifications to require wind-force performance certification.

1. Provide equipment manufacturer's written certification for each designated HVAC device, stating that it will remain in place and operable following the design wind event and comply with all requirements of authorities having jurisdiction.

2. Provide manufacturer's written certification for each designated louver, damper, or similar device, stating that it will remain in place and protect opening from penetration of windborne debris and comply with all requirements of authorities having jurisdiction.

3. Certification must be based on ICC-ES or similar nationally recognized testing standard procedures acceptable to authorities having jurisdiction.

4. The following HVAC systems and components require special certification for high wind performance. Written special certification of resistance to the effects of high wind force and impact damage must be provided by manufacturer:

1.5 CLOSEOUT SUBMITTALS

A. Operation and Maintenance Data: For air-spring mounts to include in operation and maintenance manuals.

1.6 QUALITY ASSURANCE

A. Testing Agency Qualifications: An independent agency, with the experience and capability to conduct testing indicated, be an NRTL as defined by OSHA in 29 CFR 1910.7 and be acceptable to authorities having jurisdiction.
B. Welding Qualifications: Qualify procedures and personnel in accordance with AWS D1.1/D1.1M, "Structural Welding Code - Steel."
C. Wind-Load-Restraint Device Load Ratings: Devices to be tested and rated in accordance with applicable code requirements and authorities having jurisdiction. Devices to be listed by a nationally recognized third party that requires periodic follow-up inspections and has a listing directory available to the public. Provide third-party listing by one or more of the following: ICC-ES product listing.

PART 2 PRODUCTS

2.1 PERFORMANCE REQUIREMENTS

A. Delegated Design: Engage a qualified professional engineer, as defined in Section 014000 "Quality Requirements," to design system.
   1. Wind-Load Performance: Equipment shall withstand the effects of high wind events determined in accordance with ASCE/SEI 7-05.
B. Wind-Load Design Calculations:
   1. Perform calculations to obtain force information necessary to properly select wind-load-restraint devices, fasteners, and anchorage. Perform calculations using methods acceptable to applicable code authorities and as presented in ASCE/SEI 7-. Where "ASCE/SEI 7" is used throughout this Section, it is to be understood that the edition referred to in this subparagraph is intended as referenced throughout the Section Text unless otherwise noted.
      a. Factors indicated below that are specific to individual pieces of equipment must be obtained by Contractor and must be included in individual component submittal packages.
      b. Coordinate design wind-load calculations with vibration isolation requirements. Comply with requirements in other Sections in addition to those in this Section for equipment mounted outdoors.
   2. Design wind pressure "p" for external sidewall-mounted equipment such as louvers is to be calculated by Delegated-Design Contractor using methods in ASCE/SEI 7-16, Ch. 30. Perform calculations in accordance with one of the following, as appropriate:
      a. PART 1: Low-Rise Buildings.
      b. PART 2: Low-Rise Buildings (Simplified).
      c. PART 3: Buildings with "h" less than 60 feet.
      d. PART 4: Buildings with "h" greater than 60 feet and less than 160 feet.
      e. PART 5: Open Buildings.
   3. Design wind pressure "p" for rooftop equipment is to be calculated by Delegated-Design Contractor using methods in ASCE/SEI 7-16, Ch. 30, PART 6: Building Appurtenances and Rooftop Structures and Equipment.
      a. Risk Category: .
      b. h = Mean Roof Height: ???Insert value???.
      c. V = Basic Wind Speed: ???Insert value???.
      d. Kd = Wind Directionality Factor: ???Insert factor???.
      e. Exposure Category: .
      f. Kzt = Topographic Factor: ???Insert factor???.

g. Ke = Ground Elevation Factor: ???Insert factor???.
h. Kz = Velocity Pressure Exposure Coefficient (Evaluated at Height z): ???Insert coefficient???.
i. Kh = Velocity Pressure Exposure Coefficient (Evaluated at Height h): ???Insert coefficient???.
j. qz = Velocity Pressure: Value calculated by delegated wind-load design Contractor using methods detailed in ASCE/SEI 7-16 Section 26.10.1 or other source approved by authorities having jurisdiction.
k. qh = Velocity Pressure: Value calculated by delegated wind-load design Contractor using methods detailed in ASCE/SEI 7-16 Section 26.10.1 or other source approved by authorities having jurisdiction.
l. G = Gust-Effect Factor: ???Insert factor???.
m. Enclosure Classification: ???Insert classification???.
n. GCpi = Internal Pressure Coefficient: ???Insert coefficient???.

4. Design wind pressure "p" for external sidewall-mounted equipment such as louvers are to be calculated by Delegated-Design Contractor using methods in ASCE/SEI 7-10, Ch. 30. Perform calculations in accordance with one of the following, as appropriate:
   a. PART 1: Low-Rise Buildings.
   b. PART 2: Low-Rise Buildings (Simplified).
   c. PART 3: Buildings with "h" greater than 60 feet.
   d. PART 4: Buildings with "h" less than 160 feet.
   e. PART 5: Open Buildings.
5. Design wind pressure "p" for rooftop equipment is to be calculated by Delegated-Design Contractor using methods in ASCE/SEI 7-10, Ch. 30, PART 6: Building Appurtenances and Rooftop Structures and Equipment.
   a. Risk Category: .
   b. h = Mean roof height: ???Insert value???.
   c. V = Basic Wind Speed: ???Insert value???.
   d. Kd = Wind Directionality Factor: ???Insert factor???.
   e. Exposure Category: .
   f. Kzt = Topographic Factor: ???Insert factor???.
   g. Kz = Velocity Pressure Exposure Coefficient (Evaluated at Height z): ???Insert coefficient???.
   h. Kh = Velocity Pressure Exposure Coefficient (Evaluated at Height h): ???Insert coefficient???.
   i. qz = Velocity Pressure at Height z: Value calculated by delegated wind-load design Contractor using methods detailed in ASCE/SEI 7-10 Section 26.10.1 or other source approved by authorities having jurisdiction.
   j. qh = Velocity Pressure at Height h: Value calculated by delegated wind-load design Contractor using methods detailed in ASCE/SEI 7-10 Section 26.10.1 or other source approved by authorities having jurisdiction.
   k. G = Gust-Effect Factor: ???Insert factor???.
   l. Enclosure Classification: ???Insert classification???.
   m. GCpi = Internal Pressure Coefficient: ???Insert coefficient???.
6. Design wind force "F" for rooftop equipment and external sidewall-mounted equipment such as louvers is to be calculated by Delegated-Design Contractor using methods in ASCE/SEI 7-05, Ch. 6.
   a. I = Importance Factor: ???Insert factor???.
   b. h = Mean Roof Height: ???Insert value???.
   c. V = Basic Wind Speed: ???Insert value???.
   d. Kd = Wind Directionality Factor: ???Insert factor???.
   e. Exposure Category: .
   f. Kzt = Topographic Factor: ???Insert factor???.
   g. Kz = Velocity Pressure Exposure Coefficient (Evaluated at Height z): ???Insert coefficient???.

h. Kh = Velocity Pressure Exposure Coefficient (Evaluated at Height h): ???Insert coefficient???.

i. qz = Velocity Pressure at Height z: Value calculated by delegated wind-load design Contractor using methods detailed in ASCE/SEI 7-05 Section 6.5.10 or other source approved by authorities having jurisdiction.

j. qh = Velocity Pressure at Roof Height h: Value calculated by delegated wind-load design Contractor using methods detailed in ASCE/SEI 7-05 Section 6.5.10 or other source approved by authorities having jurisdiction.

k. G = Gust-Effect Factor: ???Insert factor???.

l. GCpi = Internal Pressure Coefficient: ???Insert coefficient???.

m. GCp = External Pressure Coefficient: ???Insert coefficient???.

n. Cf = Force Coefficient: Value determined by delegated wind-load design Contractor from ASCE/SEI 7-05, Figures 6-21 through 6-23 or other source approved by authorities having jurisdiction.

o. Af = Projected Area Normal to the Wind: Except where "Cf" is specified for the actual surface area. Value determined by delegated wind-load design Contractor from equipment submittal or manufacturer.

C. Consequential Damage: Provide additional restraints for suspended HVAC components or anchorage of floor-, roof-, or wall-mounted HVAC components as indicated in so that failure of a non-essential or essential HVAC component will not cause the failure of any other essential architectural, mechanical, or electrical building component.

D. Fire/Smoke Resistance: All components that are not constructed of ferrous metals must have a maximum flame-spread index of 25 and maximum smoke-developed index of 50 when tested by an NRTL in accordance with ASTM E84 or UL 723, and be so labeled.

E. Component Supports:

1. Load ratings, features, and applications of all reinforcement components must be based on testing standards of a nationally recognized testing agency.

2.2 ELASTOMERIC ISOLATION PADS

A. Elastomeric Isolation Pads: ???Insert drawing designation???.

1. Fabrication: Single or multiple layers of sufficient durometer stiffness for uniform loading over pad area.
2. Size: Factory or field cut to match requirements of supported equipment.
3. Minimum deflection as indicated on Drawings.
4. Pad Material: Oil- and water-resistant rubber.
5. Infused nonwoven cotton or synthetic fibers.
6. Load-bearing metal plates adhered to pads.
7. Sandwich-Core Material: ???Insert compound???.
   a. Infused nonwoven cotton or synthetic fibers.

2.3 ELASTOMERIC ISOLATION MOUNTS

A. Elastomeric Isolation Mounts: ???Insert drawing designation???.

1. Mounting Plates:
   a. Top Plate: Encapsulated steel load transfer top plates, factory drilled and threaded.
   b. Baseplate: Encapsulated steel bottom plates with holes provided for anchoring to support structure.
2. Minimum deflection as indicated on Drawings.
3. Elastomeric Material: Molded, oil-resistant rubber, neoprene, or other elastomeric material.

2.4 RESTRAINED ELASTOMERIC ISOLATION MOUNTS

A. Restrained Elastomeric Isolation Mounts: ???Insert drawing designation???.

1. Description: All-directional isolator with restraints containing two separate and opposing elastomeric elements that prevent central threaded element and attachment hardware from contacting the housing during normal operation.

a. Housing: Cast-ductile iron or welded steel.
b. Elastomeric Material: Molded, oil-resistant rubber, neoprene, or other elastomeric material.
2. Minimum deflection as indicated on Drawings.

2.5 OPEN-SPRING ISOLATORS

A. Freestanding, Laterally Stable, Open-Spring Isolators: ???Insert drawing designation???.
1. Outside Spring Diameter: Not less than 80 percent of the compressed height of the spring at rated load.
2. Minimum Additional Travel: 50 percent of the required deflection at rated load.
3. Lateral Stiffness: More than 80 percent of rated vertical stiffness.
4. Overload Capacity: Support 200 percent of rated load, fully compressed, without deformation or failure.
5. Baseplates: Factory-drilled steel plate for bolting to structure with an elastomeric isolator pad attached to the underside. Baseplates shall limit floor load to 500 psi.
6. Top Plate and Adjustment Bolt: Threaded top plate with adjustment bolt and cap screw to fasten and level equipment.
7. Minimum deflection as indicated on Drawings.

2.6 HOUSED-SPRING ISOLATORS

A. Freestanding, Laterally Stable, Open-Spring Isolators in Two-Part Telescoping Housing: ???Insert drawing designation???.
1. Outside Spring Diameter: Not less than 80 percent of the compressed height of the spring at rated load.
2. Minimum Additional Travel: 50 percent of the required deflection at rated load.
3. Lateral Stiffness: More than 80 percent of rated vertical stiffness.
4. Overload Capacity: Support 200 percent of rated load, fully compressed, without deformation or failure.
5. Minimum deflection as indicated on Drawings.
6. Two-Part Telescoping Housing: A steel top and bottom frame separated by an elastomeric material and enclosing the spring isolators.
a. Drilled base housing for bolting to structure with an elastomeric isolator pad attached to the underside. Bases shall limit floor load to 500 psi.
b. Top housing with

2.7 RESTRAINED-SPRING ISOLATORS

A. Freestanding, Laterally Stable, Open-Spring Isolators with Vertical-Limit Stop Restraint: ???Insert drawing designation???.
1. Housing: Steel housing with vertical-limit stops to prevent spring extension due to weight being removed.
a. Base with holes for bolting to structure with an elastomeric isolator pad attached to the underside. Bases shall limit floor load to 500 psi.
b. Top plate with
c. Internal leveling bolt that acts as blocking during installation.
2. Restraint: Limit stop as required for equipment and authorities having jurisdiction.
3. Outside Spring Diameter: Not less than 80 percent of the compressed height of the spring at rated load.
4. Minimum Additional Travel: 50 percent of the required deflection at rated load.
5. Lateral Stiffness: More than 80 percent of rated vertical stiffness.
6. Overload Capacity: Support 200 percent of rated load, fully compressed, without deformation or failure.
7. Minimum deflection as indicated on Drawings.

2.8 HOUSED-RESTRAINED-SPRING ISOLATORS

A. Freestanding, Steel, Open-Spring Isolators with Vertical-Limit Stop Restraint in Two-Part Telescoping Housing: ???Insert drawing designation???.
   1. Two-Part Telescoping Housing: A steel top and bottom frame separated by an elastomeric material and enclosing the spring isolators. Housings are equipped with snubbers to limit vertical movement.
      a. Drilled base housing for bolting to structure with an elastomeric isolator pad attached to the underside. Bases shall limit floor load to 500 psi.
      b. Threaded top housing with adjustment bolt and cap screw to fasten and level equipment.
   2. Outside Spring Diameter: Not less than 80 percent of the compressed height of the spring at rated load.
   3. Minimum Additional Travel: 50 percent of the required deflection at rated load.
   4. Lateral Stiffness: More than 80 percent of rated vertical stiffness.
   5. Overload Capacity: Support 200 percent of rated load, fully compressed, without deformation or failure.
   6. Minimum deflection as indicated on Drawings.

2.9 PIPE-RISER RESILIENT SUPPORT

A. All-Directional, Acoustical Pipe Anchor Consisting of Two Steel Tubes Separated by a Minimum 1/2-inch-Thick Neoprene: ???Insert drawing designation???.
   1. Vertical-Limit Stops: Steel and neoprene vertical-limit stops arranged to prevent vertical travel in both directions.
   2. Maximum Load Per Support: 500 psi on isolation material providing equal isolation in all directions.
   3. Minimum deflection as indicated on Drawings.

2.10 RESILIENT PIPE GUIDES

A. Telescopic Arrangement of Two Steel Tubes or Post and Sleeve Arrangement Separated by a Minimum 1/2-inch-Thick Neoprene: ???Insert drawing designation???.
   1. Factory-Set Height Guide with Shear Pin: Shear pin shall be removable and reinsertable to allow for selection of pipe movement. Guides shall be capable of motion to meet location requirements.

2.11 AIR-SPRING ISOLATORS

A. Freestanding, Single or Multiple, Compressed-Air Bellows: ???Insert drawing designation???.
   1. Bellows Assembly: Upper and lower powder-coated steel sections connected by a replaceable, flexible, nylon-reinforced neoprene bellows or similar elastomeric material.
   2. Maximum Natural Frequency: 3 Hz.
   3. Operating Pressure Range: 25 to 100 psi.
   4. Burst Pressure: At least three times manufacturer's published maximum operating pressure.
   5. Minimum deflection as indicated on Drawings.
   6. Automatic leveling valve.

2.12 RESTRAINED-AIR-SPRING ISOLATORS

A. Freestanding, Single or Multiple, Compressed-Air Bellows with Vertical-Limit Stop Restraint: ???Insert drawing designation???.
   1. Housing: Steel housing with vertical-limit stops to prevent spring extension due to weight being removed.
      a. Base with holes for bolting to structure with an elastomeric isolator pad attached to the underside. Bases shall limit floor load to 500 psi.
      b. Top plate with
      c. Internal leveling bolt that acts as blocking during installation.
   2. Restraint: Limit stop as required for equipment and authorities having jurisdiction.
   3. Minimum deflection as indicated on Drawings.
   4. Minimum Additional Travel: 50 percent of the required deflection at rated load.

5. Lateral Stiffness: More than 80 percent of rated vertical stiffness.
6. Overload Capacity: Support 200 percent of rated load, fully compressed, without deformation or failure.
7. Bellows Assembly: Upper and lower powder-coated steel sections connected by a replaceable, flexible, nylon-reinforced neoprene bellows or similar elastomeric material.
8. Maximum Natural Frequency: 3 Hz.
9. Operating Pressure Range: 25 to 100 psi.
10. Burst Pressure: At least three times manufacturer's published maximum operating pressure.
11. Automatic leveling valve.

2.13 ELASTOMERIC HANGERS

A. Elastomeric Mount in a Steel Frame with Upper and Lower Steel Hanger Rods: ???Insert drawing designation???.
1. Frame: Steel, fabricated with a connection for an upper threaded hanger rod and an opening on the underside to allow for a maximum of 30 degrees of angular lower hanger-rod misalignment without binding or reducing isolation efficiency.
2. Damping Element: Molded, oil-resistant rubber, neoprene, or other elastomeric material with a projecting bushing for the underside opening preventing steel-to-steel contact.
3. Minimum deflection as indicated on Drawings.

2.14 SPRING HANGERS

A. Combination Coil-Spring and Elastomeric-Insert Hanger with Spring and Insert in Compression: ???Insert drawing designation???.
1. Frame: Steel, fabricated for connection to threaded hanger rods and to allow for a maximum of 30 degrees of angular hanger-rod misalignment without binding or reducing isolation efficiency.
2. Outside Spring Diameter: Not less than 80 percent of the compressed height of the spring at rated load.
3. Minimum Additional Travel: 50 percent of the required deflection at rated load.
4. Lateral Stiffness: More than 80 percent of rated vertical stiffness.
5. Minimum deflection as indicated on Drawings.
6. Overload Capacity: Support 200 percent of rated load, fully compressed, without deformation or failure.
7. Elastomeric Element: Molded, oil-resistant rubber or neoprene. Steel-washer-reinforced cup to support spring and bushing projecting through bottom of frame.
8. Adjustable Vertical Stop: Steel washer with neoprene washer "up-stop" on lower threaded rod.
9. Self-centering hanger rod cap to ensure concentricity between hanger rod and support spring coil.

2.15 SNUBBERS

A. Description: Factory fabricated using welded structural-steel shapes and plates, anchor bolts, and replaceable resilient isolation washers and bushings.
1. Post-Installed Concrete Anchor Bolts: Secure to concrete surface with post-installed concrete anchors. Anchors to be prequalified in accordance with ACI 355.2 testing and designated in accordance with
2. Preset Concrete Inserts: Prequalified in accordance with ICC-ES AC446 testing.
3. Anchors in Masonry: Design in accordance with TMS 402.
4. Resilient Isolation Washers and Bushings: Oil- and water-resistant neoprene.
5. Resilient Cushion: Maximum 1/4-inch air gap, and minimum 1/4 inch thick.

2.16 RESTRAINTS - RIGID TYPE

A. Description: Shop- or field-fabricated bracing assembly made of AISI S110-07-S1 slotted steel channels, ANSI/ASTM A53/A53M steel pipe as per NFPA 13, or other rigid steel brace member. Includes accessories for attachment to braced component at one end and to building structure at the other end and other matching components and with corrosion-resistant coating; rated in tension, compression, and torsion forces.

2.17 RESTRAINTS - CABLE TYPE

A. Restraint Cables: cables. End connections made of steel assemblies with thimbles, brackets, swivel, and bolts designed for restraining cable service; with fittings attached by means of poured socket, swaged socket, or mechanical (Flemish eye) loop.

B. Restraint cable assembly and cable fittings must comply with All cable fittings and complete cable assembly must maintain the minimum cable breaking force. U-shaped cable clips and wedge-type end fittings do not comply and are unacceptable.

2.18 RESTRAINT ACCESSORIES

A. Hanger-Rod Stiffener: to hanger rod.

B. Hinged and Swivel Brace Attachments: Multifunctional steel connectors for attaching hangers to

C. Bushings for Floor-Mounted Equipment Anchor Bolts: Neoprene bushings designed for rigid equipment mountings, and matched to type and size of anchor bolts and studs.

D. Bushing Assemblies for Wall-Mounted Equipment Anchorage: Assemblies of neoprene elements and steel sleeves designed for rigid equipment mountings, and matched to type and size of attachment devices used.

E. Resilient Isolation Washers and Bushings: One-piece, molded, oil- and water-resistant neoprene, with a flat washer face.

2.19 POST-INSTALLED CONCRETE ANCHORS

A. Mechanical Anchor Bolts:

1. Drilled-in and stud-wedge or female-wedge type in zinc-coated steel for interior applications and stainless steel for exterior applications. Select anchor bolts with strength for anchor and as tested according to ASTM E488/E488M.

B. Adhesive Anchor Bolts:

1. Drilled-in and capsule anchor system containing PVC or urethane methacrylate-based resin and accelerator, or injected polymer or hybrid mortar adhesive. Provide anchor bolts and hardware with zinc-coated steel for interior applications and stainless steel for exterior applications. Select anchor bolts with strength required for anchor and as tested according to ASTM E488/E488M.

C. Provide post-installed concrete anchors that have been prequalified for use in wind-load applications. Post-installed concrete anchors must comply with all requirements of

1. Prequalify post-installed anchors in concrete in accordance with ACI 355.2 or other approved qualification testing procedures.
2. Prequalify post-installed anchors in masonry in accordance with approved qualification procedures.

D. Expansion-type anchor bolts are not permitted for equipment in excess of 10 hp that is not vibration isolated.

1. Undercut expansion anchors are permitted.

2.20 CONCRETE INSERTS

A. Provide preset concrete inserts that are prequalified in accordance with ICC-ES AC466 testing.

B. Comply with ANSI/MSS SP-58.

2.21 VIBRATION ISOLATION EQUIPMENT BASES

A. Steel Rails: Factory-fabricated, welded, structural-steel rails.

1. Design Requirements: Lowest possible mounting height with not less than 1-inch clearance above the floor. Include equipment anchor bolts and auxiliary motor slide rails.
   a. Include supports for suction and discharge elbows for pumps.
2. Structural Steel: Steel shapes, plates, and bars complying with ASTM A36/A36M. Rails shall have shape to accommodate supported equipment.
3. Support Brackets: Factory-welded steel brackets on frame for outrigger isolation mountings and to provide for anchor bolts and equipment support.

B. Steel Bases: Factory-fabricated, welded, structural-steel bases and rails.

1. Design Requirements: Lowest possible mounting height with not less than 1-inch clearance above the floor. Include equipment anchor bolts and auxiliary motor slide bases or rails.

a. Include supports for suction and discharge elbows for pumps.

2. Structural Steel: Steel shapes, plates, and bars complying with ASTM A36/A36M. Bases shall have shape to accommodate supported equipment.

3. Support Brackets: Factory-welded steel brackets on frame for outrigger isolation mountings and to provide for anchor bolts and equipment support.

C. Concrete Inertia Base: , welded, structural-steel bases and rails ready for placement of cast-in-place concrete.

1. Design Requirements: Lowest possible mounting height with not less than 1-inch clearance above the floor. Include equipment anchor bolts and auxiliary motor slide bases or rails.

a. Include supports for suction and discharge elbows for pumps.

2. Structural Steel: Steel shapes, plates, and bars complying with ASTM A36/A36M. Bases shall have shape to accommodate supported equipment.

3. Support Brackets: Factory-welded steel brackets on frame for outrigger isolation mountings and to provide for anchor bolts and equipment support.

4. Fabrication: Fabricate steel templates to hold equipment anchor-bolt sleeves and anchors in place during placement of concrete. Obtain anchor-bolt templates from supported equipment manufacturer.

2.22 RESTRAINED ISOLATION ROOF-CURB RAILS

A. Description: Factory-assembled, fully enclosed, insulated, air- and watertight curb rail designed to resiliently support equipment.

B. Upper Frame: Shall provide continuous and captive support for equipment.

C. Lower Support Assembly: Shall be formed sheet metal section containing adjustable and removable steel springs that support upper frame. Lower support assembly shall have a means for attaching to building structure and a wood nailer for attaching roof materials and shall be insulated with a minimum of 2 inches of rigid glass-fiber insulation on inside of assembly.

1. Adjustable, restrained-spring isolators shall be mounted on elastomeric vibration isolation pads and shall have access ports, for level adjustment, with removable waterproof covers at all isolator locations. Isolators shall be located so they are accessible for adjustment at any time during the life of the installation without interfering with integrity of roof.

2. Minimum deflection as indicated on Drawings.

D. Water Seal: Galvanized sheet metal with EPDM seals at corners, attached to upper support frame, extending down past wood nailer of lower support assembly, and counterflashed over roof materials.

PART 3 EXECUTION

3.1 EXAMINATION

A. Examine areas and equipment to receive vibration isolation devices for compliance with requirements for installation tolerances and other conditions affecting performance of the Work.

B. Examine roughing-in of reinforcement and cast-in-place anchors to verify actual locations before installation.

C. Proceed with installation only after unsatisfactory conditions have been corrected.

3.2 APPLICATIONS

A. Multiple Pipe Supports: Secure pipes to trapeze member with clamps approved for application by

B. Hanger-Rod Stiffeners: Install hanger-rod stiffeners where indicated or scheduled on Drawings to receive them and where required to prevent buckling of hanger rods due to wind-load forces.

C. Strength of Support Assemblies: Where not indicated, select sizes of components so strength is adequate to carry static and wind force loads within specified loading limits.

3.3 INSTALLATION OF VIBRATION CONTROL DEVICES

A. Provide vibration control devices for systems and equipment where indicated in Equipment Schedules or Vibration-Control Device Schedules on Drawings, where Specifications indicate they are to be installed on specific equipment and systems, and where required by applicable codes.

B. Coordinate location of embedded connection hardware with supported equipment attachment and mounting points and with requirements for concrete reinforcement and formwork specified in Section 033000 "Cast-in-Place Concrete."

C. Installation of vibration isolators must not cause any change of position of equipment, piping, or ductwork resulting in stresses or misalignment.

D. Comply with requirements in Section 077200 "Roof Accessories" for installation of roof curbs, equipment supports, and roof penetrations.

E. Equipment Restraints:

1. Install snubbers on HVAC equipment mounted on vibration isolators. Locate snubbers as close as possible to vibration isolators and bolt to equipment base and supporting structure.
2. Install resilient bolt isolation washers on equipment anchor bolts where clearance between anchor and adjacent surface exceeds 0.125 inch.
3. Install wind-load-restraint devices using methods approved by that provides required submittals for component.

F. Piping Restraints:

1. Comply with requirements in MSS SP-127.
2. Space lateral supports a maximum of ???Insert dimension??? o.c., and longitudinal supports a maximum of ???Insert dimension??? o.c.
3. Brace a change of direction longer than 12 feet.

G. Install wind-load-restraint cables so they do not bend across edges of adjacent equipment or building structure.

H. Install wind-load-restraint devices using methods approved by that provides required submittals for component.

I. Install bushing assemblies for anchor bolts for floor-mounted equipment, arranged to provide resilient media between anchor bolt and mounting hole in concrete base.

J. Install bushing assemblies for mounting bolts for wall-mounted equipment, arranged to provide resilient media where equipment or equipment-mounting channels are attached to wall.

K. Attachment to Structure: If specific attachment is not indicated, anchor bracing to structure at flanges of beams, at upper truss chords of bar joists, or at concrete members.

L. Post-Installed Concrete Anchors:

1. Identify position of reinforcing steel and other embedded items prior to drilling holes for anchors. Do not damage existing reinforcing or embedded items during coring or drilling. Notify structural engineer if reinforcing steel or other embedded items are encountered during drilling. Locate and avoid prestressed tendons, electrical and telecommunications conduit, and gas lines.
2. Do not drill holes in concrete or masonry until concrete, mortar, or grout has achieved full design strength.
3. Wedge-Type Anchor Bolts: Protect threads from damage during anchor installation. Heavy-duty sleeve anchors shall be installed with sleeve fully engaged in the structural element to which anchor is to be fastened.
4. Adhesive-Type Anchor Bolts: Clean holes to remove loose material and drilling dust prior to installation of adhesive. Place adhesive in holes proceeding from the bottom of the hole and progressing toward the surface in such a manner as to avoid introduction of air pockets in the adhesive.
5. Set anchors to manufacturer's recommended torque, using a torque wrench.
6. Install zinc-coated steel anchors for interior and stainless steel anchors for exterior applications.

3.4 INSTALLATION OF AIR-SPRING ISOLATORS

A. Independent Isolator Installation:

1. Install automatic leveling valve into each air isolator.
2. Inflate each isolator to specified on Drawings.

B. Pressure-Regulated Isolator Installation:

1. Coordinate the constant pressure-regulated air supply to air springs with requirements for piping and connections specified in Section 221513 "General-Service Compressed-Air Piping."

2. Connect all pressure regulators to a single dry, filtered air supply.
3. Inflate isolators to specified on Drawings.

3.5 ACCOMMODATION OF DIFFERENTIAL MOTION

A. Provide flexible connections in piping systems where they cross structural joints and other point where differential movement may occur. Provide adequate flexibility to accommodate differential movement as determined in accordance with ASCE/SEI 7. Comply with requirements in Section 232113 "Hydronic Piping" and Section 232116 "Hydronic Piping Specialties" for piping flexible connections.

3.6 INSTALLATION OF VIBRATION ISOLATION EQUIPMENT BASES

A. Coordinate location of embedded connection hardware with supported equipment attachment and mounting points and with requirements for concrete reinforcement and formwork specified in Section 033000 "Cast-in-Place Concrete."
B. Coordinate dimensions of equipment bases with requirements of isolated equipment specified in this and other Sections. Where dimensions of base are indicated on Drawings, they may require adjustment to accommodate isolated equipment.

3.7 ADJUSTING

A. Adjust isolators after system is at operating weight.
B. Adjust limit stops on restrained-spring isolators to mount equipment at normal operating height. After equipment installation is complete, adjust limit stops so they are out of contact during normal operation.

3.8 FIELD QUALITY CONTROL

A. Testing Agency: a qualified testing agency to perform tests and inspections.
B. Manufacturer's Field Service: Engage a factory-authorized service representative to test and inspect components, assemblies, and equipment installations, including connections.
C. Perform tests and inspections.
D. Tests and Inspections:
1. Provide evidence of recent calibration of test equipment by a testing agency acceptable to authorities having jurisdiction.
2. Schedule test with Owner, through Architect, before connecting anchorage device to restrained component (unless postconnection testing has been approved), and with at least seven days' advance notice.
3. Obtain Architect's approval before transmitting test loads to structure. Provide temporary load-spreading members.
4. Test at least ???Insert number??? of each type and size of installed anchors and fasteners selected by Architect.
5. Test to 90 percent of rated proof load of device.
6. Measure isolator restraint clearance.
7. Measure isolator deflection.
8. Verify snubber minimum clearances.
9. Test and adjust restrained-air-spring isolator controls and safeties.
E. Remove and replace malfunctioning units and retest as specified above.
F. Prepare test and inspection reports.

END OF SECTION 230548.13

SECTION 230553 - IDENTIFICATION FOR HVAC PIPING AND EQUIPMENT

PART 1 GENERAL

1.1 SUMMARY

A. Section Includes:
1. Equipment labels.
2. Warning signs and labels.
3. Warning tape.
4. Pipe labels.
5. Duct labels.
6. Stencils.
7. Valve tags.
8. Warning tags.

1.2 ACTION SUBMITTALS

A. Product Data: For each type of product.
B. Samples: For color, letter style, and graphic representation required for each identification material and device.
C. Equipment-Label Schedule: Include a listing of all equipment to be labeled with the proposed content for each label.
D. Valve-numbering scheme.
E. Valve Schedules: Provide for each piping system. Include in operation and maintenance manuals.

PART 2 PRODUCTS

2.1 EQUIPMENT LABELS

A. Metal Labels for Equipment:
1. Material and Thickness: Brass, 0.032-inchminimum thickness, with predrilled or stamped holes for attachment hardware.
2. Letter and Background Color: As indicated for specific application under Part 3.
3. Minimum Label Size: Length and width vary for required label content, but not less than 2-1/2 by 3/4 inch.
4. Minimum Letter Size: 1/4 inch for name of units if viewing distance is less than 24 inches, 1/2 inch for viewing distances of up to 72 inches, and proportionately larger lettering for greater viewing distances. Include secondary lettering two-thirds to three-fourths the size of principal lettering.
5. Fasteners: Stainless steel rivets or self-tapping screws.
6. Adhesive: Contact-type permanent adhesive, compatible with label and with substrate.
B. Plastic Labels for Equipment:
1. Material and Thickness: Multilayer, multicolor, plastic labels for mechanical engraving, 1/16 inch thick, with predrilled holes for attachment hardware.
2. Letter and Background Color: As indicated for specific application under Part 3.
3. Maximum Temperature: Able to withstand temperatures of up to 160 deg F.
4. Minimum Label Size: Length and width vary for required label content, but not less than 2-1/2 by 3/4 inch.
5. Minimum Letter Size: 1/4 inch for name of units if viewing distance is less than 24 inches, 1/2 inch for viewing distances of up to 72 inches, and proportionately larger lettering for greater viewing distances. Include secondary lettering two-thirds to three-fourths the size of principal lettering.
6. Fasteners: Stainless steel rivets or self-tapping screws.
7. Adhesive: Contact-type permanent adhesive, compatible with label and with substrate.

C. Label Content: Include equipment's Drawing designation or unique equipment number, Drawing numbers where equipment is indicated (plans, details, and schedules), and the Specification Section number and title where equipment is specified.

2.2 WARNING SIGNS AND LABELS

A. Material and Thickness: Multilayer, multicolor, plastic labels for mechanical engraving, 1/16 inchthick, with predrilled holes for attachment hardware.
B. Letter and Background Color: As indicated for specific application under Part 3.
C. Maximum Temperature: Able to withstand temperatures of up to 160 deg F.
D. Minimum Label Size: Length and width vary for required label content, but not less than 2-1/2 by 3/4 inch.
E. Minimum Letter Size: 1/4 inch for name of units if viewing distance is less than 24 inches, 1/2 inch for viewing distances of up to 72 inches, and proportionately larger lettering for greater viewing distances. Include secondary lettering two-thirds to three-fourths the size of principal lettering.
F. Fasteners: Stainless steel rivets or self-taping screws.
G. Adhesive: Contact-type permanent adhesive, compatible with label and with substrate.
H. Arc-Flash Warning Signs: Provide arc-flash warning signs in locations and with content in accordance with requirements of OSHA and NFPA70E and other applicable codes and standards.
I. Label Content: Include caution and warning information plus emergency notification instructions.

2.3 WARNING TAPE

A. Material: Vinyl.
B. Minimum Thickness: 0.005 inch.
C. Letter, Pattern, and Background Color: As indicated for specific application under Part 3.
D. Waterproof Adhesive Backing: Suitable for indoor or outdoor use.
E. Maximum Temperature: 160 deg F.
F. Minimum Width: 4inches.

2.4 PIPE LABELS

A. General Requirements for Manufactured Pipe Labels: Preprinted, color coded, with lettering indicating service and showing flow direction in accordance with ASME A13.1.
B. Letter and Background Color: As indicated for specific application under Part 3.
C. Pretensioned Pipe Labels: Precoiled, semirigid plastic formed to partially cover] circumference of pipe and to attach to pipe without fasteners or adhesive.
D. Self-Adhesive Pipe Labels: Printed plastic with contact-type, permanent-adhesive backing.
E. Pipe Label Contents: Include identification of piping service using same designations or abbreviations as used on Drawings. Also include:
   1. Pipe size.
   2. Flow-Direction Arrows: Include flow-direction arrows on main distribution piping. Arrows may be either integral with label or applied separately.
   3. Lettering Size: At least 1/2 inch for viewing distances of up to 72 inches and proportionately larger lettering for greater viewing distances.

2.5 DUCT LABELS

A. Material and Thickness: Multilayer, multicolor, plastic labels for mechanical engraving, 1/8 inch thick, and having predrilled holes for attachment hardware.
B. Letter and Background Color: As indicated for specific application under Part 3.
C. Maximum Temperature: Able to withstand temperatures up to 160 deg F.
D. Minimum Label Size: Length and width vary for required label content, but not less than 2-1/2 by 3/4 inch.
E. Minimum Letter Size: 1/4 inch for name of units if viewing distance is less than 24 inches, 1/2 inch for viewing distances of up to 72 inches, and proportionately larger lettering for greater viewing distances. Include secondary lettering two-thirds to three-fourths the size of principal lettering.
F. Fasteners: Stainless steel rivets or self-tapping screws.
G. Adhesive: Contact-type permanent adhesive, compatible with label and with substrate.

H. Duct Label Contents: Include identification of duct service using same designations or abbreviations as used on Drawings. Also include the following:
   1. Duct size.
   2. Flow-Direction Arrows: Include flow-direction arrows on main distribution ducts. Arrows may be either integral with label or may be applied separately.
   3. Lettering Size: At least 1/2 inch for viewing distances of up to 72 inches and proportionately larger lettering for greater viewing distances.

2.6 STENCILS

A. Stencils for Piping:
   1. Lettering Size: At least 1/2 inch for viewing distances of up to 72 inches and proportionately larger lettering for greater viewing distances.
   2. Stencil Material: Aluminum, brass, or fiberboard.
   3. Stencil Paint: Exterior, gloss, acrylic enamel in colors complying with recommendations in ASME A13.1 unless otherwise indicated. Paint may be in pressurized spray-can form.
   4. Identification Paint: Exterior, acrylic enamel. Paint may be in pressurized spray-can form.
   5. Letter and Background Color: As indicated for specific application under Part 3.
B. Stencils for Ducts:
   1. Lettering Size: Minimum letter height of 1-1/4 inches for viewing distances of up to 15 ft. and proportionately larger lettering for greater viewing distances.
   2. Stencil Material: Aluminum.
   3. Stencil Paint: Exterior, gloss, acrylic enamel. Paint may be in pressurized spray-can form.
   4. Identification Paint: Exterior, acrylic enamel. Paint may be in pressurized spray-can form.
   5. Letter and Background Color: Color as indicated for specific application under Part 3.
C. Stencils for Access Panels and Door Labels, Equipment Labels, and Similar Operational Instructions:
   1. Lettering Size: Minimum letter height of 1/2 inch for viewing distances of up to 72 inches and proportionately larger lettering for greater viewing distances.
   2. Stencil Material: Aluminum
   3. Stencil Paint: Exterior, gloss, acrylic enamel. Paint may be in pressurized spray-can form.
   4. Identification Paint: Exterior, acrylic enamel. Paint may be in pressurized spray-can form.
   5. Letter and Background Color: As indicated for specific application under Part 3.

2.7 VALVE TAGS

A. Description: Stamped or engraved with 1/4-inch letters for piping system abbreviation and 1/2-inch numbers.
   1. Tag Material: Brass, 0.04-inchminimum thickness, with predrilled or stamped holes for attachment hardware.
   2. Fasteners: Brass link chain or S-hook.
B. Letter and Background Color: As indicated for specific application under Part 3.
C. Valve Schedules: For each piping system, on 8-1/2-by-11-inch bond paper. Tabulate valve number, piping system, system abbreviation (as shown on valve tag), location of valve (room or space), normal-operating position (open, closed, or modulating), and variations for identification. Mark valves for emergency shutoff and similar special uses.
   1. Include valve-tag schedule in operation and maintenance data.

2.8 WARNING TAGS

A. Description: Preprinted accident-prevention tags of plasticized card stock with matte finish suitable for writing.
   1. Size: Approximately 4 by 7 inches.
   2. Fasteners: Brass grommet and wire.
   3. Nomenclature: Large-size primary caption, such as "DANGER," "CAUTION," or "DO NOT OPERATE."
   4. Letter and Background Color: As indicated for specific application under Part 3.

PART 3 EXECUTION

3.1 PREPARATION

A. Clean piping and equipment surfaces of incompatible primers, paints, and encapsulants, as well as dirt, oil, grease, release agents, and other substances that could impair bond of identification devices.

3.2 INSTALLATION, GENERAL REQUIREMENTS

A. Coordinate installation of identifying devices with completion of covering and painting of surfaces where devices are to be applied.
B. Coordinate installation of identifying devices with locations of access panels and doors.
C. Install identifying devices before installing acoustical ceilings and similar concealment.
D. Locate identifying devices so that they are readily visible from the point of normal approach.

3.3 INSTALLATION OF EQUIPMENT LABELS, WARNING SIGNS, AND LABELS

A. Permanently fasten labels on each item of mechanical equipment.
B. Sign and Label Colors:
   1. White letters on an ANSI Z535.1 safety-blue background.
C. Locate equipment labels where accessible and visible.
D. Arc-Flash Warning Signs: Provide arc-flash warning signs on electrical disconnects and other equipment where arc-flash hazard exists, as indicated on Drawings, and in accordance with requirements of OSHA and NFPA 70E.

3.4 INSTALLATION OF WARNING TAPE

A. Warning Tape Color and Pattern: Yellow background with black diagonal stripes.
B. Install warning tape on pipes and ducts, with cross-designated walkways providing less than 6 ft. of clearance.
C. Locate tape so as to be readily visible from the point of normal approach.

3.5 INSTALLATION OF PIPE LABELS

A. Install pipe labels showing service and flow direction with permanent adhesive on pipes.
B. Stenciled Pipe Label Option: Stenciled labels showing service and flow direction may be provided instead of manufactured pipe labels, at Installer's option. Install stenciled pipe labels, complying with ASME A13.1 with painted, color-coded bands or rectangles on each piping system.
   1. Identification Paint: Use for contrasting background.
   2. Stencil Paint: Use for pipe marking.
C. Pipe-Label Locations: Locate pipe labels where piping is exposed or above accessible ceilings in finished spaces; machine rooms; accessible maintenance spaces such as shafts, tunnels, and plenums; and exterior exposed locations as follows:
   1. Within 3 ft. of each valve and control device.
   2. At access doors, manholes, and similar access points that permit view of concealed piping.
   3. Within 3 ft. of equipment items and other points of origination and termination.
   4. Spaced at maximum intervals of 25 ft. along each run. Reduce intervals to 10 ft. in areas of congested piping, ductwork, and equipment.
D. Do not apply plastic pipe labels or plastic tapes directly to bare pipes conveying fluids at temperatures of 125 deg F or higher. Where these pipes are to remain uninsulated, use a short section of insulation or use stenciled labels.
E. Flow-Direction Arrows: Use arrows to indicate direction of flow in pipes, including pipes where flow is allowed in both directions.
F. Pipe-Label Color Schedule:
   1. Chilled-Water Piping: White letters on an ANSI Z535.1 safety-green background
   2. Condenser-Water Piping: White letters on an ANSI Z535.1 safety-green background .
   3. Heating Water Piping: White letters on an ANSI Z535.1 safety-green background

4. Low-Pressure Steam Piping: Black letters on an ANSI Z535.1 safety-yellow background
5. High-Pressure Steam Piping: Black letters on an ANSI Z535.1 safety-yellow background.
6. Steam Condensate Piping: Black letters on an ANSI Z535.1 safety-yellow background.
7. Flammable Fluids: Black letters on an ANSI Z535.1 safety-yellow background
8. Combustible Fluids: White letters on an ANSI Z535.1 safety-brown background.
9. Potable and Other Water: White letters on an ANSI Z535.1 safety-green background .
10. Compressed Air: White letters on an ANSI Z535.1 safety-blue background.

3.6 INSTALLATION OF DUCT LABELS

A. Install self-adhesive duct labels showing service and flow direction with permanent adhesive on air ducts.
   1. Provide labels in the following color codes:
      a. For air supply ducts: White letters on blue background???.
      b. For air return ducts: White letters on blue background.
      c. For exhaust-, outside-, relief-, return-, and mixed-air ducts: White letters on blue background.
B. Stenciled Duct-Label Option: Stenciled labels showing service and flow direction may be provided instead of plastic-laminated duct labels, at Installer's option.
   1. For all air ducts: Black letters on white background.
C. Locate label near each point where ducts enter into and exit from concealed spaces and at maximum intervals of where exposed or are concealed by removable ceiling system.
D. Stenciled Access Panels and Door Labels, Equipment Labels, and Similar Operational Instructions:
   1. Black letters on White background.

3.7 INSTALLATION OF VALVE TAGS

A. Install tags on valves and control devices in piping systems, except check valves, valves within factory-fabricated equipment units, shutoff valves, and HVAC terminal devices and similar roughing-in connections of end-use fixtures and units. List tagged valves in a valve schedule in the operating and maintenance manual.
B. Valve-Tag Application Schedule: Tag valves according to size, shape, and color scheme and with captions similar to those indicated in "Valve-Tag Size and Shape" Subparagraph below.
   1. Valve-Tag Size and Shape:
      a. Chilled Water: 2 inches.
      b. Condenser Water: 2 inches.
      c. Refrigerant: 2 inchessquare.
      d. Hot Water: 2 inches, square.
      e. Gas: 2 inchessquare.
      f. Low-Pressure Steam: 2 inches.
      g. High-Pressure Steam: 2 inchessquare.
      h. Steam Condensate: 2 inches, square.
   2. Valve-Tag Colors:
      a. For each piping system, use the same lettering and background coloring system on valve tags as used for the Pipe Label Schedule text and background.

3.8 INSTALLATION OF WARNING TAGS

A. Warning Tag Color: Black letters on an ANSI Z535.1 safety-yellow background.
B. Attach warning tags, with proper message, to equipment and other items where indicated on Drawings.

END OF SECTION 230553

SECTION 230593 - TESTING, ADJUSTING, AND BALANCING FOR HVAC

PART 1 GENERAL

1.1 SUMMARY

A. Section Includes:
1. Testing, Adjusting, and Balancing of Air Systems:
a. Constant-volume air systems.
b. Dual-duct systems.
c. Variable-air-volume systems.
d. Multizone systems.
e. Induction-unit systems.
2. Testing, Adjusting, and Balancing of Hydronic Piping Systems:
a. Constant-flow hydronic systems.
b. Variable-flow hydronic systems.
c. Primary-secondary hydronic systems.
3. Testing, adjusting, and balancing of fuel oil systems for HVAC.
4. Testing, adjusting, and balancing of steam and condensate piping systems.
5. Testing, adjusting, and balancing of equipment.
6. Testing, adjusting, and balancing of existing HVAC systems and equipment.
7. Procedures for exhaust hoods.
8. Sound tests.
9. Vibration tests.
10. Duct leakage tests verification.
11. Pipe leakage tests verification.
12. UFAD plenum leakage tests verification.
13. HVAC-control system verification.
14. Smoke-control system tests.
15. Stair-pressurization system tests.
16. Elevator-pressurization system tests.

1.2 DEFINITIONS

A. AABC: Associated Air Balance Council.
B. NEBB: National Environmental Balancing Bureau.
C. TAB: Testing, adjusting, and balancing.
D. TABB: Testing, Adjusting, and Balancing Bureau.
E. TAB Specialist: An independent entity meeting qualifications to perform TAB work.
F. TDH: Total dynamic head.
G. UFAD: Underfloor air distribution.

1.3 PREINSTALLATION MEETINGS

A. TAB Conference: Conduct a TAB conference at Project site after approval of the TAB strategies and procedures plan, to develop a mutual understanding of the details. Provide a minimum of 14 days' advance notice of scheduled meeting time and location.
1. Minimum Agenda Items:
a. The Contract Documents examination report.
b. The TAB plan.
c. Needs for coordination and cooperation of trades and subcontractors.
d. Proposed procedures for documentation and communication flow.

1.4 INFORMATIONAL SUBMITTALS

A. Qualification Data: Within 60 days of Contractor's Notice to Proceed, submit documentation that the TAB specialist and this Project's TAB team members meet the qualifications specified in "Quality Assurance" Article.

B. Contract Documents Examination Report: Within 60 days of Contractor's Notice to Proceed, submit the Contract Documents review report, as specified in Part 3.

C. Strategies and Procedures Plan: Within 60 days of Contractor's Notice to Proceed, submit TAB strategies and step-by-step procedures, as specified in "Preparation" Article.

D. System Readiness Checklists: Within 60 days of Contractor's Notice to Proceed, submit system readiness checklists, as specified in "Preparation" Article.

E. Examination Report: Submit a summary report of the examination review required in "Examination" Article.

F. Certified TAB reports.

G. Sample report forms.

H. Instrument calibration reports, to include the following:

1. Instrument type and make.
2. Serial number.
3. Application.
4. Dates of use.
5. Dates of calibration.

1.5 QUALITY ASSURANCE

A. TAB Specialists Qualifications, Certified by AABC:

1. TAB Field Supervisor: Employee of the TAB specialist and certified by AABC.
2. TAB Technician: Employee of the TAB specialist and certified by AABC.

B. TAB Specialists Qualifications, Certified by NEBB or TABB:

1. TAB Field Supervisor: Employee of the TAB specialist and certified by NEBB or TABB.
2. TAB Technician: Employee of the TAB specialist and certified by NEBB or TABB.

C. Code and AHJ Compliance: TAB is required to comply with governing codes and requirements of authorities having jurisdiction.

1.6 FIELD CONDITIONS

A. Full Owner Occupancy: Owner will occupy the site and existing building during entire TAB period. Cooperate with Owner during TAB operations to minimize conflicts with Owner's operations.

B. Partial Owner Occupancy: Owner may occupy completed areas of building before Substantial Completion. Cooperate with Owner during TAB operations to minimize conflicts with Owner's operations.

PART 2 PRODUCTS (NOT APPLICABLE)

PART 3 EXECUTION

3.1 EXAMINATION

A. Examine the Contract Documents to become familiar with Project requirements and to discover conditions in systems designs that may preclude proper TAB of systems and equipment.

B. Examine installed systems for balancing devices, such as test ports, gauge cocks, thermometer wells, flow-control devices, balancing valves and fittings, and manual volume dampers. Verify that locations of these balancing devices are applicable for intended purpose and are accessible.

C. Examine the approved submittals for HVAC systems and equipment.

D. Examine design data, including HVAC system descriptions, statements of design assumptions for environmental conditions and systems output, and statements of philosophies and assumptions about HVAC system and equipment controls.

E. Examine ceiling plenums and underfloor air plenums used for HVAC to verify that they are properly separated from adjacent areas and sealed.

F. Examine equipment performance data, including fan and pump curves.

1. Relate performance data to Project conditions and requirements, including system effects that can create undesired or unpredicted conditions that cause reduced capacities in all or part of a system.

2. Calculate system-effect factors to reduce performance ratings of HVAC equipment when installed under conditions different from the conditions used to rate equipment performance. To calculate system effects for air systems, use tables and charts found in AMCA 201, "Fans and Systems," or in SMACNA's "HVAC Systems - Duct Design." Compare results with the design data and installed conditions.

G. Examine system and equipment installations and verify that field quality-control testing, cleaning, and adjusting specified in individual Sections have been performed.

H. Examine test reports specified in individual system and equipment Sections.

I. Examine HVAC equipment and verify that bearings are greased, belts are aligned and tight, filters are clean, and equipment with functioning controls is ready for operation.

J. Examine terminal units, such as variable-air-volume boxes, and verify that they are accessible and their controls are connected and functioning.

K. Examine temporary and permanent strainers. Verify that temporary strainer screens used during system cleaning and flushing have been removed and permanent strainer baskets are installed and clean.

L. Examine control valves for proper installation for their intended function of isolating, throttling, diverting, or mixing fluid flows.

M. Examine heat-transfer coils for correct piping connections and for clean and straight fins.

N. Examine system pumps to ensure absence of entrained air in the suction piping.

O. Examine operating safety interlocks and controls on HVAC equipment.

P. Examine control dampers for proper installation for their intended function of isolating, throttling, diverting, or mixing air flows.

Q. Report deficiencies discovered before and during performance of TAB procedures. Observe and record system reactions to changes in conditions. Record default set points if different from indicated values.

3.2 PREPARATION

A. Prepare a TAB plan that includes the following:

1. Equipment and systems to be tested.

2. Strategies and step-by-step procedures for balancing the systems.

3. Instrumentation to be used.

4. Sample forms with specific identification for all equipment.

B. Perform system-readiness checks of HVAC systems and equipment to verify system readiness for TAB work. Include, at a minimum, the following:

1. Airside:

a. Verify that leakage and pressure tests on air distribution systems have been satisfactorily completed.

b. Duct systems are complete with terminals installed.

c. Volume, smoke, and fire dampers are open and functional.

d. Clean filters are installed.

e. Fans are operating, free of vibration, and rotating in correct direction.

f. Variable-frequency controllers' startup is complete and safeties are verified.

g. Automatic temperature-control systems are operational.

h. Ceilings are installed.

i. Windows and doors are installed.

j. Suitable access to balancing devices and equipment is provided.

2. Hydronics:

a. Verify leakage and pressure tests on water distribution systems have been satisfactorily completed.

b. Piping is complete with terminals installed.

c. Water treatment is complete.

d. Systems are flushed, filled, and air purged.
e. Strainers are pulled and cleaned.
f. Control valves are functioning in accordance with the sequence of operation.
g. Shutoff and balance valves have been verified to be 100 percent open.
h. Pumps are started and proper rotation is verified.
i. Pump gauge connections are installed directly at pump inlet and outlet flanges or in discharge and suction pipe prior to valves or strainers.
j. Variable-frequency controllers' startup is complete and safeties are verified.
k. Suitable access to balancing devices and equipment is provided.

3.3 GENERAL PROCEDURES FOR TESTING AND BALANCING

A. Perform testing and balancing procedures on each system in accordance with the procedures contained in AABC's "National Standards for Total System Balance" and in this Section.
B. Cut insulation, ducts, pipes, and equipment casings for installation of test probes to the minimum extent necessary for TAB procedures.
   1. After testing and balancing, patch probe holes in ducts with same material and thickness as used to construct ducts.
   2. After testing and balancing, install test ports and duct access doors that comply with requirements in Section 233300 "Air Duct Accessories."
   3. Where holes for probes are required in piping or hydronic equipment, install pressure and temperature test plugs to seal systems.
   4. Install and join new insulation that matches removed materials. Restore insulation, coverings, vapor barrier, and finish in accordance with Section 230713 "Duct Insulation," Section 230716 "HVAC Equipment Insulation," and Section 230719 "HVAC Piping Insulation."
C. Mark equipment and balancing devices, including damper-control positions, valve position indicators, fan-speed-control levers, and similar controls and devices, with paint or other suitable, permanent identification material to show final settings.
D. Take and report testing and balancing measurements in inch-pound (IP) units.

3.4 TESTING, ADJUSTING, AND BALANCING OF HVAC EQUIPMENT

A. Test, adjust, and balance HVAC equipment indicated on Drawings, including, but not limited to, the following:
   1. Motors.
   2. Pumps.
   3. Fans and ventilators.
   4. Boilers.
   5. Heat exchangers.
   6. Condensers.
   7. Water chillers.
   8. Cooling towers.
   9. Air-handling units.
   10. Split-system air conditioners.

3.5 FOR BALANCING AIR SYSTEMS

A. Prepare test reports for both fans and outlets. Obtain manufacturer's outlet factors and recommended testing procedures. Crosscheck the summation of required outlet volumes with required fan volumes.
B. Prepare schematic diagrams of systems' Record drawings duct layouts.
C. For variable-air-volume systems, develop a plan to simulate diversity.
D. Determine the best locations in main and branch ducts for accurate duct-airflow measurements.
E. Check airflow patterns from the outdoor-air louvers and dampers and the return- and exhaust-air dampers through the supply-fan discharge and mixing dampers.
F. Locate start-stop and disconnect switches, electrical interlocks, and motor starters.
G. Verify that motor starters are equipped with properly sized thermal protection.

H. Check dampers for proper position to achieve desired airflow path.
I. Check for airflow blockages.
J. Check condensate drains for proper connections and functioning.
K. Check for proper sealing of air-handling-unit components.

3.6 PROCEDURES FOR CONSTANT-VOLUME AIR SYSTEMS

A. Adjust fans to deliver total indicated airflows within the maximum allowable fan speed listed by fan manufacturer.
   1. Measure total airflow.
      a. Set outside-air, return-air, and relief-air dampers for proper position that simulates minimum outdoor-air conditions.
      b. Where duct conditions allow, measure airflow by main Pitot-tube traverse. If necessary, perform multiple Pitot-tube traverses close to the fan and prior to any outlets, to obtain total airflow.
      c. Where duct conditions are unsuitable for Pitot-tube traverse measurements, a coil traverse may be acceptable.
   2. Measure fan static pressures as follows:
      a. Measure static pressure directly at the fan outlet or through the flexible connection.
      b. Measure static pressure directly at the fan inlet or through the flexible connection.
      c. Measure static pressure across each component that makes up the air-handling system.
      d. Report artificial loading of filters at the time static pressures are measured.
   3. Review Contractor-prepared shop drawings and Record drawings to determine variations in design static pressures versus actual static pressures. Calculate actual system-effect factors. Recommend adjustments to accommodate actual conditions.
   4. Obtain approval from Architect for adjustment of fan speed higher or lower than indicated speed. Comply with requirements in HVAC Sections for air-handling units for adjustment of fans, belts, and pulley sizes to achieve indicated air-handling-unit performance.
   5. Do not make fan-speed adjustments that result in motor overload. Consult equipment manufacturers about fan-speed safety factors. Modulate dampers and measure fan-motor amperage to ensure that no overload occurs. Measure amperage in full-cooling, full-heating, economizer, and any other operating mode to determine the maximum required brake horsepower.
B. Adjust volume dampers for main duct, submain ducts, and major branch ducts to indicated airflows.
   1. Measure airflow of submain and branch ducts.
   2. Adjust submain and branch duct volume dampers for specified airflow.
   3. Re-measure each submain and branch duct after all have been adjusted.
C. Adjust air inlets and outlets for each space to indicated airflows.
   1. Set airflow patterns of adjustable outlets for proper distribution without drafts.
   2. Measure inlets and outlets airflow.
   3. Adjust each inlet and outlet for specified airflow.
   4. Re-measure each inlet and outlet after they have been adjusted.
D. Verify final system conditions.
   1. Re-measure and confirm that minimum outdoor, return, and relief airflows are within design. Readjust to design if necessary.
   2. Re-measure and confirm that total airflow is within design.
   3. Re-measure all final fan operating data, speed, volts, amps, and static profile.
   4. Mark all final settings.
   5. Test system in economizer mode. Verify proper operation and adjust if necessary.
   6. Measure and record all operating data.
   7. Record final fan-performance data.

3.7 PROCEDURES FOR DUAL-DUCT SYSTEMS

A. Adjust the dual-duct systems as follows:

1. Verify that the system static pressure sensor is located two-thirds of the distance down the duct from the fan discharge. On systems with separate hot-deck and cold-deck fans, verify the location of the sensor on each deck.
2. Verify that the system is under static pressure control.
3. Select the terminal unit that is most critical to the supply-fan airflow. Measure inlet static pressure, and adjust system static pressure control set point, so the entering static pressure for the critical terminal unit is not less than the sum of the terminal-unit manufacturer's recommended minimum inlet static pressure plus the static pressure needed to overcome terminal-unit discharge system losses.
4. Calibrate and balance each terminal unit's hot deck and cold deck for maximum and minimum design airflow as follows:
    a. Adjust controls so that terminal is calling for full cooling. Some controllers require starting with minimum set point. Verify calibration procedure for specific project.
    b. Measure airflow and adjust calibration factors as required for design cold-deck maximum airflow and hot-deck minimum airflow. Record calibration factors.
    c. When maximum airflow is correct, balance the air outlets downstream from terminal units.
    d. Adjust controls so that terminal is calling for full heating.
    e. Measure airflow and adjust calibration factors as required for design cold-deck minimum airflow and hot-deck maximum airflow. Record calibration factors. If no minimum calibration is available, note any deviation from design airflow.
5. After terminals have been calibrated and balanced, test and adjust system for total airflow. Adjust fans to deliver total design airflows within the maximum allowable fan speed listed by fan manufacturer.
    a. Set outside-air, return-air, and relief-air dampers for proper position that simulates minimum outdoor-air conditions.
    b. Set terminals for maximum airflow. If system design includes diversity (cooling coil or fan), adjust terminals for maximum and minimum airflow so that connected total matches cooling coil or fan selection and simulates actual load in the building. In systems with separate hot-deck and cold-deck fans, diversity consideration applies to each individual fan.
    c. Where duct conditions allow, measure airflow by main Pitot-tube traverse. If necessary, perform multiple Pitot-tube traverses close to the fan and prior to any outlets, to obtain total airflow.
    d. Where duct conditions are unsuitable for Pitot-tube traverse measurements, a coil traverse may be acceptable.
6. Measure the fan(s) static pressures as follows:
    a. Measure static pressure directly at the fan outlet or through the flexible connection.
    b. Measure static pressure directly at the fan inlet or through the flexible connection.
    c. Measure static pressure across each component that makes up the air-handling system.
    d. Report any artificial loading of filters at the time static pressures are measured.
7. Set final return and outside airflow to the fan(s) while operating at maximum return airflow and minimum outdoor airflow.
    a. Balance the return-air ducts and inlets.
    b. Verify that all terminal units are meeting design airflow under system maximum flow.
8. Re-measure the inlet static pressure at the most critical terminal unit, and adjust the system static pressure set point to the most energy-efficient set point to maintain the optimum system static pressure. Record set point and give to controls Contractor.
9. Verify final system conditions as follows:
    a. Re-measure and confirm that minimum outdoor, return, and relief airflows are within design. Readjust to match design if necessary.
    b. Re-measure and confirm that total airflow is within design.
    c. Re-measure final fan operating data, speed, volts, amps, and static profile.
    d. Mark final settings.
    e. Test system in economizer mode. Verify proper operation and adjust if necessary. Measure and record all operating data.
    f. Verify tracking between supply and return fans.
10. Record final fan-performance data.

3.8 PROCEDURES FOR VARIABLE-AIR-VOLUME SYSTEMS

A. Adjust the variable-air-volume systems as follows:

1. Verify that the system static pressure sensor is located two-thirds of the distance down the duct from the fan discharge.
2. Verify that the system is under static pressure control.
3. Select the terminal unit that is most critical to the supply-fan airflow. Measure inlet static pressure, and adjust system static pressure control set point so the entering static pressure for the critical terminal unit is not less than the sum of the terminal-unit manufacturer's recommended minimum inlet static pressure plus the static pressure needed to overcome terminal-unit discharge system losses.
4. Calibrate and balance each terminal unit for maximum and minimum design airflow as follows:
   a. Adjust controls so that terminal is calling for maximum airflow. Some controllers require starting with minimum airflow. Verify calibration procedure for specific project.
   b. Measure airflow and adjust calibration factor as required for design maximum airflow. Record calibration factor.
   c. When maximum airflow is correct, balance the air outlets downstream from terminal units.
   d. Adjust controls so that terminal is calling for minimum airflow.
   e. Measure airflow and adjust calibration factor as required for design minimum airflow. Record calibration factor. If no minimum calibration is available, note any deviation from design airflow.
   f. On constant volume terminals, in critical areas where room pressure is to be maintained, verify that the airflow remains constant over the full range of full cooling to full heating. Note any deviation from design airflow or room pressure.
5. After terminals have been calibrated and balanced, test and adjust system for total airflow. Adjust fans to deliver total design airflows within the maximum allowable fan speed listed by fan manufacturer.
   a. Set outside-air, return-air, and relief-air dampers for proper position that simulates minimum outdoor-air conditions.
   b. Set terminals for maximum airflow. If system design includes diversity, adjust terminals for maximum and minimum airflow, so that connected total matches fan selection and simulates actual load in the building.
   c. Where duct conditions allow, measure airflow by main Pitot-tube traverse. If necessary, perform multiple Pitot-tube traverses close to the fan and prior to any outlets, to obtain total airflow.
   d. Where duct conditions are unsuitable for Pitot-tube traverse measurements, a coil traverse may be acceptable.
6. Measure fan static pressures as follows:
   a. Measure static pressure directly at the fan outlet or through the flexible connection.
   b. Measure static pressure directly at the fan inlet or through the flexible connection.
   c. Measure static pressure across each component that makes up the air-handling system.
   d. Report any artificial loading of filters at the time static pressures are measured.
7. Set final return and outside airflow to the fan while operating at maximum return airflow and minimum outdoor airflow.
   a. Balance the return-air ducts and inlets.
   b. Verify that terminal units are meeting design airflow under system maximum flow.
8. Re-measure the inlet static pressure at the most critical terminal unit, and adjust the system static pressure set point to the most energy-efficient set point to maintain the optimum system static pressure. Record set point and give to controls Contractor.
9. Verify final system conditions as follows:
   a. Re-measure and confirm that minimum outdoor, return, and relief airflows are within design. Readjust to match design if necessary.
   b. Re-measure and confirm that total airflow is within design.
   c. Re-measure final fan operating data, speed, volts, amps, and static profile.
   d. Mark final settings.

e. Test system in economizer mode. Verify proper operation and adjust if necessary. Measure and record all operating data.

f. Verify tracking between supply and return fans.

3.9 PROCEDURES FOR MULTIZONE SYSTEMS

A. Position the unit's automatic zone dampers for maximum flow through the cooling coil.

B. The procedures for multizone systems will utilize the zone balancing dampers to achieve the indicated airflow within the zone.

C. After balancing, place the unit's automatic zone dampers for maximum heating flow. Retest zone airflows and record any variances.

D. Adjust fans to deliver total indicated airflows within the maximum allowable fan speed listed by fan manufacturer.

1. Measure total airflow.

a. Set outside-air, return-air and relief-air dampers for proper position that simulates minimum outdoor air conditions.

b. Where duct conditions allow, measure airflow by main Pitot-tube traverse. If necessary, perform multiple Pitot-tube traverses close to the fan and prior to any outlets, to obtain total airflow.

c. Where duct conditions are unsuitable for Pitot-tube traverse measurements, a coil traverse may be acceptable.

2. Measure fan static pressures as follows:

a. Measure static pressure directly at the fan outlet or through the flexible connection.

b. Measure static pressure directly at the fan inlet or through the flexible connection.

c. Measure static pressure across each component that makes up the air-handling system.

d. Report artificial loading of filters at the time static pressures are measured.

3. Review Record drawings to determine variations in design static pressures versus actual static pressures. Calculate actual system-effect factors. Recommend adjustments to accommodate actual conditions.

4. Obtain approval from Architect for adjustment of fan speed higher or lower than indicated speed. Comply with requirements in HVAC Sections for air-handling units for adjustment of fans, belts, and pulley sizes to achieve indicated air-handling-unit performance.

5. Do not make fan-speed adjustments that result in motor overload. Consult equipment manufacturers about fan-speed safety factors. Modulate dampers and measure fan-motor amperage to ensure that no overload occurs. Measure amperage in full-cooling, full-heating, economizer, and any other operating mode to determine the maximum required brake horsepower.

E. Adjust volume dampers for main duct, submain ducts, and major branch ducts to indicated airflows.

1. Measure airflow of submain and branch ducts.

2. Adjust submain and branch duct volume dampers for specified airflow.

3. Re-measure each submain and branch duct after all have been adjusted.

F. Adjust air inlets and outlets for each space to indicated airflows.

1. Set airflow patterns of adjustable outlets for proper distribution without drafts.

2. Measure inlet and outlet airflow.

3. Adjust each inlet and outlet for specified airflow.

4. Re-measure each inlet and outlet after they have been adjusted.

G. Verify final system conditions.

1. Re-measure and confirm that minimum outdoor, return, and relief airflows are within design. Readjust to match design if necessary.

2. Re-measure and confirm that total airflow is within design.

3. Re-measure all final fan operating data, speed, volts, amps, and static profile.

4. Mark all final settings.

5. Test system in economizer mode. Verify proper operation and adjust if necessary.

6. Measure and record all operating data.

7. Record final fan-performance data.

3.10 PROCEDURES FOR INDUCTION-UNIT SYSTEMS

A. Balance primary-air risers by measuring static pressure at the nozzles of the top and bottom units of each riser, to determine which risers must be throttled. Adjust risers to indicated airflow within specified tolerances.

B. Adjust each induction unit.

C. Adjust fans to deliver total indicated airflows within the maximum allowable fan speed listed by fan manufacturer.

1. Measure total airflow.
   a. Set outside-air, return-air, and relief-air dampers for proper position that simulates minimum outdoor-air conditions.
   b. Where duct conditions allow, measure airflow by main Pitot-tube traverse. If necessary, perform multiple Pitot-tube traverses close to the fan and prior to any outlets, to obtain total airflow.
   c. Where duct conditions are unsuitable for Pitot-tube traverse measurements, a coil traverse may be acceptable.
2. Measure fan static pressures as follows:
   a. Measure static pressure directly at the fan outlet or through the flexible connection.
   b. Measure static pressure directly at the fan inlet or through the flexible connection.
   c. Measure static pressure across each component that makes up the air-handling system.
   d. Report artificial loading of filters at the time static pressures are measured.
3. Review Record drawings to determine variations in design static pressures versus actual static pressures. Calculate actual system-effect factors. Recommend adjustments to accommodate actual conditions.
4. Obtain approval from for adjustment of fan speed higher or lower than indicated speed. Comply with requirements in HVAC Sections for air-handling units for adjustment of fans, belts, and pulley sizes to achieve indicated air-handling-unit performance.
5. Do not make fan-speed adjustments that result in motor overload. Consult equipment manufacturers about fan-speed safety factors. Modulate dampers and measure fan-motor amperage to ensure that no overload occurs. Measure amperage in full-cooling, full-heating, economizer, and any other operating mode to determine the maximum required brake horsepower.

D. Adjust volume dampers for main duct, submain ducts, and major branch ducts to indicated airflows.

1. Measure airflow of submain and branch ducts.
2. Adjust submain and branch duct volume dampers for specified airflow.
3. Re-measure each submain and branch duct after all have been adjusted.

E. Balance airflow to each induction unit by measuring the nozzle pressure and comparing it to the manufacturer's published data for nozzle pressure versus cfm. Adjust the unit's inlet damper to achieve the required nozzle pressure for design cfm.

F. Verify final system conditions.

1. Re-measure and confirm that minimum outdoor, return, and relief airflows are within design. Readjust to match design if necessary.
2. Re-measure and confirm that total airflow is within design.
3. Re-measure all final fan operating data, speeds, volts, amps, and static profile.
4. Mark all final settings.
5. Test system in economizer mode. Verify proper operation and adjust if necessary.
6. Measure and record all operating data.
7. Record final fan-performance data.

3.11 GENERAL PROCEDURES FOR HYDRONIC SYSTEMS

A. Prepare test reports for pumps, coils, and other equipment. Obtain approved submittals and manufacturer-recommended testing procedures. Crosscheck the summation of required coil and equipment flow rates with pump design flow rate.

B. Prepare schematic diagrams of systems' Record drawings piping layouts.

C. In addition to requirements in "Preparation" Article, prepare hydronic systems for testing and balancing as follows:

1. Check expansion tank for proper setting.
2. Check highest vent for adequate pressure.
3. Check flow-control valves for proper position.
4. Locate start-stop and disconnect switches, electrical interlocks, and motor controllers.
5. Verify that motor controllers are equipped with properly sized thermal protection.
6. Check that air has been purged from the system.

D. Measure and record upstream and downstream pressure of each piece of equipment.

E. Measure and record upstream and downstream pressure of pressure-reducing valves.

F. Check settings and operation of automatic temperature-control valves, self-contained control valves, and pressure-reducing valves. Record final settings.
   1. Check settings and operation of each safety valve. Record settings.

3.12 PROCEDURES FOR CONSTANT-FLOW HYDRONIC SYSTEMS

A. Adjust pumps to deliver total design flow.
   1. Measure total water flow.
      a. Position valves for full flow through coils.
      b. Measure flow by main flow meter, if installed.
      c. If main flow meter is not installed, determine flow by pump TDH or known equipment pressure drop.
   2. Measure pump TDH as follows:
      a. Measure discharge pressure directly at the pump outlet flange or in discharge pipe prior to any valves.
      b. Measure inlet pressure directly at the pump inlet flange or in suction pipe prior to any valves or strainers.
      c. Convert pressure to head and correct for differences in gauge heights.
      d. Verify pump impeller size by measuring the TDH with the discharge valve closed. Note the point on manufacturer's pump curve at zero flow, and verify that the pump has the intended impeller size.
      e. With valves open, read pump TDH. Adjust pump discharge valve until design water flow is achieved. If excessive throttling is required to achieve desired flow, recommend pump impellers be trimmed to reduce excess throttling.
   3. Monitor motor performance during procedures, and do not operate motor in an overloaded condition.

B. Adjust flow-measuring devices installed in mains and branches to design water flows.
   1. Measure flow in main and branch pipes.
   2. Adjust main and branch balance valves for design flow.
   3. Re-measure each main and branch after all have been adjusted.

C. Adjust flow-measuring devices installed at terminals for each space to design water flows.
   1. Measure flow at terminals.
   2. Adjust each terminal to design flow.
   3. Re-measure each terminal after it is adjusted.
   4. Position control valves to bypass the coil, and adjust the bypass valve to maintain design flow.
   5. Perform temperature tests after flows have been balanced.

D. For systems with pressure-independent valves at terminals:
   1. Measure differential pressure and verify that it is within manufacturer's specified range.
   2. Perform temperature tests after flows have been verified.

E. For systems without pressure-independent valves or flow-measuring devices at terminals:
   1. Measure and balance coils by either coil pressure drop or temperature method.
   2. If balanced by coil pressure drop, perform temperature tests after flows have been verified.

F. Verify final system conditions as follows:
   1. Re-measure and confirm that total water flow is within design.
   2. Re-measure final pumps' operating data, TDH, volts, amps, and static profile.
   3. Mark final settings.

G. Verify that memory stops have been set.

3.13 PROCEDURES FOR VARIABLE-FLOW HYDRONIC SYSTEMS

A. Balance systems with automatic two- and three-way control valves by setting systems at maximum flow through heat-exchange terminals, and proceed as specified above for hydronic systems.

B. Adjust the variable-flow hydronic system as follows:
   1. Verify that the pressure-differential sensor(s) is located as indicated.
   2. Determine whether there is diversity in the system.

C. For systems with no flow diversity:
   1. Adjust pumps to deliver total design flow.
      a. Measure total water flow.
         1) Position valves for full flow through coils.
         2) Measure flow by main flow meter, if installed.
         3) If main flow meter is not installed, determine flow by pump TDH or known equipment pressure drop.
      b. Measure pump TDH as follows:
         1) Measure discharge pressure directly at the pump outlet flange or in discharge pipe prior to any valves.
         2) Measure inlet pressure directly at the pump inlet flange or in suction pipe prior to any valves or strainers.
         3) Convert pressure to head and correct for differences in gauge heights.
         4) Verify pump impeller size by measuring the TDH with the discharge valve closed. Note the point on manufacturer's pump curve at zero flow, and verify that the pump has the intended impeller size.
         5) With valves open, read pump TDH. Adjust pump discharge valve or speed until design water flow is achieved. If excessive throttling is required to achieve desired flow, recommend pump impellers be trimmed to reduce excess throttling.
      c. Monitor motor performance during procedures, and do not operate motor in an overloaded condition.
   2. Adjust flow-measuring devices installed in mains and branches to design water flows.
      a. Measure flow in main and branch pipes.
      b. Adjust main and branch balance valves for design flow.
      c. Re-measure each main and branch after all have been adjusted.
   3. Adjust flow-measuring devices installed at terminals for each space to design water flows.
      a. Measure flow at terminals.
      b. Adjust each terminal to design flow.
      c. Re-measure each terminal after it is adjusted.
      d. Position control valves to bypass the coil, and adjust the bypass valve to maintain design flow.
      e. Perform temperature tests after flows have been balanced.
   4. For systems with pressure-independent valves at terminals:
      a. Measure differential pressure and verify that it is within manufacturer's specified range.
      b. Perform temperature tests after flows have been verified.
   5. For systems without pressure-independent valves or flow-measuring devices at terminals:
      a. Measure and balance coils by either coil pressure drop or temperature method.
      b. If balanced by coil pressure drop, perform temperature tests after flows have been verified.
   6. Prior to verifying final system conditions, determine the system pressure-differential set point(s).
   7. If the pump discharge valve was used to set total system flow with variable-frequency controller at 60 Hz, at completion, open discharge valve 100 percent, and allow variable-frequency controller to control system differential-pressure set point. Record pump data under both conditions.
   8. Mark final settings and verify that all memory stops have been set.
   9. Verify final system conditions as follows:
      a. Re-measure and confirm that total flow is within design.
      b. Re-measure final pumps' operating data, TDH, volts, amps, speed, and static profile.
      c. Mark final settings.

D. For systems with flow diversity:
   1. Determine diversity factor.
   2. Simulate system diversity by closing required number of control valves, as approved by Architect.
   3. Adjust pumps to deliver total design flow.
      a. Measure total water flow.
         1) Position valves for full flow through coils.
         2) Measure flow by main flow meter, if installed.
         3) If main flow meter is not installed, determine flow by pump TDH or known equipment pressure drop.
      b. Measure pump TDH as follows:
         1) Measure discharge pressure directly at the pump outlet flange or in discharge pipe prior to any valves.
         2) Measure inlet pressure directly at the pump inlet flange or in suction pipe prior to any valves or strainers.
         3) Convert pressure to head and correct for differences in gauge heights.
         4) Verify pump impeller size by measuring the TDH with the discharge valve closed. Note the point on manufacturer's pump curve at zero flow, and verify that the pump has the intended impeller size.
         5) With valves open, read pump TDH. Adjust pump discharge valve or speed until design water flow is achieved. If excessive throttling is required to achieve desired flow, recommend pump impellers be trimmed to reduce excess throttling.
      c. Monitor motor performance during procedures, and do not operate motor in an overloaded condition.
   4. Adjust flow-measuring devices installed in mains and branches to design water flows.
      a. Measure flow in main and branch pipes.
      b. Adjust main and branch balance valves for design flow.
      c. Re-measure each main and branch after all have been adjusted.
   5. Adjust flow-measuring devices installed at terminals for each space to design water flows.
      a. Measure flow at terminals.
      b. Adjust each terminal to design flow.
      c. Re-measure each terminal after it is adjusted.
      d. Position control valves to bypass the coil, and adjust the bypass valve to maintain design flow.
      e. Perform temperature tests after flows have been balanced.
   6. For systems with pressure-independent valves at terminals:
      a. Measure differential pressure, and verify that it is within manufacturer's specified range.
      b. Perform temperature tests after flows have been verified.
   7. For systems without pressure-independent valves or flow-measuring devices at terminals:
      a. Measure and balance coils by either coil pressure drop or temperature method.
      b. If balanced by coil pressure drop, perform temperature tests after flows have been verified.
   8. Open control valves that were shut. Close a sufficient number of control valves that were previously open to maintain diversity, and balance terminals that were just opened.
   9. Prior to verifying final system conditions, determine system pressure-differential set point(s).
   10. If the pump discharge valve was used to set total system flow with variable-frequency controller at 60 Hz, at completion, open discharge valve 100 percent, and allow variable-frequency controller to control system differential-pressure set point. Record pump data under both conditions.
   11. Mark final settings and verify that memory stops have been set.
   12. Verify final system conditions as follows:
      a. Re-measure and confirm that total water flow is within design.
      b. Re-measure final pumps' operating data, TDH, volts, amps, speed, and static profile.
      c. Mark final settings.

3.14 PROCEDURES FOR PRIMARY-SECONDARY HYDRONIC SYSTEMS

A. Balance the primary circuit flow first.
B. Balance the secondary circuits after the primary circuits are complete.

C. Adjust pumps to deliver total design flow.
   1. Measure total water flow.
      a. Position valves for full flow through coils.
      b. Measure flow by main flow meter, if installed.
      c. If main flow meter is not installed, determine flow by pump TDH or known equipment pressure drop.
   2. Measure pump TDH as follows:
      a. Measure discharge pressure directly at the pump outlet flange or in discharge pipe prior to any valves.
      b. Measure inlet pressure directly at the pump inlet flange or in suction pipe prior to any valves or strainers.
      c. Convert pressure to head and correct for differences in gauge heights.
      d. Verify pump impeller size by measuring the TDH with the discharge valve closed. Note the point on manufacturer's pump curve at zero flow, and verify that the pump has the intended impeller size.
      e. With valves open, read pump TDH. Adjust pump discharge valve or speed until design water flow is achieved. If excessive throttling is required to achieve desired flow, recommend pump impellers be trimmed to reduce excess throttling.
   3. Monitor motor performance during procedures, and do not operate motor in an overloaded condition.
D. Adjust flow-measuring devices installed in mains and branches to design water flows.
   1. Measure flow in main and branch pipes.
   2. Adjust main and branch balance valves for design flow.
   3. Re-measure each main and branch after all have been adjusted.
E. Adjust flow-measuring devices installed at terminals for each space to design water flows.
   1. Measure flow at terminals.
   2. Adjust each terminal to design flow.
   3. Re-measure each terminal after it is adjusted.
   4. Position control valves to bypass the coil, and adjust the bypass valve to maintain design flow.
   5. Perform temperature tests after flows have been balanced.
F. For systems with pressure-independent valves at terminals:
   1. Measure differential pressure and verify that it is within manufacturer's specified range.
   2. Perform temperature tests after flows have been verified.
G. For systems without pressure-independent valves or flow-measuring devices at terminals:
   1. Measure and balance coils by either coil pressure drop or temperature method.
   2. If balanced by coil pressure drop, perform temperature tests after flows have been verified.
H. Verify final system conditions as follows:
   1. Re-measure and confirm that total water flow is within design.
   2. Re-measure final pumps' operating data, TDH, volts, amps, speed, and static profile.
   3. Mark final settings.
I. Verify that memory stops have been set.

3.15 PROCEDURES FOR STEAM AND CONDENSATE SYSTEMS

A. Measure and record upstream and downstream pressure of each piece of equipment.
B. Measure and record upstream and downstream steam pressure of pressure-reducing valves.
C. Check settings and operation of automatic temperature-control valves, self-contained control valves, and pressure-reducing valves. Record final settings.
D. Check settings and operation of each safety valve. Record settings.
E. Verify the operation of each steam trap.

3.16 PROCEDURES FOR STEAM-TO-WATER HEAT EXCHANGERS

A. Adjust and record water flow to within specified tolerances.
B. Measure and record inlet and outlet water temperatures.

C. Measure and record inlet steam pressure and condensate outlet pressure.
D. Check and record settings and operation of safety and relief valves.

3.17 PROCEDURES FOR WATER-TO-WATER HEAT EXCHANGERS

A. Adjust and record water flow to within specified tolerances.
B. Measure and record inlet and outlet water temperatures.
C. Measure and record pressure drop.
D. Check and record settings and operation of safety and relief valves.

3.18 PROCEDURES FOR MOTORS

A. Motors [1/2] ???Insert value??? HP and Larger: Test at final balanced conditions and record the following data:
   1. Manufacturer's name, model number, and serial number.
   2. Motor horsepower rating.
   3. Motor rpm.
   4. Phase and hertz.
   5. Nameplate and measured voltage, each phase.
   6. Nameplate and measured amperage, each phase.
   7. Starter size and thermal-protection-element rating.
   8. Service factor and frame size.
B. Motors Driven by Variable-Frequency Controllers: Test manual bypass of controller to prove proper operation.

3.19 PROCEDURES FOR WATER CHILLERS

A. Air-Cooled Chillers: Balance water flow through each evaporator to within specified tolerances of indicated flow, with all pumps operating. With only one chiller operating in a multiple-chiller installation, do not exceed the flow for the maximum tube velocity recommended by the chiller manufacturer. Measure and record the following data with each chiller operating at design conditions:
   1. Evaporator-water entering and leaving temperatures, pressure drop, and water flow.
   2. Evaporator and condenser refrigerant temperatures and pressures, using instruments furnished by chiller manufacturer.
   3. Power factor if factory-installed instrumentation is furnished for measuring kilowatts.
   4. Kilowatt input if factory-installed instrumentation is furnished for measuring kilowatts.
   5. Capacity: Calculate in [tons] [kilowatts] ???Insert units??? of cooling.
   6. Efficiency: Calculate operating efficiency for comparison to submitted equipment.
   7. Verify condenser-fan rotation and record fan and motor data, including number of fans and entering- and leaving-air temperatures.
B. Water-Cooled Chillers: Balance water flow through each evaporator and condenser to within specified tolerances of indicated flow, with all pumps operating. With only one chiller operating in a multiple-chiller installation, do not exceed the flow for the maximum tube velocity recommended by the chiller manufacturer. Measure and record the following data with each chiller operating at design conditions:
   1. Evaporator-water entering and leaving temperatures, pressure drop, and water flow.
   2. Condenser-water entering and leaving temperatures, pressure drop, and water flow.
   3. Evaporator and condenser refrigerant temperatures and pressures, using instruments furnished by chiller manufacturer.
   4. Power factor if factory-installed instrumentation is furnished for measuring kilowatts.
   5. Kilowatt input if factory-installed instrumentation is furnished for measuring kilowatts.
   6. Capacity: Calculate in [tons] [kilowatts] ???Insert units??? of cooling.
   7. Efficiency: Calculate operating efficiency for comparison to submitted equipment.

3.20 PROCEDURES FOR COOLING TOWERS

A. Performance Testing: Comply with Cooling tower "AABC Performance Test" in AABC's "National Standards for Total System Balance".

B. Closed-Circuit Cooling Towers: Balance total condenser-water flows to towers and cells. Measure and record the following data:
   1. Condenser-water flow to each cell of the cooling tower.
   2. Pressure drop through each cell.
   3. Entering- and leaving-water temperatures.
   4. Wet- and dry-bulb temperatures of entering air.
   5. Wet- and dry-bulb temperatures of leaving air.
   6. Barometric pressure, wind speed, and wind direction.
   7. Condenser-water flow rate recirculating through the cooling tower.
   8. Cooling-tower spray pump discharge pressure.
   9. Condenser-water flow through bypass.
   10. Makeup-water flow rate.
   11. Makeup water temperature.
   12. Fan, motor, and motor controller operating data.
   13. Cooling-tower spray pump and motor operating data.
   14. Heater operating data.

C. Open-Circuit Cooling Towers: Balance total condenser-water flows to towers and cells. Measure and record the following data:
   1. Condenser-water flow to each cell of the cooling tower.
   2. Pressure at each inlet connection.
   3. Entering- and leaving-water temperatures.
   4. Range.
   5. Makeup-water flow rate.
   6. Makeup water temperature.
   7. Wet- and dry-bulb temperatures of entering air.
   8. Wet- and dry-bulb temperatures of leaving air.
   9. Approach.
   10. Barometric pressure, wind speed, and wind direction.
   11. Fan, motor, and motor controller operating data.
   12. Heater operating data.

3.21 PROCEDURES FOR AIR-COOLED CONDENSING UNITS

A. Verify proper rotation of fan(s).
B. Measure and record entering- and leaving-air temperatures.
C. Measure and record entering and leaving refrigerant pressures.
D. Measure and record operating data of compressor(s), fan(s), and motors.

3.22 PROCEDURES FOR AIR-COOLED CONDENSERS

A. Verify proper rotation of fan(s).
B. Measure and record entering- and leaving-air temperatures.
C. Measure and record entering and leaving refrigerant pressures.
D. Measure and record operating data of fan(s) and motor(s).

3.23 PROCEDURES FOR BOILERS

A. Hydronic Boilers:
   1. Measure and record entering- and leaving-water temperatures.
   2. Measure and record water flow.
   3. Measure and record pressure drop.
   4. [Measure and]Record relief valve(s) pressure setting.
   5. Capacity: Calculate in Btu/h of heating output.
   6. Fuel Consumption: If boiler fuel supply is equipped with flow meter, measure and record consumption.

7. Efficiency: Calculate operating efficiency for comparison to submitted equipment.
8. Fan, motor, and motor controller operating data.

B. Steam Boilers:
1. Measure and record entering-water temperature.
2. Measure and record feedwater flow.
3. Measure and record leaving-steam pressure and temperature.
4. [Measure and]Record relief valve(s) pressure setting.
5. Capacity: Calculate in Btu/h of heating output.
6. Efficiency: Calculate operating efficiency for comparison to submitted equipment.
7. Fan, motor, and motor controller operating data.

C. Boilers with Flue Gas Economizers:
1. Measure and record entering- and leaving-water temperature.
2. Measure and record water flow rate.
3. Measure and record water pressure drop.
4. Heat Recovered: Calculate in Btu/h of waste heat recovered.

3.24 DUCT LEAKAGE TESTS

A. Witness the duct leakage testing performed by Installer.
B. Verify that proper test methods are used and that leakage rates are within specified limits.
C. Report deficiencies observed.

3.25 PIPE LEAKAGE TESTS

A. Witness the pipe pressure testing performed by Installer.
B. Verify that proper test methods are used and that leakage rates are within specified limits.
C. Report deficiencies observed.

3.26 HVAC CONTROLS VERIFICATION

A. In conjunction with system balancing, perform the following:
1. Verify HVAC control system is operating within the design limitations.
2. Confirm that the sequences of operation are in compliance with Contract Documents.
3. Verify that controllers are calibrated and function as intended.
4. Verify that controller set points are as indicated.
5. Verify the operation of lockout or interlock systems.
6. Verify the operation of valve and damper actuators.
7. Verify that controlled devices are properly installed and connected to correct controller.
8. Verify that controlled devices travel freely and are in position indicated by controller: open, closed, or modulating.
9. Verify location and installation of sensors to ensure that they sense only intended temperature, humidity, or pressure.

B. Reporting: Include a summary of verifications performed, remaining deficiencies, and variations from indicated conditions.

C. Operational Tests:
1. Check proper activation of stair-pressurization system(s) in response to all means of activation, both automatic and manual.
2. Verify that each initiating occurrence produces the proper system response under each of the following modes of operation:
a. Normal.
b. Alarm.
c. Manual override.
d. Return to normal.
3. Verify smoke detector at pressurization fan de-energizes fan and closes isolation damper when smoke detector is activated and in alarm.

4. If standby power is provided for pressurization systems, test to verify pressurization systems operate while on both normal and standby power.
5. Check operation in accordance with design indicated.

D. AHJ Tests: Conduct additional tests required by authorities having jurisdiction.

E. Report: Prepare and submit a complete report of observations, measurements, and deficiencies. Include names and contact information of individuals conducting tests and of individuals witnessing tests.

3.27 PROCEDURES FOR TESTING, ADJUSTING, AND BALANCING EXISTING SYSTEMS

A. Perform a preconstruction inspection of existing equipment that is to remain and be reused.
1. Measure and record the operating speed, airflow, and static pressure of each fan and equipment with fan(s).
2. Measure and record flows, temperatures, and pressures of each piece of equipment in each hydronic system. Compare the values to design or nameplate information, where information is available.
3. Measure motor voltage and amperage. Compare the values to motor nameplate information.
4. Check the refrigerant charge.
5. Check the condition of filters.
6. Check the condition of coils.
7. Check the operation of the drain pan and condensate-drain trap.
8. Check bearings and other lubricated parts for proper lubrication.
9. Report on the operating condition of the equipment and the results of the measurements taken. Report deficiencies.

B. TAB After Construction: Before performing testing and balancing of renovated existing systems, inspect existing equipment that is to remain and be reused to verify that existing equipment has been cleaned and refurbished in accordance with renovation scope indicated by Contract Documents. Verify the following:
1. New filters are installed.
2. Coils are clean and fins combed.
3. Drain pans are clean.
4. Fans are clean.
5. Bearings and other parts are properly lubricated.
6. Deficiencies noted in the preconstruction report are corrected.

C. Perform testing and balancing of existing systems to the extent that existing systems are affected by the renovation work.
1. Compare the indicated airflow of the renovated work to the measured fan airflows, and determine the new fan speed and the face velocity of filters and coils.
2. Verify that the indicated airflows of the renovated work result in filter and coil face velocities and fan speeds that are within the acceptable limits defined by equipment manufacturer.
3. If calculations increase or decrease the airflow rates and water flow rates by more than [5] ???Insert number??? percent, make equipment adjustments to achieve the calculated rates. If increase or decrease is [5] ???Insert number??? percent or less, equipment adjustments are not required.
4. Balance each air outlet.

3.28 TOLERANCES

A. Set HVAC system's airflow rates and water flow rates within the following tolerances:
1. Supply, Return, and Exhaust Fans and Equipment with Fans: Plus or minus 10 percent] . If design value is less than 100 cfm, within 10 cfm.
2. Air Outlets and Inlets: Plus or minus 10 percent. If design value is less than 100 cfm, within 10 cfm.
3. Heating-Water Flow Rate: Plus or minus 5 percent. If design value is less than 10 gpm, within 10 percent.
4. Chilled-Water Flow Rate: Plus or minus 5 percent. If design value is less than 10 gpm, within 10 percent.
5. Condenser-Water Flow Rate: Plus or minus 5 percent.

B. Maintaining pressure relationships as designed shall have priority over the tolerances specified above.

3.29 PROGRESS REPORTING

A. Initial Construction-Phase Report: Based on examination of the Contract Documents as specified in "Examination" Article, prepare a report on the adequacy of design for system-balancing devices. Recommend changes and additions to system-balancing devices, to facilitate proper performance measuring and balancing. Recommend changes and additions to HVAC systems and general construction to allow access for performance-measuring and -balancing devices.

B. Status Reports: Prepare weekly progress reports to describe completed procedures, procedures in progress, and scheduled procedures. Include a list of deficiencies and problems found in systems being tested and balanced. Prepare a separate report for each system and each building floor for systems serving multiple floors.

3.30 FINAL REPORT

A. General: Prepare a certified written report; tabulate and divide the report into separate sections for tested systems and balanced systems.
   1. Include a certification sheet at the front of the report's binder, signed and sealed by the certified testing and balancing engineer.
   2. Include a list of instruments used for procedures, along with proof of calibration.
   3. Certify validity and accuracy of field data.

B. Final Report Contents: In addition to certified field-report data, include the following:
   1. Pump curves.
   2. Fan curves.
   3. Manufacturers' test data.
   4. Field test reports prepared by system and equipment installers.
   5. Other information relative to equipment performance; do not include Shop Drawings and Product Data.

C. General Report Data: In addition to form titles and entries, include the following data:
   1. Title page.
   2. Name and address of the TAB specialist.
   3. Project name.
   4. Project location.
   5. Architect's name and address.
   6. Engineer's name and address.
   7. Contractor's name and address.
   8. Report date.
   9. Signature of TAB supervisor who certifies the report.
   10. Table of Contents with the total number of pages defined for each section of the report. Number each page in the report.
   11. Summary of contents, including the following:
      a. Indicated versus final performance.
      b. Notable characteristics of systems.
      c. Description of system operation sequence if it varies from the Contract Documents.
   12. Nomenclature sheets for each item of equipment.
   13. Data for terminal units, including manufacturer's name, type, size, and fittings.
   14. Notes to explain why certain final data in the body of reports vary from indicated values.
   15. Test conditions for fans performance forms, including the following:
      a. Settings for outdoor-, return-, and exhaust-air dampers.
      b. Conditions of filters.
      c. Cooling coil, wet- and dry-bulb conditions.
      d. Heating coil, dry-bulb conditions.
      e. Face and bypass damper settings at coils.
      f. Fan drive settings, including settings and percentage of maximum pitch diameter.
      g. Variable-frequency controller settings for variable-air-volume systems.
      h. Settings for pressure controller(s).

i. Other system operating conditions that affect performance.

16. Test conditions for pump performance forms, including the following:
    a. Variable-frequency controller settings for variable-flow hydronic systems.
    b. Settings for pressure controller(s).
    c. Other system operating conditions that affect performance.

D. System Diagrams: Include schematic layouts of air and hydronic distribution systems. Present each system with single-line diagram and include the following:
1. Quantities of outdoor, supply, return, and exhaust airflows.
2. Water and steam flow rates.
3. Duct, outlet, and inlet sizes.
4. Pipe and valve sizes and locations.
5. Terminal units.
6. Balancing stations.
7. Position of balancing devices.

E. Air-Handling-Unit Test Reports: For air-handling units, include the following:
1. Unit Data:
    a. Unit identification.
    b. Location.
    c. Make and type.
    d. Model number and unit size.
    e. Manufacturer's serial number.
    f. Unit arrangement and class.
    g. Discharge arrangement.
    h. Sheave make, size in inches, and bore.
    i. Center-to-center dimensions of sheave and amount of adjustments in inches.
    j. Number, make, and size of belts.
    k. Number, type, and size of filters.
2. Motor Data:
    a. Motor make, and frame type and size.
    b. Horsepower and speed.
    c. Volts, phase, and hertz.
    d. Full-load amperage and service factor.
    e. Sheave make, size in inches, and bore.
    f. Center-to-center dimensions of sheave and amount of adjustments in inches.
3. Test Data (Indicated and Actual Values):
    a. Total airflow rate in cfm.
    b. Total system static pressure in inches wg.
    c. Fan speed.
    d. Inlet and discharge static pressure in inches wg.
    e. For each filter bank, filter static-pressure differential in inches wg.
    f. Preheat-coil static-pressure differential in inches wg.
    g. Cooling-coil static-pressure differential in inches wg.
    h. Heating-coil static-pressure differential in inches wg.
    i. List for each internal component with pressure-drop, static-pressure differential in inches wg.
    j. Outdoor airflow in cfm.
    k. Return airflow in cfm.
    l. Outdoor-air damper position.
    m. Return-air damper position.
    n. [Vortex damper position].

F. Apparatus-Coil Test Reports:
1. Coil Data:

a. System identification.
b. Location.
c. Coil type.
d. Number of rows.
e. Fin spacing in fins per inch o.c.
f. Make and model number.
g. Face area in sq. ft..
h. Tube size in NPS.
i. Tube and fin materials.
j. Circuiting arrangement.

2. Test Data (Indicated and Actual Values):
   a. Airflow rate in cfm.
   b. Average face velocity in fpm.
   c. Air pressure drop in inches wg.
   d. Outdoor-air, wet- and dry-bulb temperatures in deg F.
   e. Return-air, wet- and dry-bulb temperatures in deg F.
   f. Entering-air, wet- and dry-bulb temperatures in deg F.
   g. Leaving-air, wet- and dry-bulb temperatures in deg F.
   h. Water flow rate in gpm.
   i. Water pressure differential in feet of head or psig.
   j. Entering-water temperature in deg F.
   k. Leaving-water temperature in deg F.
   l. Refrigerant expansion valve and refrigerant types.
   m. Refrigerant suction pressure in psig.
   n. Refrigerant suction temperature in deg F.
   o. Inlet steam pressure in psig.

G. Gas- and Oil-Fired Heat Apparatus Test Reports: In addition to manufacturer's factory startup equipment reports, include the following:
   1. Unit Data:
      a. System identification.
      b. Location.
      c. Make and type.
      d. Model number and unit size.
      e. Manufacturer's serial number.
      f. Fuel type in input data.
      g. Output capacity in Btu/h.
      h. Ignition type.
      i. Burner-control types.
      j. Motor horsepower and speed.
      k. Motor volts, phase, and hertz.
      l. Motor full-load amperage and service factor.
      m. Sheave make, size in inches, and bore.
      n. Center-to-center dimensions of sheave and amount of adjustments in inches.
   2. Test Data (Indicated and Actual Values):
      a. Total airflow rate in cfm.
      b. Entering-air temperature in deg F.
      c. Leaving-air temperature in deg F.
      d. Air temperature differential in deg F.
      e. Entering-air static pressure in inches wg.
      f. Leaving-air static pressure in inches wg.
      g. Air static-pressure differential in inches wg.
      h. Low-fire fuel input in Btu/h.

i. High-fire fuel input in Btu/h.
j. Manifold pressure in psig.
k. High-temperature-limit setting in deg F.
l. Operating set point in Btu/h.
m. Motor voltage at each connection.
n. Motor amperage for each phase.
o. Heating value of fuel in Btu/h.

H. Electric-Coil Test Reports: For electric furnaces, duct coils, and electric coils installed in central-station air-handling units, include the following:
1. Unit Data:
a. System identification.
b. Location.
c. Coil identification.
d. Capacity in Btu/h.
e. Number of stages.
f. Connected volts, phase, and hertz.
g. Rated amperage.
h. Airflow rate in cfm.
i. Face area in sq. ft..
j. Minimum face velocity in fpm.
2. Test Data (Indicated and Actual Values):
a. Heat output in Btu/h.
b. Airflow rate in cfm.
c. Air velocity in fpm.
d. Entering-air temperature in deg F.
e. Leaving-air temperature in deg F.
f. Voltage at each connection.
g. Amperage for each phase.

I. Fan Test Reports: For supply, return, and exhaust fans, include the following:
1. Fan Data:
a. System identification.
b. Location.
c. Make and type.
d. Model number and size.
e. Manufacturer's serial number.
f. Arrangement and class.
g. Sheave make, size in inches, and bore.
h. Center-to-center dimensions of sheave and amount of adjustments in inches.
2. Motor Data:
a. Motor make, and frame type and size.
b. Horsepower and speed.
c. Volts, phase, and hertz.
d. Full-load amperage and service factor.
e. Sheave make, size in inches, and bore.
f. Center-to-center dimensions of sheave and amount of adjustments in inches.
g. Number, make, and size of belts.
3. Test Data (Indicated and Actual Values):
a. Total airflow rate in cfm.
b. Total system static pressure in inches wg.
c. Fan speed.
d. Discharge static pressure in inches wg.
e. Suction static pressure in inches wg.

J. Round, Flat-Oval, and Rectangular Duct Traverse Reports: Include a diagram with a grid representing the duct cross-section and record the following:
   1. Report Data:
      a. System fan and air-handling-unit number.
      b. Location and zone.
      c. Traverse air temperature in deg F.
      d. Duct static pressure in inches wg.
      e. Duct size in inches.
      f. Duct area in sq. ft..
      g. Indicated airflow rate in cfm.
      h. Indicated velocity in fpm.
      i. Actual airflow rate in cfm.
      j. Actual average velocity in fpm.
      k. Barometric pressure in psig.
K. Air-Terminal-Device Reports:
   1. Unit Data:
      a. System and air-handling unit identification.
      b. Location and zone.
      c. Apparatus used for test.
      d. Area served.
      e. Make.
      f. Number from system diagram.
      g. Type and model number.
      h. Size.
      i. Effective area in sq. ft..
   2. Test Data (Indicated and Actual Values):
      a. Airflow rate in cfm.
      b. Air velocity in fpm.
      c. Preliminary airflow rate as needed in cfm.
      d. Preliminary velocity as needed in fpm.
      e. Final airflow rate in cfm.
      f. Final velocity in fpm.
      g. Space temperature in deg F.
L. System-Coil Reports: For reheat coils and water coils of terminal units, include the following:
   1. Unit Data:
      a. System and air-handling-unit identification.
      b. Location and zone.
      c. Room or riser served.
      d. Coil make and size.
      e. Flowmeter type.
   2. Test Data (Indicated and Actual Values):
      a. Airflow rate in cfm.
      b. Entering-water temperature in deg F.
      c. Leaving-water temperature in deg F.
      d. Water pressure drop in feet of head or psig.
      e. Entering-air temperature in deg F.
      f. Leaving-air temperature in deg F.
M. Pump Test Reports: Calculate impeller size by plotting the shutoff head on pump curves, and include the following:
   1. Unit Data:
      a. Unit identification.
      b. Location.

c. Service.
d. Make and size.
e. Model number and serial number.
f. Water flow rate in gpm.
g. Water pressure differential in feet of head or psig.
h. Required net positive suction head in feet of head or psig.
i. Pump speed.
j. Impeller diameter in inches.
k. Motor make and frame size.
l. Motor horsepower and rpm.
m. Voltage at each connection.
n. Amperage for each phase.
o. Full-load amperage and service factor.
p. Seal type.

2. Test Data (Indicated and Actual Values):
   a. Static head in feet of head or psig.
   b. Pump shutoff pressure in feet of head or psig.
   c. Actual impeller size in inches.
   d. Full-open flow rate in gpm.
   e. Full-open pressure in feet of head or psig.
   f. Final discharge pressure in feet of head or psig.
   g. Final suction pressure in feet of head or psig.
   h. Final total pressure in feet of head or psig.
   i. Final water flow rate in gpm.
   j. Voltage at each connection.
   k. Amperage for each phase.

N. Instrument Calibration Reports:
   1. Report Data:
      a. Instrument type and make.
      b. Serial number.
      c. Application.
      d. Dates of use.
      e. Dates of calibration.

3.31 VERIFICATION OF TAB REPORT

A. The TAB specialist's test and balance engineer shall conduct the inspection in the presence of Architect.

B. Architect shall randomly select measurements, documented in the final report, to be rechecked. Rechecking shall be limited to the lesser of either [10] ???Insert number??? percent of the total measurements recorded or the extent of measurements that can be accomplished in[a normal 8-hour business day.

C. If rechecks yield measurements that differ from the measurements documented in the final report by more than the tolerances allowed, the measurements shall be noted as "FAILED."

D. If the number of "FAILED" measurements is greater than 10 percent of the total measurements checked during the final inspection, the TAB shall be considered incomplete and shall be rejected.

E. If recheck measurements find the number of failed measurements noncompliant with requirements indicated, proceed as follows:
   1. TAB specialists shall recheck all measurements and make adjustments. Revise the final report and balancing device settings to include all changes; resubmit the final report and request a second final inspection. All changes shall be tracked to show changes made to previous report.
   2. If the second final inspection also fails, Owner may pursue others Contract options to complete TAB work.

F. Prepare test and inspection reports.

3.32 ADDITIONAL TESTS

A. Within 90 days of completing TAB, perform additional TAB to verify that balanced conditions are being maintained throughout and to correct unusual conditions.

B. Seasonal Periods: If initial TAB procedures were not performed during near-peak summer and winter conditions, perform additional TAB during near-peak summer and winter conditions.

END OF SECTION 230593

SECTION 230713 - DUCT INSULATION

PART 1 GENERAL

1.1 SUMMARY

A. Section includes insulating the following duct services:
   1. Indoor, concealed supply and outdoor air.
   2. Indoor, exposed supply and outdoor air.
   3. Outdoor, concealed supply and return.
   4. Outdoor, exposed supply and return.
B. Related Requirements:
   1. Section 230716 "HVAC Equipment Insulation."
   2. Section 230719 "HVAC Piping Insulation."
   3. Section 233113 "Metal Ducts" for duct liners.

1.2 INFORMATIONAL SUBMITTALS

A. Qualification Data: For qualified Installer.
B. Material Test Reports: From a qualified testing agency acceptable to authorities having jurisdiction indicating, interpreting, and certifying test results for compliance of insulation materials, sealers, attachments, cements, and jackets, with requirements indicated. Include dates of tests and test methods employed.
C. Field quality-control reports.

1.3 QUALITY ASSURANCE

A. Installer Qualifications: Skilled mechanics who have successfully completed an apprenticeship program or craft training program.
B. Mockups: Before installing insulation, build mockups for each type of insulation and finish listed below to demonstrate quality of insulation application and finishes. Build mockups in the location indicated or, if not indicated, as directed by Architect. Use materials indicated for the completed Work.
   1. Ductwork Mockups:
      a. One 10-foot section each of rectangular and round straight duct.
      b. One each of a 90-degree mitered round and rectangular elbow, and one each of a 90-degree radius round and rectangular elbow.
      c. One rectangular branch takeoff and one round branch takeoff from a rectangular duct. One round tee fitting.
      d. One rectangular and round transition fitting.
      e. Four support hangers for round and rectangular ductwork.
      f. Each type of damper and specialty.
   2. For each mockup, fabricate cutaway sections to allow observation of application details for insulation materials, adhesives, mastics, attachments, and jackets.
   3. Notify Architect seven days in advance of dates and times when mockups will be constructed.
   4. Obtain Architect's approval of mockups before starting insulation application.
   5. Approval of mockups does not constitute approval of deviations from the Contract Documents contained in mockups unless Architect specifically approves such deviations in writing.
   6. Maintain mockups during construction in an undisturbed condition as a standard for judging the completed Work.
   7. Demolish and remove mockups when directed.

1.4 DELIVERY, STORAGE, AND HANDLING

A. Packaging: Insulation material containers are to be marked with the manufacturer's name, appropriate ASTM standard designation, type and grade, and maximum use temperature.

1.5 COORDINATION

A. Coordinate sizes and locations of supports, hangers, and insulation shields specified in Section 230529 "Hangers and Supports for HVAC Piping and Equipment."

B. Coordinate clearance requirements with duct Installer for duct insulation application. Before preparing ductwork Shop Drawings, establish and maintain clearance requirements for installation of insulation and field-applied jackets and finishes and for space required for maintenance.

C. Coordinate installation and testing of heat tracing.

1.6 SCHEDULING

A. Schedule insulation application after pressure testing systems and, where required, after installing and testing heat tracing. Insulation application may begin on segments that have satisfactory test results.

PART 2 PRODUCTS

2.1 PERFORMANCE REQUIREMENTS

A. Surface-Burning Characteristics: For insulation and related materials, as determined by testing identical products in accordance with ASTM E84, by a testing agency acceptable to authorities having jurisdiction. Factory label insulation, jacket materials, adhesive, mastic, tapes, and cement material containers with appropriate markings of applicable testing agency.

1. All Insulation Installed Indoors: Flame-spread index of 25 or less, and smoke-developed index of 50 or less.

2. All Insulation Installed Indoors; Outdoors-Installed Insulation in Contact with Airstream: Flame-spread index of 25 or less, and smoke-developed index of 50 or less.

2.2 INSULATION MATERIALS

A. Comply with requirements in "Duct Insulation Schedule, General," "Indoor Duct and Plenum Insulation Schedule," and "Aboveground, Outdoor Duct and Plenum Insulation Schedule" articles for where insulating materials are to be applied.

B. Products do not contain asbestos, lead, mercury, or mercury compounds.

C. Products that come in contact with stainless steel have a leachable chloride content of less than 50 ppm when tested in accordance with ASTM C871.

D. Insulation materials for use on austenitic stainless steel are qualified as acceptable in accordance with ASTM C795.

E. Foam insulation materials do not use CFC or HCFC blowing agents in the manufacturing process.

F. Flexible Elastomeric: Closed-cell or expanded-rubber materials; suitable for maximum use temperature between minus 70 deg F and 220 deg F. Comply with ASTM C534, Type II for sheet materials.

G. Glass-Fiber Blanket: Glass fibers bonded with a thermosetting resin; suitable for maximum use temperature up to 450 deg F in accordance with ASTM C411. Comply with ASTM C553, Type II, and ASTM C1290, Type I, unfaced. Factory-applied jacket requirements are specified in "Factory-Applied Jackets" Article.

H. High-Temperature, Glass-Fiber Blanket: Glass fibers bonded with a thermosetting resin, unfaced; suitable for maximum use temperature up to 1000 deg F. Comply with ASTM C553, Type V.

I. Mineral Wool Blanket: Basalt volcanic rock-derived fibers bonded with a thermosetting resin, unfaced; suitable for maximum use temperature up to 1200 deg F in accordance with ASTM C447. Comply with ASTM C553.

J. Glass-Fiber Board Insulation: Glass fibers bonded with a thermosetting resin; suitable for maximum use temperature between 35 deg F and 250 deg F for jacketed and between 35 deg F and 450 deg F for unfaced in accordance with ASTM C411. Comply with ASTM C612, Type IA or Type IB. For duct and plenum applications, provide insulation with factory-applied FSK jacket. Factory-applied jacket requirements are specified in "Factory-Applied Jackets" Article.

K. High-Temperature, Glass-Fiber Board: Glass fibers bonded with a thermosetting resin; suitable for maximum use temperature up to 1000 deg F in accordance with ASTM C411. Comply with ASTM C612, Type III, unfaced.

L. Mineral Wool Board: Basalt volcanic rock-derived fibers bonded with a thermosetting resin; suitable for maximum use temperature up to 1100 deg F in accordance with ASTM C411. Comply with ASTM C612, Type III, unfaced.

M. Glass-Fiber, Pipe and Tank: Glass fibers bonded with a thermosetting resin; suitable for maximum use temperature between 35 deg F and 850 deg F, in accordance with ASTM C411. Comply with ASTM C1393.

1. Semirigid board material with factory-applied FSK jacket.
2. Factory-applied jacket requirements are specified in "Factory-Applied Jackets" Article.

N. Mineral Wool, Pipe and Tank: Mineral wool fibers bonded with a thermosetting resin; suitable for maximum use temperature up to 1000 deg F, in accordance with ASTM C411. Comply with ASTM C1393.

1. Semirigid board material with factory-applied FSK jacket.
2. Factory-applied jacket requirements are specified in "Factory-Applied Jackets" Article.

O. Polyolefin: Polyethylene thermal plastic insulation. Comply with ASTM C1427, Type I, Grade 1 for tubular materials and Type II, Grade 1 for sheet materials.

2.3 FIRE-RATED INSULATION SYSTEMS

A. Fire-Rated Board: Structural-grade, press-molded, xonolite calcium silicate, fireproofing board suitable for operating temperatures up to 1700 deg F. Comply with ASTM C656, Type II, Grade 6. Tested and certified to provide a 2-hour fire rating by an NRTL acceptable to authorities having jurisdiction.

B. Fire-Rated Blanket: High-temperature, flexible, blanket insulation with FSK jacket that is tested and certified to provide a 2-hour fire rating by an NRTL acceptable to authorities having jurisdiction.

2.4 ADHESIVES

A. Materials are compatible with insulation materials, jackets, and substrates and for bonding insulation to itself and to surfaces to be insulated unless otherwise indicated.

B. Flexible Elastomeric and Polyolefin Adhesive: Comply with MIL-A-24179A, Type II, Class I.

C. Glass-Fiber and Mineral Wool Adhesive: Comply with MIL-A-3316C, Class 2, Grade A.

D. ASJ Adhesive, and FSK Jacket Adhesive: Comply with MIL-A-3316C, Class 2, Grade A for bonding insulation jacket lap seams and joints.

E. PVC Jacket Adhesive: Compatible with PVC jacket.

2.5 MASTICS AND COATINGS

A. Materials are compatible with insulation materials, jackets, and substrates.

B. Vapor-Retarder Mastic, Water Based, Interior Use: Suitable for indoor use on below ambient services.

1. Water-Vapor Permeance: Comply with ASTM C755, Section 7.2.2, Table 2, for insulation type and service conditions.
2. Service Temperature Range: Minus 20 to plus 180 deg F.
3. Comply with MIL-PRF-19565C, Type II, for permeance requirements, with supplier listing on DOD QPD - Qualified Products Database.
4. Color: White.

C. Vapor-Retarder Mastic, Solvent Based, Interior Use: Suitable for indoor use on below ambient services.

1. Water-Vapor Permeance: Comply with ASTM C755, Section 7.2.2, Table 2, for insulation type and service conditions.
2. Service Temperature Range: 0 to 180 deg F.
3. Color: ???Insert color???.

D. Vapor-Retarder Mastic, Solvent Based, Exterior Use: Suitable for outdoor use on below ambient services.

1. Water-Vapor Permeance: Comply with ASTM C755, Section 7.2.2, Table 2, for insulation type and service conditions.
2. Service Temperature Range: Minus 50 to plus 220 deg F.
3. Color: White.

E. Breather Mastic: Water based; suitable for indoor and outdoor use on above ambient services.

1. Water-Vapor Permeance: ASTM E96/E96M, greater than 1.0 perm at manufacturer's recommended dry film thickness.
2. Service Temperature Range: Minus 20 to plus 180 deg F.

3. Color: White.

2.6 SEALANTS

A. FSK and Metal Jacket Flashing Sealants:
1. Materials are compatible with insulation materials, jackets, and substrates.
2. Fire- and water-resistant, flexible, elastomeric sealant.
3. Service Temperature Range: Minus 40 to plus 250 deg F.
4. Color: Aluminum.

2.7 FACTORY-APPLIED JACKETS

A. Insulation system schedules indicate factory-applied jackets on various applications. When factory-applied jackets are indicated, comply with the following:
1. ASJ: White, kraft-paper, fiberglass-reinforced scrim with aluminum-foil backing; complying with ASTM C1136, Type I.
2. ASJ-SSL: ASJ with self-sealing, pressure-sensitive, acrylic-based adhesive covered by a removable protective strip; complying with ASTM C1136, Type I.
3. FSK Jacket: Aluminum-foil, fiberglass-reinforced scrim with kraft-paper backing; complying with ASTM C1136, Type II.
4. FSP Jacket: Aluminum-foil, fiberglass-reinforced scrim with polyethylene backing; complying with ASTM C1136, Type II.
5. Vinyl Jacket: White vinyl with a permeance of 1.3 perms when tested in accordance with ASTM E96/E96M, Procedure A, and complying with NFPA 90A and NFPA 90B.
6. ASJ+: All-service jacket composed of aluminum foil reinforced with glass scrim bonded to a kraft paper interleaving with an outer film leaving no paper exposed; complying with ASTM C1136, Types I, II, III, IV, and VII.
7. PSK Jacket: Aluminum foil, fiberglass-reinforced scrim with polyethylene backing; complying with ASTM C1136, Type II.

2.8 FIELD-APPLIED JACKETS

A. Field-applied jackets comply with ASTM C921, Type I, unless otherwise indicated.
B. FSK Jacket: Aluminum-foil-face, fiberglass-reinforced scrim with kraft-paper backing.
C. PVC Jacket: High-impact-resistant, UV-resistant PVC complying with ASTM D1784, Class 16354-C; thickness as scheduled; roll stock ready for shop or field cutting and forming. Thickness is indicated in field-applied jacket schedules.
1. Adhesive: As recommended by jacket material manufacturer.
2. Color: White.
D. Metal Jacket:
1. Aluminum Jacket: Comply with ASTM B209, Alloy 3003, 3005, 3105, or 5005, Temper H-14.
a. Sheet and roll stock ready for shop or field sizing.
b. Finish and thickness are indicated in field-applied jacket schedules.
c. Moisture Barrier for Indoor Applications: 1-mil-thick, heat-bonded polyethylene and kraft paper.
d. Moisture Barrier for Outdoor Applications: 3-mil-thick, heat-bonded polyethylene and kraft paper.
2. Stainless Steel Jacket: ASTM A240/A240M.
a. Sheet and roll stock ready for shop or field sizing.
b. Material, finish, and thickness are indicated in field-applied jacket schedules.
c. Moisture Barrier for Indoor Applications: 1-mil-thick, heat-bonded polyethylene and kraft paper.
d. Moisture Barrier for Outdoor Applications: 3-mil-thick, heat-bonded polyethylene and kraft paper.
E. Self-Adhesive Outdoor Jacket (Asphaltic): 60-mil-thick, laminated vapor barrier and waterproofing membrane for installation over insulation located aboveground outdoors; consisting of a rubberized bituminous resin on a crosslaminated polyethylene film covered with white aluminum-foil facing.

F. elf-Adhesive Indoor/Outdoor Jacket (Non-Asphaltic): Vapor barrier and waterproofing jacket for installation over insulation located aboveground outdoors or indoors. Specialized jacket has five layers of laminated aluminum and polyester film with low-temperature acrylic pressure-sensitive adhesive. Outer aluminum surface is coated with UV-resistant coating for protection from environmental contaminants.
   1. Permeance: 0.00 perm as tested in accordance with ASTM F1249.
   2. Flamespread/Smoke Developed: 25/50 as tested in accordance with ASTM E84.
   3. Aluminum Finish: Embossed.

2.9 FIELD-APPLIED FABRIC-REINFORCING MESH

A. Woven Glass-Fiber Mesh: Approximately 6 oz./sq. yd. with a thread count of 5 strands by 5 strands/sq. in. for covering ducts.
B. Woven Polyester Mesh: Approximately 1 oz./sq. yd. with a thread count of 10 strands by 10 strands/sq. in., in a Leno weave, for ducts.

2.10 TAPES

A. FSK Tape: Foil-face, vapor-retarder tape matching factory-applied jacket with acrylic adhesive; complying with ASTM C1136.
   1. Width: 3 inches.
   2. Thickness: 6.5 mils.
   3. Adhesion: 90 ounces force/inch in width.
   4. Elongation: 2 percent.
   5. Tensile Strength: 40 lbf/inch in width.
   6. FSK Tape Disks and Squares: Precut disks or squares of FSK tape.
B. PVC Tape: White vapor-retarder tape matching field-applied PVC jacket with acrylic adhesive; suitable for indoor and outdoor applications.
   1. Width: 2 inches
   2. Thickness: 6 mils.
   3. Adhesion: 64 ounces force/inch in width.
   4. Elongation: 500 percent.
   5. Tensile Strength: 18 lbf/inchin width.
C. Aluminum-Foil Tape: Vapor-retarder tape with acrylic adhesive.
   1. Width: 2 inches.
   2. Thickness: 3.7 mils.
   3. Adhesion: 100 ounces force/inch in width.
   4. Elongation: 5 percent.
   5. Tensile Strength: 34 lbf/inch in width.

2.11 SECUREMENTS

A. Bands:
   1. Stainless Steel: ASTM A240/A240M, Type 304; 0.015 inch thick, 1/2 inch wide with wing seal.
   2. Aluminum: ASTM B209, Alloy 3003, 3005, 3105, or 5005; Temper H-14, 0.020 inch thick, wide with closed seal
   3. Springs: Twin spring set constructed of stainless steel with ends flat and slotted to accept metal bands. Spring size determined by manufacturer for application.
B. Insulation Pins and Hangers:
   1. Capacitor-Discharge-Weld Pins: Copper- or zinc-coated steel pin, fully annealed for capacitor-discharge welding, 0.106-inch-diameter shank, length to suit depth of insulation indicated.
   2. Cupped-Head, Capacitor-Discharge-Weld Pins: Copper- or zinc-coated steel pin, fully annealed for capacitor-discharge welding, 0.106-inch-diameter shank, length to suit depth of insulation indicated with integral 1-1/2-inch galvanized carbon-steel washer.
   3. Metal, Adhesively Attached, Perforated-Base Insulation Hangers: Baseplate welded to projecting spindle that is capable of holding insulation, of thickness indicated, securely in position indicated when self-locking washer is in place. Comply with the following requirements:
      a. Baseplate: Perforated, galvanized carbon-steel sheet, 0.030 inch thick by 2 inches square.

b. Spindle: Aluminum, fully annealed, 0.106-inch-diameter shank, length to suit depth of insulation indicated.

c. Adhesive: Recommended by hanger manufacturer. Product with demonstrated capability to bond insulation hanger securely to substrates indicated without damaging insulation, hangers, and substrates.

4. Nonmetal, Adhesively Attached, Perforated-Base Insulation Hangers: Baseplate fastened to projecting spindle that is capable of holding insulation, of thickness indicated, securely in position indicated when self-locking washer is in place. Comply with the following requirements:

a. Baseplate: Perforated, nylon sheet, 0.030 inch thick by 1-1/2 inches in diameter.

b. Spindle: Nylon, 0.106-inch-diameter shank, length to suit depth of insulation indicated, up to 2-1/2 inches.

c. Adhesive: Recommended by hanger manufacturer. Product with demonstrated capability to bond insulation hanger securely to substrates indicated without damaging insulation, hangers, and substrates.

5. Self-Sticking-Base Insulation Hangers: Baseplate welded to projecting spindle that is capable of holding insulation, of thickness indicated, securely in position indicated when self-locking washer is in place. Comply with the following requirements:

a. Baseplate: Galvanized carbon-steel sheet, 0.030 inch thick by 2 inches square.

b. Spindle: Copper- or zinc-coated, low-carbon steel, fully annealed, 0.106-inch-diameter shank, length to suit depth of insulation indicated.

c. Adhesive-backed base with a peel-off protective cover.

6. Insulation-Retaining Washers: Self-locking washers formed from 0.016-inch-thick, galvanized-steel sheet, with beveled edge sized as required to hold insulation securely in place but not less than 1-1/2 inches in diameter.

a. Protect ends with capped self-locking washers incorporating a spring steel insert to ensure permanent retention of cap in exposed locations.

7. Nonmetal Insulation-Retaining Washers: Self-locking washers formed from 0.016-inch-thick nylon sheet, with beveled edge sized as required to hold insulation securely in place but not less than 1-1/2 inches in diameter.

C. Staples: Outward-clinching insulation staples, nominal 3/4-inch-wide, stainless steel or Monel.

D. Wire: 0.080-inch nickel-copper alloy.

2.12 CORNER ANGLES

A. PVC Corner Angles: 30 milsthick, minimum 1 by 1 inch, PVC in accordance with ASTM D1784, Class 16354-C. White or color-coded to match adjacent surface.

B. Aluminum Corner Angles: 0.040 inch thick, minimum 1 by 1 inch, aluminum in accordance with ASTM B209, Alloy 3003, 3005, 3105, or 5005; Temper H-14.

C. Stainless Steel Corner Angles: 0.024 inch thick, minimum 1 by 1 inch, stainless steel in accordance with ASTM A240/A240M, Type 304.

PART 3 EXECUTION

3.1 EXAMINATION

A. Examine substrates and conditions for compliance with requirements for installation tolerances and other conditions affecting performance of insulation application.

1. Verify that systems to be insulated have been tested and are free of defects.

2. Verify that surfaces to be insulated are clean and dry.

B. Proceed with installation only after unsatisfactory conditions have been corrected.

3.2 PREPARATION

A. Surface Preparation: Clean and dry surfaces to receive insulation. Remove materials that will adversely affect insulation application.

3.3 GENERAL INSTALLATION REQUIREMENTS

A. Install insulation materials, accessories, and finishes with smooth, straight, and even surfaces; free of voids throughout the length of ducts and fittings.

B. Install insulation materials, vapor barriers or retarders, jackets, and thicknesses required for each item of duct system as specified in insulation system schedules.

C. Install accessories compatible with insulation materials and suitable for the service. Install accessories that do not corrode, compress, or otherwise damage insulation or jacket.

D. Install insulation with longitudinal seams at top and bottom of horizontal runs.

E. Install multiple layers of insulation with longitudinal and end seams staggered.

F. Keep insulation materials dry during application and finishing. Replace insulation materials that get wet during storage or in the installation process before being properly covered and sealed in accordance with Contract Documents.

G. Install insulation with tight longitudinal seams and end joints. Bond seams and joints with adhesive recommended by insulation material manufacturer.

H. Install insulation with least number of joints practical.

I. Where vapor barrier is indicated, seal joints, seams, and penetrations in insulation at hangers, supports, anchors, and other projections with vapor-barrier mastic.

   1. Install insulation continuously through hangers and around anchor attachments.
   2. For insulation application where vapor barriers are indicated, extend insulation on anchor legs from point of attachment to supported item to point of attachment to structure. Taper and seal ends at attachment to structure with vapor-barrier mastic.
   3. Install insert materials and install insulation to tightly join the insert. Seal insulation to insulation inserts with adhesive or sealing compound recommended by insulation material manufacturer.

J. Apply adhesives, mastics, and sealants at manufacturer's recommended coverage rate and wet and dry film thicknesses.

K. Install insulation with factory-applied jackets as follows:

   1. Draw jacket tight and smooth, but not to the extent of creating wrinkles or areas of compression in the insulation.
   2. Cover circumferential joints with 3-inch-wide strips, of same material as insulation jacket. Secure strips with adhesive and outward clinching staples along both edges of strip, spaced 4 inches o.c.
   3. Overlap jacket longitudinal seams at least 1-1/2 inches. Clean and dry surface to receive self-sealing lap. Staple laps with outward clinching staples along edge at o.c.
      a. For below ambient services, apply vapor-barrier mastic over staples.
   4. Cover joints and seams with tape, according to insulation material manufacturer's written instructions, to maintain vapor seal.
   5. Where vapor barriers are indicated, apply vapor-barrier mastic on seams and joints and at ends adjacent to duct flanges and fittings.

L. Cut insulation in a manner to avoid compressing insulation.

M. Finish installation with systems at operating conditions. Repair joint separations and cracking due to thermal movement.

N. Repair damaged insulation facings by applying same facing material over damaged areas. Extend patches at least 4 inches beyond damaged areas. Adhere, staple, and seal patches similar to butt joints.

3.4 PENETRATIONS

A. Insulation Installation at Roof Penetrations: Install insulation continuously through roof penetrations.

   1. Seal penetrations with flashing sealant.
   2. For applications requiring only indoor insulation, terminate insulation above roof surface and seal with joint sealant. For applications requiring indoor and outdoor insulation, install insulation for outdoor applications tightly joined to indoor insulation ends. Seal joint with joint sealant.
   3. Extend jacket of outdoor insulation outside roof flashing at least 2 inches below top of roof flashing.
   4. Seal jacket to roof flashing with flashing sealant.

B. Insulation Installation at Aboveground Exterior Wall Penetrations: Install insulation continuously through wall penetrations.

   1. Seal penetrations with flashing sealant.

2. For applications requiring only indoor insulation, terminate insulation inside wall surface and seal with joint sealant. For applications requiring indoor and outdoor insulation, install insulation for outdoor applications tightly joined to indoor insulation ends. Seal joint with joint sealant.
3. Extend jacket of outdoor insulation outside wall flashing and overlap wall flashing at least 2 inches.
4. Seal jacket to wall flashing with flashing sealant.

C. Insulation Installation at Interior Wall and Partition Penetrations (That Are Not Fire Rated): Install insulation continuously through walls and partitions.

D. Insulation Installation at Fire-Rated Wall and Partition Penetrations: Terminate insulation at fire damper sleeves for fire-rated wall and partition penetrations. Externally insulate damper sleeves to match adjacent insulation and overlap duct insulation at least 2 inches.
1. Comply with requirements in Section 078413 "Penetration Firestopping."

E. Insulation Installation at Floor Penetrations:
1. Duct: For penetrations through fire-rated assemblies, terminate insulation at fire damper sleeves and externally insulate damper sleeve beyond floor to match adjacent duct insulation. Overlap damper sleeve and duct insulation at least 2 inches.
2. Seal penetrations through fire-rated assemblies. Comply with requirements in Section 078413 "Penetration Firestopping."

3.5 INSTALLATION OF FLEXIBLE ELASTOMERIC AND POLYOLEFIN INSULATION

A. Comply with manufacturer's written installation instructions and ASTM C1710.

B. Seal longitudinal seams and end joints with manufacturer's recommended adhesive to eliminate openings in insulation that allow passage of air to surface being insulated.

C. Square and Rectangular Ducts and Plenums:
1. Provide 1/4 inch more per side for a tight, compression fit.
2. Cut sheet insulation with the following dimensions:
a. Width of duct plus 1/4 inch, one piece.
b. Height of duct plus 1/4 inch, plus thickness of insulation, two pieces.
c. Width of duct plus 1/4 inch, plus two times the thickness of insulation, one piece.
3. Insulate the bottom of the duct with the sheet from (a) above, then the sides with the two sheets from (b) above, and finally the top of the duct with the sheet from (c) above.
4. Insulation without self-adhering backing:
a. Apply 100 percent coverage of manufacturer adhesive on the metal surface, then the insulation, except for the last 1/4 inch where sheets will butt together.
b. Roll sheet down into position.
c. Press two sheets together under compression and apply adhesive at the butt joint to seal the two sheets together.
5. Insulation with self-adhering backing:
a. Peel back release paper in 6- to 8-inch increments and line up sheet.
b. Press firmly to activate adhesive.
c. Align material and continue to line up correctly, pressing firmly while slowly removing release paper.
d. Allow 1/4-inch overlap for compression at butt joints.
e. Apply adhesive at the butt joint to seal the two sheets together.
6. Insulate duct brackets following manufacturer's written installation instructions.

D. Circular Ducts:
1. Determine the circumference of the duct, using a strip of insulation the same thickness as to be used.
2. Cut the sheet to the required size.
3. Apply 100 percent coverage of manufacturer adhesive on the metal surface then the insulation.
4. Apply manufacturer adhesive to the cut surfaces along 100 percent of the longitudinal seam. Press together the seam at the ends and then the middle. Close the entire seam starting from the middle.

3.6 INSTALLATION OF GLASS-FIBER AND MINERAL-WOOL INSULATION

A. Blanket Insulation Installation on Ducts and Plenums: Secure with adhesive and insulation pins.

B. Comply with manufacturer's written installation instructions.
   1. Apply adhesives according to manufacturer's recommended coverage rates per unit area, for 100 percent coverage of duct and plenum surfaces.
   2. Apply adhesive to entire circumference of ducts and to all surfaces of fittings and transitions.
   3. Install either capacitor-discharge-weld pins and speed washers or cupped-head, capacitor-discharge-weld pins on sides and bottom of horizontal ducts and sides of vertical ducts as follows:
      a. On duct sides with dimensions 18 inches and smaller, place pins along longitudinal centerline of duct. Space 3 inches maximum from insulation end joints, and 16 inches o.c.
      b. On duct sides with dimensions larger than 18 inches, place pins 16 inches o.c. each way, and 3 inches maximum from insulation joints. Install additional pins to hold insulation tightly against surface at cross bracing.
      c. Pins may be omitted from top surface of horizontal, rectangular ducts and plenums.
      d. Do not overcompress insulation during installation.
      e. Impale insulation over pins and attach speed washers.
      f. Cut excess portion of pins extending beyond speed washers or bend parallel with insulation surface. Cover exposed pins and washers with tape matching insulation facing.
   4. For ducts and plenums with surface temperatures below ambient, install a continuous unbroken vapor barrier. Create a facing lap for longitudinal seams and end joints with insulation by removing 2 inches from one edge and one end of insulation segment. Secure laps to adjacent insulation section with 1/2-inch outward-clinching staples, 1 inch o.c. Install vapor barrier consisting of factory- or field-applied jacket, adhesive, vapor-barrier mastic, and sealant at joints, seams, and protrusions.
      a. Repair punctures, tears, and penetrations with tape or mastic to maintain vapor-barrier seal.
      b. Install vapor stops for ductwork and plenums operating below 50 deg F at 18-foot intervals. Vapor stops consist of vapor-barrier mastic applied in a Z-shaped pattern over insulation face, along butt end of insulation, and over the surface. Cover insulation face and surface to be insulated a width equal to two times the insulation thickness, but not less than 3 inches.
   5. Overlap unfaced blankets a minimum of 2 inches on longitudinal seams and end joints. At end joints, secure with steel bands spaced a maximum of 18 inches o.c.
   6. Install insulation on rectangular duct elbows and transitions with a full insulation section for each surface. Install insulation on round and flat-oval duct elbows with individually mitered gores cut to fit the elbow.
   7. Insulate duct stiffeners, hangers, and flanges that protrude beyond insulation surface with 6-inch-wide strips of same material used to insulate duct. Secure on alternating sides of stiffener, hanger, and flange with pins spaced 6 inches o.c.
C. Board Insulation Installation on Ducts and Plenums: Secure with adhesive and insulation pins.
   1. Apply adhesives according to manufacturer's recommended coverage rates per unit area, for 100 percent coverage of duct and plenum surfaces.
   2. Apply adhesive to entire circumference of ducts and to all surfaces of fittings and transitions.
   3. Install either capacitor-discharge-weld pins and speed washers or cupped-head, capacitor-discharge-weld pins on sides and bottom of horizontal ducts and sides of vertical ducts as follows:
      a. On duct sides with dimensions 18 inches and smaller, place pins along longitudinal centerline of duct. Space 3 inches maximum from insulation end joints, and 16 inches o.c.
      b. On duct sides with dimensions larger than 18 inches, space pins 16 inches o.c. each way, and 3 inches maximum from insulation joints. Install additional pins to hold insulation tightly against surface at cross bracing.
      c. Pins may be omitted from top surface of horizontal, rectangular ducts and plenums.
      d. Do not overcompress insulation during installation.
      e. Cut excess portion of pins extending beyond speed washers or bend parallel with insulation surface. Cover exposed pins and washers with tape matching insulation facing.
   4. For ducts and plenums with surface temperatures below ambient, install a continuous unbroken vapor barrier. Create a facing lap for longitudinal seams and end joints with insulation by removing 2 inches from one edge and one end of insulation segment. Secure laps to adjacent insulation section with 1/2-inch outward-clinching staples, 1 inch o.c. Install vapor barrier consisting of factory- or field-applied jacket, adhesive, vapor-barrier mastic, and sealant at joints, seams, and protrusions.
      a. Repair punctures, tears, and penetrations with tape or mastic to maintain vapor-barrier seal.

b. Install vapor stops for ductwork and plenums operating below 50 deg F at 18-foot intervals. Vapor stops consist of vapor-barrier mastic applied in a Z-shaped pattern over insulation face, along butt end of insulation, and over the surface. Cover insulation face and surface to be insulated a width equal to two times the insulation thickness, but not less than 3 inches.

5. Install insulation on rectangular duct elbows and transitions with a full insulation section for each surface. Groove and score insulation to fit as closely as possible to outside and inside radius of elbows. Install insulation on round and flat-oval duct elbows with individually mitered gores cut to fit the elbow.

6. Insulate duct stiffeners, hangers, and flanges that protrude beyond insulation surface with 6-inch-wide strips of same material used to insulate duct. Secure on alternating sides of stiffener, hanger, and flange with pins spaced 6 inches o.c.

3.7 FIELD-APPLIED JACKET INSTALLATION

A. Where glass-cloth jackets are indicated, install directly over bare insulation or insulation with factory-applied jackets.

1. Draw jacket smooth and tight to surface with 2-inch overlap at seams and joints.
2. Embed glass cloth between two 0.062-inch-thick coats of lagging adhesive.
3. Completely encapsulate insulation with coating, leaving no exposed insulation.

B. Where FSK jackets are indicated, install as follows:

1. Draw jacket material smooth and tight.
2. Install lap or joint strips with same material as jacket.
3. Secure jacket to insulation with manufacturer's recommended adhesive.
4. Install jacket with 1-1/2-inch laps at longitudinal seams and 3-inch-wide joint strips at end joints.
5. Seal openings, punctures, and breaks in vapor-retarder jackets and exposed insulation with vapor-barrier mastic.

C. Where PVC jackets are indicated, install with 1-inch overlap at longitudinal seams and end joints; for horizontal applications, install with longitudinal seams along top and bottom of tanks and vessels. Seal with manufacturer's recommended adhesive.

1. Apply two continuous beads of adhesive to seams and joints, one bead under lap and the finish bead along seam and joint edge.

D. Where metal jackets are indicated, install with 2-inch overlap at longitudinal seams and end joints. Overlap longitudinal seams arranged to shed water. Seal end joints with weatherproof sealant recommended by insulation manufacturer. Secure jacket with stainless steel bands 12 inches o.c. and at end joints.

3.8 FIRE-RATED INSULATION SYSTEM INSTALLATION

A. Comply with manufacturer's written installation instructions.

B. Where fire-rated insulation system is indicated, secure system to ducts and duct hangers and supports to maintain a continuous fire rating.

C. Insulate duct access panels and doors to achieve same fire rating as duct.

D. Install firestopping at penetrations through fire-rated assemblies. Fire-stop systems are specified in Section 078413 "Penetration Firestopping."

3.9 FINISHES

A. Insulation with ASJ, Glass-Cloth, or Other Paintable Jacket Material: Paint jacket with paint system identified below and as specified in Section 099113 "Exterior Painting" and Section 099123 "Interior Painting."

1. Flat Acrylic Finish: Two finish coats over a primer that is compatible with jacket material and finish coat paint. Add fungicidal agent to render fabric mildew proof.

a. Finish Coat Material: Interior, flat, latex-emulsion size.

B. Flexible Elastomeric Thermal Insulation: After adhesive has fully cured, apply two coats of insulation manufacturer's recommended protective coating.

C. Color: Final color as selected by Architect. Vary first and second coats to allow visual inspection of the completed Work.

D. Do not field paint aluminum or stainless steel jackets.

3.10 FIELD QUALITY CONTROL

A. Testing Agency: Engage a qualified testing agency to perform tests and inspections.
B. Perform tests and inspections.
C. Tests and Inspections:
   1. Inspect ductwork, randomly selected by Architect, by removing field-applied jacket and insulation in layers in reverse order of their installation. Extent of inspection is limited to one location(s) for each duct system defined in the "Duct Insulation Schedule, General" Article.
D. All insulation applications will be considered defective Work if sample inspection reveals noncompliance with requirements.

3.11 DUCT INSULATION SCHEDULE, GENERAL

A. Plenums and Ducts Requiring Insulation:
   1. Indoor, concealed supply and outdoor air.
   2. Indoor, exposed supply and outdoor air.
   3. Indoor, concealed return located in unconditioned space.
   4. Indoor, exposed return located in unconditioned space.
   5. Indoor, concealed, Type I, commercial, kitchen hood exhaust.
   6. Indoor, exposed, Type I, commercial, kitchen hood exhaust.
   7. Indoor, concealed oven and warewash exhaust.
   8. Indoor, exposed oven and warewash exhaust.
   9. Indoor, concealed exhaust between isolation damper and penetration of building exterior.
   10. Indoor, exposed exhaust between isolation damper and penetration of building exterior.
   11. Outdoor, concealed supply and return.
   12. Outdoor, exposed supply and return.
B. Items Not Insulated:
   1. Fibrous-glass ducts.
   2. Metal ducts with duct liner of sufficient thickness to comply with energy code and ASHRAE/IESNA 90.1.
   3. Factory-insulated flexible ducts.
   4. Factory-insulated plenums and casings.
   5. Flexible connectors.
   6. Vibration-control devices.
   7. Factory-insulated access panels and doors.

3.12 INDOOR DUCT AND PLENUM INSULATION SCHEDULE

A. Concealed, round and flat-oval, supply-air duct insulation is one of the following:
   1. Flexible Elastomeric: 1 inch ???Insert dimension??? thick.
   2. Glass-Fiber Blanket: 3 inches thick and 3 lb/cu. ft. nominal density.
B. Concealed, round and flat-oval, return-air duct insulation is one of the following:
   1. Flexible Elastomeric: 1 inch ???Insert dimension??? thick.
   2. Glass-Fiber Blanket: 3 inches thick and 3 lb/cu. ft. nominal density.
C. Concealed, round and flat-oval, outdoor-air duct insulation is one of the following:
   1. Flexible Elastomeric: 1 inch ???Insert dimension??? thick.
   2. Glass-Fiber Blanket: 3 inches thick and 3 lb/cu. ft. nominal density.
D. Concealed, round and flat-oval, exhaust-air duct insulation is the following:
   1. Flexible Elastomeric: 1 inchhick.
   2. Glass-Fiber Blanket: 3 inches thick and 3 lb/cu. ft. nominal density.
E. Concealed, rectangular, supply-air duct insulation is the following:
   1. Flexible Elastomeric: 1 inchhick.
   2. Glass-Fiber Blanket: 3 inches thick and 3 lb/cu. ft. nominal density.
F. Concealed, rectangular, return-air duct insulation is the following:
   1. Flexible Elastomeric: 1 inchhick.

2. Glass-Fiber Blanket: 3 inches thick and 3 lb/cu. ft. nominal density.

3.13 ABOVEGROUND, OUTDOOR DUCT AND PLENUM INSULATION SCHEDULE

A. Insulation materials and thicknesses are identified below. If more than one material is listed for a duct system, selection from materials listed is Contractor's option.
B. Concealed, round and flat-oval, supply-air duct insulation is one of the following:
   1. Flexible Elastomeric: 1 inchhick.
   2. Glass-Fiber Blanket: 3 inches thick and 3 lb/cu. ft. nominal density.
C. Concealed, round and flat-oval, return-air duct insulation is one of the following:
   1. Flexible Elastomeric: 1 inchhick.
   2. Glass-Fiber Blanket: 3 inches thick and 3 lb/cu. ft. nominal density.
D. Concealed, round and flat-oval, outdoor-air duct insulation is one of the following:
   1. Flexible Elastomeric: 1 inchhick.
   2. Glass-Fiber Blanket: 3 inches thick and 3 lb/cu. ft. nominal density.
E. Concealed, rectangular, supply-air duct insulation is one of the following:
   1. Flexible Elastomeric: 1 inchhick.
   2. Glass-Fiber Blanket: 3 inches thick and 3 lb/cu. ft. nominal density.
F. Concealed, rectangular, return-air duct insulation is one of the following:
   1. Flexible Elastomeric: 1 inchhick.
   2. Glass-Fiber Blanket: 3 inches thick and 3 lb/cu. ft. nominal density.
G. Concealed, supply-air plenum insulation is one of the following:
   1. Flexible Elastomeric: 1 inchhick.
   2. Glass-Fiber Blanket: 3 inches thick and 3 lb/cu. ft. nominal density.
H. Concealed, return-air plenum insulation is one of the following:
   1. Flexible Elastomeric: 1 inchhick.
   2. Glass-Fiber Blanket: 3 inches thick and 3 lb/cu. ft. nominal density.
I. Exposed, round and flat-oval, supply-air duct insulation is one of the following:
   1. Flexible Elastomeric: 1 inchhick.
   2. Glass-Fiber Blanket: 3 inches thick and 3 lb/cu. ft. nominal density.
J. Exposed, round and flat-oval, return-air duct insulation is one of the following:
   1. Flexible Elastomeric: 1 inchhick.
   2. Glass-Fiber Blanket: 3 inches thick and 3 lb/cu. ft. nominal density.
K. Exposed, rectangular, supply-air duct insulation is one of the following:
   1. Flexible Elastomeric: 1 inchhick.
   2. Glass-Fiber Blanket: 3 inches thick and 3 lb/cu. ft. nominal density.
L. Exposed, rectangular, return-air duct insulation is one of the following:
   1. Flexible Elastomeric: 1 inchhick.
   2. Glass-Fiber Blanket: 3 inches thick and 3 lb/cu. ft. nominal density.
M. Exposed, supply-air plenum insulation is one of the following:
   1. Flexible Elastomeric: 1 inchhick.
   2. Glass-Fiber Blanket: 3 inches thick and 3 lb/cu. ft. nominal density.
N. Exposed, return-air plenum insulation is one of the following:
   1. Flexible Elastomeric: 1 inchhick.
   2. Glass-Fiber Blanket: 3 inches thick and 3 lb/cu. ft. nominal density.

3.14 OUTDOOR, FIELD-APPLIED JACKET SCHEDULE

A. Install jacket over insulation material. For insulation with factory-applied jacket, install the field-applied jacket over the factory-applied jacket.
B. If more than one material is listed, selection from materials listed is Contractor's option.
C. Ducts and Plenums, Concealed:
   1. Aluminum, Smooth: 0.020 inch thick.
D. Ducts and Plenums, Exposed, up to 48 Inches in Diameter or with Flat Surfaces up to 72 Inches:

1. Aluminum, Smooth: 0.020 inch thick.

E. Ducts and Plenums, Exposed, Larger Than 48 Inches in Diameter or with Flat Surfaces Larger Than 72 Inches:

1. Painted Aluminum, Smooth with thick.

END OF SECTION 230713

SECTION 230716 - HVAC EQUIPMENT INSULATION

PART 1 GENERAL

1.1 SUMMARY

A. Section includes insulating HVAC equipment that is not factory insulated.
B. Related Sections:
   1. Section 230713 "Duct Insulation."
   2. Section 230719 "HVAC Piping Insulation."

1.2 ACTION SUBMITTALS

A. Product Data: For each type of product. Include thermal conductivity, water-vapor permeance thickness, and jackets (both factory and field applied, if any).
B. Sustainable Design Submittals:
C. Shop Drawings: Include plans, elevations, sections, details, and attachments to other work.
   1. Detail removable insulation at equipment connections.
   2. Detail application of field-applied jackets.
   3. Detail application at linkages of control devices.
   4. Detail field application for each equipment type.
D. Samples: For each type of insulation and jacket indicated. Identify each Sample, describing product and intended use. Sample sizes are as follows:
   1. Sheet Form Insulation Materials: 12 inches square.
   2. Sheet Jacket Materials: 12 inches square.
   3. Manufacturer's Color Charts: For products where color is specified, show the full range of colors available for each type of finish material.

1.3 INFORMATIONAL SUBMITTALS

A. Qualification Data: For qualified Installer.
B. Material Test Reports: From a qualified testing agency acceptable to authorities having jurisdiction indicating, interpreting, and certifying test results for compliance of insulation materials, sealers, attachments, cements, and jackets, with requirements indicated. Include dates of tests and test methods employed.
C. Field quality-control reports.

1.4 QUALITY ASSURANCE

A. Installer Qualifications: Skilled mechanics who have successfully completed an apprenticeship program or craft training program, certified by the Department of Labor, Bureau of Apprenticeship and Training.
B. Mockups: Before installing insulation, build mockups for each type of insulation and finish listed below to demonstrate quality of insulation application and finishes. Build mockups in the location indicated or, if not indicated, as directed by Architect. Use materials indicated for the completed Work.
   1. Equipment Mockups:
      a. One chilled-water pump and one heating-hot-water pump.
      b. One tank or vessel.
   2. For each mockup, fabricate cutaway sections to allow observation of application details for insulation materials, adhesives, mastics, attachments, and jackets.
   3. Notify Architect seven days in advance of dates and times when mockups will be constructed.
   4. Obtain Architect's approval of mockups before starting insulation application.
   5. Approval of mockups does not constitute approval of deviations from the Contract Documents contained in mockups unless Architect specifically approves such deviations in writing.
   6. Maintain mockups during construction in an undisturbed condition as a standard for judging the completed Work.
   7. Demolish and remove mockups when directed.

1.5 DELIVERY, STORAGE, AND HANDLING

A. Packaging: Insulation system materials are to be delivered to the Project site in unopened containers. The packaging is to include, the name of the manufacturer, fabricator, type, description, and size.

1.6 COORDINATION

A. Coordinate sizes and locations of supports, hangers, and insulation shields specified in Section 230529 "Hangers and Supports for HVAC Piping and Equipment."
B. Coordinate clearance requirements with equipment Installer for equipment insulation application.
C. Coordinate installation and testing of heat tracing.

1.7 SCHEDULING

A. Schedule insulation application after pressure testing systems and, where required, after installing and testing heat tracing. Insulation application may begin on segments that have satisfactory test results.

PART 2 PRODUCTS

2.1 INSULATION MATERIALS

A. Comply with requirements in "Breeching Insulation Schedule," "Indoor Equipment Insulation Schedule," and "Outdoor, Aboveground Equipment Insulation Schedule" articles for where insulating materials are applied.
B. Products do not contain asbestos, lead, mercury, or mercury compounds.
C. Products that come in contact with stainless steel have a leachable chloride content of less than 50 ppm when tested in accordance with ASTM C871.
D. Insulation materials for use on austenitic stainless steel are qualified as acceptable in accordance with ASTM C795.
E. Foam insulation materials do not use CFC or HCFC blowing agents in the manufacturing process.
F. Calcium Silicate: Flat-, curved-, and grooved-block sections of noncombustible, inorganic, hydrous calcium silicate with a non-asbestos fibrous reinforcement. Comply with ASTM C533, Type I or Type II.
    1. Prefabricated Fitting Covers: Comply with ASTM C450 and ASTM C585 for dimensions used in preforming insulation to cover valves, elbows, tees, and flanges.
G. Cellular Glass: Inorganic, incombustible, foamed or cellulated glass with annealed, rigid, hermetically sealed cells. Comply with ASTM C552.
    1. Block Insulation: Type I.
    2. Special-Shaped Insulation: Type III.
    3. Board Insulation: Type IV.
    4. Fabricated shapes in accordance with ASTM C450 and ASTM C585.
    5. Factory-applied jacket requirements are specified in "Factory-Applied Jackets" Article.
H. Flexible Elastomeric: Closed-cell or expanded-rubber materials; suitable for maximum use temperature between minus 70 deg F and 220 deg F. Comply with ASTM C534/C534M, Type II for sheet materials.
I. Glass-Fiber Blanket: Glass fibers bonded with a thermosetting resin; suitable for maximum use temperature up to 450 deg F in accordance with ASTM C411. Comply with ASTM C553, Type II, and ASTM C1290, Type II, with factory-applied vinyl jacket. Factory-applied jacket requirements are specified in "Factory-Applied Jackets" Article.
J. High-Temperature, Glass-Fiber Blanket: Glass fibers bonded with a thermosetting resin, unfaced; suitable for maximum use temperature up to 1000 deg F. Comply with ASTM C553, Type V.
K. Mineral Wool Blanket: Basalt volcanic rock-derived fibers bonded with a thermosetting resin, unfaced; suitable for maximum use temperature up to 1200 deg F in accordance with ASTM C447. Comply with ASTM C553.
L. Glass-Fiber Board: Glass fibers bonded with a thermosetting resin; suitable for maximum use temperature between 35 deg F and 250 deg F for jacketed and between 35 deg F and 450 deg F for unfaced in accordance with ASTM C411. Comply with ASTM C612, Type IA or Type IB. Provide insulation with factory-applied FSK jacket. Factory-applied jacket requirements are specified in "Factory-Applied Jackets" Article.

M. High-Temperature, Glass-Fiber Board: Glass fibers bonded with a thermosetting resin; suitable for maximum use temperature up to 1000 deg F in accordance with ASTM C411. Comply with ASTM C612, Type III, unfaced.

N. Mineral Wool Board: Basalt volcanic rock-derived fibers bonded with a thermosetting resin; suitable for maximum use temperature up to 1100 deg F in accordance with ASTM C411. Comply with ASTM C612, Type III, unfaced.

O. Glass-Fiber, Pipe and Tank: Glass fibers bonded with a thermosetting resin; suitable for maximum use temperature between 35 deg F and 850 deg F, in accordance with ASTM C411. Comply with ASTM C1393.

1. Semirigid board material with factory-applied FSK jacket.
2. Factory-applied jacket requirements are specified in "Factory-Applied Jackets" Article.

P. Mineral Wool, Pipe and Tank: Mineral wool fibers bonded with a thermosetting resin; suitable for maximum use temperature up to 1000 deg F, in accordance with ASTM C411. Comply with ASTM C1393.

1. Semirigid board material with factory-applied FSK jacket.
2. Factory-applied jacket requirements are specified in "Factory-Applied Jackets" Article.

Q. Polyisocyanurate: Prefabricated, rigid cellular polyisocyanurate material intended for use as thermal insulation. Comply with ASTM C591.

1. Type I or Type IV, except thermal conductivity (k-value) does not exceed 0.19 Btu x in./h x sq. ft. x deg F at 75 deg F after 180 days of aging.
2. Flame-spread index is 25 or less and smoke-developed index is 50 or less for thicknesses of up to 1.5 inches as tested in accordance with ASTM E84.
3. Fabricated shapes in accordance with ASTM C450 and ASTM C585.
4. Factory-Applied Jacket: Requirements are specified in "Factory-Applied Jackets" Article.
   a. Equipment Applications: field-applied PVDC jacket.

R. Polyolefin: Polyethylene thermal plastic insulation. Comply with ASTM C1427, Type II, Grade 1 for sheet materials.

S. Polystyrene: Rigid, extruded cellular polystyrene intended for use as thermal insulation. Comply with ASTM C578, Type IV or VIII.

1. Fabricate shapes in accordance with ASTM C450 and ASTM C585.

2.2 INSULATING CEMENTS

A. Glass-Fiber and Mineral Wool Insulating Cement: Comply with ASTM C195.

B. Expanded or Exfoliated Vermiculite Insulating Cement: Comply with ASTM C196.

C. Glass-Fiber and Mineral Wool, Hydraulic-Setting Insulating and Finishing Cement: Comply with ASTM C449.

2.3 ADHESIVES

A. Materials are compatible with insulation materials, jackets, and substrates and for bonding insulation to itself and to surfaces to be insulated unless otherwise indicated.

B. Calcium Silicate Adhesive: Fibrous, sodium-silicate-based adhesive with a service temperature range of 50 to 800 deg F.

C. Cellular-Glass Adhesive: Two-component, thermosetting urethane adhesive containing no flammable solvents, with a service temperature range of minus 100 to plus 200 deg F.

D. Polyisocyanurate Adhesive: Solvent-based resin adhesive, with a service temperature range of minus 75 to plus 300 deg F.

E. Flexible Elastomeric and Polyolefin Adhesive: Solvent-based adhesive.

1. Flame-spread index is 25 or less and smoke-developed index is 50 or less as tested in accordance with ASTM E84.
2. Wet Flash Point: Below 0 deg F
3. Service Temperature Range: 40 to 200 deg F.
4. Color: Black.

F. Glass-Fiber and Mineral Wool Adhesive: Comply with MIL-A-3316C, Class 2, Grade A.

G. Polystyrene Adhesive: Solvent- or water-based, synthetic resin adhesive with a service temperature range of minus 20 to plus 140 deg F.

H. ASJ Adhesive and FSK and PVDC Jacket Adhesive: Comply with MIL-A-3316C, Class 2, Grade A for bonding insulation jacket lap seams and joints.

I. PVC Jacket Adhesive: Compatible with PVC jacket.

2.4 MASTICS AND COATINGS

A. Materials are compatible with insulation materials, jackets, and substrates.

B. Vapor-Retarder Mastic, Water Based: Suitable for indoor and outdoor use on below-ambient services.
   1. Water-Vapor Permeance: Comply with ASTM E96/E96M or ASTM F1249.
   2. Service Temperature Range: 0 to plus 180 deg F.
   3. Comply with MIL-PRF-19565C, Type II, for permeance requirements
   4. Color: White.

C. Vapor-Retarder Mastic, Solvent Based, Indoor Use: Suitable for indoor use on below-ambient services.
   1. Water-Vapor Permeance: Comply with ASTM E96/E96M or ASTM F1249.
   2. Service Temperature Range: 0 to 180 deg F.
   3. Color: White.

D. Vapor-Retarder Mastic, Solvent Based, Outdoor Use: Suitable for outdoor use on below-ambient services.
   1. Water-Vapor Permeance: Comply with ASTM E96/E96M or ASTM F1249.
   2. Service Temperature Range: Minus 50 to plus 220 deg F.
   3. Color: White.

E. Breather Mastic: Water based; suitable for indoor and outdoor use on above-ambient services.
   1. Water-Vapor Permeance: ASTM E96/E96M, greater than 1.0 perm at manufacturer's recommended dry film thickness.
   2. Service Temperature Range: 0 to plus 180 deg F.
   3. Color: white.

2.5 LAGGING ADHESIVES

A. Adhesives comply with MIL-A-3316C, Class I, Grade A and are compatible with insulation materials, jackets, and substrates.
   1. Fire-resistant, water-based lagging adhesive and coating for use indoors to adhere fire-resistant lagging cloths over equipment insulation.
   2. Service Temperature Range: 20 to plus 180 deg F.
   3. Color: White.

2.6 SEALANTS

A. Materials are as recommended by the insulation manufacturer and are compatible with insulation materials, jackets, and substrates.

B. Joint Sealants:
   1. Permanently flexible, elastomeric sealant.
   2. Service Temperature Range: Minus 58 to plus 176 deg F.
   3. Color: White or gray.

C. FSK and Metal Jacket Flashing Sealants:
   1. Fire- and water-resistant, flexible, elastomeric sealant.
   2. Service Temperature Range: Minus 40 to plus 250 deg F.
   3. Color: Aluminum.

D. ASJ Flashing Sealants and Vinyl, PVDC, and PVC Jacket Flashing Sealants:
   1. Fire- and water-resistant, flexible, elastomeric sealant.
   2. Service Temperature Range: Minus 40 to plus 250 deg F.
   3. Color: White.

2.7 FACTORY-APPLIED JACKETS

A. Insulation system schedules indicate factory-applied jackets on various applications. When factory-applied jackets are indicated, comply with the following:

1. ASJ: White, kraft-paper, fiberglass-reinforced scrim with aluminum-foil backing; complying with ASTM C1136, Type I.
2. ASJ-SSL: ASJ with self-sealing, pressure-sensitive, acrylic-based adhesive covered by a removable protective strip; complying with ASTM C1136, Type I.
3. FSK Jacket: Aluminum-foil, fiberglass-reinforced scrim with kraft-paper backing; complying with ASTM C1136, Type II.
4. Vinyl Jacket: White vinyl with a permeance of 1.3 perms when tested in accordance with ASTM E96/E96M, Procedure A, and complying with NFPA 90A and NFPA 90B.

2.8 FIELD-APPLIED JACKETS

A. Field-applied jackets comply with ASTM C1136, Type I, unless otherwise indicated.
B. FSK Jacket: Aluminum-foil-face, fiberglass-reinforced scrim with kraft-paper backing.
C. PVC Jacket: High-impact-resistant, UV-resistant PVC complying with ASTM D1784, Class 16354-C; thickness as scheduled; roll stock ready for shop or field cutting and forming. Thickness is indicated in field-applied jacket schedules.
   1. Adhesive: As recommended by jacket material manufacturer.
   2. Color: White.
   3. Factory-fabricated tank heads and tank side panels.
D. Metal Jacket:
   1. Aluminum Jacket: Comply with ASTM B209, Alloy 3003, 3005, 3105, or 5005, Temper H-14.
      a. Sheet and roll stock ready for shop or field sizing.
      b. Finish and thickness are indicated in field-applied jacket schedules.
      c. Moisture Barrier for Indoor Applications: 1-mil-thick, heat-bonded polyethylene and kraft paper.
      d. Moisture Barrier for Outdoor Applications: 3-mil-thick, heat-bonded polyethylene and kraft paper.
      e. Factory-Fabricated Fitting Covers:
         1) Same material, finish, and thickness as jacket.
         2) Preformed two-piece or gore, 45- and 90-degree, short- and long-radius elbows.
         3) Tee covers.
         4) Flange and union covers.
         5) End caps.
         6) Beveled collars.
         7) Valve covers.
         8) Field fabricate fitting covers only if factory-fabricated fitting covers are not available.
   2. Stainless Steel Jacket: ASTM A240/A240M.
      a. Sheet and roll stock ready for shop or field sizing.
      b. Material, finish, and thickness are indicated in field-applied jacket schedules.
      c. Moisture Barrier for Indoor Applications: 3-mil-thick, heat-bonded polyethylene and kraft paper.
      d. Moisture Barrier for Outdoor Applications: 3-mil-thick, heat-bonded polyethylene and kraft paper.
      e. Factory-Fabricated Fitting Covers:
         1) Same material, finish, and thickness as jacket.
         2) Preformed two-piece or gore, 45- and 90-degree, short- and long-radius elbows.
         3) Tee covers.
         4) Flange and union covers.
         5) End caps.
         6) Beveled collars.
         7) Valve covers.
         8) Field fabricate fitting covers only if factory-fabricated fitting covers are not available.
E. Self-Adhesive Outdoor Jacket (Asphaltic): 60-mil-thick, laminated vapor barrier and waterproofing membrane for installation over insulation located aboveground outdoors; consisting of a rubberized bituminous resin on a cross-laminated polyethylene film covered with white aluminum-foil facing.

F. Self-Adhesive Indoor/Outdoor Jacket (Non-Asphaltic): Vapor barrier and waterproofing jacket for installation over insulation located aboveground outdoors or indoors. Specialized jacket has five layers of laminated aluminum and polyester film with low-temperature acrylic pressure-sensitive adhesive. Outer aluminum surface is coated with UV-resistant coating for protection from environmental contaminants.
   1. Permeance: 0.00 perm as tested in accordance with ASTM F1249.
   2. Flamespread/Smoke Developed: 25/50 as tested in accordance with ASTM E84.
   3. Aluminum Finish: Smooth.

G. PVDC Jacket for Indoor Applications: 4-mil-thick, white PVDC biaxially oriented barrier film with a permeance at 0.02 perm when tested in accordance with ASTM E96/E96M and with a flame-spread index of 10 and a smoke-developed index of 20 when tested in accordance with ASTM E84.

H. PVDC Jacket for Outdoor Applications: 6-mil-thick, white PVDC biaxially oriented barrier film with a permeance at 0.01 perm when tested in accordance with ASTM E96/E96M and with a flame-spread index of 25 and a smoke-developed index of 50 when tested in accordance with ASTM E84.

I. PVDC-SSL Jacket: PVDC jacket with a self-sealing, pressure-sensitive, acrylic-based adhesive covered by a removable protective strip.

2.9 FIELD-APPLIED FABRIC-REINFORCING MESH

A. Woven Glass-Fiber Mesh: Approximately 4 oz./sq. yd. with a thread count of 5 strands by 5 strands/sq. in. for covering equipment.

B. Woven Polyester Mesh: Approximately 1 oz./sq. yd. with a thread count of 10 strands by 10 strands/sq. in., in a Leno weave, for equipment.

2.10 FIELD-APPLIED CLOTHS

A. Woven Glass-Fiber Cloth: Comply with MIL-C-20079H, Type I, plain weave, and presized a minimum of 8 oz./sq. yd..

2.11 TAPES

A. ASJ Tape: White vapor-retarder tape matching factory-applied jacket with acrylic adhesive, complying with ASTM C1136.
   1. Width: 3 inches.
   2. Thickness: 11.5 mils
   3. Adhesion: 90 ounces force/inchin width.
   4. Elongation: 2 percent.
   5. Tensile Strength: 40 lbf/inch in width.
   6. ASJ Tape Disks and Squares: Precut disks or squares of ASJ tape.

B. PVC Tape: White vapor-retarder tape matching field-applied PVC jacket with acrylic adhesive; suitable for indoor and outdoor applications.
   1. Width: 2 inches.
   2. Thickness: 6 mils.
   3. Adhesion: 64 ounces force/inch in width.
   4. Elongation: 500 percent.
   5. Tensile Strength: 18 lbf/inch in width.

C. Aluminum-Foil Tape: Vapor-retarder tape with acrylic adhesive.
   1. Width: 2 inches.
   2. Thickness: 3.7 mils.
   3. Adhesion: 100 ounces force/inch in width.
   4. Elongation: 5 percent.
   5. Tensile Strength: 34 lbf/inch in width.

D. PVDC Tape for Indoor Applications: White vapor-retarder PVDC tape with acrylic adhesive.
   1. Width: 3 inches.
   2. Film Thickness: 6 mils.
   3. Adhesive Thickness: 1.5 mils.
   4. Elongation at Break: 145 percent.

5. Tensile Strength: 55 psi in width.

E. PVDC Tape for Outdoor Applications: White vapor-retarder PVDC tape with acrylic adhesive.
1. Width: 3 inches.
2. Film Thickness: 6 mils.
3. Adhesive Thickness: 1.5 mils.
4. Elongation at Break: 145 percent.
5. Tensile Strength: 55 psi in width.

2.12 SECUREMENTS

A. Bands:
1. Stainless Steel: ASTM A240/A240M, Type 304; 0.015 inch thick, 1/2 inchwide with wing seal.
2. Aluminum: ASTM B209, Alloy 3003, 3005, 3105, or 5005; Temper H-14, 0.020 inch thick, 1/2 inch wide with wing seal.
3. Springs: Twin spring set constructed of stainless steel with ends flat and slotted to accept metal bands. Spring size is determined by manufacturer for application.

B. Insulation Pins and Hangers:
1. Capacitor-Discharge-Weld Pins: Copper- or zinc-coated steel pin, fully annealed for capacitor-discharge welding; 0.106-inch-diameter shank, length to suit depth of insulation indicated.
2. Cupped-Head, Capacitor-Discharge-Weld Pins: Copper- or zinc-coated steel pin, fully annealed for capacitor-discharge welding; 0.106-inch-diameter shank, length to suit depth of insulation indicated with integral 1-1/2-inch galvanized carbon-steel washer.
3. Metal, Adhesively Attached, Perforated-Base Insulation Hangers: Baseplate welded to projecting spindle that is capable of holding insulation, of thickness indicated, securely in position indicated when self-locking washer is in place.
   a. Baseplate: Perforated, galvanized carbon-steel sheet, 0.030 inch thick by 2 inches square.
   b. Spindle: Copper- or zinc-coated, low-carbon steel, fully annealed, 0.106-inch-diameter shank; length to suit depth of insulation indicated.
   c. Adhesive: Recommended by hanger manufacturer. Use product with demonstrated capability to bond insulation hanger securely to substrates indicated without damaging insulation, hangers, and substrates.
4. Self-Sticking-Base Insulation Hangers: Baseplate welded to projecting spindle that is capable of holding insulation, of thickness indicated, securely in position indicated when self-locking washer is in place.
   a. Baseplate: Galvanized carbon-steel sheet, 0.030 inch thick by 2 inches square.
   b. Spindle: Copper- or zinc-coated, low-carbon steel, fully annealed; 0.106-inch-diameter shank; length to suit depth of insulation indicated.
   c. Adhesive-backed base with a peel-off protective cover.
5. Insulation-Retaining Washers: Self-locking washers formed from 0.016-inch-thick, galvanized-steel sheet, with beveled edge sized as required to hold insulation securely in place but not less than 1-1/2 inches in diameter.
   a. Protect ends with capped self-locking washers incorporating a spring steel insert to ensure permanent retention of cap in exposed locations.
6. Nonmetal Insulation-Retaining Washers: Self-locking washers formed from 0.016-inch-thick nylon sheet, with beveled edge sized as required to hold insulation securely in place but not less than 1-1/2 inches in diameter.

C. Staples: Outward-clinching insulation staples, nominal 3/4-inch-wide, stainless steel or Monel.

D. Wire: 0.080-inch nickel-copper alloy.

2.13 CORNER ANGLES

A. PVC Corner Angles: 30-mils-thick, minimum 1- by 1-inch PVC in accordance with ASTM D1784, Class 16354-C, white or color-coded to match adjacent surface.

B. Aluminum Corner Angles: 0.040-inch-thick, minimum 1- by 1-inch aluminum in accordance with ASTM B209, Alloy 3003, 3005, 3105, or 5005; Temper H-14.

C. Stainless Steel Corner Angles: 0.024-inch-thick, minimum 1- by 1-inch stainless steel in accordance with ASTM A240/A240M, Type 304.

PART 3 EXECUTION

3.1 EXAMINATION

A. Examine substrates and conditions for compliance with requirements for installation tolerances and other conditions affecting performance of insulation application.
   1. Verify that systems and equipment to be insulated have been tested and are free of defects.
   2. Verify that surfaces to be insulated are clean and dry.
B. Proceed with installation only after unsatisfactory conditions have been corrected.

3.2 PREPARATION

A. Clean and dry surfaces to receive insulation. Remove materials that will adversely affect insulation application.
B. Coordinate insulation installation with the tradesman installing heat tracing. Comply with requirements for heat tracing that apply to insulation.
C. Mix insulating cements with clean potable water; if insulating cements are to be in contact with stainless steel surfaces, use demineralized water.

3.3 GENERAL INSTALLATION REQUIREMENTS

A. Install insulation materials, accessories, and finishes with smooth, straight, and even surfaces; free of voids throughout the length of equipment.
B. Install insulation materials, forms, vapor barriers or retarders, and jackets, of thicknesses required for each item of equipment, as specified in insulation system schedules.
C. Install accessories compatible with insulation materials and suitable for the service. Install accessories that do not corrode, compress, or otherwise damage insulation or jacket.
D. Install insulation with longitudinal seams at top and bottom of horizontal runs.
E. Install multiple layers of insulation with longitudinal and end seams staggered.
F. Keep insulation materials dry during storage, application, and finishing. Replace insulation materials that get wet during storage or in the installation process before being properly covered and sealed in accordance with the Contract Documents.
G. Install insulation with tight longitudinal seams and end joints. Bond seams and joints with adhesive recommended by insulation material manufacturer.
H. Install insulation with least number of joints practical.
I. Where vapor barrier is indicated, seal joints, seams, and penetrations in insulation at hangers, supports, anchors, and other projections with vapor-barrier mastic.
   1. Install insulation continuously through hangers and around anchor attachments.
   2. For insulation application where vapor barriers are indicated, extend insulation on anchor legs from point of attachment to supported item to point of attachment to structure. Taper and seal ends attached to structure with vapor-barrier mastic.
   3. Install insert materials and install insulation to tightly join the insert. Seal insulation to insulation inserts with adhesive or sealing compound recommended by insulation material manufacturer.
   4. Cover inserts with jacket material matching adjacent insulation. Install shields over jacket, arranged to protect jacket from tear or puncture by hanger, support, and shield.
J. Apply adhesives, mastics, and sealants at manufacturer's recommended coverage rate and wet and dry film thicknesses.
K. Install insulation with factory-applied jackets as follows:
   1. Draw jacket tight and smooth, but not to the extent of creating wrinkles or areas of compression in the insulation.
   2. Cover circumferential joints with 3-inch-wide strips, of same material as insulation jacket. Secure strips with adhesive and outward-clinching staples along both edges of strip, spaced 4 inches o.c.
   3. Overlap jacket longitudinal seams at least 1-1/2 inches. Clean and dry surface to receive self-sealing lap. Staple laps with outward-clinching staples along edge at o.c.
   4. For below-ambient services, apply vapor-barrier mastic over staples.
   5. Cover joints and seams with tape, in accordance with insulation material manufacturer's written instructions, to maintain vapor seal.

6. Where vapor barriers are indicated, apply vapor-barrier mastic on seams and joints.

L. Cut insulation in a manner to avoid compressing insulation.

M. Finish installation with systems at operating conditions. Repair joint separations and cracking due to thermal movement.

N. Repair damaged insulation facings by applying same facing material over damaged areas. Extend patches at least 4 inches beyond damaged areas. Adhere, staple, and seal patches in similar fashion to butt joints.

O. For above-ambient services, do not install insulation to the following:

1. Vibration-control devices.
2. Testing agency labels and stamps.
3. Nameplates and data plates.
4. Manholes.
5. Handholes.
6. Cleanouts.

3.4 INSTALLATION OF EQUIPMENT, TANK, AND VESSEL INSULATION

A. , Pipe and Tank Insulation Installation for Tanks and Vessels: Secure insulation with adhesive, anchor pins, and speed washers.

1. Apply adhesives in accordance with manufacturer's recommended coverage rates per unit area, for 100 percent coverage of tank and vessel surfaces.
2. Groove and score insulation materials to fit as closely as possible to equipment, including contours. Bevel insulation edges for cylindrical surfaces for tight joints. Stagger end joints.
3. Protect exposed corners with secured corner angles.
4. Install adhesively attached or self-sticking insulation hangers and speed washers on sides of tanks and vessels as follows:
   a. Do not weld anchor pins to ASME-labeled pressure vessels.
   b. Select insulation hangers and adhesive that are compatible with service temperature and with substrate.
   c. On tanks and vessels, maximum anchor-pin spacing is 3 inches from insulation end joints and 16 inches o.c. in both directions.
   d. Do not compress insulation during installation.
   e. Cut and miter insulation segments to fit curved sides and domed heads of tanks and vessels.
   f. Impale insulation over anchor pins, and attach speed washers.
   g. Cut excess portion of pins extending beyond speed washers or bend parallel with insulation surface. Cover exposed pins and washers with tape matching insulation facing.
5. Secure each layer of insulation with stainless steel or aluminum bands. Select band material compatible with insulation materials.
6. Where insulation hangers on equipment and vessels are not permitted or practical and where insulation support rings are not provided, install a girdle network for securing insulation. Stretch prestressed aircraft cable around the diameter of vessel and make taut with clamps, turnbuckles, or breather springs. Place one circumferential girdle around equipment approximately 6 inches from each end. Install wire or cable between two circumferential girdles 12 inches o.c. Install a wire ring around each end and around outer periphery of center openings, and stretch prestressed aircraft cable radially from the wire ring to nearest circumferential girdle. Install additional circumferential girdles along the body of equipment or tank at a minimum spacing of 48 inches o.c. Use this network for securing insulation with tie wire or bands.
7. Stagger joints between insulation layers at least 3 inches.
8. Install insulation in removable and replaceable segments on equipment access doors, manholes, handholes, and other elements that require frequent removal for service and inspection.
9. Bevel and seal insulation ends around manholes, handholes, ASME stamps, and nameplates.
10. For equipment with surface temperatures below ambient, apply mastic to open ends, joints, seams, breaks, and punctures in insulation.

B. Flexible Elastomeric Thermal Insulation Installation for Tanks and Vessels: Install insulation over entire surface of tanks and vessels.

1. Apply 100 percent coverage of adhesive to surface with manufacturer's recommended adhesive.

2. Seal longitudinal seams and end joints.

C. Insulation Installation on Pumps:

1. Fabricate metal boxes lined with insulation. Fit boxes around pumps and coincide box joints with splits in pump casings. Fabricate joints with outward bolted flanges. Bolt flanges on 6-inch centers, starting at corners. Install 3/8-inch-diameter fasteners with wing nuts. Alternatively, secure the box sections together using a field-adjustable latching mechanism.
2. Fabricate boxes from galvanized steel, at least 0.040 inchck.
3. For below-ambient services, install a vapor barrier at seams, joints, and penetrations. Seal between flanges with replaceable gasket material to form a vapor barrier.

3.5 INSTALLATION OF CALCIUM SILICATE INSULATION

A. Insulation Installation on Boiler Breechings:

1. Secure single-layer insulation with stainless steel bands at 12-inch intervals, and tighten bands without deforming insulation material.
2. Install two-layer insulation with joints tightly butted and staggered at least 3 inches. Secure inner layer with wire spaced at 12-inch intervals. Secure outer layer with stainless steel bands at 12-inch intervals.
3. On exposed applications without metal jacket, finish insulation surface with a skim coat of mineral-fiber, hydraulic-setting cement. When cement is dry, apply flood coat of lagging adhesive and press on one layer of glass cloth. Overlap edges at least 1 inch. Apply finish coat of lagging adhesive over glass cloth. Thin finish coat to achieve smooth, uniform finish.

3.6 INSTALLATION OF FLEXIBLE ELASTOMERIC INSULATION

A. Install in accordance with manufacturer's written installation instructions and ASTM C1710.

B. Seal longitudinal seams and end joints with manufacturer's recommended adhesive to eliminate openings in insulation that allow passage of air to surface being insulated.

3.7 FIELD-APPLIED JACKET INSTALLATION

A. Where glass-cloth jackets are indicated, install directly over bare insulation or insulation with factory-applied jackets.

1. Draw jacket smooth and tight to surface with 2-inch overlap at seams and joints.
2. Embed glass cloth between two 0.062-inch-thick coats of lagging adhesive.
3. Completely encapsulate insulation with coating, leaving no exposed insulation.

B. Where FSK jackets are indicated, install as follows:

1. Draw jacket material smooth and tight.
2. Install lap or joint strips with same material as jacket.
3. Secure jacket to insulation with manufacturer's recommended adhesive.
4. Install jacket with 1-1/2-inch laps at longitudinal seams and 3-inch-wide joint strips at end joints.
5. Seal openings, punctures, and breaks in vapor-retarder jackets and exposed insulation with vapor-barrier mastic.

C. Where PVC jackets are indicated, install with 1-inch overlap at longitudinal seams and end joints; for horizontal applications, install with longitudinal seams along top and bottom of tanks and vessels. Seal with manufacturer's recommended adhesive.

1. Apply two continuous beads of adhesive to seams and joints, one bead under lap and the finish bead along seam and joint edge.

D. Where metal jackets are indicated, install with 2-inch overlap at longitudinal seams and end joints. Overlap longitudinal seams arranged to shed water. Seal end joints with weatherproof sealant recommended by insulation manufacturer. Secure jacket with stainless steel bands 12 inches o.c. and at end joints.

E. Where PVDC jackets are indicated, install as follows:

1. Jacket can be wrapped in cigarette fashion along length of roll for insulation systems with an outer circumference of 33-1/2 inches or less. 33-1/2-inch-circumference limit allows for 2-inch-overlap seal. Using the length of roll allows for longer sections of jacket to be installed at one time. Use adhesive on the lap seal. Visually inspect lap seal for "fishmouthing," and use PVDC tape along lap seal to secure joint.

2. Repair holes or tears in PVDC jacket by placing PVDC tape over the hole or tear and wrapping a minimum of 1-1/4 circumferences to avoid damage to tape edges.

3.8 FINISHES

A. Equipment Insulation with ASJ, Glass-Cloth, or Other Paintable Jacket Material: Paint jacket with paint system identified below and as specified in Section 099113 "Exterior Painting" and Section 099123 "Interior Painting."
   1. Flat Acrylic Finish: Two finish coats over a primer that is compatible with jacket material and finish coat paint. Add fungicidal agent to render fabric mildew proof.
      a. Finish Coat Material: Interior, flat, latex-emulsion size.
B. Flexible Elastomeric Thermal Insulation: After adhesive has fully cured, apply two coats of insulation manufacturer's recommended protective coating.
C. Color: Final color as selected by Architect. Vary first and second coats to allow visual inspection of the completed Work.
D. Do not field paint aluminum or stainless steel jackets.

3.9 FIELD QUALITY CONTROL

A. Owner will engage a qualified testing agency to perform tests and inspections.
B. Engage a qualified testing agency to perform tests and inspections.
C. Manufacturer's Field Service: Engage a factory-authorized service representative to test and inspect components, assemblies, and equipment installations, including connections.
D. Perform tests and inspections.
E. Tests and Inspections: Inspect field-insulated equipment, randomly selected by Architect, by removing field-applied jacket and insulation in layers in reverse order of their installation. Extent of inspection is limited to one location(s) for each type of equipment defined in "Indoor Equipment Insulation Schedule" and "Outdoor, Aboveground Equipment Insulation Schedule" articles. For large equipment, remove only a portion adequate to determine compliance.
F. All insulation applications will be considered defective if they do not pass tests and inspections.
G. Prepare test and inspection reports.

3.10 EQUIPMENT INSULATION SCHEDULE, GENERAL

A. Insulation conductivity and thickness per pipe size comply with schedules in this Section or with requirements of authorities having jurisdiction, whichever is more stringent.
B. Acceptable insulation materials and thicknesses are identified for each piping system and pipe size range. If more than one material is listed for a piping system, selection from materials is Contractor's option.

3.11 BREECHING INSULATION SCHEDULE

A. Round, exposed breeching and connector insulation is one of the following:
   1. Calcium Silicate: 4 inches thick.
   2. High-Temperature Glass-Fiber Blanket: 3 inches thick and 3 lb/cu. ft. nominal density.
   3. Mineral Wool Blanket: 3 inches thick and 4 lb/cu. ft. nominal density.
B. Round, concealed breeching and connector insulation is one of the following:
   1. Calcium Silicate: 4 inches thick.
   2. High-Temperature Glass-Fiber Blanket: 3 inches thick and 3 lb/cu. ft. nominal density.
   3. Mineral Wool Blanket: 3 inches thick and 4 lb/cu. ft. nominal density.
C. Rectangular, exposed breeching and connector insulation is one of the following:
   1. Calcium Silicate: 4 inches thick.
   2. High-Temperature Glass-Fiber Blanket: 3 inches thick and 3 lb/cu. ft. nominal density.
   3. Mineral Wool Blanket: 3 inches thick and 4 lb/cu. ft. nominal density.
D. Rectangular, concealed breeching and connector insulation is one of the following:
   1. Calcium Silicate: 4 inches thick.
   2. High-Temperature Glass-Fiber Blanket: 3 inches thick and 3 lb/cu. ft. nominal density.

3.12 INDOOR EQUIPMENT INSULATION SCHEDULE

A. Insulate indoor and outdoor equipment that is not factory insulated.

B. Chillers: Insulate cold surfaces on chillers, including, but not limited to, evaporator bundles, condenser bundles, suction piping, compressor inlets, tube sheets, water boxes, and nozzles with one of the following:
   1. Cellular Glass: 2 inches thick.
   2. Flexible Elastomeric: 1 inch thick.
   3. Glass-Fiber Board: 1 inchthick and 3 lb/cu. ft. nominal density.
   4. Glass-Fiber Pipe and Tank: 1 inch thick.
   5. Mineral Wool Board: 1 inch thick and 4 lb/cu. ft. nominal density.
   6. Mineral Wool Pipe and Tank: 1.5 inches thick.
   7. Polyisocyanurate: 1 inch thick.
   8. Polyolefin: 1 inch thick.

C. Heat-exchanger (water-to-water for cooling service) insulation is one of the following:
   1. Cellular Glass: 2 inches thick.
   2. Flexible Elastomeric: 1 inch thick.
   3. Glass-Fiber Blanket: 1 inchick and 2 lb/cu. ft. nominal density.
   4. Glass-Fiber Board: 1 inch thick and 3 lb/cu. ft. nominal density.
   5. Glass-Fiber Pipe and Tank: 1 inch thick.
   6. Mineral Fiber Blanket: 1 inchthick and 6 lb/cu. ft. nominal density.
   7. Mineral Wool Board: 1 inchthick and 6 lb/cu. ft. nominal density.
   8. Mineral Wool Pipe and Tank: 1.5 inchesthick.
   9. Polyisocyanurate: 1 inch thick.
   10. Polyolefin: 1 inch thick.

D. Heat-exchanger (water-to-water for heating service) insulation is one of the following:
   1. Cellular Glass: 2 inches thick.
   2. Flexible Elastomeric: 1 inch thick.
   3. Glass-Fiber Blanket: 1 inchick and 2 lb/cu. ft. nominal density.
   4. Glass-Fiber Board: 1 inch thick and 3 lb/cu. ft. nominal density.
   5. Glass-Fiber Pipe and Tank: 1 inch thick.
   6. Mineral Fiber Blanket: 1 inchthick and 6 lb/cu. ft. nominal density.
   7. Mineral Wool Board: 1 inchthick and 6 lb/cu. ft. nominal density.
   8. Mineral Wool Pipe and Tank: 1.5 inchesthick.
   9. Polyisocyanurate: 1 inch thick.
   10. Polyolefin: 1 inch thick.

E. Steam-to-steam generator insulation is one of the following:
   1. Cellular Glass: 2 inches thick.
   2. Flexible Elastomeric: 1 inch thick.
   3. Glass-Fiber Blanket: 1 inchick and 2 lb/cu. ft. nominal density.
   4. Glass-Fiber Board: 1 inch thick and 3 lb/cu. ft. nominal density.
   5. Glass-Fiber Pipe and Tank: 1 inch thick.
   6. Mineral Fiber Blanket: 1 inchthick and 6 lb/cu. ft. nominal density.
   7. Mineral Wool Board: 1 inchthick and 6 lb/cu. ft. nominal density.
   8. Mineral Wool Pipe and Tank: 1.5 inchesthick.
   9. Polyisocyanurate: 1 inch thick.
   10. Polyolefin: 1 inch thick.

F. Steam-to-hot-water converter insulation is one of the following:
   1. Cellular Glass: 2 inches thick.
   2. Flexible Elastomeric: 1 inch thick.
   3. Glass-Fiber Blanket: 1 inchick and 2 lb/cu. ft. nominal density.
   4. Glass-Fiber Board: 1 inch thick and 3 lb/cu. ft. nominal density.
   5. Glass-Fiber Pipe and Tank: 1 inch thick.

6. Mineral Fiber Blanket: 1 inchthick and 6 lb/cu. ft. nominal density.
7. Mineral Wool Board: 1 inchthick and 6 lb/cu. ft. nominal density.
8. Mineral Wool Pipe and Tank: 1.5 inchesthick.
9. Polyisocyanurate: 1 inch thick.
10. Polyolefin: 1 inch thick.

G. Hot-water-to-steam converter insulation is one of the following:
1. Calcium Silicate: 3 inches thick.
2. Cellular Glass: 3 inchesthick.
3. Glass-Fiber Board: 2 inches thick and 3 lb/cu. ft. nominal density.
4. Glass-Fiber Pipe and Tank: 2 inches thick.
5. Mineral Wool Board: 2 inches thick and 6 lb/cu. ft. nominal density.
6. Mineral Wool Pipe and Tank: 2 inches thick.

H. Chilled-water pump insulation is one ofthe following:
1. Cellular Glass: 3 inches thick.
2. Glass-Fiber Board: 2 inches] thick and 3 lb/cu. ft. nominal density.
3. Mineral Wool Board: 2 inches thick and 4 lb/cu. ft. nominal density.

I. Condenser-water pump insulation is one of the following:
1. Cellular Glass: 2 inches thick.
2. Glass-Fiber Board: 1 inchthick and 3 lb/cu. ft. nominal density.
3. Mineral Wool Board:1 inch thick and 6 lb/cu. ft. nominal density.

J. Dual-service heating and cooling pump insulation is one of the following:
1. Cellular Glass: 3 inchesthick.
2. Glass-Fiber Board: 2 inches thick and 3 lb/cu. ft. nominal density.
3. Mineral Wool Board: 2 inches thick and 6 lb/cu. ft. nominal density.
4. Polyisocyanurate: 1 inch thick.

K. Heating-hot-water pump insulation is one of the following:
1. Cellular Glass: 3 inchesthick.
2. Glass-Fiber Board: 2 inches thick and 3 lb/cu. ft. nominal density.
3. Mineral Wool Board: 2 inches thick and 6 lb/cu. ft. nominal density.
4. Polyisocyanurate: 1 inch thick.

L. Heat-recovery pump insulation is one of the following:
1. Cellular Glass: 3 inchesthick.
2. Glass-Fiber Board: 2 inches thick and 3 lb/cu. ft. nominal density.
3. Mineral Wool Board: 2 inches thick and 6 lb/cu. ft. nominal density.
4. Polyisocyanurate: 1 inch thick.

M. Steam condensate pump and boiler feedwater pump insulation is one of the following:
1. Cellular Glass: 3 inchesthick.
2. Glass-Fiber Board: 2 inches thick and 3 lb/cu. ft. nominal density.
3. Mineral Wool Board: 2 inches thick and 6 lb/cu. ft. nominal density.
4. Polyisocyanurate: 1 inch thick.
5. .

N. Chilled-water expansion/compression tank insulation is one of the following:
1. Cellular Glass: 3 inchesthick.
2. Glass-Fiber Board: 2 inches thick and 3 lb/cu. ft. nominal density.
3. Mineral Wool Board: 2 inches thick and 6 lb/cu. ft. nominal density.

O. Condenser-water expansion/compression tank insulation is one of the following:
1. Cellular Glass: 3 inchesthick.
2. Glass-Fiber Board: 2 inches thick and 3 lb/cu. ft. nominal density.
3. Mineral Wool Board: 2 inches thick and 6 lb/cu. ft. nominal density.
4. Polyisocyanurate: 1 inch thick.

P. Dual-service heating and cooling expansion/compression tank insulation is one of the following:
1. Cellular Glass: 3 inchesthick.

2. Glass-Fiber Board: 2 inches thick and 3 lb/cu. ft. nominal density.
3. Mineral Wool Board: 2 inches thick and 6 lb/cu. ft. nominal density.
4. Polyisocyanurate: 1 inch thick.

Q. Heating-hot-water expansion/compression tank insulation is one of the following:
1. Cellular Glass: 3 inchesthick.
2. Glass-Fiber Board: 2 inches thick and 3 lb/cu. ft. nominal density.
3. Mineral Wool Board: 2 inches thick and 6 lb/cu. ft. nominal density.
4. Polyisocyanurate: 1 inch thick.
5. Mineral Wool Pipe and Tank: ???Insert dimension??? thick.

R. Heat-recovery expansion/compression tank insulation is one of the following:
1. Cellular Glass: 3 inchesthick.
2. Glass-Fiber Board: 2 inches thick and 3 lb/cu. ft. nominal density.
3. Mineral Wool Board: 2 inches thick and 6 lb/cu. ft. nominal density.
4. Polyisocyanurate: 1 inch thick.

S. Chilled-water air-separator insulation is one of the following:
1. Cellular Glass: 3 inchesthick.
2. Glass-Fiber Board: 2 inches thick and 3 lb/cu. ft. nominal density.
3. Mineral Wool Board: 2 inches thick and 6 lb/cu. ft. nominal density.
4. Polyisocyanurate: 1 inch thick.

T. Condenser-water air-separator insulation is one of the following:
1. Cellular Glass: 3 inchesthick.
2. Glass-Fiber Board: 2 inches thick and 3 lb/cu. ft. nominal density.
3. Mineral Wool Board: 2 inches thick and 6 lb/cu. ft. nominal density.
4. Polyisocyanurate: 1 inch thick.

U. Dual-service heating and cooling air-separator insulation is one of the following:
1. Cellular Glass: 3 inchesthick.
2. Glass-Fiber Board: 2 inches thick and 3 lb/cu. ft. nominal density.
3. Mineral Wool Board: 2 inches thick and 6 lb/cu. ft. nominal density.
4. Polyisocyanurate: 1 inch thick.

V. Heating-hot-water air-separator insulation is one of the following:
1. Cellular Glass: 3 inchesthick.
2. Glass-Fiber Board: 2 inches thick and 3 lb/cu. ft. nominal density.
3. Mineral Wool Board: 2 inches thick and 6 lb/cu. ft. nominal density.
4. Polyisocyanurate: 1 inch thick.

W. Heat-recovery air-separator insulation is one of the following:
1. Cellular Glass: 3 inchesthick.
2. Glass-Fiber Board: 2 inches thick and 3 lb/cu. ft. nominal density.
3. Mineral Wool Board: 2 inches thick and 6 lb/cu. ft. nominal density.
4. Polyisocyanurate: 1 inch thick.

X. Thermal storage tank (brine, water, ice) insulation is one of the following:
1. Cellular Glass: 3 inchesthick.
2. Glass-Fiber Board: 2 inches thick and 3 lb/cu. ft. nominal density.
3. Mineral Wool Board: 2 inches thick and 6 lb/cu. ft. nominal density.
4. Polyisocyanurate: 1 inch thick.

Y. Deaerator insulation is one of the following:
1. Cellular Glass: 3 inchesthick.
2. Glass-Fiber Board: 2 inches thick and 3 lb/cu. ft. nominal density.
3. Mineral Wool Board: 2 inches thick and 6 lb/cu. ft. nominal density.
4. Polyisocyanurate: 1 inch thick.

Z. Steam condensate tank and receiver insulation is one of the following:
1. Cellular Glass: 3 inchesthick.
2. Glass-Fiber Board: 2 inches thick and 3 lb/cu. ft. nominal density.

3. Mineral Wool Board: 2 inches thick and 6 lb/cu. ft. nominal density.
4. Polyisocyanurate: 1 inch thick.

AA. Steam flash-tank, flash-separator, moisture-separator, and blow-off-tank insulation is one of the following:
1. Calcium Silicate: 3 inches thick.
2. Cellular Glass: 3 inches thick.
3. Glass-Fiber Board: 2 inches thick and 6 lb/cu. ft. nominal density.
4. Glass-Fiber Pipe and Tank: 2 inches thick.
5. Mineral Wool Board: 2 inches thick and 6 lb/cu. ft. nominal density.
6. Mineral Wool Pipe and Tank: 2 inches thick.

BB. Piping system filter-housing insulation is one of the following:
1. Cellular Glass: 3 inches thick.
2. Glass-Fiber Board: 2 inches thick and 3 lb/cu. ft. nominal density.
3. Glass-Fiber Pipe and Tank: 2 inches thick.
4. Mineral Wool Board: 2 inchesthick and 6 lb/cu. ft. nominal density.
5. Mineral Wool Pipe and Tank: 2 inches thick.

END OF SECTION 230716

SECTION 230719 - HVAC PIPING INSULATION

PART 1 GENERAL

1.1 SUMMARY

A. Section includes insulating the following HVAC piping systems:
   1. Condensate drain piping, indoors.
   2. Domestic hot-water piping, indoors.
   3. Refrigerant suction and hot-gas piping, indoors and outdoors.
   4. Heat-recovery piping, indoors and outdoors.
B. Related Sections:
   1. Section 230713 "Duct Insulation."
   2. Section 230716 "HVAC Equipment Insulation."

1.2 ACTION SUBMITTALS

A. Product Data: For each type of product indicated. Include thermal conductivity, water-vapor permeance thickness, and jackets (both factory and field applied if any).
B. LEED Submittals:
   1. Product Data for Credit IEQ 4.1: For adhesives and sealants, documentation including printed statement of VOC content.
   2. Laboratory Test Reports for Credit IEQ 4: For adhesives and sealants, documentation indicating that products comply with the testing and product requirements of the California Department of Health Services' "Standard Practice for the Testing of Volatile Organic Emissions from Various Sources Using Small-Scale Environmental Chambers."

1.3 INFORMATIONAL SUBMITTALS

A. Qualification Data: For qualified Installer.
B. Material Test Reports: From a qualified testing agency acceptable to authorities having jurisdiction indicating, interpreting, and certifying test results for compliance of insulation materials, sealers, attachments, cements, and jackets, with requirements indicated. Include dates of tests and test methods employed.
C. Field quality-control reports.

1.4 QUALITY ASSURANCE

A. Installer Qualifications: Skilled mechanics who have successfully completed an apprenticeship program or another craft training program certified by the Department of Labor, Bureau of Apprenticeship and Training.
B. Surface-Burning Characteristics: For insulation and related materials, as determined by testing identical products according to ASTM E 84, by a testing and inspecting agency acceptable to authorities having jurisdiction. Factory label insulation and jacket materials and adhesive, mastic, tapes, and cement material containers, with appropriate markings of applicable testing agency.
   1. Insulation Installed Indoors: Flame-spread index of 25 or less, and smoke-developed index of 50 or less.
   2. Insulation Installed Outdoors: Flame-spread index of 75 or less, and smoke-developed index of 150 or less.

1.5 DELIVERY, STORAGE, AND HANDLING

A. Packaging: Insulation material containers shall be marked by manufacturer with appropriate ASTM standard designation, type and grade, and maximum use temperature.

1.6 COORDINATION

A. Coordinate sizes and locations of supports, hangers, and insulation shields specified in Section 230529 "Hangers and Supports for HVAC Piping and Equipment."
B. Coordinate clearance requirements with piping Installer for piping insulation application. Before preparing piping Shop Drawings, establish and maintain clearance requirements for installation of insulation and field-applied jackets and finishes and for space required for maintenance.
C. Coordinate installation and testing of heat tracing.

1.7 SCHEDULING

A. Schedule insulation application after pressure testing systems and, where required, after installing and testing heat tracing. Insulation application may begin on segments that have satisfactory test results.
B. Complete installation and concealment of plastic materials as rapidly as possible in each area of construction.

PART 2 PRODUCTS

2.1 INSULATION MATERIALS

A. Comply with requirements in "Piping Insulation Schedule, General," "Indoor Piping Insulation Schedule," "Outdoor, Aboveground Piping Insulation Schedule," and "Outdoor, Underground Piping Insulation Schedule" articles for where insulating materials shall be applied.
B. Products shall not contain asbestos, lead, mercury, or mercury compounds.
C. Products that come in contact with stainless steel shall have a leachable chloride content of less than 50 ppm when tested according to ASTM C 871.
D. Insulation materials for use on austenitic stainless steel shall be qualified as acceptable according to ASTM C 795.
E. Flexible Elastomeric Insulation: Closed-cell, sponge- or expanded-rubber materials. Comply with ASTM C 534, Type I for tubular materials.

2.2 ADHESIVES

A. Materials shall be compatible with insulation materials, jackets, and substrates and for bonding insulation to itself and to surfaces to be insulated unless otherwise indicated.
B. Flexible Elastomeric and Polyolefin Adhesive: Comply with MIL-A-24179A, Type II, Class I.
   1. For indoor applications, adhesive shall have a VOC content of 50 g/L or less when calculated according to 40 CFR 59, Subpart D (EPA Method 24).
   2. Adhesive shall comply with the testing and product requirements of the California Department of Health Services' "Standard Practice for the Testing of Volatile Organic Emissions from Various Sources Using Small-Scale Environmental Chambers."

2.3 SEALANTS

A. Metal Jacket Flashing Sealants:
   1. Materials shall be compatible with insulation materials, jackets, and substrates.
   2. Fire- and water-resistant, flexible, elastomeric sealant.
   3. Service Temperature Range: Minus 40 to plus 250 deg F.
   4. Color: Aluminum.
   5. For indoor applications, sealants shall have a VOC content of 420 g/L or less when calculated according to 40 CFR 59, Subpart D (EPA Method 24).
   6. Sealants shall comply with the testing and product requirements of the California Department of Health Services' "Standard Practice for the Testing of Volatile Organic Emissions from Various Sources Using Small-Scale Environmental Chambers."

2.4 FIELD-APPLIED JACKETS

A. Field-applied jackets shall comply with ASTM C 921, Type I, unless otherwise indicated.
B. Metal Jacket:
   1. Aluminum Jacket: Comply with ASTM B 209, Alloy 3003, 3005, 3105, or 5005, Temper H-14.
      a. Factory cut and rolled to size.
      b. Finish and thickness are indicated in field-applied jacket schedules.
      c. Moisture Barrier for Outdoor Applications: 3-mil-thick, heat-bonded polyethylene and kraft paper.
      d. Factory-Fabricated Fitting Covers:
         1) Same material, finish, and thickness as jacket.
         2) Preformed 2-piece or gore, 45- and 90-degree, short- and long-radius elbows.
         3) Tee covers.
         4) Flange and union covers.
         5) End caps.
         6) Beveled collars.
         7) Valve covers.
         8) Field fabricate fitting covers only if factory-fabricated fitting covers are not available.

2.5 SECUREMENTS

A. Bands:
   1. Stainless Steel: ASTM A 167 or ASTM A 240/A 240M, Type 304; 0.015 inch thick, 1/2 inch wide with closed seal.
   2. Springs: Twin spring set constructed of stainless steel with ends flat and slotted to accept metal bands. Spring size determined by manufacturer for application.

PART 3 EXECUTION

3.1 EXAMINATION

A. Examine substrates and conditions for compliance with requirements for installation tolerances and other conditions affecting performance of insulation application.
   1. Verify that systems to be insulated have been tested and are free of defects.
   2. Verify that surfaces to be insulated are clean and dry.
   3. Proceed with installation only after unsatisfactory conditions have been corrected.

3.2 PREPARATION

A. Surface Preparation: Clean and dry surfaces to receive insulation. Remove materials that will adversely affect insulation application.
B. Surface Preparation: Clean and prepare surfaces to be insulated. Before insulating, apply a corrosion coating to insulated surfaces as follows:
   1. Stainless Steel: Coat 300 series stainless steel with an epoxy primer 5 mils thick and an epoxy finish 5 mils thick if operating in a temperature range between 140 and 300 deg F. Consult coating manufacturer for appropriate coating materials and application methods for operating temperature range.
   2. Carbon Steel: Coat carbon steel operating at a service temperature between 32 and 300 deg F with an epoxy coating. Consult coating manufacturer for appropriate coating materials and application methods for operating temperature range.
C. Coordinate insulation installation with the trade installing heat tracing. Comply with requirements for heat tracing that apply to insulation.
D. Mix insulating cements with clean potable water; if insulating cements are to be in contact with stainless-steel surfaces, use demineralized water.

3.3 GENERAL INSTALLATION REQUIREMENTS

A. Install insulation materials, accessories, and finishes with smooth, straight, and even surfaces; free of voids throughout the length of piping including fittings, valves, and specialties.

B. Install insulation materials, forms, vapor barriers or retarders, jackets, and thicknesses required for each item of pipe system as specified in insulation system schedules.

C. Install accessories compatible with insulation materials and suitable for the service. Install accessories that do not corrode, soften, or otherwise attack insulation or jacket in either wet or dry state.

D. Install insulation with longitudinal seams at top and bottom of horizontal runs.

E. Install multiple layers of insulation with longitudinal and end seams staggered.

F. Do not weld brackets, clips, or other attachment devices to piping, fittings, and specialties.

G. Keep insulation materials dry during application and finishing.

H. Install insulation with tight longitudinal seams and end joints. Bond seams and joints with adhesive recommended by insulation material manufacturer.

I. Install insulation with least number of joints practical.

J. Where vapor barrier is indicated, seal joints, seams, and penetrations in insulation at hangers, supports, anchors, and other projections with vapor-barrier mastic.

   1. Install insulation continuously through hangers and around anchor attachments.
   2. For insulation application where vapor barriers are indicated, extend insulation on anchor legs from point of attachment to supported item to point of attachment to structure. Taper and seal ends at attachment to structure with vapor-barrier mastic.
   3. Install insert materials and install insulation to tightly join the insert. Seal insulation to insulation inserts with adhesive or sealing compound recommended by insulation material manufacturer.
   4. Cover inserts with jacket material matching adjacent pipe insulation. Install shields over jacket, arranged to protect jacket from tear or puncture by hanger, support, and shield.

K. Apply adhesives, mastics, and sealants at manufacturer's recommended coverage rate and wet and dry film thicknesses.

L. Install insulation with factory-applied jackets as follows:

   1. Draw jacket tight and smooth.
   2. Cover circumferential joints with 3-inch-wide strips, of same material as insulation jacket. Secure strips with adhesive and outward clinching staples along both edges of strip, spaced 4 inches o.c.
   3. Overlap jacket longitudinal seams at least 1-1/2 inches. Install insulation with longitudinal seams at bottom of pipe. Clean and dry surface to receive self-sealing lap.
   4. Cover joints and seams with tape, according to insulation material manufacturer's written instructions, to maintain vapor seal.
   5. Where vapor barriers are indicated, apply vapor-barrier mastic on seams and joints and at ends adjacent to pipe flanges and fittings.

M. Cut insulation in a manner to avoid compressing insulation more than 75 percent of its nominal thickness.

N. Finish installation with systems at operating conditions. Repair joint separations and cracking due to thermal movement.

O. Repair damaged insulation facings by applying same facing material over damaged areas. Extend patches at least 4 inches beyond damaged areas. Adhere, staple, and seal patches similar to butt joints.

P. For above-ambient services, do not install insulation to the following:

   1. Vibration-control devices.
   2. Testing agency labels and stamps.
   3. Nameplates and data plates.
   4. Manholes.
   5. Handholes.
   6. Cleanouts.

3.4 PENETRATIONS

A. Insulation Installation at Roof Penetrations: Install insulation continuously through roof penetrations.

   1. Seal penetrations with flashing sealant.

2. For applications requiring only indoor insulation, terminate insulation above roof surface and seal with joint sealant. For applications requiring indoor and outdoor insulation, install insulation for outdoor applications tightly joined to indoor insulation ends. Seal joint with joint sealant.
3. Extend jacket of outdoor insulation outside roof flashing at least 2 inches below top of roof flashing.
4. Seal jacket to roof flashing with flashing sealant.

B. Insulation Installation at Underground Exterior Wall Penetrations: Terminate insulation flush with sleeve seal. Seal terminations with flashing sealant.

C. Insulation Installation at Aboveground Exterior Wall Penetrations: Install insulation continuously through wall penetrations.
1. Seal penetrations with flashing sealant.
2. For applications requiring only indoor insulation, terminate insulation inside wall surface and seal with joint sealant. For applications requiring indoor and outdoor insulation, install insulation for outdoor applications tightly joined to indoor insulation ends. Seal joint with joint sealant.
3. Extend jacket of outdoor insulation outside wall flashing and overlap wall flashing at least 2 inches.
4. Seal jacket to wall flashing with flashing sealant.

D. Insulation Installation at Interior Wall and Partition Penetrations (That Are Not Fire Rated): Install insulation continuously through walls and partitions.

E. Insulation Installation at Fire-Rated Wall and Partition Penetrations: Install insulation continuously through penetrations of fire-rated walls and partitions.
1. Comply with requirements in Section 078413 "Penetration Firestopping" for firestopping and fire-resistive joint sealers.

F. Insulation Installation at Floor Penetrations:
1. Pipe: Install insulation continuously through floor penetrations.
2. Seal penetrations through fire-rated assemblies. Comply with requirements in Section 078413 "Penetration Firestopping."

3.5 GENERAL PIPE INSULATION INSTALLATION

A. Requirements in this article generally apply to all insulation materials except where more specific requirements are specified in various pipe insulation material installation articles.

B. Insulation Installation on Fittings, Valves, Strainers, Flanges, and Unions:
1. Install insulation over fittings, valves, strainers, flanges, unions, and other specialties with continuous thermal and vapor-retarder integrity unless otherwise indicated.
2. Insulate pipe elbows using preformed fitting insulation or mitered fittings made from same material and density as adjacent pipe insulation. Each piece shall be butted tightly against adjoining piece and bonded with adhesive. Fill joints, seams, voids, and irregular surfaces with insulating cement finished to a smooth, hard, and uniform contour that is uniform with adjoining pipe insulation.
3. Insulate tee fittings with preformed fitting insulation or sectional pipe insulation of same material and thickness as used for adjacent pipe. Cut sectional pipe insulation to fit. Butt each section closely to the next and hold in place with tie wire. Bond pieces with adhesive.
4. Insulate valves using preformed fitting insulation or sectional pipe insulation of same material, density, and thickness as used for adjacent pipe. Overlap adjoining pipe insulation by not less than two times the thickness of pipe insulation, or one pipe diameter, whichever is thicker. For valves, insulate up to and including the bonnets, valve stuffing-box studs, bolts, and nuts. Fill joints, seams, and irregular surfaces with insulating cement.
5. Insulate strainers using preformed fitting insulation or sectional pipe insulation of same material, density, and thickness as used for adjacent pipe. Overlap adjoining pipe insulation by not less than two times the thickness of pipe insulation, or one pipe diameter, whichever is thicker. Fill joints, seams, and irregular surfaces with insulating cement. Insulate strainers so strainer basket flange or plug can be easily removed and replaced without damaging the insulation and jacket. Provide a removable reusable insulation cover. For below-ambient services, provide a design that maintains vapor barrier.
6. Insulate flanges and unions using a section of oversized preformed pipe insulation. Overlap adjoining pipe insulation by not less than two times the thickness of pipe insulation, or one pipe diameter, whichever is thicker.
7. Cover segmented insulated surfaces with a layer of finishing cement and coat with a mastic. Install vapor-barrier mastic for below-ambient services and a breather mastic for above-ambient services.

Reinforce the mastic with fabric-reinforcing mesh. Trowel the mastic to a smooth and well-shaped contour.

8. For services not specified to receive a field-applied jacket except for flexible elastomeric and polyolefin, install fitted PVC cover over elbows, tees, strainers, valves, flanges, and unions. Terminate ends with PVC end caps. Tape PVC covers to adjoining insulation facing using PVC tape.
9. Stencil or label the outside insulation jacket of each union with the word "union." Match size and color of pipe labels.

C. Insulate instrument connections for thermometers, pressure gages, pressure temperature taps, test connections, flow meters, sensors, switches, and transmitters on insulated pipes. Shape insulation at these connections by tapering it to and around the connection with insulating cement and finish with finishing cement, mastic, and flashing sealant.

D. Install removable insulation covers at locations indicated. Installation shall conform to the following:

1. Make removable flange and union insulation from sectional pipe insulation of same thickness as that on adjoining pipe. Install same insulation jacket as adjoining pipe insulation.
2. When flange and union covers are made from sectional pipe insulation, extend insulation from flanges or union long at least two times the insulation thickness over adjacent pipe insulation on each side of flange or union. Secure flange cover in place with stainless-steel or aluminum bands. Select band material compatible with insulation and jacket.
3. Construct removable valve insulation covers in same manner as for flanges, except divide the two-part section on the vertical center line of valve body.
4. When covers are made from block insulation, make two halves, each consisting of mitered blocks wired to stainless-steel fabric. Secure this wire frame, with its attached insulation, to flanges with tie wire. Extend insulation at least 2 inches over adjacent pipe insulation on each side of valve. Fill space between flange or union cover and pipe insulation with insulating cement. Finish cover assembly with insulating cement applied in two coats. After first coat is dry, apply and trowel second coat to a smooth finish.
5. Unless a PVC jacket is indicated in field-applied jacket schedules, finish exposed surfaces with a metal jacket.

3.6 INSTALLATION OF FLEXIBLE ELASTOMERIC INSULATION

A. Seal longitudinal seams and end joints with manufacturer's recommended adhesive to eliminate openings in insulation that allow passage of air to surface being insulated.

B. Insulation Installation on Pipe Flanges:

1. Install pipe insulation to outer diameter of pipe flange.
2. Make width of insulation section same as overall width of flange and bolts, plus twice the thickness of pipe insulation.
3. Fill voids between inner circumference of flange insulation and outer circumference of adjacent straight pipe segments with cut sections of sheet insulation of same thickness as pipe insulation.
4. Secure insulation to flanges and seal seams with manufacturer's recommended adhesive to eliminate openings in insulation that allow passage of air to surface being insulated.

C. Insulation Installation on Pipe Fittings and Elbows:

1. Install mitered sections of pipe insulation.
2. Secure insulation materials and seal seams with manufacturer's recommended adhesive to eliminate openings in insulation that allow passage of air to surface being insulated.

D. Insulation Installation on Valves and Pipe Specialties:

1. Install preformed valve covers manufactured of same material as pipe insulation when available.
2. When preformed valve covers are not available, install cut sections of pipe and sheet insulation to valve body. Arrange insulation to permit access to packing and to allow valve operation without disturbing insulation.
3. Install insulation to flanges as specified for flange insulation application.
4. Secure insulation to valves and specialties and seal seams with manufacturer's recommended adhesive to eliminate openings in insulation that allow passage of air to surface being insulated.

3.7 FIELD-APPLIED JACKET INSTALLATION

A. Where metal jackets are indicated, install with 2-inch overlap at longitudinal seams and end joints. Overlap longitudinal seams arranged to shed water. Seal end joints with weatherproof sealant recommended by insulation manufacturer. Secure jacket with stainless-steel bands 12 inches o.c. and at end joints.

3.8 FINISHES

A. Pipe Insulation with ASJ, Glass-Cloth, or Other Paintable Jacket Material: Paint jacket with paint system identified below and as specified in Section 099113 "Exterior Painting" and Section 099123 "Interior Painting."
   1. Flat Acrylic Finish: Two finish coats over a primer that is compatible with jacket material and finish coat paint. Add fungicidal agent to render fabric mildew proof.
      a. Finish Coat Material: Interior, flat, latex-emulsion size.
B. Flexible Elastomeric Thermal Insulation: After adhesive has fully cured, apply two coats of insulation manufacturer's recommended protective coating.
C. Color: Final color as selected by Architect. Vary first and second coats to allow visual inspection of the completed Work.
D. Do not field paint aluminum or stainless-steel jackets.

3.9 FIELD QUALITY CONTROL

A. Testing Agency: Engage a qualified testing agency to perform tests and inspections.
B. Perform tests and inspections.
C. Tests and Inspections:
   1. Inspect pipe, fittings, strainers, and valves, randomly selected by Architect, by removing field-applied jacket and insulation in layers in reverse order of their installation. Extent of inspection shall be limited to three locations of straight pipe, three locations of threaded fittings, three locations of welded fittings, two locations of threaded strainers, two locations of welded strainers, three locations of threaded valves, and three locations of flanged valves for each pipe service defined in the "Piping Insulation Schedule, General" Article.
D. All insulation applications will be considered defective Work if sample inspection reveals noncompliance with requirements.

3.10 PIPING INSULATION SCHEDULE, GENERAL

A. Acceptable preformed pipe and tubular insulation materials and thicknesses are identified for each piping system and pipe size range. If more than one material is listed for a piping system, selection from materials listed is Contractor's option.

3.11 INDOOR PIPING INSULATION SCHEDULE

A. Condensate and Equipment Drain Water below 60 Deg F:
   1. All Pipe Sizes: Insulation shall be the following:
      a. Flexible Elastomeric: 3/4 inch thick.
B. Domestic-Hot-Water Supply and Return, 200 Deg F and Below:
   1. NPS 12 and Smaller: Insulation shall be the following:
      a. Mineral-Fiber, Preformed Pipe, Type I: 2 inches thick.
C. Refrigerant Suction and Hot-Gas Piping:
   1. All Pipe Sizes: Insulation shall be the following:
      a. Flexible Elastomeric: Thickness shall comply with the latest California Energy Code.
D. Refrigerant Suction and Hot-Gas Flexible Tubing:
   1. All Pipe Sizes: Insulation shall be the following:
      a. Flexible Elastomeric: Thickness shall comply with the latest California Energy Code.
E. Heat-Recovery Piping:
   1. All Pipe Sizes: Insulation shall be the following:
      a. Flexible Elastomeric: Thickness shall comply with the latest California Energy Code.

3.12 OUTDOOR, ABOVEGROUND PIPING INSULATION SCHEDULE

A. Refrigerant Suction and Hot-Gas Piping:
   1. All Pipe Sizes: Insulation shall be the following:
      a. Flexible Elastomeric: Thickness shall comply with the latest California Energy Code.
B. Refrigerant Suction and Hot-Gas Flexible Tubing:
   1. All Pipe Sizes: Insulation shall be the following:
      a. Flexible Elastomeric: Thickness shall comply with the latest California Energy Code.
C. Heat-Recovery Piping:
   1. All Pipe Sizes: Insulation shall be the following:
      a. Flexible Elastomeric: Thickness shall comply with the latest California Energy Code.

3.13 OUTDOOR, FIELD-APPLIED JACKET SCHEDULE

A. Install jacket over insulation material. For insulation with factory-applied jacket, install the field-applied jacket over the factory-applied jacket.
B. If more than one material is listed, selection from materials listed is Contractor's option.
C. Piping, Exposed:
   1. Aluminum, Stucco Embossed: 0.016 inch thick.

END OF SECTION

SECTION 230923 - DIRECT DIGITAL CONTROL (DDC) SYSTEM FOR HVAC

PART 1 GENERAL

1.1 SUMMARY

A. Section Includes:
   1. DDC system for monitoring and controlling of HVAC systems.
   2. Delivery of selected control devices to equipment and systems manufacturers for factory installation and to HVAC systems installers for field installation.

1.2 DEFINITIONS

A. Algorithm: A logical procedure for solving a recurrent mathematical problem. A prescribed set of well-defined rules or processes for solving a problem in a finite number of steps.
B. Analog: A continuously varying signal value, such as current, flow, pressure, or temperature.
C. BACnet Specific Definitions:
   1. BACnet: Building Automation Control Network Protocol, ASHRAE 135. A communications protocol allowing devices to communicate data over and services over a network.
   2. BACnet Interoperability Building Blocks (BIBBs): BIBB defines a small portion of BACnet functionality that is needed to perform a particular task. BIBBs are combined to build the BACnet functional requirements for a device.
   3. BACnet/IP: Defines and allows using a reserved UDP socket to transmit BACnet messages over IP networks. A BACnet/IP network is a collection of one or more IP subnetworks that share the same BACnet network number.
   4. BACnet Testing Laboratories (BTL): Organization responsible for testing products for compliance with ASHRAE 135, operated under direction of BACnet International.
   5. PICS (Protocol Implementation Conformance Statement): Written document that identifies the particular options specified by BACnet that are implemented in a device.
D. Binary: Two-state signal where a high signal level represents ON" or "OPEN" condition and a low signal level represents "OFF" or "CLOSED" condition. "Digital" is sometimes used interchangeably with "Binary" to indicate a two-state signal.
E. Controller: Generic term for any standalone, microprocessor-based, digital controller residing on a network, used for local or global control. Three types of controllers are indicated: Network Controller, Programmable Application Controller, and Application-Specific Controller.
F. Control System Integrator: An entity that assists in expansion of existing enterprise system and support of additional operator interfaces to I/O being added to existing enterprise system.
G. COV: Changes of value.
H. DDC System Provider: Authorized representative of, and trained by, DDC system manufacturer and responsible for execution of DDC system Work indicated.
I. Distributed Control: Processing of system data is decentralized and control decisions are made at subsystem level. System operational programs and information are provided to remote subsystems and status is reported back. On loss of communication, subsystems shall be capable of operating in a standalone mode using the last best available data.
J. DOCSIS: Data-Over Cable Service Interface Specifications.
K. Gateway: Bidirectional protocol translator that connects control systems that use different communication protocols.
L. HLC: Heavy load conditions.
M. I/O: System through which information is received and transmitted. I/O refers to analog input (AI), binary input (BI), analog output (AO) and binary output (BO). Analog signals are continuous and represent control influences such as flow, level, moisture, pressure, and temperature. Binary signals convert electronic signals to digital pulses (values) and generally represent two-position operating and alarm status. "Digital," (DI and (DO), is sometimes used interchangeably with "Binary," (BI) and (BO), respectively.
N. LAN: Local area network.
O. Low Voltage: As defined in NFPA 70 for circuits and equipment operating at less than 50 V or for remote-control, signaling power-limited circuits.

P. Mobile Device: A data-enabled phone or tablet computer capable of connecting to a cellular data network and running a native control application or accessing a web interface.
Q. Modbus TCP/IP: An open protocol for exchange of process data.
R. MS/TP: Master-slave/token-passing, IEE 8802-3. Datalink protocol LAN option that uses twisted-pair wire for low-speed communication.
S. Network Controller: Digital controller, which supports a family of programmable application controllers and application-specific controllers, that communicates on peer-to-peer network for transmission of global data.
T. Network Repeater: Device that receives data packet from one network and rebroadcasts it to another network. No routing information is added to protocol.
U. Peer to Peer: Networking architecture that treats all network stations as equal partners.
V. POT: Portable operator's terminal.
W. RAM: Random access memory.
X. RF: Radio frequency.
Y. Router: Device connecting two or more networks at network layer.
Z. TCP/IP: Transport control protocol/Internet protocol..
AA. UPS: Uninterruptible power supply.
BB. USB: Universal Serial Bus.
CC. User Datagram Protocol (UDP): This protocol assumes that the IP is used as the underlying protocol.
DD. WLED: White light emitting diode.

1.3 PREINSTALLATION MEETINGS

A. Preinstallation Conference: Conduct conference at Project site.

1.4 ACTION SUBMITTALS

A. Product Data: For each type of product include the following:
1. Construction details, material descriptions, dimensions of individual components and profiles, and finishes.
2. Operating characteristics, electrical characteristics, and furnished accessories indicating process operating range, accuracy over range, control signal over range, default control signal with loss of power, calibration data specific to each unique application, electrical power requirements, and limitations of ambient operating environment, including temperature and humidity.
3. Product description with complete technical data, performance curves, and product specification sheets.
4. Installation, operation and maintenance instructions including factors effecting performance.
5. Bill of materials of indicating quantity, manufacturer, and extended model number for each unique product.
a. Workstations.
b. Servers.
c. Gateways.
d. Routers.
e. Protocol analyzers.
f. DDC controllers.
g. Enclosures.
h. Electrical power devices.
i. UPS units.
j. Accessories.
k. Instruments.
l. Control dampers and actuators.
m. Control valves and actuators.
6. When manufacturer's product datasheets apply to a product series rather than a specific product model, clearly indicate and highlight only applicable information.
7. Each submitted piece of product literature shall clearly cross reference specification and drawings that submittal is to cover.

B. Software Submittal:
   1. Cross-referenced listing of software to be loaded on each operator workstation, server, gateway, and DDC controller.
   2. Description and technical data of all software provided, and cross-referenced to products in which software will be installed.
   3. Operating system software, operator interface and programming software, color graphic software, DDC controller software, maintenance management software, and third-party software.
   4. Include a flow diagram and an outline of each subroutine that indicates each program variable name and units of measure.
   5. Listing and description of each engineering equation used with reference source.
   6. Listing and description of each constant used in engineering equations and a reference source to prove origin of each constant.
   7. Description of operator interface to alphanumeric and graphic programming.
   8. Description of each network communication protocol.
   9. Description of system database, including all data included in database, database capacity and limitations to expand database.
   10. Description of each application program and device drivers to be generated, including specific information on data acquisition and control strategies showing their relationship to system timing, speed, processing burden and system throughout.
   11. Controlled Systems: Instrumentation list with element name, type of device, manufacturer, model number, and product data. Include written description of sequence of operation including schematic diagram.
C. Shop Drawings:
   1. Include plans, elevations, sections, and mounting details where applicable.
   2. Include details of product assemblies. Indicate dimensions, weights, loads, required clearances, method of field assembly, components, and location and size of each field connection.
   3. Plan Drawings indicating the following:
      a. Screened backgrounds of walls, structural grid lines, HVAC equipment, ductwork and piping.
      b. Room names and numbers with coordinated placement to avoid interference with control products indicated.
      c. Each desktop workstation, server, gateway, router, DDC controller, control panel instrument connecting to DDC controller, and damper and valve connecting to DDC controller, if included in Project.
      d. Exact placement of products in rooms, ducts, and piping to reflect proposed installed condition.
      e. Network communication cable and raceway routing.
      f. Information, drawn to scale, same scale as mechanical plans.
      g. Proposed routing of wiring, cabling, conduit, and tubing, coordinated with building services for review before installation.
   4. Schematic drawings for each controlled HVAC system indicating the following:
      a. I/O points labeled with point names shown. Indicate instrument range, normal operating set points, and alarm set points. Indicate fail position of each damper and valve, if included in Project.
      b. I/O listed in table format showing point name, type of device, manufacturer, model number, and cross-reference to product data sheet number.
      c. A graphic showing location of control I/O in proper relationship to HVAC system.
      d. Wiring diagram with each I/O point having a unique identification and indicating labels for all wiring terminals.
      e. Unique identification of each I/O that shall be consistently used between different drawings showing same point.
      f. Elementary wiring diagrams of controls for HVAC equipment motor circuits including interlocks, switches, relays and interface to DDC controllers.
      g. Narrative sequence of operation.
      h. Graphic sequence of operation, showing all inputs and output logical blocks.
   5. Control panel drawings indicating the following:

a. Panel dimensions, materials, size, and location of field cable, raceways, and tubing connections.
b. Interior subpanel layout, drawn to scale and showing all internal components, cabling and wiring raceways, nameplates and allocated spare space.
c. Front, rear, and side elevations and nameplate legend.
d. Unique drawing for each panel.

6. DDC system network riser diagram indicating the following:
   a. Each device connected to network with unique identification for each.
   b. Interconnection of each different network in DDC system.
   c. For each network, indicate communication protocol, speed and physical means of interconnecting network devices, such as copper cable type, or optical fiber cable type. Indicate raceway type and size for each.
   d. Each network port for connection of an operator workstation or other type of operator interface with unique identification for each.
7. DDC system electrical power riser diagram indicating the following:
   a. Each point of connection to field power with requirements (volts/phase//hertz/amperes/connection type) listed for each.
   b. Each control power supply including, as applicable, transformers, power-line conditioners, transient voltage suppression and high filter noise units, DC power supplies, and UPS units with unique identification for each.
   c. Each product requiring power with requirements (volts/phase//hertz/amperes/connection type) listed for each.
   d. Power wiring type and size, race type, and size for each.
8. Monitoring and control signal diagrams indicating the following:
   a. Control signal cable and wiring between controllers and I/O.
   b. Point-to-point schematic wiring diagrams for each product.
   c. Control signal tubing to sensors, switches and transmitters.
   d. Process signal tubing to sensors, switches and transmitters.
9. Color graphics indicating the following:
   a. Itemized list of color graphic displays to be provided.
   b. For each display screen to be provided, a true color copy showing layout of pictures, graphics and data displayed.
   c. Intended operator access between related hierarchical display screens.

D. System Description:
1. Full description of DDC system architecture, network configuration, operator interfaces and peripherals, servers, controller types and applications, gateways, routers and other network devices, and power supplies.
2. Complete listing and description of each report, log and trend for format and timing and events which initiate generation.
3. System and product operation under each potential failure condition including, but not limited to, the following:
   a. Loss of power.
   b. Loss of network communication signal.
   c. Loss of controller signals to inputs and outpoints.
   d. Operator workstation failure.
   e. Gateway failure.
   f. Network failure
   g. Controller failure.
   h. Instrument failure.
   i. Control damper and valve actuator failure.
4. Complete bibliography of documentation and media to be delivered to Owner.
5. Description of testing plans and procedures.
6. Description of Owner training.

E. Delegated-Design Submittal: For DDC system products and installation indicated as being delegated.

1. Supporting documentation showing DDC system design complies with performance requirements indicated, including calculations and other documentation necessary to prove compliance.
2. Schedule and design calculations for control dampers and actuators.
    a. Flow at Project design and minimum flow conditions.
    b. Face velocity at Project design and minimum airflow conditions.
    c. Pressure drop across damper at Project design and minimum airflow conditions.
    d. AMCA 500-D damper installation arrangement used to calculate and schedule pressure drop, as applicable to installation.
    e. Maximum close-off pressure.
    f. Leakage airflow at maximum system pressure differential (fan close-off pressure).
    g. Torque required at worst case condition for sizing actuator.
    h. Actuator selection indicating torque provided.
    i. Actuator signal to control damper (on, close or modulate).
    j. Actuator position on loss of power.
    k. Actuator position on loss of control signal.
3. Schedule and design calculations for control valves and actuators.
    a. Flow at Project design and minimum flow conditions.
    b. Pressure-differential drop across valve at Project design flow condition.
    c. Maximum system pressure-differential drop (pump close-off pressure) across valve at Project minimum flow condition.
    d. Design and minimum control valve coefficient with corresponding valve position.
    e. Maximum close-off pressure.
    f. Leakage flow at maximum system pressure differential.
    g. Torque required at worst case condition for sizing actuator.
    h. Actuator selection indicating torque provided.
    i. Actuator signal to control damper (on, close or modulate).
    j. Actuator position on loss of power.
    k. Actuator position on loss of control signal.
4. Schedule and design calculations for selecting flow instruments.
    a. Instrument flow range.
    b. Project design and minimum flow conditions with corresponding accuracy, control signal to transmitter and output signal for remote control.
    c. Extreme points of extended flow range with corresponding accuracy, control signal to transmitter and output signal for remote control.
    d. Pressure-differential loss across instrument at Project design flow conditions.
    e. Where flow sensors are mated with pressure transmitters, provide information for each instrument separately and as an operating pair.

1.5 INFORMATIONAL SUBMITTALS

A. Coordination Drawings: Plan drawings, reflected ceiling plan(s), and other details, drawn to scale and coordinated with each other, using input from installers of the items involved.

B. Qualification Data:
1. Systems Provider Qualification Data:
    a. Resume of project manager assigned to Project.
    b. Resumes of application engineering staff assigned to Project.
    c. Resumes of installation and programming technicians assigned to Project.
    d. Resumes of service technicians assigned to Project.
    e. Brief description of past project including physical address, floor area, number of floors, building system cooling and heating capacity and building's primary function.
    f. Description of past project DDC system, noting similarities to Project scope and complexity indicated.
    g. Names of staff assigned to past project that will also be assigned to execute work of this Project.

h. Owner contact information for past project including name, phone number, and e-mail address.

i. Contractor contact information for past project including name, phone number, and e-mail address.

j. Architect and Engineer contact information for past project including name, phone number, and e-mail address.

2. Manufacturer's qualification data.

3. Testing agency's qualifications data.

C. Product Certificates:

1. Data Communications Protocol Certificates: Certifying that each proposed DDC system component complies with ASHRAE 135.

2. Data Communications Protocol Certificates: Certifying that each proposed DDC system component complies with LonWorks.

D. Preconstruction Test Reports: For each separate test performed.

E. Source quality-control reports.

F. Field quality-control reports.

G. Manufacturer's warranty.

1.6 CLOSEOUT SUBMITTALS

A. Operation and Maintenance Data: For DDC system to include in emergency, operation and maintenance manuals.

1. In addition to items specified in Section 017823 "Operation and Maintenance Data," include the following:

a. Project Record Drawings of as-built versions of submittal Shop Drawings provided in electronic PDF format.

b. Testing and commissioning reports and checklists of completed final versions of reports, checklists, and trend logs.

c. As-built versions of submittal Product Data.

d. Names, addresses, e-mail addresses and 24-hour telephone numbers of Installer and service representatives for DDC system and products.

e. Operator's manual with procedures for operating control systems including logging on and off, handling alarms, producing point reports, trending data, overriding computer control and changing set points and variables.

f. Programming manuals with description of programming language and syntax, of statements for algorithms and calculations used, of point database creation and modification, of program creation and modification, and of editor use.

g. Engineering, installation, and maintenance manuals that explain how to:

1) Design and install new points, panels, and other hardware.

2) Perform preventive maintenance and calibration.

3) Debug hardware problems.

4) Repair or replace hardware.

h. Documentation of all programs created using custom programming language including set points, tuning parameters, and object database.

i. Backup copy of graphic files, programs, and database on electronic media such as DVDs.

j. List of recommended spare parts with part numbers and suppliers.

k. Complete original-issue documentation, installation, and maintenance information for furnished third-party hardware including computer equipment and sensors.

l. Complete original-issue copies of furnished software, including operating systems, custom programming language, operator workstation software, and graphics software.

m. Licenses, guarantees, and warranty documents.

n. Recommended preventive maintenance procedures for system components, including schedule of tasks such as inspection, cleaning, and calibration; time between tasks; and task descriptions.

o. Owner training materials.

1.7 QUALITY ASSURANCE

A. DDC System Manufacturer Qualifications:
   1. Nationally recognized manufacturer of DDC systems and products.
   2. DDC systems with similar requirements to those indicated for a continuous period of five years within time of bid.
   3. DDC systems and products that have been successfully tested and in use on at least five past projects.
   4. Having complete published catalog literature, installation, operation and maintenance manuals for all products intended for use.
   5. Having full-time in-house employees for the following:
      a. Product research and development.
      b. Product and application engineering.
      c. Product manufacturing, testing and quality control.
      d. Technical support for DDC system installation training, commissioning and troubleshooting of installations.
      e. Owner operator training.
B. DDC System Provider Qualifications:
   1. Authorized representative of, and trained by, DDC system manufacturer.
   2. In-place facility located within 100 miles of Project site.
   3. Demonstrated past experience with installation of DDC system products being installed for period within five consecutive years before time of bid.
   4. Demonstrated past experience on five projects of similar complexity, scope and value.
   5. Each person assigned to Project shall have demonstrated past experience.
   6. Staffing resources of competent and experienced full-time employees that are assigned to execute work according to schedule.
   7. Service and maintenance staff assigned to support Project during warranty period.
   8. Product parts inventory to support on-going DDC system operation for a period of not less than five years after Substantial Completion.
   9. DDC system manufacturer's backing to take over execution of Work if necessary to comply with requirements indicated. Include Project-specific written letter, signed by manufacturer's corporate officer, if requested.
C. Testing Agency Qualifications: Member company of NETA.
   1. Testing Agency's Field Supervisor: Certified by NETA to supervise on-site testing.

1.8 WARRANTY

A. Manufacturer's Warranty: Manufacturer and Installer agree to repair or replace products that fail in materials or workmanship within specified warranty period.
   1. Failures shall be adjusted, repaired, or replaced at no additional cost or reduction in service to Owner.
   2. Include updates or upgrades to software and firmware if necessary to resolve deficiencies.
      a. Install updates only after receiving Owner's written authorization.
   3. Warranty service shall occur during normal business hours and commence within 24 hours of Owner's warranty service request.
   4. Warranty Period: Two year(s) from date of Substantial Completion.
      a. For Gateway: Three-year parts and labor warranty for each.

PART 2 PRODUCTS

2.1 DDC SYSTEM MANUFACTURERS

A. Manufacturers: Subject to compliance with requirements, provide products by the following:
   1. Johnson Controls, Inc.

2.2 DDC SYSTEM DESCRIPTION

A. Microprocessor-based monitoring and control including analog/digital conversion and program logic. A control loop or subsystem in which digital and analog information is received and processed by a microprocessor, and digital control signals are generated based on control algorithms and transmitted to field devices to achieve a set of predefined conditions.
   1. DDC system shall consist of a high-speed, peer-to-peer network of distributed DDC controllers, other network devices, operator interfaces, and software.

B. Electrical Components, Devices, and Accessories: Listed and labeled as defined in NFPA 70, by a qualified testing agency, and marked for intended location and application.

2.3 WEB ACCESS

A. DDC system shall be web based.
   1. Web-Based Access to DDC System:
      a. DDC system software shall be based on server thin-client architecture, designed around open standards of web technology. DDC system server shall be accessed using a web browser over DDC system network, using Owner's LAN, and remotely over Internet through Owner's LAN.
      b. Intent of thin-client architecture is to provide operators complete access to DDC system via a web browser. No special software other than a web browser shall be required to access graphics, point displays, and trends; to configure trends, points, and controllers; and to edit programming.
      c. Web access shall be password protected.

2.4 PERFORMANCE REQUIREMENTS

A. Delegated Design: Engage a qualified professional to design DDC system to satisfy requirements indicated.
   1. System Performance Objectives:
      a. DDC system shall manage HVAC systems.
      b. DDC system control shall operate HVAC systems to achieve optimum operating costs while using least possible energy and maintaining specified performance.
      c. DDC system shall respond to power failures, HVAC equipment failures, and adverse and emergency conditions encountered through connected I/O points.
      d. DDC system shall operate while unattended by an operator and through operator interaction.
      e. DDC system shall record trends and transaction of events and produce report information such as performance, energy, occupancies, and equipment operation.

B. Surface-Burning Characteristics: Products installed in ducts, equipment, and return-air paths shall comply with ASTM E 84; testing by a qualified testing agency. Identify products with appropriate markings of applicable testing agency.
   1. Flame-Spread Index: 25 or less.
   2. Smoke-Developed Index: 50 or less.

C. DDC System Speed:
   1. Response Time of Connected I/O:
      a. AI point values connected to DDC system shall be updated at least every five seconds for use by DDC controllers. Points used globally shall also comply with this requirement.
      b. BI point values connected to DDC system shall be updated at least every five seconds for use by DDC controllers. Points used globally shall also comply with this requirement.
      c. AO points connected to DDC system shall begin to respond to controller output commands within three second(s). Global commands shall also comply with this requirement.
      d. BO point values connected to DDC system shall respond to controller output commands within three second(s). Global commands shall also comply with this requirement.
   2. Display of Connected I/O:
      a. Analog point COV connected to DDC system shall be updated and displayed at least every 10 seconds for use by operator.

b. Binary point COV connected to DDC system shall be updated and displayed at least every 10 seconds for use by operator.

c. Alarms of analog and digital points connected to DDC system shall be displayed within 15 seconds of activation or change of state.

d. Graphic display refresh shall update within five seconds.

e. Point change of values and alarms displayed from workstation to workstation when multiple operators are viewing from multiple workstations shall not exceed graphic refresh rate indicated.

D. Network Bandwidth: Design each network of DDC system to include at least 30 percent available spare bandwidth with DDC system operating under normal and heavy load conditions indicated. Calculate bandwidth usage, and apply a safety factor to ensure that requirement is satisfied when subjected to testing under worst case conditions.

E. DDC System Data Storage:

1. Include capability to archive not less than 24 consecutive months of historical data for all I/O points connected to system, including alarms, event histories, transaction logs, trends and other information indicated.

F. DDC Data Access:

1. When logged into the system, operator shall be able to also interact with any DDC controller connected to DDC system as required for functional operation of DDC system.

2. System(s) shall be used for application configuration; for archiving, reporting and trending of data; for operator transaction archiving and reporting; for network information management; for alarm annunciation; and for operator interface tasks and controls application management.

G. Future Expandability:

1. DDC system size shall be expandable for future tenant improvements and/or additional project buildings on site.

2. Additional DDC controllers, I/O and associated wiring shall be all that is needed to achieve ultimate capacity. Initial network infrastructure shall be designed and installed to support ultimate capacity.

3. Operator interfaces installed initially shall not require hardware and software additions and revisions for ultimate capacity.

H. Input Point Displayed Accuracy: Input point displayed values shall meet following end-to-end overall system accuracy, including errors associated with meter, sensor, transmitter, lead wire or cable, and analog to digital conversion.

1. Moisture (Relative Humidity):

a. Air: Within 5 percent RH.

b. Space: Within 5 percent RH.

c. Outdoor: Within 5 percent RH.

2. Temperature, Dry Bulb:

a. Air: Within 1 deg F.

b. Space: Within 1 deg F.

c. Outdoor: Within 2 deg F.

I. Precision of I/O Reported Values: Values reported in database and displayed shall have following precision:

1. Current:

a. Milliamperes: Nearest 1/100th of a milliampere.

b. Amperes: Nearest 1/10th of an ampere up to 100 A; nearest ampere for 100 A and more.

2. Moisture (Relative Humidity):

a. Relative Humidity (Percentage): Nearest 1 percent.

3. Temperature:

a. Air, Ducts and Equipment: Nearest 1/10th of a degree.

b. Outdoor: Nearest degree.

c. Space: Nearest 1/10th of a degree.

4. Voltage: Nearest 1/10 volt up to 100 V; nearest volt above 100 V.

J. Control Stability: Control variables indicated within the following limits:

1. Temperature, Dry Bulb:

a. Air: Within 2 deg F.

b. Space: Within 2 deg F.

K. Environmental Conditions for Controllers, Gateways, and Routers:

1. Products shall operate without performance degradation under ambient environmental temperature, pressure and humidity conditions encountered for installed location.

a. If product alone cannot comply with requirement, install product in a protective enclosure that is isolated and protected from conditions impacting performance. Enclosure shall be internally insulated, electrically heated, cooled and ventilated as required by product and application.

2. Products shall be protected with enclosures satisfying the following minimum requirements unless more stringent requirements are indicated. Products not available with integral enclosures complying with requirements indicated shall be housed in protective secondary enclosures. Installed location shall dictate the following NEMA 250 enclosure requirements:

a. Outdoors: NEMA 3R.

b. Indoors: NEMA 1.

c. Localized Areas Exposed to Washdown: NEMA 4X.

L. Environmental Conditions for Instruments and Actuators:

1. Instruments and actuators shall operate without performance degradation under the ambient environmental temperature, pressure, humidity, and vibration conditions specified and encountered for installed location.

a. If instruments and actuators alone cannot comply with requirement, install instruments and actuators in protective enclosures that are isolated and protected from conditions impacting performance. Enclosure shall be internally insulated, electrically heated, cooled and ventilated as required by instrument and application.

2. Instruments, actuators and accessories shall be protected with enclosures satisfying the following minimum requirements unless more stringent requirements are indicated. Instruments and actuators not available with integral enclosures complying with requirements indicated shall be housed in protective secondary enclosures. Installed location shall dictate the following NEMA 250 enclosure requirements:

a. Outdoors: NEMA 3R.

b. Indoors: NEMA 1.

c. Localized Areas Exposed to Washdown: NEMA 4X.

M. Electric Power Quality:

1. Power-Line Surges:

a. Protect DDC system products connected to ac power circuits from power-line surges to comply with requirements of IEEE C62.41.

b. Do not use fuses for surge protection.

c. Test protection in the normal mode and in the common mode, using the following two waveforms:

1) 10-by-1000-mic.sec. waveform with a peak voltage of 1500 V and a peak current of 60 A.

2) 8-by-20-mic.sec. waveform with a peak voltage of 1000 V and a peak current of 500 A.

2. Power Conditioning:

a. Protect DDC system products connected to ac power circuits from irregularities and noise rejection. Characteristics of power-line conditioner shall be as follows:

1) At 85 percent load, output voltage shall not deviate by more than plus or minus 1 percent of nominal when input voltage fluctuates between minus 20 percent to plus 10 percent of nominal.

2) During load changes from zero to full load, output voltage shall not deviate by more than plus or minus 3 percent of nominal.

3) Accomplish full correction of load switching disturbances within five cycles, and 95 percent correction within two cycles of onset of disturbance.

4) Total harmonic distortion shall not exceed 3-1/2 percent at full load.

3. Ground Fault: Protect products from ground fault by providing suitable grounding. Products shall not fail due to ground fault condition.

N. Continuity of Operation after Electric Power Interruption:

1. Equipment and associated factory-installed controls, field-installed controls, electrical equipment, and power supply connected to building normal and backup power systems shall automatically return equipment and associated controls to operating state occurring immediately before loss of normal power, without need for manual intervention by operator when power is restored either through backup power source or through normal power if restored before backup power is brought online.

2.5 SYSTEM ARCHITECTURE

A. System architecture shall consist of no more than two levels of LANs.
   1. Level one LAN shall connect network controllers and operator workstations.
   2. Level two LAN shall connect application-specific controllers to programmable application controllers and network controllers.

B. Minimum Data Transfer and Communication Speed:
   1. LAN Connecting Operator Workstations and Network Controllers: 100 Mbps.
   2. LAN Connecting Programmable Application Controllers: 1000 kbps.
   3. LAN Connecting Application-Specific Controllers: 115,000 bps.

C. System architecture shall be modular and have inherent ability to expand with no impact to performance indicated.

D. System architecture shall perform modifications without having to remove and replace existing network equipment.

E. Number of LANs and associated communication shall be transparent to operator. All I/O points residing on any LAN shall be capable of global sharing between all system LANs.

F. System design shall eliminate dependence on any single device for system alarm reporting and control execution. Each controller shall operate independently by performing its' own control, alarm management and historical data collection.

2.6 DDC SYSTEM OPERATOR INTERFACES

A. Operator Means of System Access: Operator shall be able to access entire DDC system through any of multiple means, including, but not limited to, the following:
   1. Portable workstation with hardwired connection through LAN port.
   2. Portable operator terminal with hardwired connection through LAN port.
   3. Portable operator workstation with wireless connection through LAN router.
   4. Mobile device and application with secured wireless connection through LAN router or cellular data service.
   5. Remote connection through web access.

B. Access to system, regardless of operator means used, shall be transparent to operator.

C. Network Ports: For hardwired connection of desktop or portable workstation. Network port shall be easily accessible, properly protected, clearly labeled, and installed at the following locations:
   1. Each mechanical/electrical equipment room.
   2. Security system command center.
   3. Fire-alarm system command center.

D. Portable Workstations:
   1. Connect to DDC system Level one LAN through a communications port directly on LAN or through a communications port on a DDC controller.
   2. Able to communicate with any device located on any DDC system LAN.
   3. Connect to DDC system Level two LAN through a communications port on an application-specific controller, or a room temperature sensor connected to an application-specific controller.
   4. Connect to system through a wireless router connected to Level one LAN.
   5. Connect to system through a cellular data service.
   6. Portable workstation shall be able to communicate with any device connected to any system LAN regardless of point of physical connection to system.
   7. Monitor, program, schedule, adjust set points, and report capabilities of I/O connected anywhere in system.
   8. Have dynamic graphic displays that are identical to desktop workstations.

E. Telephone Communications:
1. Through use of a standard modem, operator shall be able to communicate with any device connected to any system LAN.
2. Have auto-dial and auto-answer communications to allow desktop and portable workstations and DDC controllers to communicate with remote workstations and remote DDC controllers via telephone lines.
a. Portable Workstations:
1) Operators shall be able to perform all control functions, report functions, and database generation and modification functions as if directly connected to system LAN.
2) Have routines to automatically answer calls, and either file or display information sent remotely.
3) Communications taking place over telephone lines shall be completely transparent to operator.
4) Dial-up program shall maintain a user-definable cross-reference and associated telephone numbers so it is not required to remember or manually dial telephone numbers.
b. DDC Controllers:
1) Not have modems unless specifically indicated for a unique controller.
2) Controllers with modems shall automatically place calls to report critical alarms, or to upload trend and historical information for archiving.
3) Analyze and prioritize alarms to minimize initiation of calls.
4) Buffer noncritical alarms in memory and report them as a group of alarms, or until an operator manually requests an upload.
5) Make provisions for handling busy signals, no-answers, and incomplete data transfers.
6) Call default devices when communications cannot be established with primary devices.

F. Critical Alarm Reporting:
1. Operator-selected critical alarms shall be sent by DDC system to notify operator of critical alarms that require immediate attention.
2. DDC system shall send alarm notification to multiple recipients that are assigned for each alarm.
3. DDC system shall notify recipients by any or all means, including e-mail, text message, and prerecorded phone message to mobile and landline phone numbers.

G. Simultaneous Operator Use: Capable of accommodating up to 10 simultaneous operators that are accessing DDC system through any one of operator interfaces indicated.

2.7 NETWORKS

A. Acceptable networks for connecting workstations and network controllers shall be verified by the Contractor with the Owner for complete compatibility with the existing campus wide network.

B. Acceptable networks for connecting programmable application controllers shall be verified by the Contractor with the Owner for complete compatibility with the existing campus wide network.

C. Acceptable networks for connecting application-specific controllers shall be verified by the Contractor with the Owner for complete compatibility with the existing campus wide network.

2.8 NETWORK COMMUNICATION PROTOCOL

A. Network communication protocol(s) used throughout entire DDC system shall be open to Owner and available to other companies for use in making future modifications to DDC system.

B. ASHRAE 135 Protocol:
1. ASHRAE 135 communication protocol shall be sole and native protocol used throughout entire DDC system.
2. DDC system shall not require use of gateways except to integrate HVAC equipment and other building systems and equipment, not required to use ASHRAE 135 communication protocol.
3. If used, gateways shall connect to DDC system using ASHRAE 135 communication protocol and Project object properties and read/write services indicated by interoperability schedule.

4. Operator workstations, controllers and other network devices shall be tested and listed by BACnet Testing Laboratories.

2.9 PORTABLE WORKSTATIONS

A. Description: A self-contained computer designed to allow for normal use in different locations and conditions.
B. Performance Requirements:
1. Performance requirements may dictate equipment exceeding minimum requirements indicated.
2. Energy Star compliant.
3. Hardware and software shall support local down-loading to DDC controllers.
4. Data transfer rate to DDC controller shall be at network speed.
C. Processor:
1. Minimum Processor Speed: 3.0 GHz.
2. RAM:
a. Capacity: 4 GB.
b. Speed and Type: 1024 MHz, DDR5.
3. Hard Drive:
a. Media: Solid state.
b. Number of Hard Drives: One.
c. Capacity: 100 GB.
D. Input and Output Ports:
1. Serial port.
2. Shared port for external keyboard or mouse.
3. Four USB 3.0 ports.
4. HDMI port.
5. Ethernet port.
6. IEEE 1394 port.
E. Battery:
1. Capable of supporting operation of portable workstation for a minimum of 8 hours.
2. Battery life of at least three years.
3. Battery charge time of less than three hours.
4. Spare Battery. One.
F. Keyboard:
1. 85-key backlit keyboard.
2. Full upper- and lowercase ASCII keyset.
G. Integral Pointing Device: Touchpad with two buttons or equivalent pointing device.
H. Display:
1. 15.4” diagonal or larger high-definition WLED color display.
2. Antiglare screen.
3. 1920 by 1080 pixel resolution.
4. Brightness: 300 nits.
I. Network Interface Card: Include card with connection, as application.
1. 10-100-1000 base TX Ethernet with RJ45 connector port.
2. 100 base FX Ethernet with SC or ST port.
J. Accessories:
1. Nylon carrying case.
2. Wireless optical mouse.

2.10 SYSTEM SOFTWARE

A. System Software Minimum Requirements:
1. Contractor shall verify the need for additional software. A campus wide DDC system exists on site.

2. Real-time multitasking and multiuser 64-bit operating system that allows concurrent multiple operator workstations operating and concurrent execution of multiple real-time programs and custom program development.
3. Operating system shall be capable of operating DOS and Microsoft Windows applications.
4. Database management software shall manage all data on an integrated and non-redundant basis. Additions and deletions to database shall be without detriment to existing data. Include cross linkages so no data required by a program can be deleted by an operator until that data have been deleted from respective programs.
5. Network communications software shall manage and control multiple-network communications to provide exchange of global information and execution of global programs.
6. Operator interface software shall include day-to-day operator transaction processing, alarm and report handling, operator privilege level and data segregation control, custom programming, and online data modification capability.
7. Scheduling software shall schedule centrally based time and event, temporary, and exception day programs.

B. Operator Interface Software:
1. Minimize operator training through use of English language prorating and English language point identification.
2. Minimize use of a typewriter-style keyboard through use of a pointing device similar to a mouse.
3. Operator sign-off shall be a manual operation or, if no keyboard or mouse activity takes place, an automatic sign-off.
4. Automatic sign-off period shall be programmable from one to 60 minutes in one-minute increments on a per operator basis.
5. Operator sign-on and sign-off activity shall be recorded and sent to printer.
6. Security Access:
   a. Operator access to DDC system shall be under password control.
   b. An alphanumeric password shall be field assignable to each operator.
   c. Operators shall be able to access DDC system by entry of proper password.
   d. Operator password shall be same regardless of which computer or other interface means is used.
   e. Additions or changes made to passwords shall be updated automatically.
   f. Each operator shall be assigned an access level to restrict access to data and functions the operator is cable of performing.
   g. Software shall have at least five access levels.
   h. Each menu item shall be assigned an access level so that a one-for-one correspondence between operator assigned access level(s) and menu item access level(s) is required to gain access to menu item.
   i. Display menu items to operator with those capable of access highlighted. Menu and operator access level assignments shall be online programmable and under password control.
7. Data Segregation:
   a. Include data segregation for control of specific data routed to a workstation, to an operator or to a specific output device, such as a printer.
   b. Include at least 32 segregation groups.
   c. Segregation groups shall be selectable such as "fire points," "fire points on second floor," "space temperature points," "HVAC points," and so on.
   d. Points shall be assignable to multiple segregation groups. Display and output of data to printer or monitor shall occur where there is a match of operator or peripheral segregation group assignment and point segregations.
   e. Alarms shall be displayed and printed at each peripheral to which segregation allows, but only those operators assigned to peripheral and having proper authorization level will be allowed to acknowledge alarms.
   f. Operators and peripherals shall be assignable to multiple segregation groups and all assignments are to be online programmable and under password control.
8. Operators shall be able to perform commands including, but not limited to, the following:
   a. Start or stop selected equipment.

b. Adjust set points.
c. Add, modify, and delete time programming.
d. Enable and disable process execution.
e. Lock and unlock alarm reporting for each point.
f. Enable and disable totalization for each point.
g. Enable and disable trending for each point.
h. Override control loop set points.
i. Enter temporary override schedules.
j. Define holiday schedules.
k. Change time and date.
l. Enter and modify analog alarm limits.
m. Enter and modify analog warning limits.
n. View limits.
o. Enable and disable demand limiting.
p. Enable and disable duty cycle.
q. Display logic programming for each control sequence.

9. Reporting:
   a. Generated automatically and manually.
   b. Sent to displays, printers and disk files.
   c. Types of Reporting:
      1) General listing of points.
      2) List points currently in alarm.
      3) List of off-line points.
      4) List points currently in override status.
      5) List of disabled points.
      6) List points currently locked out.
      7) List of items defined in a "Follow-Up" file.
      8) List weekly schedules.
      9) List holiday programming.
      10) List of limits and deadbands.
10. Summaries: For specific points, for a logical point group, for an operator selected group(s), or for entire system without restriction due to hardware configuration.

C. Graphic Interface Software:
1. Include a full interactive graphical selection means of accessing and displaying system data to operator. Include at least five levels with the penetration path operator assignable (for example, site, building, floor, air-handling unit, and supply temperature loop). Native language descriptors assigned to menu items are to be operator defined and modifiable under password control.
2. Include a hierarchical-linked dynamic graphic operator interface for accessing and displaying system data and commanding and modifying equipment operation. Interface shall use a pointing device with pull-down or penetrating menus, color and animation to facilitate operator understanding of system.
3. Include at least 10 levels of graphic penetration with the hierarchy operator assignable.
4. Descriptors for graphics, points, alarms and such shall be modified through operator's workstation under password control.
5. Graphic displays shall be online user definable and modifiable using the hardware and software provided.
6. Data to be displayed within a graphic shall be assignable regardless of physical hardware address, communication or point type.
7. Graphics are to be online programmable and under password control.
8. Points may be assignable to multiple graphics where necessary to facilitate operator understanding of system operation.
9. Graphics shall also contain software points.
10. Penetration within a graphic hierarchy shall display each graphic name as graphics are selected to facilitate operator understanding.

11. Back-trace feature shall permit operator to move upward in the hierarchy using a pointing device. Back trace shall show all previous penetration levels. Include operator with option of showing each graphic full screen size with back trace as horizontal header or by showing a "stack" of graphics, each with a back trace.
12. Display operator accessed data on the monitor.
13. Operator shall select further penetration using pointing device to click on a site, building, floor, area, equipment, and so on. Defined and linked graphic below that selection shall then be displayed.
14. Include operator with means to directly access graphics without going through penetration path.
15. Dynamic data shall be assignable to graphics.
16. Display points (physical and software) with dynamic data provided by DDC system with appropriate text descriptors, status or value, and engineering unit.
17. Use color, rotation, or other highly visible means, to denote status and alarm states. Color shall be variable for each class of points, as chosen by operator.
18. Points shall be dynamic with operator adjustable update rates on a per point basis from one second to over a minute.
19. For operators with appropriate privilege, points shall be commanded directly from display using pointing device.
    a. For an analog command point such as set point, current conditions and limits shall be displayed and operator can position new set point using pointing device.
    b. For a digital command point such as valve position, valve shall show its current state such as open or closed and operator could select alternative position using pointing device.
    c. Keyboard equivalent shall be available for those operators with that preference.
20. Operator shall be able to split or resize viewing screen into quadrants to show one graphic on one quadrant of screen and other graphics or spreadsheet, bar chart, word processing, curve plot and other information on other quadrants on screen. This feature shall allow real-time monitoring of one part of system while displaying other parts of system or data to better facilitate overall system operation.
21. Help Features:
    a. On-line context-sensitive help utility to facilitate operator training and understanding.
    b. Bridge to further explanation of selected keywords. Document shall contain text and graphics to clarify system operation.
        1) If help feature does not have ability to bridge on keywords for more information, a complete set of user manuals shall be provided in an indexed word-processing program, which shall run concurrently with operating system software.
    c. Available for Every Menu Item:
        1) Index items for each system menu item.
22. Graphic generation software shall allow operator to add, modify, or delete system graphic displays.
    a. Include libraries of symbols depicting HVAC symbols such as fans, coils, filters, dampers, valves pumps, and electrical symbols.
    b. Graphic development package shall use a pointing device in conjunction with a drawing program to allow operator to perform the following:
        1) Define background screens.
        2) Define connecting lines and curves.
        3) Locate, orient and size descriptive text.
        4) Define and display colors for all elements.
        5) Establish correlation between symbols or text and associated system points or other displays.

D. Project-Specific Graphics: Graphics documentation including, but not limited to, the following:
1. Site plan showing each building, and additional site elements, which are being controlled or monitored by DDC system.
2. Plan for each building floor, including interstitial floors, and each roof level of each building, showing the following:
    a. Room layouts with room identification and name.
    b. Locations and identification of all monitored and controlled HVAC equipment and other equipment being monitored and controlled by DDC system.
    c. Location and identification of each hardware point being controlled or monitored by DDC system.

3. Control schematic for each of following, including a graphic system schematic representation with point identification, set point and dynamic value indication.
    a. Fan.
    b. Rooftop unit.
4. Graphic display for each piece of equipment connected to DDC system through a data communications link. Include dynamic indication of all points associated with equipment.
5. DDC system network riser diagram that shows schematic layout for entire system including all networks and all controllers, gateways, operator workstations and other network devices.

E. Customizing Software:
1. Software to modify and tailor DDC system to specific and unique requirements of equipment installed, to programs implemented and to staffing and operational practices planned.
2. Online modification of DDC system configuration, program parameters, and database using menu selection and keyboard entry of data into preformatted display templates.
3. As a minimum, include the following modification capability:
    a. Operator assignment shall include designation of operator passwords, access levels, point segregation and auto sign-off.
    b. Peripheral assignment capability shall include assignment of segregation groups and operators to consoles and printers, designation of backup workstations and printers, designation of workstation header points and enabling and disabling of print-out of operator changes.
    c. System configuration and diagnostic capability shall include communications and peripheral port assignments, DDC controller assignments to network, DDC controller enable and disable, assignment of command trace to points and application programs and initiation of diagnostics.
    d. System text addition and change capability shall include English or native language descriptors for points, segregation groups and access levels and action messages for alarms, run time and trouble condition.
    e. Time and schedule change capability shall include time and date set, time and occupancy schedules, exception and holiday schedules and daylight savings time schedules.
    f. Point related change capability shall include the following:
        1) System and point enable and disable.
        2) Run-time enable and disable.
        3) Assignment of points to segregation groups, calibration tables, lockout, and run time and to a fixed I/O value.
        4) Assignment of alarm and warning limits.
    g. Application program change capability shall include the following:
        1) Enable and disable of software programs.
        2) Programming changes.
        3) Assignment of comfort limits, global points, time and event initiators, time and event schedules and enable and disable time and event programs.
4. Software shall allow operator to add points, or groups of points, to DDC system and to link them to energy optimization and management programs. Additions and modifications shall be online programmable using operator workstation, downloaded to other network devices and entered into their databases. After verification of point additions and associated program operation, database shall be uploaded and recorded on hard drive and disk for archived record.
5. Include high-level language programming software capability for implementation of custom DDC programs. Software shall include a compiler, linker, and up- and down-load capability.
6. Include a library of DDC algorithms, intrinsic control operators, arithmetic, logic and relational operators for implementation of control sequences. Also include, as a minimum, the following:
    a. Proportional control (P).
    b. Proportional plus integral (PI).
    c. Proportional plus integral plus derivative (PID).
    d. Adaptive and intelligent self-learning control.
        1) Algorithm shall monitor loop response to output corrections and adjust loop response characteristics according to time constant changes imposed.

2) Algorithm shall operate in a continuous self-learning manner and shall retain in memory a stored record of system dynamics so that on system shut down and restart, learning process starts from where it left off.

7. Fully implemented intrinsic control operators including sequence, reversing, ratio, time delay, time of day, highest select AO, lowest select AO, analog controlled digital output, analog control AO, and digitally controlled AO.
8. Logic operators such as "And," "Or," "Not," and others that are part of a standard set available with a high-level language.
9. Arithmetic operators such as "Add," "Subtract," "Multiply," "Divide," and others that are part of a standard set available with a high-level language.
10. Relational operators such as "Equal To," "Not Equal To," "Less Than," "Greater Than," and others that are part of a standard set available with a high-level language.

F. Alarm Handling Software:

1. Include alarm handling software to report all alarm conditions monitored and transmitted through DDC controllers, gateways and other network devices.
2. Include first in, first out handling of alarms according to alarm priority ranking, with most critical alarms first, and with buffer storage in case of simultaneous and multiple alarms.
3. Alarm handling shall be active at all times to ensure that alarms are processed even if an operator is not currently signed on to DDC system.
4. Alarms display shall include the following:
   a. Indication of alarm condition such as "Abnormal Off," "Hi Alarm," and "Low Alarm."
   b. "Analog Value" or "Status" group and point identification with native language point descriptor such as "Space Temperature, Building 110, 2nd Floor, Room 212."
   c. Discrete per point alarm action message, such as "Call Maintenance Dept. Ext-5561."
   d. Include extended message capability to allow assignment and printing of extended action messages. Capability shall be operator programmable and assignable on a per point basis.
5. Alarms shall be directed to appropriate operator workstations, printers, and individual operators by privilege level and segregation assignments.
6. Send e-mail alarm messages to designated operators.
7. Send e-mail, page, text and voice messages to designated operators for critical alarms.
8. Alarms shall be categorized and processed by class.
   a. Class 1:
      1) Associated with fire, security and other extremely critical equipment monitoring functions; have alarm, trouble, return to normal, and acknowledge conditions printed and displayed.
      2) Unacknowledged alarms to be placed in unacknowledged alarm buffer.
      3) All conditions shall cause an audible sound and shall require individual acknowledgment to silence audible sound.
   b. Class 2:
      1) Critical, but not life-safety related, and processed same as Class 1 alarms, except do not require individual acknowledgment.
      2) Acknowledgement may be through a multiple alarm acknowledgment.
   c. Class 3:
      1) General alarms; printed, displayed and placed in unacknowledged alarm buffer queues.
      2) Each new alarm received shall cause an audible sound. Audible sound shall be silenced by "acknowledging" alarm or by pressing a "silence" key.
      3) Acknowledgement of queued alarms shall be either on an individual basis or through a multiple alarm acknowledgement.
      4) Alarms returning to normal condition shall be printed and not cause an audible sound or require acknowledgment.
   d. Class 4:
      1) Routine maintenance or other types of warning alarms.
      2) Alarms to be printed only, with no display, no audible sound and no acknowledgment required.

9. Include an unacknowledged alarm indicator on display to alert operator that there are unacknowledged alarms in system. Operator shall be able to acknowledge alarms on an individual basis or through a multiple alarm acknowledge key, depending on alarm class.
10. To ensure that no alarm records are lost, it shall be possible to assign a backup printer to accept alarms in case of failure of primary printer.

G. Reports and Logs:
1. Include reporting software package that allows operator to select, modify, or create reports using DDC system I/O point data available.
2. Each report shall be definable as to data content, format, interval and date.
3. Report data shall be sampled and stored on DDC controller, within storage limits of DDC controller, and then uploaded to archive on server for historical reporting.
4. Operator shall be able to obtain real-time logs of all I/O points by type or status, such as alarm, point lockout, or normal.
5. Reports and logs shall be stored on server hard drives in a format that is readily accessible by other standard software applications, including spreadsheets and word processing.
6. Reports and logs shall be readily printed and set to be printed either on operator command or at a specific time each day.

H. Standard Reports: Standard DDC system reports shall be provided and operator shall be able to customize reports later.
1. All I/O: With current status and values.
2. Alarm: All current alarms, except those in alarm lockout.
3. Disabled I/O: All I/O points that are disabled.
4. Alarm Lockout I/O: All I/O points in alarm lockout, whether manual or automatic.
5. Alarm Lockout I/O in Alarm: All I/O in alarm lockout that are currently in alarm.
6. Logs:
a. Alarm history.
b. System messages.
c. System events.
d. Trends.

I. Custom Reports: Operator shall be able to easily define any system data into a daily, weekly, monthly, or annual report. Reports shall be time and date stamped and shall contain a report title.

J. Standard Trends:
1. Trend all I/O point present values, set points, and other parameters indicated for trending.
2. Trends shall be associated into groups, and a trend report shall be set up for each group.
3. Trends shall be stored within DDC controller and uploaded to hard drives automatically on reaching 75 of DDC controller buffer limit, or by operator request, or by archiving time schedule.
4. Preset trend intervals for each I/O point after review with Owner.
5. Trend intervals shall be operator selectable from 10 seconds up to 60 minutes. Minimum number of consecutive trend values stored at one time shall be 100 per variable.
6. When drive storage memory is full, most recent data shall overwrite oldest data.
7. Archived and real-time trend data shall be available for viewing numerically and graphically by operators.

K. Custom Trends: Operator shall be able to define a custom trend log for any I/O point in DDC system.
1. Each trend shall include interval, start time, and stop time.
2. Data shall be sampled and stored on DDC controller, within storage limits of DDC controller, and then uploaded to archive on server hard drives.
3. Data shall be retrievable for use in spreadsheets and standard database programs.

L. Programming Software:
1. Include programming software to execute sequences of operation indicated.
2. Include programming routines in simple and easy to follow logic with detailed text comments describing what the logic does and how it corresponds to sequence of operation.
3. Programming software shall be as follows:
a. Graphic Based: Programming shall use a library of function blocks made from preprogrammed code designed for DDC control systems.

1) Function blocks shall be assembled with interconnection lines that represent to control sequence in a flowchart.
2) Programming tools shall be viewable in real time to show present values and logical results of each function block.

b. Menu Based: Programming shall be done by entering parameters, definitions, conditions, requirements and constraints.

c. Line by Line and Text Based: Programming shall declare variable types such as local, global, real, integer, and so on, at the beginning of the program. Use descriptive comments frequently to describe programming code.

4. Include means for detecting programming errors and testing software control strategies with a simulation tool before implementing in actual control. Simulation tool may be inherent with programming software or as a separate product.

M. Database Management Software:

1. Where a separate SQL database is used for information storage, DDC system shall include database management software that separates database monitoring and managing functions by supporting multiple separate windows.
2. Database secure access shall be accomplished using standard SQL authentication including ability to access data for use outside of DDC system applications.
3. Database management function shall include summarized information on trend, alarm, event, and audit for the following database management actions:
   a. Backup.
   b. Purge.
   c. Restore.
4. Database management software shall support the following:
   a. Statistics: Display database server information and trend, alarm, event, and audit information on database.
   b. Maintenance: Include method of purging records from trend, alarm, event and audit databases by supporting separate screens for creating a backup before purging, selecting database, and allowing for retention of a selected number of day's data.
   c. Backup: Include means to create a database backup file and select a storage location.
   d. Restore: Include a restricted means of restoring a database by requiring operator to have proper security level.
5. Database management software shall include information of current database activity, including the following:
   a. Ready.
   b. Purging record from a database.
   c. Action failed.
   d. Refreshing statistics.
   e. Restoring database.
   f. Shrinking a database.
   g. Backing up a database.
   h. Resetting Internet information services.
   i. Starting network device manager.
   j. Shutting down the network device manager.
   k. Action successful.
6. Database management software monitoring functions shall continuously read database information once operator has logged on.
7. Include operator notification through on-screen pop-up display and e-mail message when database value has exceeded a warning or alarm limit.
8. Monitoring settings window shall have the following sections:
   a. Allow operator to set and review scan intervals and start times.
   b. E-mail: Allow operator to create and review e-mail and phone text messages to be delivered when a warning or an alarm is generated.
   c. Warning: Allow operator to define warning limit parameters, set reminder frequency and link e-mail message.

d. Alarm: Allow operator to define alarm limit parameters, set reminder frequency and link e-mail message.

e. Database Login: Protect system from unauthorized database manipulation by creating a read access and a write access for each of trend, alarm, event and audit databases as well as operator proper security access to restore a database.

9. Monitoring settings taskbar shall include the following informational icons:

a. Normal: Indicates by color and size, or other easily identifiable means that all databases are within their limits.

b. Warning: Indicates by color and size, or other easily identifiable means that one or more databases have exceeded their warning limit.

c. Alarm: Indicates by color and size, or other easily identifiable means that one or more databases have exceeded their alarm limit.

2.11 OFFICE APPLICATION SOFTWARE

A. Include current version of office application software at time of Substantial Completion.

B. Office application software package shall include multiple separate applications and use a common platform for all applications, similar to Microsoft's "Office Professional."

1. Database.
2. E-mail.
3. Presentation.
4. Publisher.
5. Spreadsheet.
6. Word processing.

2.12 ASHRAE 135 GATEWAYS

A. Include BACnet communication ports, whenever available as an equipment OEM standard option, for integration via a single communication cable. BACnet-controlled plant equipment includes, but is not limited to, boilers, chillers, and variable-speed drives.

B. Include gateways to connect BACnet to legacy systems, existing non-BACnet devices, and existing non-BACnet DDC-controlled equipment, only when specifically requested and approved by Owner.

C. Include with each gateway an interoperability schedule showing each point or event on legacy side that BACnet "client" will read, and each parameter that BACnet network will write to. Describe this interoperability of BACnet services, or BIBBs, defined in ASHRAE 135, Annex K.

D. Gateway Minimum Requirements:

1. Read and view all readable object properties on non-BACnet network to BACnet network and vice versa where applicable.
2. Write to all writeable object properties on non-BACnet network from BACnet network and vice versa where applicable.
3. Include single-pass (only one protocol to BACnet without intermediary protocols) translation from non-BACnet protocol to BACnet and vice versa.
4. Comply with requirements of Data Sharing Read Property, Data Sharing Write Property, Device Management Dynamic Device Binding-B, and Device Management Communication Control BIBBs according to ASHRAE 135.
5. Hardware, software, software licenses, and configuration tools for operator-to-gateway communications.
6. Backup programming and parameters on CD media and the ability to modify, download, backup, and restore gateway configuration.

2.13 DDC CONTROLLERS

A. DDC system shall consist of a combination of network controllers, programmable application controllers and application-specific controllers to satisfy performance requirements indicated.

B. DDC controllers shall perform monitoring, control, energy optimization and other requirements indicated.

C. DDC controllers shall use a multitasking, multiuser, real-time digital control microprocessor with a distributed network database and intelligence.

D. Each DDC controller shall be capable of full and complete operation as a completely independent unit and as a part of a DDC system wide distributed network.

E. Environment Requirements:
   1. Controller hardware shall be suitable for the anticipated ambient conditions.
   2. Controllers located in conditioned space shall be rated for operation at 32 to 120 deg F.
   3. Controllers located outdoors shall be rated for operation at 17 to 150 deg F.

F. Power and Noise Immunity:
   1. Controller shall operate at 90 to 110 percent of nominal voltage rating and shall perform an orderly shutdown below 80 percent of nominal voltage.
   2. Operation shall be protected against electrical noise of 5 to 120 Hz and from keyed radios with up to 5 W of power located within36 inches of enclosure.

G. DDC Controller Spare Processing Capacity:
   1. Include spare processing memory for each controller. RAM, PROM, or EEPROM will implement requirements indicated with the following spare memory:
      a. Network Controllers: 50 percent.
      b. Programmable Application Controllers: Not less than 80 percent.
      c. Application-Specific Controllers: Not less than 90 percent.
   2. Memory shall support DDC controller's operating system and database and shall include the following:
      a. Monitoring and control.
      b. Energy management, operation and optimization applications.
      c. Alarm management.
      d. Historical trend data of all connected I/O points.
      e. Maintenance applications.
      f. Operator interfaces.
      g. Monitoring of manual overrides.

H. DDC Controller Spare I/O Point Capacity: Include spare I/O point capacity for each controller as follows:
   1. Network Controllers:
      a. 10 percent of each AI, AO, BI, and BO point connected to controller.
      b. Minimum Spare I/O Points per Controller:
         1) AIs: Two.
         2) AOs: Two.
         3) BIs: Three.
         4) BOs: Three.
   2. Programmable Application Controllers:
      a. 10 percent of each AI, AO, BI, and BO point connected to controller.
      b. Minimum Spare I/O Points per Controller:
         1) AIs: Two.
         2) AOs: Two.
         3) BIs: Three.
         4) BOs: Three.
   3. Application-Specific Controllers:
      a. 10 percent of each AI, AO, BI, and BO point connected to controller.
      b. Minimum Spare I/O Points per Controller:
         1) AIs: One.
         2) AOs: One.
         3) BIs: One.
         4) BOs: One.

I. Maintenance and Support: Include the following features to facilitate maintenance and support:
   1. Mount microprocessor components on circuit cards for ease of removal and replacement.
   2. Means to quickly and easily disconnect controller from network.
   3. Means to quickly and easily access connect to field test equipment.
   4. Visual indication that controller electric power is on, of communication fault or trouble, and that controller is receiving and sending signals to network.

J. Input and Output Point Interface:
1. Hardwired input and output points shall connect to network, programmable application and application-specific controllers.
2. Input and output points shall be protected so shorting of point to itself, to another point, or to ground will not damage controller.
3. Input and output points shall be protected from voltage up to 24 V of any duration so that contact will not damage controller.
4. AIs:
a. AIs shall include monitoring of low-voltage (zero- to 10-V dc), current (4 to 20 mA) and resistance signals from thermistor and RTD sensors.
b. AIs shall be compatible with, and field configurable to, sensor and transmitters installed.
c. Controller AIs shall perform analog-to-digital (A-to-D) conversion with a minimum resolution of 64-bit or better to comply with accuracy requirements indicated.
d. Signal conditioning including transient rejection shall be provided for each AI.
e. Capable of being individually calibrated for zero and span.
f. Incorporate common-mode noise rejection of at least 50 dB from zero to 100 Hz for differential inputs, and normal-mode noise rejection of at least 20 dB at 60 Hz from a source impedance of 10000 ohms.
5. AOs:
a. Controller AOs shall perform analog-to-digital (A-to-D) conversion with a minimum resolution of 64-bit or better to comply with accuracy requirements indicated.
b. Output signals shall have a range of 4 to 20 mA dc or zero- to 10-V dc as required to include proper control of output device.
c. Capable of being individually calibrated for zero and span.
d. AOs shall not exhibit a drift of greater than 0.4 percent of range per year.
6. BIs:
a. Controller BIs shall accept contact closures and shall ignore transients of less than 5-ms duration.
b. Isolation and protection against an applied steady-state voltage of up to 180-V ac peak.
c. BIs shall include a wetting current of at least 12 mA to be compatible with commonly available control devices and shall be protected against effects of contact bounce and noise.
d. BIs shall sense "dry contact" closure without external power (other than that provided by the controller) being applied.
e. Pulse accumulation input points shall comply with all requirements of BIs and accept up to 10 pulses per second for pulse accumulation. Buffer shall be provided to totalize pulses. Pulse accumulator shall accept rates of at least 20 pulses per second. The totalized value shall be reset to zero on operator's command.
7. BOs:
a. Controller BOs shall include relay contact closures or triac outputs for momentary and maintained operation of output devices.
1) Relay contact closures shall have a minimum duration of 0.1 second. Relays shall include at least 180 V of isolation. Electromagnetic interference suppression shall be provided on all output lines to limit transients to non-damaging levels. Minimum contact rating shall be 1 A at 24-V ac.
2) Triac outputs shall include at least 180 V of isolation. Minimum contact rating shall be 1 A at 24-V ac.
b. BOs shall include for two-state operation or a pulsed low-voltage signal for pulse-width modulation control.
c. BOs shall be selectable for either normally open or normally closed operation.
d. Include tristate outputs (two coordinated BOs) for control of three-point floating-type electronic actuators without feedback.

2.14 NETWORK CONTROLLERS

A. General Network Controller Requirements:
1. Include adequate number of controllers to achieve performance indicated.

2. System shall consist of one or more independent, standalone, microprocessor-based network controllers to manage global strategies indicated.
3. Controller shall have enough memory to support its operating system, database, and programming requirements.
4. Data shall be shared between networked controllers and other network devices.
5. Operating system of controller shall manage input and output communication signals to allow distributed controllers to share real and virtual object information and allow for central monitoring and alarms.
6. Controllers that perform scheduling shall have a real-time clock.
7. Controller shall continually check status of its processor and memory circuits. If an abnormal operation is detected, controller shall assume a predetermined failure mode and generate an alarm notification.
8. Controllers shall be fully programmable.

B. Communication:
1. Network controllers shall communicate with other devices on DDC system Level one network.
2. Network controller also shall perform routing if connected to a network of programmable application and application-specific controllers.

C. Operator Interface:
1. Controller shall be equipped with a service communications port for connection to a portable operator's workstation.
2. Local Keypad and Display:
a. Equip controller with local keypad and digital display for interrogating and editing data.
b. Use of keypad and display shall require security password.

D. Serviceability:
1. Controller shall be equipped with diagnostic LEDs or other form of local visual indication of power, communication, and processor.
2. Wiring and cable connections shall be made to field-removable, modular terminal strips or to a termination card connected by a ribbon cable.
3. Controller shall maintain BIOS and programming information in event of a power loss for at least 96 hours.

2.15 PROGRAMMABLE APPLICATION CONTROLLERS

A. General Programmable Application Controller Requirements:
1. Include adequate number of controllers to achieve performance indicated.
2. Controller shall have enough memory to support its operating system, database, and programming requirements.
3. Data shall be shared between networked controllers and other network devices.
4. Operating system of controller shall manage input and output communication signals to allow distributed controllers to share real and virtual object information and allow for central monitoring and alarms.
5. Controllers that perform scheduling shall have a real-time clock.
6. Controller shall continually check status of its processor and memory circuits. If an abnormal operation is detected, controller shall assume a predetermined failure mode and generate an alarm notification.
7. Controllers shall be fully programmable.

B. Communication:
1. Programmable application controllers shall communicate with other devices on network.

C. Operator Interface:
1. Controller shall be equipped with a service communications port for connection to a portable operator's workstation.
2. Local Keypad and Display:
a. Equip controller with local keypad and digital display for interrogating and editing data.
b. Use of keypad and display shall require security password.

D. Serviceability:

1. Controller shall be equipped with diagnostic LEDs or other form of local visual indication of power, communication, and processor.
2. Wiring and cable connections shall be made to field-removable, modular terminal strips or to a termination card connected by a ribbon cable.
3. Controller shall maintain BIOS and programming information in event of a power loss for at least 72 hours.

2.16 APPLICATION-SPECIFIC CONTROLLERS

A. Description: Microprocessor-based controllers, which through hardware or firmware design are dedicated to control a specific piece of equipment. Controllers are not fully user-programmable but are configurable and customizable for operation of equipment they are designed to control.
   1. Capable of standalone operation and shall continue to include control functions without being connected to network.
   2. Data shall be shared between networked controllers and other network devices.
B. Communication: Application-specific controllers shall communicate with other application-specific controller and devices on network, and to programmable application and network controllers.
C. Operator Interface: Controller shall be equipped with a service communications port for connection to a portable operator's workstation.
D. Serviceability:
   1. Controller shall be equipped with diagnostic LEDs or other form of local visual indication of power, communication, and processor.
   2. Wiring and cable connections shall be made to field-removable, modular terminal strips or to a termination card connected by a ribbon cable.
   3. Controller shall use nonvolatile memory and maintain all BIOS and programming information in event of power loss.

2.17 CONTROLLER SOFTWARE

A. General Controller Software Requirements:
   1. Software applications shall reside and operate in controllers. Editing of applications shall occur at operator workstations.
   2. I/O points shall be identified by up to 30-character point name and up to 16-character point descriptor. Same names shall be used at operator workstations.
   3. Control functions shall be executed within controllers using DDC algorithms.
   4. Controllers shall be configured to use stored default values to ensure fail-safe operation. Default values shall be used when there is a failure of a connected input instrument or loss of communication of a global point value.
B. Security:
   1. Operator access shall be secured using individual security passwords and user names.
   2. Passwords shall restrict operator to points, applications, and system functions as assigned by system manager.
   3. Operator log-on and log-off attempts shall be recorded.
   4. System shall protect itself from unauthorized use by automatically logging off after last keystroke. The delay time shall be operator-definable.
C. Scheduling: Include capability to schedule each point or group of points in system. Each schedule shall consist of the following:
   1. Weekly Schedule:
      a. Include separate schedules for each day of week.
      b. Each schedule should include the capability for start, stop, optimal start, optimal stop, and night economizer.
      c. Each schedule may consist of up to 10 events.
      d. When a group of objects are scheduled together, include capability to adjust start and stop times for each member.
   2. Exception Schedules:
      a. Include ability for operator to designate any day of the year as an exception schedule.

b. Exception schedules may be defined up to a year in advance. Once an exception schedule is executed, it will be discarded and replaced by regular schedule for that day of week.

3. Holiday Schedules:
   a. Include capability for operator to define up to 99 special or holiday schedules.
   b. Schedules may be placed on scheduling calendar and will be repeated each year.
   c. Operator shall be able to define length of each holiday period.

D. System Coordination:
   1. Include standard application for proper coordination of equipment.
   2. Application shall include operator with a method of grouping together equipment based on function and location.
   3. Group may then be used for scheduling and other applications.

E. Binary Alarms:
   1. Each binary point shall be set to alarm based on operator-specified state.
   2. Include capability to automatically and manually disable alarming.

F. Analog Alarms:
   1. Each analog object shall have both high and low alarm limits.
   2. Alarming shall be able to be automatically and manually disabled.

G. Alarm Reporting:
   1. Operator shall be able to determine action to be taken in event of an alarm.
   2. Alarms shall be routed to appropriate operator workstations based on time and other conditions.
   3. Alarm shall be able to start programs, print, be logged in event log, generate custom messages, and display graphics.

H. Remote Communication:
   1. System shall have ability to dial out in the event of an alarm.

I. Electric Power Demand Limiting:
   1. Demand-limiting program shall monitor building or other operator-defined electric power consumption from signals connected to electric power meter or from a watt transducer or current transformer.
   2. Demand-limiting program shall predict probable power demand such that action can be taken to prevent exceeding demand limit. When demand prediction exceeds demand limit, action will be taken to reduce loads in a predetermined manner. When demand prediction indicates demand limit will not be exceeded, action will be taken to restore loads in a predetermined manner.
   3. Demand reduction shall be accomplished by the following means:
      a. Reset air-handling unit supply temperature set points.
      b. Reset space temperature set points.
      c. De-energize equipment based on priority.
   4. Demand-limiting parameters, frequency of calculations, time intervals, and other relevant variables shall be based on the means by which electric power service provider computes demand charges.
   5. Include demand-limiting prediction and control for any individual meter monitored by system or for total of any combination of meters.
   6. Include means operator to make the following changes online:
      a. Addition and deletion of loads controlled.
      b. Changes in demand intervals.
      c. Changes in demand limit for meter(s).
      d. Maximum shutoff time for equipment.
      e. Minimum shutoff time for equipment.
      f. Select rotational or sequential shedding and restoring.
      g. Shed and restore priority.
   7. Include the following information and reports, to be available on an hourly, daily, weekly, monthly and annual basis:
      a. Total electric consumption.
      b. Peak demand.
      c. Date and time of peak demand.
      d. Daily peak demand.

J. Maintenance Management: System shall monitor equipment status and generate maintenance messages based on operator-designated run-time, starts, and calendar date limits.

K. Sequencing: Include application software based on sequences of operation indicated to properly sequence chillers, boilers, and other applicable HVAC equipment.

L. Control Loops:
   1. Support any of the following control loops, as applicable to control required:
      a. Two-position (on/off, open/close, slow/fast) control.
      b. Proportional control.
      c. Proportional plus integral (PI) control.
      d. Proportional plus integral plus derivative (PID) control.
         1) Include PID algorithms with direct or reverse action and anti-windup.
         2) Algorithm shall calculate a time-varying analog value used to position an output or stage a series of outputs.
         3) Controlled variable, set point, and PID gains shall be operator-selectable.
      e. Adaptive (automatic tuning).

M. Staggered Start: Application shall prevent all controlled equipment from simultaneously restarting after a power outage. Order which equipment (or groups of equipment) is started, along with the time delay between starts, shall be operator-selectable.

N. Energy Calculations:
   1. Include software to allow instantaneous power or flow rates to be accumulated and converted to energy usage data.
   2. Include an algorithm that calculates a sliding-window average (rolling average). Algorithm shall be flexible to allow window intervals to be operator specified (such as 15, 30, or 60 minutes).
   3. Include an algorithm that calculates a fixed-window average. A digital input signal shall define start of window period (such as signal from utility meter) to synchronize fixed-window average with that used by utility.

O. Anti-Short Cycling:
   1. BO points shall be protected from short cycling.
   2. Feature shall allow minimum on-time and off-time to be selected.

P. On and Off Control with Differential:
   1. Include an algorithm that allows a BO to be cycled based on a controlled variable and set point.
   2. Algorithm shall be direct- or reverse-acting and incorporate an adjustable differential.

Q. Run-Time Totalization:
   1. Include software to totalize run-times for all BI and BO points.
   2. A high run-time alarm shall be assigned, if required, by operator.

2.18 ENCLOSURES

A. General Enclosure Requirements:
   1. House each controller and associated control accessories in a single enclosure. Enclosure shall serve as central tie-in point for control devices such as switches, transmitters, transducers, power supplies and transformers.
   2. Do not house more than one controller in a single enclosure.
   3. Include enclosure door with key locking mechanism. Key locks alike for all enclosures and include one pair of keys per enclosure.
   4. Equip doors of enclosures housing controllers and components with analog or digital displays with windows to allow visual observation of displays without opening enclosure door.
   5. Individual wall-mounted single-door enclosures shall not exceed 36 inches wide and 60 inches high.
   6. Include wall-mounted enclosures with brackets suitable for mounting enclosures to wall or freestanding support stand as indicated.
   7. Supply each enclosure with a complete set of as-built schematics, tubing, and wiring diagrams and product literature located in a pocket on inside of door.

B. Internal Arrangement:
   1. Internal layout of enclosure shall group and protect pneumatic, electric, and electronic components associated with a controller, but not an integral part of controller.

2. Arrange layout to group similar products together.
3. Include a barrier between line-voltage and low-voltage electrical and electronic products.
4. Factory or shop install products, tubing, cabling and wiring complying with requirements and standards indicated.
5. Terminate field cable and wire using heavy-duty terminal blocks.
6. Include spare terminals, equal to not less than 10 percent of used terminals.
7. Include spade lugs for stranded cable and wire.
8. Install a maximum of two wires on each side of a terminal.
9. Include enclosure field power supply with a toggle-type switch located at entrance inside enclosure to disconnect power.
10. Include enclosure with a line-voltage nominal 20-A GFCI duplex receptacle for service and testing tools. Wire receptacle on hot side of enclosure disconnect switch and include with a 5-A circuit breaker.
11. Mount products within enclosure on removable internal panel(s).
12. Include products mounted in enclosures with engraved, laminated phenolic nameplates (black letters on a white background). The nameplates shall have at least 1/4-inch-high lettering.
13. Route tubing cable and wire located inside enclosure within a raceway with a continuous removable cover.
14. Label each end of cable, wire and tubing in enclosure following an approved identification system that extends from field I/O connection and all intermediate connections throughout length to controller connection.
15. Size enclosure internal panel to include at least 25 percent spare area on face of panel.

C. Environmental Requirements:
1. Evaluate temperature and humidity requirements of each product to be installed within each enclosure.
2. Calculate enclosure internal operating temperature considering heat dissipation of all products installed within enclosure and ambient effects (solar, conduction and wind) on enclosure.
3. Where required by application, include temperature-controlled electrical heat to maintain inside of enclosure above minimum operating temperature of product with most stringent requirement.
4. Where required by application, include temperature-controlled ventilation fans with filtered louver(s) to maintain inside of enclosure below maximum operating temperature of product with most stringent requirement.

D. Wall-Mounted, NEMA 250, Type 1:
1. Enclosure shall be NRTL listed according to UL 50 or UL 50E.
2. Construct enclosure of steel.
3. Finish enclosure inside and out with polyester powder coating that is electrostatically applied and then baked to bond to substrate.
   a. Exterior color shall be ANSI 61 gray.
   b. Interior color shall be ANSI 61 gray.
4. Hinged door full size of front face of enclosure and supported using:
   a. Enclosures sizes less than 36 in. tall: Multiple butt hinges.
   b. Enclosures sizes 36 in. tall and larger: Continuous piano hinges.
5. Removable internal panel with a white polyester powder coating that is electrostatically applied and then baked to bond to substrate.
   a. Size less than 24 in.: Solid or Perforated steel, 0.053 in. thick.
   b. Size 24 in. and larger: Solid steel, 0.093 in. thick.
6. Internal panel mounting hardware, grounding hardware and sealing washers.
7. Grounding stud on enclosure body.
8. Thermoplastic pocket on inside of door for record Drawings and Product Data.

E. Wall Mounted NEMA 250, Types 4 and 12:
1. Enclosure shall be NRTL listed according to UL 508A.
2. Seam and joints are continuously welded and ground smooth.
3. Where recessed enclosures are indicated, include enclosures with face flange for flush mounting.
4. Externally formed body flange around perimeter of enclosure face for continuous perimeter seamless gasket door seal.

5. Single-door enclosure sizes up to 60 inches tall by 36 inches wide.
6. Double-door enclosure sizes up to 36 inches tall by 60 inches wide.
7. Construct enclosure of steel, not less than the following:
    a. Size Less Than 24 Inches: 0.053 inch thick.
    b. Size 24 Inches and Larger: 0.067 inch thick.
8. Finish enclosure with polyester powder coating that is electrostatically applied and then baked to bond to substrate.
    a. Exterior color shall be ANSI 61 gray
    b. Interior color shall be ANSI 61 gray.
9. Corner-formed door, full size of enclosure face, supported using multiple concealed hinges with easily removable hinge pins.
    a. Sizes through 24 Inches Tall: Two hinges.
    b. Sizes between 24 Inches through 48 Inches Tall: Three hinges.
    c. Sizes Larger 48 Inches Tall: Four hinges.
10. Removable internal panel with a white polyester powder coating that is electrostatically applied and then baked to bond to substrate.
    a. Size Less Than 24 Inches: Solid steel, 0.053 inch thick.
    b. Size 24 Inches and Larger: Solid steel, 0.093 inch thick.
11. Internal panel mounting studs with hardware, grounding hardware, and sealing washers.
12. Grounding stud on enclosure body.
13. Thermoplastic pocket on inside of door for record Drawings and Product Data.

2.19 RELAYS

A. General-Purpose Relays:
1. Relays shall be heavy duty and rated for at least 10 A at 250-V ac and 60 Hz.
2. Relays shall be either double pole double throw (DPDT) or three-pole double throw, depending on the control application.
3. Use a plug-in-style relay with an eight-pin octal plug for DPDT relays and an 11-pin octal plug for three-pole double-throw relays.
4. Construct the contacts of either silver cadmium oxide or gold.
5. Enclose the relay in a clear transparent polycarbonate dust-tight cover.
6. Relays shall have LED indication and a manual reset and push-to-test button.
7. Performance:
    a. Mechanical Life: At least 10 million cycles.
    b. Electrical Life: At least 100,000 cycles at rated load.
    c. Pickup Time: 15 ms or less.
    d. Dropout Time: 10 ms or less.
    e. Pull-in Voltage: 85 percent of rated voltage.
    f. Dropout Voltage: 50 percent of nominal rated voltage.
    g. Power Consumption: 2 VA.
    h. Ambient Operating Temperatures: Minus 40 to 115 deg F.
8. Equip relays with coil transient suppression to limit transients to non-damaging levels.
9. Plug each relay into an industry-standard, 35-mm DIN rail socket. Plug all relays located in control panels into sockets that are mounted on a DIN rail.
10. Relay socket shall have screw terminals. Mold into the socket the coincident screw terminal numbers and associated octal pin numbers.

B. Multifunction Time-Delay Relays:
1. Relays shall be continuous duty and rated for at least 10 A at 240-V ac and 60 Hz.
2. Relays shall be DPDT relay with up to eight programmable functions to provide on/off delay, interval and recycle timing functions.
3. Use a plug-in-style relay with either an 8- or 11-pin octal plug.
4. Construct the contacts of either silver cadmium oxide or gold.
5. Enclose the relay in a dust-tight cover.

6. Include knob and dial scale for setting delay time.
7. Performance:
    a. Mechanical Life: At least 10 million cycles.
    b. Electrical Life: At least 100,000 cycles at rated load.
    c. Timing Ranges: Multiple ranges from 0.1 seconds to 100 minutes.
    d. Repeatability: Within 2 percent.
    e. Recycle Time: 45 ms.
    f. Minimum Pulse Width Control: 50 ms.
    g. Power Consumption: 5 VA or less at 120-V ac.
    h. Ambient Operating Temperatures: Minus 40 to 115 deg F.
8. Equip relays with coil transient suppression to limit transients to non-damaging levels.
9. Plug each relay into an industry-standard, 35-mm DIN rail socket. Plug all relays located in control panels into sockets that are mounted on a DIN rail.
10. Relay socket shall have screw terminals. Mold into the socket the coincident screw terminal numbers and associated octal pin numbers.

C. Latching Relays:
1. Relays shall be continuous duty and rated for at least 10 A at 250-V ac and 60 Hz.
2. Relays shall be either DPDT or three-pole double throw, depending on the control application.
3. Use a plug-in-style relay with a multibladed plug.
4. Construct the contacts of either silver cadmium oxide or gold.
5. Enclose the relay in a clear transparent polycarbonate dust-tight cover.
6. Performance:
    a. Mechanical Life: At least 10 million cycles.
    b. Electrical Life: At least 100,000 cycles at rated load.
    c. Pickup Time: 15 ms or less.
    d. Dropout Time: 10 ms or less.
    e. Pull-in Voltage: 85 percent of rated voltage.
    f. Dropout Voltage: 50 percent of nominal rated voltage.
    g. Power Consumption: 2 VA.
    h. Ambient Operating Temperatures: Minus 40 to 115 deg F.
7. Equip relays with coil transient suppression to limit transients to non-damaging levels.
8. Plug each relay into an industry-standard, 35-mm DIN rail socket. Plug all relays located in control panels into sockets that are mounted on a DIN rail.
9. Relay socket shall have screw terminals. Mold into the socket the coincident screw terminal numbers and associated octal pin numbers.

D. Current Sensing Relay:
1. Monitors ac current.
2. Independent adjustable controls for pickup and dropout current.
3. Energized when supply voltage is present and current is above pickup setting.
4. De-energizes when monitored current is below dropout current.
5. Dropout current is adjustable from 50 to 95 percent of pickup current.
6. Include a current transformer, if required for application.
7. House current sensing relay and current transformer in its own enclosure. Use NEMA 250, Type 12 enclosure for indoors and NEMA 250, Type 4 for outdoors.

E. Combination On-Off Status Sensor and On-Off Relay:
1. Description:
    a. On-off control and status indication in a single device.
    b. LED status indication of activated relay and current trigger.
    c. Closed-Open-Auto override switch located on the load side of the relay.
2. Performance:
    a. Ambient Temperature: Minus 30 to 140 deg F.
    b. Voltage Rating: Single-phase loads rated for 300-V ac. Three-phase loads rated for 600-V ac.

3. Status Indication:
    a. Current Sensor: Integral sensing for single-phase loads up to 20 A and external solid or split sensing ring for three-phase loads up to 150 A.
    b. Current Sensor Range: As required by application.
    c. Current Set Point: Fixed or adjustable as required by application.
    d. Current Sensor Output:
        1) Solid-state, single-pole double-throw contact rated for 30-V ac and dc and for 0.4 A.
        2) Solid-state, single-pole double-throw contact rated for 120-V ac and 1.0 A.
        3) Analog, zero- to 5- or 10-V dc.
        4) Analog, 4 to 20 mA, loop powered.
4. Relay: Single-pole double-throw, continuous-duty coil; rated for 10-million mechanical cycles.
5. Enclosure: NEMA 250, Type 1 enclosure.

2.20 ELECTRICAL POWER DEVICES

A. Transformers:
    1. Transformer shall be sized for the total connected load, plus an additional 25 percent of connected load.
    2. Transformer shall be at least 40 VA.
    3. Transformer shall have both primary and secondary fuses.
B. DC Power Supply:
    1. Plug-in style suitable for mating with a standard eight-pin octal socket. Include the power supply with a mating mounting socket.
    2. Enclose circuitry in a housing.
    3. Include both line and load regulation to ensure a stable output. To protect both the power supply and the load, power supply shall have an automatic current limiting circuit.
    4. Performance:
        a. Output voltage nominally 25-V dc within 5 percent.
        b. Output current up to 100 mA.
        c. Input voltage nominally 120-V ac, 60 Hz.
        d. Load regulation within 0.5 percent from zero- to 100-mA load.
        e. Line regulation within 0.5 percent at a 100-mA load for a 10 percent line change.
        f. Stability within 0.1 percent of rated volts for 24 hours after a 20-minute warmup.

2.21 CONTROL WIRE AND CABLE

A. Wire: Single conductor control wiring above 24 V.
    1. Wire size shall be at least No. 18 AWG.
    2. Conductor shall be 7/24 soft annealed copper strand with 2- to 2.5-inch lay.
    3. Conductor insulation shall be 600 V, Type THWN or Type THHN, and 90 deg C according to UL 83.
    4. Conductor colors shall be black (hot), white (neutral), and green (ground).
    5. Furnish wire on spools.
B. Single Twisted Shielded Instrumentation Cable above 24 V:
    1. Wire size shall be a minimum No. 18 AWG.
    2. Conductors shall be a twisted, 7/24 soft annealed copper strand with a 2- to 2.5-inch lay.
    3. Conductor insulation shall have a Type THHN/THWN or Type TFN rating.
    4. Shielding shall be 100 percent type, 0.35/0.5-mil aluminum/Mylar tape, helically applied with 25 percent overlap, and aluminum side in with tinned copper drain wire.
    5. Outer jacket insulation shall have a 600-V, 90-deg C rating and shall be Type TC cable.
    6. For twisted pair, conductor colors shall be black and white. For twisted triad, conductor colors shall be black, red and white.
    7. Furnish wire on spools.
C. Single Twisted Shielded Instrumentation Cable 24 V and Less:
    1. Wire size shall be a minimum No. 18 AWG.

2. Conductors shall be a twisted, 7/24 soft annealed copper stranding with a 2- to 2.5-inch lay.
3. Conductor insulation shall have a nominal 15-mil thickness, constructed from flame-retardant PVC.
4. Shielding shall be 100 percent type, 1.35-mil aluminum/polymer tape, helically applied with 25 percent overlap, and aluminum side in with tinned copper drain wire.
5. Outer jacket insulation shall have a 300-V, 105-deg C rating and shall be Type PLTC cable.
6. For twisted pair, conductor colors shall be black and white. For twisted triad, conductor colors shall be black, red and white.
7. Furnish wire on spools.

D. LAN and Communication Cable: Comply with DDC system manufacturer requirements for network being installed.
1. Cable shall be balanced twisted pair.
2. Cable shall be plenum rated.
3. Cable shall comply with NFPA 70.
4. Cable shall have a unique color that is different from other cables used on Project.

2.22 CONTROL POWER WIRING AND RACEWAYS

A. Comply with requirements in Section 260519 "Low-Voltage Electrical Power Conductors and Cables" electrical power conductors and cables.

B. Comply with requirements in Section 260533 "Raceways and Boxes for Electrical Systems" for electrical power raceways and boxes.

2.23 ACCESSORIES

A. Damper Blade Limit Switches:
1. Sense positive open and/or closed position of the damper blades.
2. NEMA 250, Type 13, oil-tight construction.
3. Arrange for the mounting application.
4. Additional waterproof enclosure when required by its environment.
5. Arrange to prevent "over-center" operation.

2.24 IDENTIFICATION

A. Control Equipment, Instruments, and Control Devices:
1. Engraved tag bearing unique identification.
a. Include instruments with unique identification identified by equipment being controlled or monitored, followed by point identification.
2. Letter size shall be as follows:
a. Operator Workstations: Minimum of 0.5 inch high.
b. DDC Controllers: Minimum of 0.5 inch high.
c. Gateways: Minimum of 0.5 inch high.
d. Repeaters: Minimum of 0.5 inch high.
e. Enclosures: Minimum of 0.5 inch high.
f. Electrical Power Devices: Minimum of 0.25 inch high.
g. Accessories: Minimum of 0.25 inch high.
h. Instruments: Minimum of 0.25 inch high.
i. Control Damper and Valve Actuators: Minimum of 0.25 inch high.
3. Tag shall consist of white lettering on black background.
4. Tag shall be engraved phenolic consisting of three layers of rigid laminate. Top and bottom layers are color-coded black with contrasting white center exposed by engraving through outer layer.
5. Tag shall be fastened with drive pins.
6. Instruments, control devices and actuators with Project-specific identification tags having unique identification numbers following requirements indicated and provided by original manufacturer do not require an additional tag.

B. Equipment Warning Labels:
1. Acrylic label with pressure-sensitive adhesive back and peel-off protective jacket.

2. Lettering size shall be at least 14-point type with white lettering on red background.
3. Warning label shall read "CAUTION-Equipment operated under remote automatic control and may start or stop at any time without warning. Switch electric power disconnecting means to OFF position before servicing."
4. Lettering shall be enclosed in a white line border. Edge of label shall extend at least 0.25 inch beyond white border.

2.25 SOURCE QUALITY CONTROL

A. Product(s) and material(s) will be considered defective if they do not pass tests and inspections.
B. Prepare test and inspection reports.

PART 3 EXECUTION

3.1 EXAMINATION

A. Examine substrates and conditions for compliance with requirements for installation tolerances and other conditions affecting performance of the Work.
   1. Verify compatibility with and suitability of substrates.
B. Examine roughing-in for products to verify actual locations of connections before installation.
   1. Examine roughing-in for instruments installed in piping to verify actual locations of connections before installation.
   2. Examine roughing-in for instruments installed in duct systems to verify actual locations of connections before installation.
C. Examine walls, floors, roofs, and ceilings for suitable conditions where product will be installed.
D. Prepare written report, endorsed by Installer, listing conditions detrimental to performance of the Work.
E. Proceed with installation only after unsatisfactory conditions have been corrected.

3.2 DDC SYSTEM INTERFACE WITH OTHER SYSTEMS AND EQUIPMENT

A. Communication Interface to Equipment with Integral Controls:
   1. DDC system shall have communication interface with equipment having integral controls and having a communication interface for remote monitoring or control.

3.3 CONTROL DEVICES FOR INSTALLATION BY INSTALLERS

A. Deliver selected control devices, specified in indicated HVAC instrumentation and control device Sections, to identified equipment and systems manufacturers for factory installation and to identified installers for field installation.
B. Deliver the following to plumbing and HVAC piping installers for installation in piping. Include installation instructions to Installer and supervise installation for compliance with requirements.

3.4 CONTROL DEVICES FOR EQUIPMENT MANUFACTURER FACTORY INSTALLATION

A. Deliver the following to air-handling unit manufacturer for factory installation. Include installation instructions to air-handling unit manufacturer and supervise installation for compliance with requirements.
   1. Programmable application or application-specific controller.
   2. Unit-mounted temperature sensors, switches and transmitters. Air-temperature sensors, switches, and transmitters are specified in Section 230923.27 "Temperature Instruments."
   3. Relays.
B. Deliver the following to terminal unit manufacturer for factory installation. Include installation instructions to terminal unit manufacturer.
   1. Programmable application or application-specific controller.
   2. Unit-mounted temperature sensors. Air-temperature sensors, switches, and transmitters are specified in Section 230923.27 "Temperature Instruments."
   3. Relays.

C. Deliver the following to fan-coil unit manufacturer for factory installation. Include installation instructions to fan-coil unit manufacturer.
   1. Programmable application or application-specific controller.
   2. Unit-mounted temperature sensors. Air-temperature sensors, switches, and transmitters are specified in Section 230923.27 "Temperature Instruments."
   3. Relays.

3.5 GENERAL INSTALLATION REQUIREMENTS

A. Install products to satisfy more stringent of all requirements indicated.
B. Install products level, plumb, parallel, and perpendicular with building construction.
C. Support products, tubing, piping wiring and raceways. Brace products to prevent lateral movement and sway or a break in attachment when subjected to a seismic force.
D. If codes and referenced standards are more stringent than requirements indicated, comply with requirements in codes and referenced standards.
E. Fabricate openings and install sleeves in ceilings, floors, roof, and walls required by installation of products. Before proceeding with drilling, punching, and cutting, check for concealed work to avoid damage. Patch, flash, grout, seal, and refinish openings to match adjacent condition.
F. Firestop Penetrations Made in Fire-Rated Assemblies: Comply with requirements in Section 078413 "Penetration Firestopping."
G. Seal penetrations made in acoustically rated assemblies. Comply with requirements in Section 079200 "Joint Sealants."
H. Welding Requirements:
   1. Restrict welding and burning to supports and bracing.
   2. No equipment shall be cut or welded without approval. Welding or cutting will not be approved if there is risk of damage to adjacent Work.
   3. Welding, where approved, shall be by inert-gas electric arc process and shall be performed by qualified welders according to applicable welding codes.
   4. If requested on-site, show satisfactory evidence of welder certificates indicating ability to perform welding work intended.
I. Fastening Hardware:
   1. Stillson wrenches, pliers, and other tools that damage surfaces of rods, nuts, and other parts are prohibited for work of assembling and tightening fasteners.
   2. Tighten bolts and nuts firmly and uniformly. Do not overstress threads by excessive force or by oversized wrenches.
   3. Lubricate threads of bolts, nuts and screws with graphite and oil before assembly.
J. If product locations are not indicated, install products in locations that are accessible and that will permit service and maintenance from floor, equipment platforms, or catwalks without removal of permanently installed furniture and equipment.

3.6 OPERATOR WORKSTATION INSTALLATION

A. Portable Workstations Installation:
   1. Turn over portable workstations to Owner at Substantial Completion.
   2. Install software on workstation(s) and verify software functions properly.
B. Color Graphics Application:
   1. Use system schematics indicated as starting point to create graphics.
   2. Develop Project-specific library of symbols for representing system equipment and products.
   3. Incorporate digital images of Project-completed installation into graphics where beneficial to enhance effect.
   4. Submit sketch of graphic layout with description of all text for each graphic for Owner's review before creating graphic using graphics software.
   5. Seek Owner input in graphics development once using graphics software.
   6. Final editing shall be done on-site with Owner's review and feedback.
   7. Refine graphics as necessary for Owner acceptance.

8. On receiving Owner acceptance, print a hard copy for inclusion in operation and maintenance manual. Prepare a scanned copy PDF file of each graphic and include with softcopy of DDC system operation and maintenance manual.

3.7 GATEWAY INSTALLATION

A. Install gateways if required for DDC system communication interface requirements indicated.
   1. Install gateway(s) required.
B. Test gateway to verify that communication interface functions properly.

3.8 ROUTER INSTALLATION

A. Install routers if required for DDC system communication interface requirements indicated.
   1. Install router(s) required.
B. Test router to verify that communication interface functions properly.

3.9 CONTROLLER INSTALLATION

A. Install controllers in enclosures to comply with indicated requirements.
B. Connect controllers to field power supply.
C. Install controller with latest version of applicable software and configure to execute requirements indicated.
D. Test and adjust controllers to verify operation of connected I/O to achieve performance indicated requirements while executing sequences of operation.
E. Installation of Network Controllers:
   1. Quantity and location of network controllers shall be determined by DDC system manufacturer to satisfy requirements indicated.
   2. Install controllers in a protected location that is easily accessible by operators.
   3. Top of controller shall be within 72 inches of finished floor.
F. Installation of Programmable Application Controllers:
   1. Quantity and location of programmable application controllers shall be determined by DDC system manufacturer to satisfy requirements indicated.
   2. Install controllers in a protected location that is easily accessible by operators.
   3. Top of controller shall be within 72 inches of finished floor.
G. Application-Specific Controllers:
   1. Quantity and location of application-specific controllers shall be determined by DDC system manufacturer to satisfy requirements indicated.
   2. For controllers not mounted directly on equipment being controlled, install controllers in a protected location that is easily accessible by operators.

3.10 ENCLOSURES INSTALLATION

A. Install the following items in enclosures, to comply with indicated requirements:
   1. Gateways.
   2. Routers.
   3. Controllers.
   4. Electrical power devices.
   5. Relays.
   6. Accessories.
   7. Instruments.
   8. Actuators
B. Attach wall-mounted enclosures to wall using the following types of steel struts:
   1. For NEMA 250, Type 1 Enclosures: Use galvanized-steel strut and hardware.
   2. For NEMA 250, Type 4X Enclosures and Enclosures Located Outdoors: Use stainless-steel strut and hardware.
   3. Install plastic caps on exposed cut edges of strut.
C. Align top of adjacent enclosures of like size.

D. Install floor-mounted enclosures located on concrete housekeeping pads. Attach enclosure legs using galvanized- or stainless-steel anchors.

E. Install continuous and fully accessible wireways to connect conduit, wire, and cable to multiple adjacent enclosures. Wireway used for application shall have protection equal to NEMA 250 rating of connected enclosures.

3.11 ELECTRIC POWER CONNECTIONS

A. Connect electrical power to DDC system products requiring electrical power connections.

B. Design of electrical power to products not indicated with electric power is delegated to DDC system provider and installing trade. Work shall comply with NFPA 70 and other requirements indicated.

C. Comply with requirements in Section 262816 "Enclosed Switches and Circuit Breakers" for electrical power circuit breakers.

D. Comply with requirements in Section 260519 "Low-Voltage Electrical Power Conductors and Cables" for electrical power conductors and cables.

E. Comply with requirements in Section 260533 "Raceways and Boxes for Electrical Systems" for electrical power raceways and boxes.

3.12 IDENTIFICATION

A. Identify system components, wiring, cabling, and terminals. Comply with requirements in Section 260553 "Identification for Electrical Systems" for identification products and installation.

B. Install melamine plastic signs with unique identification on face for each of the following:
   1. Operator workstation.
   2. Gateway.
   3. Router.
   4. DDC controller.
   5. Enclosure.
   6. Electrical power device.
   7. Accessory.

C. Install unique instrument identification on face of each instrument connected to a DDC controller.

D. Install unique identification on face of each control damper and valve actuator connected to a DDC controller.

E. Where product is installed above accessible tile ceiling, also install matching identification on face of ceiling grid located directly below.

F. Where product is installed above an inaccessible ceiling, also install identification on face of access door directly below.

G. Warning Labels and Signs:
   1. Shall be permanently attached to equipment that can be automatically started by DDC control system.
   2. Shall be located in highly visible location near power service entry points.

3.13 NETWORK INSTALLATION

A. Install balanced twisted pair cable when connecting between the following network devices located in same building:
   1. Operator workstations.
   2. Operator workstations and network controllers.
   3. Network controllers.

B. Install balanced twisted pair cable when connecting between the following:
   1. Gateways.
   2. Gateways and network controllers or programmable application controllers.
   3. Routers.
   4. Routers and network controllers or programmable application controllers.
   5. Network controllers and programmable application controllers.
   6. Programmable application controllers.

7. Programmable application controllers and application-specific controllers.
8. Application-specific controllers.

C. Install cable in continuous raceway.
1. Where indicated on Drawings, cable trays may be used for copper cable in lieu of conduit.

3.14 NETWORK NAMING AND NUMBERING

A. Coordinate with Owner and provide unique naming and addressing for networks and devices.
B. ASHRAE 135 Networks:
1. MAC Address:
a. Every network device shall have an assigned and documented MAC address unique to its network.
b. Ethernet Networks: Document MAC address assigned at its creation.
c. ARCNET or MS/TP networks: Assign from 00 to 64.
2. Network Numbering:
a. Assign unique numbers to each new network.
b. Provide ability for changing network number through device switches or operator interface.
c. DDC system, with all possible connected LANs, can contain up to 65,534 unique networks.
3. Device Object Identifier Property Number:
a. Assign unique device object identifier property numbers or device instances for each device network.
b. Provide for future modification of device instance number by device switches or operator interface.
c. LAN shall support up to 4,194,302 unique devices.
4. Device Object Name Property Text:
a. Device object name property field shall support 32 minimum printable characters.
b. Assign unique device "Object Name" property names with plain-English descriptive names for each device.
1) Example 1: Device object name for device controlling boiler plant at Building 1000 would be "HW System B1000."
2) Example 2: Device object name for a VAV terminal unit controller could be "VAV unit 102".
5. Object Name Property Text for Other Than Device Objects:
a. Object name property field shall support 32 minimum printable characters.
b. Assign object name properties with plain-English names descriptive of application.
1) Example 1: "Zone 1 Temperature."
2) Example 2 "Fan Start and Stop."
6. Object Identifier Property Number for Other Than Device Objects:
a. Assign object identifier property numbers according to Drawings indicated.
b. If not indicated, object identifier property numbers may be assigned at Installer's discretion but must be approved by Owner in advance, be documented and be unique for like object types within device.

3.15 CONTROL WIRE, CABLE AND RACEWAYS INSTALLATION

A. Comply with NECA 1.
B. Wire and Cable Installation:
1. Comply with installation requirements in Section 260523 "Control-Voltage Electrical Power Cables."
2. Comply with installation requirements in Section 271313 "Communications Copper Backbone Cabling."
3. Comply with installation requirements in Section 271513 "Communications Copper Horizontal Cabling."
4. Install cables with protective sheathing that is waterproof and capable of withstanding continuous temperatures of 90 deg C with no measurable effect on physical and electrical properties of cable.
a. Provide shielding to prevent interference and distortion from adjacent cables and equipment.

5. Provide strain relief.
6. Terminate wiring in a junction box.
   a. Clamp cable over jacket in junction box.
   b. Individual conductors in the stripped section of the cable shall be slack between the clamping point and terminal block.
7. Terminate field wiring and cable not directly connected to instruments and control devices having integral wiring terminals using terminal blocks.
8. Install signal transmission components according to IEEE C2, REA Form 511a, NFPA 70, and as indicated.
9. Use shielded cable to transmitters.
10. Use shielded cable to temperature sensors.
11. Perform continuity and meager testing on wire and cable after installation.

C. Conduit Installation:
   1. Comply with Section "260533 "Raceways and Boxes for Electrical Systems" for control-voltage conductors.
   2. Comply with Section 270528 "Pathways for Communications Systems" for balanced twisted pair cabling and optical fiber installation.

3.16 FIELD QUALITY CONTROL

A. Testing Agency: Engage a qualified testing agency to perform tests and inspections.
B. Manufacturer's Field Service: Engage a factory-authorized service representative to test and inspect components, assemblies, and installations, including connections.
C. Perform the following tests and inspections:
   1. Perform each visual and mechanical inspection and electrical test stated in NETA Acceptance Testing Specification. Certify compliance with test parameters.
   2. Test and adjust controls and safeties. Replace damaged and malfunctioning controls and equipment.
D. Testing:
   1. Perform preinstallation, in-progress, and final tests, supplemented by additional tests, as necessary.
   2. Preinstallation Cable Verification: Verify integrity and serviceability for new cable lengths before installation. This assurance may be provided by using vendor verification documents, testing, or other methods. As a minimum, furnish evidence of verification for cable attenuation and bandwidth parameters.
   3. In-Progress Testing: Perform standard tests for correct pair identification and termination during installation to ensure proper installation and cable placement. Perform tests in addition to those specified if there is any reason to question condition of material furnished and installed. Testing accomplished is to be documented by agency conducting tests. Submit test results for Project record.
   4. Final Testing: Perform final test of installed system to demonstrate acceptability as installed. Testing shall be performed according to a test plan supplied by DDC system manufacturer. Defective Work or material shall be corrected and retested. As a minimum, final testing for cable system, including spare cable, shall verify conformance of attenuation, length, and bandwidth parameters with performance indicated.
   5. Test Equipment: Use an optical fiber time domain reflectometer for testing of length and optical connectivity.
   6. Test Results: Record test results and submit copy of test results for Project record.

3.17 DDC SYSTEM I/O CHECKOUT PROCEDURES

A. Check installed products before continuity tests, leak tests and calibration.
B. Check instruments for proper location and accessibility.
C. Check instruments for proper installation on direction of flow, elevation, orientation, insertion depth, or other applicable considerations that will impact performance.
D. Check instrument tubing for proper isolation, fittings, slope, dirt legs, drains, material and support.
E. For pneumatic products, verify that air supply for each product is properly installed.

F. Instrument Checkout:
   1. Verify that instrument is correctly installed for location, orientation, direction and operating clearances.
   2. Verify that attachment is properly secured and sealed.
   3. Verify that conduit connections are properly secured and sealed.
   4. Verify that wiring is properly labeled with unique identification, correct type and size and is securely attached to proper terminals.
   5. Inspect instrument tag against approved submittal.
   6. For instruments with tubing connections, verify that tubing attachment is secure and isolation valves have been provided.
   7. For flow instruments, verify that recommended upstream and downstream distances have been maintained.
   8. For temperature instruments:
      a. Verify sensing element type and proper material.
      b. Verify length and insertion.

3.18 DDC SYSTEM I/O ADJUSTMENT, CALIBRATION AND TESTING:

A. Calibrate each instrument installed that is not factory calibrated and provided with calibration documentation.
B. Provide a written description of proposed field procedures and equipment for calibrating each type of instrument. Submit procedures before calibration and adjustment.
C. For each analog instrument, make a three-point test of calibration for both linearity and accuracy.
D. Equipment and procedures used for calibration shall comply with instrument manufacturer's written instructions.
E. Provide diagnostic and test equipment for calibration and adjustment.
F. Field instruments and equipment used to test and calibrate installed instruments shall have accuracy at least twice the instrument accuracy being calibrated. An installed instrument with an accuracy of 1 percent shall be checked by an instrument with an accuracy of 0.5 percent.
G. Calibrate each instrument according to instrument instruction manual supplied by manufacturer.
H. If after calibration indicated performance cannot be achieved, replace out-of-tolerance instruments.
I. Comply with field testing requirements and procedures indicated by ASHRAE's Guideline 11, "Field Testing of HVAC Control Components," in the absence of specific requirements, and to supplement requirements indicated.
J. Analog Signals:
   1. Check analog voltage signals using a precision voltage meter at zero, 50, and 100 percent.
   2. Check analog current signals using a precision current meter at zero, 50, and 100 percent.
   3. Check resistance signals for temperature sensors at zero, 50, and 100 percent of operating span using a precision-resistant source.
K. Digital Signals:
   1. Check digital signals using a jumper wire.
   2. Check digital signals using an ohmmeter to test for contact making or breaking.
L. Meters: Check sensors at zero, 50, and 100 percent of Project design values.
M. Sensors: Check sensors at zero, 50, and 100 percent of Project design values.
N. Switches: Calibrate switches to make or break contact at set points indicated.
O. Transmitters:
   1. Check and calibrate transmitters at zero, 50, and 100 percent of Project design values.
   2. Calibrate resistance temperature transmitters at zero, 50, and 100 percent of span using a precision-resistant source.

3.19 DDC SYSTEM CONTROLLER CHECKOUT

A. Verify power supply.
   1. Verify voltage, phase and hertz.
   2. Verify that protection from power surges is installed and functioning.
   3. Verify that ground fault protection is installed.

4. If applicable, verify if connected to UPS unit.
5. If applicable, verify if connected to a backup power source.
6. If applicable, verify that power conditioning units, transient voltage suppression and high-frequency noise filter units are installed.

B. Verify that wire and cabling is properly secured to terminals and labeled with unique identification.

C. Verify that spare I/O capacity is provided.

3.20 DDC CONTROLLER I/O CONTROL LOOP TESTS

A. Testing:
1. Test every I/O point connected to DDC controller to verify that safety and operating control set points are as indicated and as required to operate controlled system safely and at optimum performance.
2. Test every I/O point throughout its full operating range.
3. Test every control loop to verify operation is stable and accurate.
4. Adjust control loop proportional, integral and derivative settings to achieve optimum performance while complying with performance requirements indicated. Document testing of each control loop's precision and stability via trend logs.
5. Test and adjust every control loop for proper operation according to sequence of operation.
6. Test software and hardware interlocks for proper operation. Correct deficiencies.
7. Operate each analog point at the following:
   a. Upper quarter of range.
   b. Lower quarter of range.
   c. At midpoint of range.
8. Exercise each binary point.
9. For every I/O point in DDC system, read and record each value at operator workstation, at DDC controller and at field instrument simultaneously. Value displayed at operator workstation, at DDC controller and at field instrument shall match.
10. Prepare and submit a report documenting results for each I/O point in DDC system and include in each I/O point a description of corrective measures and adjustments made to achieve desire results.

3.21 DDC SYSTEM VALIDATION TESTS

A. Perform validation tests before requesting final review of system. Before beginning testing, first submit Pretest Checklist and Test Plan.

B. After approval of Test Plan, execute all tests and procedures indicated in plan.

C. After testing is complete, submit completed test checklist.

D. Pretest Checklist: Submit the following list with items checked off once verified:
1. Detailed explanation for any items that are not completed or verified.
2. Required mechanical installation work is successfully completed and HVAC equipment is working correctly.
3. HVAC equipment motors operate below full-load amperage ratings.
4. Required DDC system components, wiring, and accessories are installed.
5. Installed DDC system architecture matches approved Drawings.
6. Control electric power circuits operate at proper voltage and are free from faults.
7. Required surge protection is installed.
8. DDC system network communications function properly, including uploading and downloading programming changes.
9. Using BACnet protocol analyzer, verify that communications are error free.
10. Each controller's programming is backed up.
11. Equipment, products, tubing, wiring cable and conduits are properly labeled.
12. All I/O points are programmed into controllers.
13. Testing, adjusting and balancing work affecting controls is complete.
14. Dampers and actuators zero and span adjustments are set properly.

15. Each control damper and actuator goes to failed position on loss of power.
16. Valves and actuators zero and span adjustments are set properly.
17. Each control valve and actuator goes to failed position on loss of power.
18. Meter, sensor and transmitter readings are accurate and calibrated.
19. Control loops are tuned for smooth and stable operation.
20. View trend data where applicable.
21. Each controller works properly in standalone mode.
22. Safety controls and devices function properly.
23. Interfaces with fire-alarm system function properly.
24. Electrical interlocks function properly.
25. Operator workstations and other interfaces are delivered, all system and database software is installed, and graphic are created.
26. Record Drawings are completed.

E. Test Plan:
1. Prepare and submit a validation test plan including test procedures for performance validation tests.
2. Test plan shall address all specified functions of DDC system and sequences of operation.
3. Explain detailed actions and expected results to demonstrate compliance with requirements indicated.
4. Explain method for simulating necessary conditions of operation used to demonstrate performance.
5. Include a test checklist to be used to check and initial that each test has been successfully completed.
6. Submit test plan documentation 10 business days before start of tests.

F. Validation Test:
1. Verify operating performance of each I/O point in DDC system.
   a. Verify analog I/O points at operating value.
   b. Make adjustments to out-of-tolerance I/O points.
      1) Identify I/O points for future reference.
      2) Simulate abnormal conditions to demonstrate proper function of safety devices.
      3) Replace instruments and controllers that cannot maintain performance indicated after adjustments.
2. Simulate conditions to demonstrate proper sequence of control.
3. Readjust settings to design values and observe ability of DDC system to establish desired conditions.
4. After 24 Hours following Initial Validation Test:
   a. Re-check I/O points that required corrections during initial test.
   b. Identify I/O points that still require additional correction and make corrections necessary to achieve desired results.
5. After 24 Hours of Second Validation Test:
   a. Re-check I/O points that required corrections during second test.
   b. Continue validation testing until I/O point is normal on two consecutive tests.
6. Completely check out, calibrate, and test all connected hardware and software to ensure that DDC system performs according to requirements indicated.
7. After validation testing is complete, prepare and submit a report indicating all I/O points that required correction and how many validation re-tests it took to pass. Identify adjustments made for each test and indicate instruments that were replaced.

G. DDC System Response Time Test:
1. Simulate HLC.
   a. Heavy load shall be an occurrence of 50 percent of total connected binary COV, one-half of which represent an "alarm" condition, and 50 percent of total connected analog COV, one-half of which represent an "alarm" condition, that are initiated simultaneously on a one-time basis.
2. Initiate 10 successive occurrences of HLC and measure response time to typical alarms and status changes.
3. Measure with a timer having at least 0.1-second resolution and 0.01 percent accuracy.

4. Purpose of test is to demonstrate DDC system, as follows:
    a. Reaction to COV and alarm conditions during HLC.
    b. Ability to update DDC system database during HLC.
5. Passing test is contingent on the following:
    a. Alarm reporting at printer beginning no more than two seconds after the initiation (time zero) of HLC.
    b. All alarms, both binary and analog, are reported and printed; none are lost.
    c. Compliance with response times specified.
6. Prepare and submit a report documenting HLC tested and results of test including time stamp and print out of all alarms.

H. DDC System Network Bandwidth Test:
1. Test network bandwidth usage on all DDC system networks to demonstrate bandwidth usage under DDC system normal operating conditions and under simulated HLC.
2. To pass, none of DDC system networks shall use more than 70 percent of available bandwidth under normal and HLC operation.

3.22 FINAL REVIEW

A. Submit written request to Construction Manager when DDC system is ready for final review. Written request shall state the following:
1. DDC system has been thoroughly inspected for compliance with contract documents and found to be in full compliance.
2. DDC system has been calibrated, adjusted and tested and found to comply with requirements of operational stability, accuracy, speed and other performance requirements indicated.
3. DDC system monitoring and control of HVAC systems results in operation according to sequences of operation indicated.
4. DDC system is complete and ready for final review.

B. Review by Construction Manager shall be made after receipt of written request. A field report shall be issued to document observations and deficiencies.

C. Take prompt action to remedy deficiencies indicated in field report and submit a second written request when all deficiencies have been corrected. Repeat process until no deficiencies are reported.

D. Should more than two reviews be required, DDC system manufacturer and Installer shall compensate entity performing review for total costs, labor and expenses, associated with third and subsequent reviews. Estimated cost of each review shall be submitted and approved by DDC system manufacturer and Installer before making the review.

E. Prepare and submit closeout submittals when no deficiencies are reported.

F. A part of DDC system final review shall include a demonstration to parties participating in final review.
1. Provide staff familiar with DDC system installed to demonstrate operation of DDC system during final review.
2. Provide testing equipment to demonstrate accuracy and other performance requirements of DDC system that is requested by reviewers during final review.
3. Demonstration shall include, but not be limited to, the following:
    a. Accuracy and calibration of 10 I/O points randomly selected by reviewers. If review finds that some I/O points are not properly calibrated and not satisfying performance requirements indicated, additional I/O points may be selected by reviewers until total I/O points being reviewed that satisfy requirements equals quantity indicated.
    b. HVAC equipment and system hardwired and software safeties and life-safety functions are operating according to sequence of operation. Up to 10 I/O points shall be randomly selected by reviewers. Additional I/O points may be selected by reviewers to discover problems with operation.
    c. Correct sequence of operation after electrical power interruption and resumption after electrical power is restored for randomly selected HVAC systems.
    d. Operation of randomly selected dampers and valves in normal-on, normal-off and failed positions.
    e. Reporting of alarm conditions for randomly selected alarms, including different classes of alarms, to ensure that alarms are properly received by operators and operator workstations.
    f. Trends, summaries, logs and reports set-up for Project.

g. For up to three HVAC systems randomly selected by reviewers, use graph trends to show that sequence of operation is executed in correct manner and that HVAC systems operate properly through complete sequence of operation including different modes of operations indicated. Show that control loops are stable and operating at set points and respond to changes in set point of 20 percent or more.

h. Software's ability to communicate with controllers, operator workstations, uploading and downloading of control programs.

i. Software's ability to edit control programs off-line.

j. Data entry to show Project-specific customizing capability including parameter changes.

k. Step through penetration tree, display all graphics, demonstrate dynamic update, and direct access to graphics.

l. Execution of digital and analog commands in graphic mode.

m. Spreadsheet and curve plot software and its integration with database.

n. Online user guide and help functions.

o. Multitasking by showing different operations occurring simultaneously on four quadrants of split screen.

p. System speed of response compared to requirements indicated.

q. For Each Network and Programmable Application Controller:

1) Memory: Programmed data, parameters, trend and alarm history collected during normal operation is not lost during power failure.

2) Operator Interface: Ability to connect directly to each type of digital controller with a portable operator workstation and mobile device. Show that maintenance personnel interface tools perform as indicated in manufacturer's technical literature.

3) Standalone Ability: Demonstrate that controllers provide stable and reliable standalone operation using default values or other method for values normally read over network.

4) Electric Power: Ability to disconnect any controller safely from its power source.

5) Wiring Labels: Match control drawings.

6) Network Communication: Ability to locate a controller's location on network and communication architecture matches Shop Drawings.

7) Nameplates and Tags: Accurate and permanently attached to control panel doors, instrument, actuators and devices.

r. For Each Operator Workstation:

1) I/O points lists agree with naming conventions.

2) Graphics are complete.

3) UPS unit, if applicable, operates.

s. Communications and Interoperability: Demonstrate proper interoperability of data sharing, alarm and event management, trending, scheduling, and device and network management. Use ASHRAE 135 protocol analyzer to help identify devices, view network traffic, and verify interoperability. Requirements must be met even if only one manufacturer's equipment is installed.

1) Data Presentation: On each operator workstation, demonstrate graphic display capabilities.

2) Reading of Any Property: Demonstrate ability to read and display any used readable object property of any device on network.

3) Set Point and Parameter Modifications: Show ability to modify set points and tuning parameters indicated. Modifications are made with messages and write services initiated by an operator using workstation graphics, or by completing a field in a menu with instructional text.

4) Peer-to-Peer Data Exchange: Network devices are installed and configured to perform without need for operator intervention to implement Project sequence of operation and to share global data.

5) Alarm and Event Management: Alarms and events are installed and prioritized according to Owner. Demonstrate that time delays and other logic are set up to avoid nuisance tripping. Show that operators with sufficient privileges are permitted.

6) Schedule Lists: Schedules are configured for start and stop, mode change, occupant overrides, and night setback as defined in sequence of operations.

7) Schedule Display and Modification: Ability to display any schedule with start and stop times for calendar year. Show that all calendar entries and schedules are modifiable from any connected operator workstation by an operator with sufficient privilege.
8) Archival Storage of Data: Data archiving is handled by operator workstation and server and local trend archiving and display is accomplished.
9) Modification of Trend Log Object Parameters: Operator with sufficient privilege can change logged data points, sampling rate, and trend duration.
10) Device and Network Management:
    (a) Display of network device status.
    (b) Display of BACnet Object Information.
    (c) Silencing devices transmitting erroneous data.
    (d) Time synchronization.
    (e) Remote device re-initialization.
    (f) Backup and restore network device programming and master database(s).
    (g) Configuration management of routers.

3.23 ADJUSTING

A. Occupancy Adjustments: When requested within 12 months from date of Substantial Completion, provide on-site assistance in adjusting system to suit actual occupied conditions. Provide up to two visits to Project during other-than-normal occupancy hours for this purpose.

3.24 MAINTENANCE SERVICE

A. Maintenance Service: Beginning at Substantial Completion, maintenance service shall include three months full maintenance by DDC system manufacturer's authorized service representative. Include monthly preventive maintenance, repair or replacement of worn or defective components, cleaning, calibration and adjusting as required for proper operation. Parts and supplies shall be manufacturer's authorized replacement parts and supplies.

3.25 SOFTWARE SERVICE AGREEMENT

A. Contractor shall verify the need for software support with owner prior to bid. The project site has an existing campus wide DDC system.
B. Technical Support: Beginning at Substantial Completion, service agreement shall include software support for one year
C. Upgrade Service: At Substantial Completion, update software to latest version. Install and program software upgrades that become available within one year(s) from date of Substantial Completion. Upgrading software shall include operating system and new or revised licenses for using software.
    1. Upgrade Notice: At least 30 days to allow Owner to schedule and access system and to upgrade computer equipment if necessary.

3.26 DEMONSTRATION

A. Engage a factory-authorized service representative with complete knowledge of Project-specific system installed to train Owner's maintenance personnel to adjust, operate, and maintain DDC system.
B. Extent of Training:
    1. Base extent of training on scope and complexity of DDC system indicated and training requirements indicated. Provide extent of training required to satisfy requirements indicated even if more than minimum training requirements are indicated.
    2. Inform Owner of anticipated training requirements if more than minimum training requirements are indicated.
    3. Minimum Training Requirements:
        a. Provide not less than 5 days of training total.
        b. Stagger training over multiple training classes to accommodate Owner's requirements. All training shall occur before end of warranty period.
        c. Total days of training shall be broken into not more than 5 separate training classes.
        d. Each training class shall be not less than one consecutive day.
C. Training Schedule:

1. Schedule training with Owner 20 business days before expected Substantial Completion.
2. Schedule training to provide Owner with at least 10 business days of notice in advance of training.
3. Training shall occur within normal business hours at a mutually agreed on time. Unless otherwise agreed to, training shall occur Monday through Friday, except on U.S. Federal holidays, with two morning sessions and two afternoon sessions. Each morning session and afternoon session shall be split in half with 30 minute break between sessions. Morning and afternoon sessions shall be separated by 60-minute lunch period. Training, including breaks and excluding lunch period, shall not exceed eight hours per day.
4. Provide staggered training schedule as requested by Owner.

D. Training Attendee List and Sign-in Sheet:
1. Request from Owner in advance of training a proposed attendee list with name, phone number and e-mail address.
2. Provide a preprinted sign-in sheet for each training session with proposed attendees listed and no fewer than six blank spaces to add additional attendees.
3. Preprinted sign-in sheet shall include training session number, date and time, instructor name, phone number and e-mail address, and brief description of content to be covered during session. List attendees with columns for name, phone number, e-mail address and a column for attendee signature or initials.
4. Circulate sign-in sheet at beginning of each session and solicit attendees to sign or initial in applicable location.
5. At end of each training day, send Owner an e-mail with an attachment of scanned copy (PDF) of circulated sign-in sheet for each session.

E. Training Attendee Headcount:
1. Plan in advance of training for attendees.
2. Make allowance for Owner to add up to ten attendee(s) at time of training.
3. Headcount may vary depending on training content covered in session. Attendee access may be restricted to some training content for purposes of maintaining system security.

F. Training Attendee Prior Knowledge: For guidance in planning required training and instruction, assume attendees have the following:
1. Technical school education.
2. Basic, Intermediate, and Advanced user knowledge of computers and office applications.
3. Basic, Intermediate, and Advanced knowledge of HVAC systems.
4. Basic, Intermediate, and Advanced knowledge of DDC systems.
5. Basic, Intermediate, and Advanced knowledge of DDC system and products installed.

G. Attendee Training Manuals:
1. Provide each attendee with a color hard copy of all training materials and visual presentations.
2. Hard-copy materials shall be organized in a three-ring binder with table of contents and individual divider tabs marked for each logical grouping of subject matter. Organize material to provide space for attendees to take handwritten notes within training manuals.
3. In addition to hard-copy materials included in training manual, provide each binder with a sleeve or pocket that includes a DVD or flash drive with PDF copy of all hard-copy materials.

H. Instructor Requirements:
1. One or multiple qualified instructors, as required, to provide training.
2. Instructors shall have not less than five years of providing instructional training on not less than five past projects with similar DDC system scope and complexity to DDC system installed.

I. Organization of Training Sessions:
1. Organize training sessions into logical groupings of technical content and to reflect different levels of operators having access to system. Plan training sessions to accommodate the following three levels of operators:
   a. Daily operators.
   b. Advanced operators.
   c. System managers and administrators.
2. Plan and organize training sessions to group training content to protect DDC system security. Some attendees may be restricted to some training sessions that cover restricted content for purposes of maintaining DDC system security.

J. Training Outline:

1. Submit training outline for Owner review at least 10 business day before scheduling training.
2. Outline shall include a detailed agenda for each training day that is broken down into each of four training sessions that day, training objectives for each training session and synopses for each lesson planned.

K. On-Site Training:
1. Owner will provide conditioned classroom or workspace with ample desks or tables, chairs, power and data connectivity for instructor and each attendee.
2. Instructor shall provide training materials, projector and other audiovisual equipment used in training.
3. Provide as much of training located on-site as deemed feasible and practical by Owner.
4. On-site training shall include regular walk-through tours, as required, to observe each unique product type installed with hands-on review of operation, calibration and service requirements.
5. Operator workstation provided with DDC system shall be used in training. If operator workstation is not indicated, provide a temporary workstation to convey training content.

L. Off-Site Training:
1. Provide conditioned training rooms and workspace with ample tables desks or tables, chairs, power and data connectivity for each attendee.
2. Provide capability to remotely access to Project DDC system for use in training.
3. Provide a workstation for use by each attendee.

M. Training Content for Daily Operators:
1. Basic operation of system.
2. Understanding DDC system architecture and configuration.
3. Understanding each unique product type installed including performance and service requirements for each.
4. Understanding operation of each system and equipment controlled by DDC system including sequences of operation, each unique control algorithm and each unique optimization routine.
5. Operating operator workstations, printers and other peripherals.
6. Logging on and off system.
7. Accessing graphics, reports and alarms.
8. Adjusting and changing set points and time schedules.
9. Recognizing DDC system malfunctions.
10. Understanding content of operation and maintenance manuals including control drawings.
11. Understanding physical location and placement of DDC controllers and I/O hardware.
12. Accessing data from DDC controllers.
13. Operating portable operator workstations.
14. Review of DDC testing results to establish basic understanding of DDC system operating performance and HVAC system limitations as of Substantial Completion.
15. Running each specified report and log.
16. Displaying and demonstrating each data entry to show Project-specific customizing capability. Demonstrating parameter changes.
17. Stepping through graphics penetration tree, displaying all graphics, demonstrating dynamic updating, and direct access to graphics.
18. Executing digital and analog commands in graphic mode.
19. Demonstrating control loop precision and stability via trend logs of I/O for not less than 10 percent of I/O installed.
20. Demonstrating DDC system performance through trend logs and command tracing.
21. Demonstrating scan, update, and alarm responsiveness.
22. Demonstrating spreadsheet and curve plot software, and its integration with database.
23. Demonstrating on-line user guide, and help function and mail facility.
24. Demonstrating multitasking by showing dynamic curve plot, and graphic construction operating simultaneously via split screen.
25. Demonstrating the following for HVAC systems and equipment controlled by DDC system:
    a. Operation of HVAC equipment in normal-off, -on and failed conditions while observing individual equipment, dampers and valves for correct position under each condition.

b. For HVAC equipment with factory-installed software, show that integration into DDC system is able to communicate with DDC controllers or gateways, as applicable.

c. Using graphed trends, show that sequence of operation is executed in correct manner, and HVAC systems operate properly through complete sequence of operation including seasonal change, occupied and unoccupied modes, warm-up and cool-down cycles and other modes of operation indicated.

d. Hardware interlocks and safeties function properly and DDC system performs correct sequence of operation after electrical power interruption and resumption after power is restored.

e. Reporting of alarm conditions for each alarm, and confirm that alarms are received at assigned locations, including operator workstations.

f. Each control loop responds to set point adjustment and stabilizes within time period indicated.

g. Sharing of previously graphed trends of all control loops to demonstrate that each control loop is stable and set points are being maintained.

N. Training Content for Advanced Operators:

1. Making and changing workstation graphics.
2. Creating, deleting and modifying alarms including annunciation and routing.
3. Creating, deleting and modifying point trend logs including graphing and printing on an ad-hoc basis and operator-defined time intervals.
4. Creating, deleting and modifying reports.
5. Creating, deleting and modifying points.
6. Creating, deleting and modifying programming including ability to edit control programs off-line.
7. Creating, deleting and modifying system graphics and other types of displays.
8. Adding DDC controllers and other network communication devices such as gateways and routers.
9. Adding operator workstations.
10. Performing DDC system checkout and diagnostic procedures.
11. Performing DDC controllers operation and maintenance procedures.
12. Performing operator workstation operation and maintenance procedures.
13. Configuring DDC system hardware including controllers, workstations, communication devices and I/O points.
14. Maintaining, calibrating, troubleshooting, diagnosing and repairing hardware.
15. Adjusting, calibrating and replacing DDC system components.

O. Training Content for System Managers and Administrators:

1. DDC system software maintenance and backups.
2. Uploading, downloading and off-line archiving of all DDC system software and databases.
3. Interface with Project-specific, third-party operator software.
4. Understanding password and security procedures.
5. Adding new operators and making modifications to existing operators.
6. Operator password assignments and modification.
7. Operator authority assignment and modification.
8. Workstation data segregation and modification.

P. Video of Training Sessions:

1. Provide a digital video and audio recording of each training session. Create a separate recording file for each session.
2. Stamp each recording file with training session number, session name and date.
3. Provide Owner with two copies of digital files on DVDs or flash drives for later reference and for use in future training.
4. Owner retains right to make additional copies for intended training purposes without having to pay royalties.

END OF SECTION 230923

SECTION 231123 - FACILITY NATURAL-GAS PIPING

PART 1 GENERAL

1.1 SUMMARY

A. Section Includes:
1. Pipes, tubes, and fittings.
2. Piping specialties.
3. Joining materials.
4. Manual gas shutoff valves.
5. Motorized gas valves.
6. Earthquake valves.
7. Pressure regulators.
8. Service meters.
9. Dielectric fittings.

1.2 DEFINITIONS

A. CWP: Cold working pressure.
B. Exposed, Exterior Installations: Exposed to view outdoors or subject to outdoor ambient temperatures and weather conditions. An example includes rooftop locations.
C. Exposed, Interior Installations: Exposed to view indoors. Examples include finished occupied spaces and mechanical equipment rooms.
D. Finished Spaces: Spaces other than mechanical and electrical equipment rooms, furred spaces, pipe and duct shafts, unheated spaces immediately below roof, spaces above ceilings, unexcavated spaces, crawlspaces, and tunnels.

1.3 ACTION SUBMITTALS

A. Product Data:
1. Piping specialties.
2. Valves. Include pressure rating, capacity, settings, and electrical connection data of selected models.
3. Pressure regulators. Indicate pressure ratings and capacities.
4. Service meters. Indicate pressure ratings and capacities. Include bypass fittings, meter bars, and supports.
5. Dielectric fittings.
B. Shop Drawings: For facility natural-gas piping layout. Include plans, piping layout and elevations, sections, and details for fabrication of pipe anchors, hangers, supports for multiple pipes, alignment guides, expansion joints and loops, and attachments of the same to building structure. Detail location of anchors, alignment guides, and expansion joints and loops.
1. Shop Drawing Scale: 1/4 inch per foot.
2. Detail mounting, supports, and valve arrangements for service-meter assembly and pressure regulator assembly.

1.4 INFORMATIONAL SUBMITTALS

A. Coordination Drawings: Plans and details, drawn to scale, on which natural-gas piping is shown and coordinated with other installations, using input from installers of the items involved.
B. Welding certificates.
C. Site Survey: Plans, drawn to scale, on which natural-gas piping is shown and coordinated with other services and utilities.
D. Field quality-control reports.
E. Qualification Statements: For professional engineer.

1.5 CLOSEOUT SUBMITTALS

A. Operation and Maintenance Data: For motorized gas valves, pressure regulators, and service meters to include in emergency, operation, and maintenance manuals.

1.6 QUALITY ASSURANCE

A. Steel Support Welding Qualifications: Qualify procedures and personnel in accordance with AWS D1.1/D1.1M, "Structural Welding Code - Steel."
B. Pipe Welding Qualifications: Qualify procedures and operators in accordance with the ASME Boiler and Pressure Vessel Code.

1.7 DELIVERY, STORAGE, AND HANDLING

A. Handling Flammable Liquids: Remove and dispose of liquids from existing natural-gas piping in accordance with requirements of authorities having jurisdiction.
B. Deliver pipes and tubes with factory-applied end caps. Maintain end caps through shipping, storage, and handling to prevent pipe end damage and to prevent entrance of dirt, debris, and moisture.
C. Store and handle pipes and tubes having factory-applied protective coatings to avoid damaging coating, and protect from direct sunlight.
D. Protect stored PE pipes and valves from direct sunlight.

1.8 PROJECT CONDITIONS

A. Perform site survey, research public utility records, and verify existing utility locations. Contact utility-locating service for area where Project is located.
B. Interruption of Existing Natural-Gas Service: Do not interrupt natural-gas service to facilities occupied by Owner or others unless permitted under the following conditions, and then only after arranging to provide purging and startup of natural-gas supply in accordance with requirements indicated:
   1. Notify Owner no fewer than five days in advance of proposed interruption of natural-gas service.
   2. Do not proceed with interruption of natural-gas service without Owner's written permission.

1.9 COORDINATION

A. Coordinate sizes and locations of concrete bases with actual equipment provided.
B. Coordinate requirements for access panels and doors for valves installed and concealed behind finished surfaces. Comply with requirements in Section 083113 "Access Doors and Frames."
C. Coordinate requirements for piping identification for natural-gas piping. Comply with requirements in Section 220553 "Identification of Plumbing Piping and Equipment."

PART 2 PRODUCTS

2.1 SOURCE LIMITATIONS

A. Obtain each product type from single source from single manufacturer.

2.2 PERFORMANCE REQUIREMENTS

A. Comply with NFPA 54, AGA XR0603, and 49 CFR 192.
B. Electrical Components, Devices, and Accessories: Listed and labeled as defined in NFPA 70, by a qualified testing agency, and marked for intended location and application.
C. Seismic Performance: Natural-gas piping system is to withstand the effects of earthquake motions determined in accordance with ASCE/SEI 7. See Section 220548 "Vibration and Seismic Controls for Plumbing Piping and Equipment."
   1. The term "withstand" means "the piping system will remain in place without separation of any parts from the device when subjected to the seismic forces specified."
   2. Component Importance Factor: 1.5.

2.3 PIPES, TUBES, AND FITTINGS

A. Steel Pipe (<75 psi): ASTM A53/A53M, black steel, Schedule 40, Type E or S, Grade B.
   1. Malleable-Iron Threaded Fittings: ASME B16.3, Class 150, standard pattern.
   2. Wrought-Steel Welding Fittings: ASTM A234/A234M for butt welding and socket welding.
   3. Unions: ASME B16.39, Class 150, malleable iron with brass-to-iron seat, ground joint, and threaded ends.
   4. Forged-Steel Flanges and Flanged Fittings: ASME B16.5, minimum Class 150, including bolts, nuts, and gaskets of the following material group, end connections, and facings:
      a. Material Group: 1.1.
      b. End Connections: Threaded or butt welding to match pipe.
      c. Lapped Face: Not permitted underground.
      d. Gasket Materials: ASME B16.20, metallic, flat, asbestos free, aluminum O-rings, and spiral-wound metal gaskets.
      e. Bolts and Nuts: ASME B18.2.1, carbon steel aboveground and stainless steel underground.
   5. Protective Coating for Underground Piping: Factory-applied, three-layer coating of epoxy, adhesive, and PE.
      a. All direct buried steel surfaces shall be coated with 15 mils of a water dilutable cementitious based primer and wrapped in 25 mils continuous poly-extruded material. Coat steel fittings with similar protective covering as specified.
      b. Inspect the coating system for holes, voids, cracks, and other damage during installation.
      c. Inspection of Pipe Coatings
         1) Repair any damage to the protective covering during transit and handling before installation. After field coating and wrapping has been applied, inspect the entire pipe using an electric holiday detector with impressed current set at a value in accordance with NACE SP0274 using a full-ring, spring-type coil electrode. Equip the holiday detector with a bell, buzzer, or other type of audible signal which sounds when a holiday is detected. Immediately repair all holidays in the protective covering upon detection. The Owner reserves the right to inspect and determine the suitability of the detector. Furnish labor, materials, and equipment necessary for conducting the inspection.
   6. Mechanical Couplings:
      a. Steel flanges and tube with epoxy finish.
      b. NBR seals.
      c. Steel bolts, washers, and nuts.
      d. Coupling is to be capable of joining PE pipe to PE pipe, steel pipe to PE pipe, or steel pipe to steel pipe.
      e. Steel body couplings installed underground on plastic pipe are to be factory equipped with anode.

B. Steel Pipe (300+ psi): ASTM A53/A53M, black steel, Schedule 80, Type S, Grade A.
   1. Malleable-Iron Threaded Fittings: ASME B16.3, Class 400, standard pattern.
   2. Wrought-Steel Welding Fittings: ASTM A234/A234M for butt welding and socket welding.
   3. Unions: ASME B16.39, Class 400, malleable iron with brass-to-iron seat, ground joint, and threaded ends.
   4. Forged-Steel Flanges and Flanged Fittings: ASME B16.5, minimum Class 400, including bolts, nuts, and gaskets of the following material group, end connections, and facings:
      a. Material Group: 1.1.
      b. End Connections: Threaded or butt welding to match pipe.
      c. Lapped Face: Not permitted underground.
      d. Gasket Materials: ASME B16.20, metallic, flat, asbestos free, aluminum O-rings, and spiral-wound metal gaskets.
      e. Bolts and Nuts: ASME B18.2.1, carbon steel aboveground and stainless steel underground.
   5. Protective Coating for Underground Piping: Factory-applied, three-layer coating of epoxy, adhesive, and PE.

a. All direct buried steel surfaces shall be coated with 15 mils of a water dilutable cementitious based primer and wrapped in 25 mils continuous poly-extruded material. Coat steel fittings with similar protective covering as specified.

b. Inspect the coating system for holes, voids, cracks, and other damage during installation.

c. Inspection of Pipe Coatings

1) Repair any damage to the protective covering during transit and handling before installation. After field coating and wrapping has been applied, inspect the entire pipe using an electric holiday detector with impressed current set at a value in accordance with NACE SP0274 using a full-ring, spring-type coil electrode. Equip the holiday detector with a bell, buzzer, or other type of audible signal which sounds when a holiday is detected. Immediately repair all holidays in the protective covering upon detection. The Owner reserves the right to inspect and determine the suitability of the detector. Furnish labor, materials, and equipment necessary for conducting the inspection.

6. Mechanical Couplings:

a. Steel flanges and tube with epoxy finish.

b. NBR seals.

c. Steel bolts, washers, and nuts.

d. Coupling is to be capable of joining PE pipe to PE pipe, steel pipe to PE pipe, or steel pipe to steel pipe.

e. Steel body couplings installed underground on plastic pipe are to be factory equipped with anode.

C. PE Pipe: ASTM D2513, SDR 11.

1. PE Fittings: ASTM D2683, socket-fusion type or ASTM D3261, butt-fusion type with dimensions matching PE pipe.

2. PE Transition Fittings: Factory-fabricated fittings with PE pipe complying with ASTM D2513, SDR 11; and steel pipe complying with ASTM A53/A53M, black steel, Schedule 40, Type E or S, Grade B.

3. Anodeless Service-Line Risers: Factory fabricated and leak tested.

a. Underground Portion: PE pipe complying with ASTM D2513, SDR 11 inlet.

b. Casing: Steel pipe complying with ASTM A53/A53M, Schedule 40, black steel, Type E or S, Grade B, with corrosion-protective coating covering.

c. Aboveground Portion: PE transition fitting.

d. Outlet is threaded or flanged or suitable for welded connection.

e. Tracer wire connection.

f. UV shield.

g. Stake supports with factory finish to match steel pipe casing or carrier pipe.

4. Transition Service-Line Risers: Factory fabricated and leak tested.

a. Underground Portion: PE pipe complying with ASTM D2513, SDR 11 inlet connected to steel pipe complying with ASTM A53/A53M, Schedule 40, Type E or S, Grade B, with corrosion-protective coating for aboveground outlet.

b. Outlet is threaded or flanged or suitable for welded connection.

c. Bridging sleeve over mechanical coupling.

d. Factory-connected anode.

e. Tracer wire connection.

f. UV shield.

g. Stake supports with factory finish to match steel pipe casing or carrier pipe.

5. Plastic Mechanical Couplings, NPS 1-1/2 (DN 40) and Smaller: Suitable for joining PE pipe to PE pipe.

a. PE body with molded-in, stainless steel support ring.

b. Seals: NBR.

c. Acetal collets.

d. Electro-zinc-plated steel stiffener.

6. Plastic Mechanical Couplings, NPS 2 (DN 50) and Larger: Suitable for joining PE pipe to PE pipe, steel pipe to PE pipe, or steel pipe to steel pipe.

a. Fiber-reinforced plastic body.
b. PE body tube.
c. Seals: NBR.
d. Acetal collets.
e. Stainless steel bolts, nuts, and washers.

7. Steel Mechanical Couplings: Suitable for joining plain-end PE pipe to PE pipe, steel pipe to PE pipe, or steel pipe to steel pipe.
   a. Steel flanges and tube with epoxy finish.
   b. Seals: NBR.
   c. Steel bolts, washers, and nuts.
   d. Factory-installed anode for steel-body couplings installed underground.

2.4 PIPING SPECIALTIES

A. Y-Pattern Strainers:
   1. Body: ASTM A126, Class B, cast iron with bolted cover and bottom drain connection.
   2. End Connections: Threaded ends for NPS 2and smaller; flanged ends for NPS 2-1/2and larger.
   3. Strainer Screen: 40-mesh startup strainer, and perforated stainless steel basket with 50 percent free area.
   4. CWP Rating: 125 psig.

B. Weatherproof Vent Cap:
   1. Cast- or malleable-iron increaser fitting with corrosion-resistant wire screen, with free area at least equal to cross-sectional area of connecting pipe and threaded-end connection.

2.5 JOINING MATERIALS

A. Joint Compound and Tape: Suitable for natural gas.

B. Welding Filler Metals: Comply with AWS D10.12/D10.12M for welding materials appropriate for wall thickness and chemical analysis of steel pipe being welded.

2.6 MANUAL GAS SHUTOFF VALVES

A. General Requirements for Metallic Valves, NPS 2 and Smaller: Comply with ASME B16.33.
   1. CWP Rating: Based on usage pressure, but in any case, no lower than 125 psi.
   2. Threaded Ends: Comply with ASME B1.20.1.
   3. Dryseal Threads on Flare Ends: Comply with ASME B1.20.3.
   4. Tamperproof Feature: Locking feature for valves indicated in "Underground, Manual Gas Shutoff Valve Schedule" and "Aboveground, Manual Gas Shutoff Valve Schedule" articles.
   5. Listed and labeled by an NRTL acceptable to authorities having jurisdiction for valves 1 inchand smaller.
   6. Service Mark: Valves NPS 1-1/4 to NPS 2having initials "WOG" permanently marked on valve body.

B. General Requirements for Metallic Valves, NPS 2-1/2 and Larger: Comply with ASME B16.38.
   1. CWP Rating: Based on usage pressure, but in any case, no lower than 125 psi.
   2. Flanged Ends: Comply with ASME B16.5 for steel flanges.
   3. Tamperproof Feature: Locking feature for valves indicated in "Underground, Manual Gas Shutoff Valve Schedule" and "Aboveground, Manual Gas Shutoff Valve Schedule" articles.
   4. Service Mark: Initials "WOG" permanently marked on valve body.

C. Cast-Iron, Full Port Nonlubricated Plug Valves: MSS SP-78.
   1. Body: Cast iron, complying with ASTM A126, Class B.
   2. Plug: Bronze or nickel-plated cast iron.
   3. Seat: Coated with thermoplastic.
   4. Stem Seal: Compatible with natural gas.
   5. Ends: Threaded or flanged as indicated in "Underground, Manual Gas Shutoff Valve Schedule" and "Aboveground, Manual Gas Shutoff Valve Schedule" articles.
   6. Operator: Square head or lug type with tamperproof feature where indicated.

7. Pressure Class: Based on usage pressure, but in any case, no lower than 125 psi.
8. Listing: Valves NPS 1 and smaller are to be listed and labeled by an NRTL acceptable to authorities having jurisdiction.
9. Service: Suitable for natural-gas service with "WOG" indicated on valve body.

D. Cast-Iron, Full Port Lubricated Plug Valves: MSS SP-78.
1. Body: Cast iron, complying with ASTM A126, Class B.
2. Plug: Bronze or nickel-plated cast iron.
3. Seat: Coated with thermoplastic.
4. Stem Seal: Compatible with natural gas.
5. Ends: Threaded or flanged as indicated in "Underground, Manual Gas Shutoff Valve Schedule" and "Aboveground, Manual Gas Shutoff Valve Schedule" articles.
6. Operator: Square head or lug type with tamperproof feature where indicated.
7. Pressure Class: Based on usage pressure, but in any case, no lower than 125 psi.
8. Listing: Valves NPS 1and smaller are to be listed and labeled by an NRTL acceptable to authorities having jurisdiction.
9. Service: Suitable for natural-gas service with "WOG" indicated on valve body.

E. PE Ball Valves: Comply with ASME B16.40.
1. Body: PE.
2. Ball: PE.
3. Stem: Acetal.
4. Seats and Seals: Nitrile.
5. Ends: Plain or fusible to match piping.
6. CWP Rating: 100 psig.
7. Operating Temperature: Minus 20 to plus 140 deg F.
8. Operator: Nut or flat head for key operation.
9. Include plastic valve extension.
10. Include tamperproof locking feature for valves where indicated on Drawings.

F. Valve Boxes:
1. Cast-iron, two-section box.
2. Top section with cover with "GAS" lettering.
3. Bottom section with base to fit over valve and barrel a minimum of 5 inches in diameter.
4. Adjustable cast-iron extensions of length required for depth of bury.
5. Include tee-handle, steel operating wrench with socket end fitting valve nut or flat head, and with stem of length required to operate valve.

2.7 MOTORIZED GAS VALVES

A. Automatic Gas Valves: Comply with ANSI Z21.21.
1. Body: Brass or aluminum.
2. Seats and Disc: NBR.
3. Springs and Valve Trim: Stainless steel.
4. Normally closed.
5. Visual position indicator.
6. Actuator operated by appliance automatic shutoff device.

B. Electrically Operated Valves: Comply with UL 429.
1. Pilot operated.
2. Body: Brass or aluminum.
3. Seats and Disc: NBR.
4. Springs and Valve Trim: Stainless steel.
5. 120 V ac, 60 Hz, Class B, continuous-duty molded coil, and replaceable.
6. NEMA ICS 6, Type 4, coil enclosure.
7. Normally closed.
8. Visual position indicator.

2.8 EARTHQUAKE VALVES

A. Earthquake Valves, Maximum Operating Pressure of 60 psig: Comply with ASCE/SEI 25.
   1. Listed and labeled by an NRTL acceptable to authorities having jurisdiction.
   2. Maximum Operating Pressure: 60 psig.
   3. Cast-aluminum body with stainless steel internal parts.
   4. NBR, reset-stem O-ring seal.
   5. Valve position, open or closed, indicator.
   6. Composition valve seat with clapper held by spring or magnet locking mechanism.
   7. Level indicator.
   8. End Connections: Threaded for valves NPS 2and smaller; flanged for valves NPS 2-1/2and larger.

2.9 PRESSURE REGULATORS

A. General Requirements:
   1. Single stage and suitable for natural gas.
   2. Steel jacket and corrosion-resistant components.
   3. Elevation compensator.
   4. End Connections: Threaded for regulators NPS 2and smaller; flanged for regulators NPS 2-1/2and larger.

B. Service Pressure Regulators: Comply with ANSI Z21.80A.
   1. Body and Diaphragm Case: Cast iron or die-cast aluminum.
   2. Springs: Zinc-plated steel; interchangeable.
   3. Diaphragm Plate: Zinc-plated steel.
   4. Seat Disc: NBR; resistant to gas impurities, abrasion, and deformation at the valve port.
   5. Orifice: Aluminum; interchangeable.
   6. Seal Plug: UV-stabilized, mineral-filled nylon.
   7. Single-port, self-contained regulator with orifice no larger than required at maximum pressure inlet, and no pressure sensing piping external to regulator.
   8. Pressure regulator is to maintain discharge pressure setting downstream and is to not exceed 150 percent of design discharge pressure at shutoff.
   9. Overpressure Protection Device: Factory mounted on pressure regulator.
   10. Atmospheric Vent: Factory- or field-installed, stainless steel screen in opening if not connected to vent piping.

C. Line Pressure Regulators: Comply with ANSI Z21.80A.
   1. Body and Diaphragm Case: Cast iron or die-cast aluminum.
   2. Springs: Zinc-plated steel; interchangeable.
   3. Diaphragm Plate: Zinc-plated steel.
   4. Seat Disc: NBR; resistant to gas impurities, abrasion, and deformation at the valve port.
   5. Orifice: Aluminum; interchangeable.
   6. Seal Plug: UV-stabilized, mineral-filled nylon.
   7. Single-port, self-contained regulator with orifice no larger than required at maximum pressure inlet, and no pressure sensing piping external to regulator.
   8. Pressure regulator is to maintain discharge pressure setting downstream and is to not exceed 150 percent of design discharge pressure at shutoff.
   9. Overpressure Protection Device: Factory mounted on pressure regulator.
   10. Atmospheric Vent: Factory- or field-installed, stainless steel screen in opening if not connected to vent piping.

D. Appliance Pressure Regulators: Comply with ANSI Z21.18.
   1. Body and Diaphragm Case: Die-cast aluminum.
   2. Springs: Zinc-plated steel; interchangeable.
   3. Diaphragm Plate: Zinc-plated steel.
   4. Seat Disc: NBR.
   5. Seal Plug: UV-stabilized, mineral-filled nylon.

6. Factory-Applied Finish: Minimum three-layer polyester and polyurethane paint finish.
7. Regulator may include vent limiting device, instead of vent connection, if approved by authorities having jurisdiction.

2.10 SERVICE METERS

A. Rotary-Type Service Meters: Comply with ANSI B109.3.
1. Case: Extruded aluminum.
2. Connection: Flange.
3. Impellers: Polished aluminum.
4. Rotor Bearings: Self-lubricating.
5. Compensation: Continuous temperature and pressure.
6. Meter Index: Cubic feet.
7. Tamper resistant.
8. Remote meter reader compatible.
9. Accuracy: Maximum plus or minus 2.0 percent.
10. Meter to be provided and sized for natural gas design pressure.
11. Provide gas meters capable of interfacing (output signal equivalent to flow rate) with a BACnet DDC system and Utility Monitoring and Control System (UMCS) for data gathering in units of volumetric flow rate (SCFH). Provide meters that do not require power to function and deliver data without output signal either a voltage or amperage signal which can be converted to a flow rate specification.

B. Turbine Meters: Comply with ASME MFC-4M.
1. Housing: Cast iron or welded steel.
2. Connection Threads or Flanges: Steel.
3. Turbine: Aluminum or plastic.
4. Turbine Bearings: Self-lubricating.
5. Compensation: Continuous temperature and pressure.
6. Meter Index: Cubic feet.
7. Tamper resistant.
8. Remote meter reader compatible.
9. Accuracy: Maximum plus or minus 2.0 percent.
10. Meter to be provided and sized for natural gas design pressure.
11. Provide gas meters capable of interfacing (output signal equivalent to flow rate) with a BACnet DDC system and Utility Monitoring and Control System (UMCS) for data gathering in units of volumetric flow rate (SCFH). Provide meters that do not require power to function and deliver data without output signal either a voltage or amperage signal which can be converted to a flow rate specification.

C. Service-Meter Bars:
1. Malleable- or cast-iron frame for supporting service meter.
2. Include offset swivel pipes, meter nuts with O-ring seal, and factory- or field-installed dielectric unions.
3. Omit meter offset swivel pipes if service-meter bar dimensions match service-meter connections.

D. Service-Meter Bypass Fittings:
1. Ferrous, tee, pipe fitting with capped side inlet for temporary natural-gas supply.
2. Integral ball-check bypass valve.

2.11 DIELECTRIC FITTINGS

A. General Requirements: Assembly of copper alloy and ferrous materials with separating nonconductive insulating material. Include end connections compatible with pipes to be joined.

B. Dielectric Unions:
1. Description:
a. Standard: ASSE 1079.
b. Pressure Rating: Based on usage pressure, but in any case, no lower than 125 psi.

c. End Connections: Solder-joint copper alloy and threaded ferrous.

C. Dielectric Flanges:

1. Description:

a. Standard: ASSE 1079.

b. Factory-fabricated, bolted, companion-flange assembly.

c. Pressure Rating: Pressure Rating: Based on usage pressure, but in any case, no lower than 125 psi.

d. End Connections: Solder-joint copper alloy and threaded ferrous; threaded solder-joint copper alloy and threaded ferrous.

D. Dielectric-Flange Insulating Kits:

1. Description:

a. Nonconducting materials for field assembly of companion flanges.

b. Pressure Rating: Pressure Rating: Based on usage pressure, but in any case, no lower than 150 psi.

c. Gasket: Neoprene or phenolic.

d. Bolt Sleeves: Phenolic or polyethylene.

e. Washers: Phenolic with steel backing washers.

2.12 LABELING AND IDENTIFYING

A. Detectable Warning Tape: Acid- and alkali-resistant, PE film warning tape manufactured for marking and identifying underground utilities, a minimum of 6 inches wide and 4 milsthick, continuously inscribed with a description and rated pressure of utility, with metallic core encased in a protective jacket for corrosion protection, detectable by metal detector when tape is buried up to 30 inches deep; colored yellow.

B. Label and identify gas piping and pressure outside a multitenant building by tenant.

PART 3 EXECUTION

3.1 EXAMINATION

A. Examine roughing-in for natural-gas piping system to verify actual locations of piping connections before equipment installation.

B. Proceed with installation only after unsatisfactory conditions have been corrected.

3.2 PREPARATION

A. Close equipment shutoff valves before turning off natural gas to premises or piping section.

B. Inspect natural-gas piping in accordance with NFPA 54, AGA XR0603, and 49 CFR 192 to determine that natural-gas utilization devices are turned off in piping section affected.

C. Comply with NFPA 54, AGA XR0603, and 49 CFR 192 requirements for preventing accidental ignition.

3.3 INSTALLATION OF OUTDOOR PIPING

A. Comply with NFPA 54, AGA XR0603, and 49 CFR 192 for installation and purging of natural-gas piping.

B. Install underground, natural-gas piping buried at least 36 inchesbelow finished grade. Comply with requirements in Section 312000 "Earth Moving" for excavating, trenching, and backfilling.

1. If natural-gas piping is installed less than 36 inchesbelow finished grade, install it in containment conduit.

C. Install underground, PE, natural-gas piping in accordance with ASTM D2774.

D. Steel Piping with Protective Coating:

1. Apply joint cover kits to pipe after joining to cover, seal, and protect joints.

2. Repair damage to PE coating on pipe as recommended in writing by protective coating manufacturer.

3. Replace pipe having damaged PE coating with new pipe.

E. Install fittings for changes in direction and branch connections.

F. Install pressure gauge upstream and downstream from each service regulator. Pressure gauges are specified in Section 230500 "Common Work Results for HVAC."

3.4 INSTALLATION OF INDOOR PIPING

A. Comply with NFPA 54 for installation and purging of natural-gas piping.
B. Drawing plans, schematics, and diagrams indicate general location and arrangement of piping systems. Indicated locations and arrangements are used to size pipe and calculate friction loss, expansion, and other design considerations. Install piping as indicated unless deviations to layout are approved on Coordination Drawings.
C. Arrange for pipe spaces, chases, slots, sleeves, and openings in building structure during progress of construction, to allow for mechanical installations.
D. Do not install piping in concealed locations unless sleeved with the sleeve open at both ends.
E. Install piping indicated to be exposed and piping in equipment rooms and service areas at right angles or parallel to building walls. Diagonal runs are prohibited unless specifically indicated otherwise.
F. Where installing piping above accessible ceilings, allow sufficient space for ceiling panel removal.
G. Locate valves for easy access. Do not locate valves within return air plenums.
H. Install natural-gas piping at uniform grade of 2 percent down toward drip and sediment traps.
I. Install piping free of sags and bends.
J. Install fittings for changes in direction and branch connections.
K. Verify final equipment locations for roughing-in.
L. Comply with requirements in Sections specifying gas-fired appliances and equipment for roughing-in requirements.
M. Drips and Sediment Traps: Install drips at points where condensate may collect, including service-meter outlets. Locate where accessible to permit cleaning and emptying. Do not install where condensate is subject to freezing.
    1. Construct drips and sediment traps using tee fitting with bottom outlet plugged or capped. Use nipple a minimum length of 3 pipe diameters, but not less than 3 incheslong and same size as connected pipe. Install with space below bottom of drip to remove plug or cap.
    2. Install sediment trap on both sides of regulators for gas reduction to 2 psigwith valve and cap.
N. Extend relief vent connections for service regulators, line regulators, and overpressure protection devices to outdoors and terminate with weatherproof vent cap.
O. Conceal pipe installations in walls, pipe spaces, utility spaces, above ceilings, below grade or floors, and in floor channels unless indicated to be exposed to view.
P. Concealed Location Installations: Except as specified below, install concealed natural-gas piping and piping installed under the building in containment conduit constructed of steel pipe with welded joints as described in Part 2. Install a vent pipe from containment conduit to outdoors and terminate with weatherproof vent cap.
    1. Above Accessible Ceilings: Natural-gas piping, fittings, valves, and regulators may be installed in accessible spaces without containment conduit.
    2. In Floors: Install natural-gas piping with welded or brazed joints and protective coating in cast-in-place concrete floors. Cover piping to be cast in concrete slabs with minimum of 1-1/2 inchesof concrete. Piping may not be in physical contact with other metallic structures such as reinforcing rods or electrically neutral conductors. Do not embed piping in concrete slabs containing quick-set additives or cinder aggregate.
    3. In Floor Channels: Install natural-gas piping in floor channels. Channels must have cover and be open to space above cover for ventilation.
    4. In Walls or Partitions: Protect tubing installed inside partitions or hollow walls from physical damage using steel striker barriers at rigid supports.
        a. Exception: Tubing passing through partitions or walls does not require striker barriers.
    5. Prohibited Locations:
        a. Do not install natural-gas piping in or through circulating air ducts, clothes or trash chutes, chimneys or gas vents (flues), ventilating ducts, or dumbwaiter or elevator shafts.
        b. Do not install natural-gas piping in solid walls or partitions.
Q. Use eccentric reducer fittings to make reductions in pipe sizes. Install fittings with level side down.
R. Connect branch piping from top or side of horizontal piping.

S. Install unions in pipes NPS 2and smaller, adjacent to each valve, at final connection to each piece of equipment. Unions are not required at flanged connections.

T. Do not use natural-gas piping as grounding electrode.

U. Install strainer on inlet of each line-pressure regulator and automatic or electrically operated valve.

V. Install pressure gauge upstream and downstream from each line regulator. Pressure gauges are specified in Section 230500 "Common Work Results for HVAC."

W. Install sleeves for piping penetrations of walls, ceilings, and floors. Comply with requirements for sleeves specified in Section 230500 "Common Work Results for HVAC."

X. Install sleeve seals for piping penetrations of concrete walls and slabs. Comply with requirements for sleeve seals specified in Section 230500 "Common Work Results for HVAC."

Y. Install escutcheons for piping penetrations of walls, ceilings, and floors. Comply with requirements for escutcheons specified in Section 230500 "Common Work Results for HVAC."

3.5 INSTALLATION OF SERVICE-METER ASSEMBLIES

A. Install service-meter assemblies aboveground, on concrete bases, as required.

B. Install metal shutoff valves upstream from service regulators. Shutoff valves are not required at second regulators if two regulators are installed in series.

C. Install strainer on inlet of service-pressure regulator and meter set.

D. Install service regulators mounted outside with vent outlet horizontal or facing down. Install screen in vent outlet if not integral with service regulator.

E. Install metal shutoff valves upstream from service meters. Install dielectric fittings downstream from service meters.

F. Install service meters downstream from pressure regulators.

G. Install metal bollards to protect meter assemblies. Comply with requirements in Section 055000 "Metal Fabrications" for pipe bollards.

3.6 INSTALLATION OF VALVES

A. Install manual gas shutoff valve for each gas appliance ahead of corrugated stainless steel tubing, aluminum, or copper connector.

B. Install underground valves with valve boxes.

C. Install regulators and overpressure protection devices with maintenance access space adequate for servicing and testing.

D. Install earthquake valves aboveground outside buildings according to listing.

E. Install anode for metallic valves in underground PE piping.

F. Do not install valves in return-air plenums.

3.7 PIPING JOINT CONSTRUCTION

A. Ream ends of pipes and tubes and remove burrs.

B. Remove scale, slag, dirt, and debris from inside and outside of pipe and fittings before assembly.

C. Threaded Joints:

1. Thread pipe with tapered pipe threads complying with ASME B1.20.1.
2. Cut threads full and clean using sharp dies.
3. Ream threaded pipe ends to remove burrs and restore full inside diameter of pipe.
4. Apply appropriate tape or thread compound to external pipe threads unless dryseal threading is specified.
5. Damaged Threads: Do not use pipe or pipe fittings with threads that are corroded or damaged. Do not use pipe sections that have cracked or open welds.

D. Welded Joints:

1. Construct joints in accordance with AWS D10.12/D10.12M, using qualified processes and welding operators.
2. Bevel plain ends of steel pipe.
3. Patch factory-applied protective coating as recommended by manufacturer at field welds and where damage to coating occurs during construction.

E. Brazed Joints: Construct joints in accordance with AWS's "Brazing Handbook," "Pipe and Tube" Chapter.

F. Flanged Joints: Install gasket material, size, type, and thickness appropriate for natural-gas service. Install gasket concentrically positioned.

G. Flared Joints: Cut tubing with roll cutting tool. Flare tube end with tool to result in flare dimensions complying with SAE J513. Tighten finger tight, and then use wrench. Do not overtighten.

H. PE Piping Heat-Fusion Joints: Clean and dry joining surfaces by wiping with clean cloth or paper towels. Join in accordance with ASTM D2657.

1. Plain-End Pipe and Fittings: Use butt fusion.
2. Plain-End Pipe and Socket Fittings: Use socket fusion.

3.8 INSTALLATION OF HANGERS AND SUPPORTS

A. Comply with requirements for seismic-restraint devices specified in Section 230548 "Vibration and Seismic Controls for HVAC."

B. Comply with requirements in Section 230529 "Hangers and Supports for HVAC Piping and Equipment" for hangers, supports, and anchor devices.

C. Install hangers for steel piping, with maximum horizontal spacing and minimum rod diameters, to comply with MSS SP-58, locally enforced codes, and authorities having jurisdiction requirements, whichever are most stringent.

D. Install hangers for corrugated stainless steel tubing, with maximum horizontal spacing and minimum rod diameters, to comply with manufacturer's written instructions, locally enforced codes, and authorities having jurisdiction requirements, whichever are most stringent.

E. Support horizontal piping within 12 inchesof each fitting.

F. Support vertical runs of steel piping to comply with MSS SP-58, locally enforced codes, and authorities having jurisdiction requirements, whichever are most stringent.

G. Support vertical runs of corrugated stainless steel tubing to comply with manufacturer's written instructions, locally enforced codes, and authorities having jurisdiction requirements, whichever are most stringent.

3.9 PIPING CONNECTIONS

A. Connect to utility's gas main according to utility's procedures and requirements.

B. Install natural-gas piping electrically continuous and bonded to gas-appliance equipment grounding conductor of the circuit powering the appliance in accordance with NFPA 70.

C. Where installing piping adjacent to appliances, allow space for service and maintenance of appliances.

D. Connect piping to appliances using manual gas shutoff valves and unions. Install valve within 72 inchesof each gas-fired appliance and equipment. Install union between valve and appliances or equipment.

3.10 LABELING AND IDENTIFICATION

A. Comply with requirements in Section 230553 "Identification for HVAC Piping and Equipment" for piping and valve identification.

B. Install detectable warning tape directly above gas piping, 12 inches below finished grade, except 6 inchesbelow subgrade under pavements and slabs.

3.11 CONCRETE BASES

A. Concrete Bases: Anchor equipment to concrete base, as required.

1. Construct concrete bases of dimensions indicated, but not less than 4 incheslarger in both directions than supported unit.
2. Install dowel rods to connect concrete base to concrete floor. Unless otherwise indicated, install dowel rods on 18-inchcenters around the full perimeter of the base.
3. Install epoxy-coated anchor bolts for supported equipment that extend through concrete base, and anchor into structural concrete floor.
4. Place and secure anchorage devices. Use supported equipment manufacturer's setting drawings, templates, diagrams, instructions, and directions furnished with items to be embedded.
5. Install anchor bolts to elevations required for proper attachment to supported equipment.
6. Use 3000 psig, 28-day, compressive-strength concrete and reinforcement as specified in Section 033000 "Cast-in-Place Concrete."

3.12 FIELD QUALITY CONTROL

A. Tests and Inspections:
   1. Test, inspect, and purge natural gas in accordance with NFPA 54, AGA XR0603, 49 CFR 192, and authorities having jurisdiction.
   2. Natural-gas piping will be considered defective if it does not pass tests and inspections.
B. Prepare test and inspection reports.

3.13 DEMONSTRATION

A. Engage a factory-authorized service representative to train Owner's maintenance personnel to adjust, operate, and maintain earthquake valves.

3.14 OUTDOOR PIPING SCHEDULE

A. Underground natural-gas piping is to be the following:
   1. Natural Gas (<75 psi): PE pipe and fittings joined by heat fusion, or mechanical couplings; service-line risers with tracer wire terminated in an accessible location.
   2. Natural Gas (300+ psi): Schedule 80 steel pipe with wrought-steel fittings and welded joints, or mechanical couplings. Coat pipe and fittings with protective coating for steel piping.
   3. Containment Conduit: Steel pipe with wrought-steel fittings and welded joints. Coat pipe and fittings with protective coating for steel piping.
B. Aboveground natural-gas piping is to be the following:
   1. Natural Gas (300+ psi):
      a. Schedule 80 steel pipe with malleable-iron fittings and threaded joints.
      b. Schedule 80 steel pipe with wrought-steel fittings and welded joints.
   2. Natural Gas (<75 psi):
      a. Schedule 40 steel pipe with malleable-iron fittings and threaded joints.
      b. Schedule 40 steel pipe with wrought-steel fittings and welded joints.

END OF SECTION 231123

SECTION 232113 - HYDRONIC PIPING

PART 1 GENERAL

1.1 SUMMARY

A. This Section includes pipe and fitting materials, joining methods, special-duty valves, and specialties for the following:
   1. Hot-water heating piping.
   2. Chilled-water piping.
   3. Makeup-water piping.
   4. Condensate-drain piping.
   5. Air-vent piping.
   6. Safety-valve-inlet and -outlet piping.

B. Related Sections include the following:
   1. Division 23 Section "Hydronic Pumps" for pumps, motors, and accessories for hydronic piping.

1.2 DEFINITIONS

A. PTFE: Polytetrafluoroethylene.
B. RTRF: Reinforced thermosetting resin (fiberglass) fittings.
C. RTRP: Reinforced thermosetting resin (fiberglass) pipe.

1.3 PERFORMANCE REQUIREMENTS

A. Hydronic piping components and installation shall be capable of withstanding the following minimum working pressure and temperature:
   1. Hot-Water Heating Piping: 125 psig at 200 deg F .
   2. Chilled-Water Piping: 125 psig at 200 deg F .
   3. Makeup-Water Piping: 80 psig at 150 deg F .
   4. Condensate-Drain Piping: 150 deg F .
   5. Air-Vent Piping: 200 deg F .
   6. Safety-Valve-Inlet and -Outlet Piping: Equal to the pressure of the piping system to which it is attached.

1.4 ACTION SUBMITTALS

A. Product Data: For each type of the following:
   1. Valves. Include flow and pressure drop curves based on manufacturer's testing for calibrated-orifice balancing valves and automatic flow-control valves.
   2. Air control devices.
   3. Chemical treatment.
   4. Hydronic specialties.

1.5 INFORMATIONAL SUBMITTALS

A. Qualification Data: For Installer.
B. Welding certificates.
C. Field quality-control test reports.
D. Water Analysis: Submit a copy of the water analysis to illustrate water quality available at Project site.

1.6 CLOSEOUT SUBMITTALS

A. Operation and Maintenance Data: For air control devices, hydronic specialties, and special-duty valves to include in emergency, operation, and maintenance manuals.

1.7 MAINTENANCE MATERIAL SUBMITTALS

A. Water-Treatment Chemicals: Furnish enough chemicals for initial system startup and for preventive maintenance for one year from date of Substantial Completion.

B. Differential Pressure Meter: For each type of balancing valve and automatic flow control valve, include flowmeter, probes, hoses, flow charts, and carrying case.

1.8 QUALITY ASSURANCE

A. Installer Qualifications:

1. Installers of Pressure-Sealed Joints: Installers shall be certified by the pressure-seal joint manufacturer as having been trained and qualified to join piping with pressure-seal pipe couplings and fittings.

B. Steel Support Welding: Qualify processes and operators according to AWS D1.1/D1.1M, "Structural Welding Code - Steel."

C. Welding: Qualify processes and operators according to ASME Boiler and Pressure Vessel Code: Section IX.

1. Comply with provisions in ASME B31 Series, "Code for Pressure Piping."

2. Certify that each welder has passed AWS qualification tests for welding processes involved and that certification is current.

D. ASME Compliance: Comply with ASME B31.9, "Building Services Piping," for materials, products, and installation. Safety valves and pressure vessels shall bear the appropriate ASME label. Fabricate and stamp air separators and expansion tanks to comply with ASME Boiler and Pressure Vessel Code: Section VIII, Division 01.

PART 2 PRODUCTS

2.1 COPPER TUBE AND FITTINGS

A. Drawn-Temper Copper Tubing: ASTM B 88, Type L .

B. Annealed-Temper Copper Tubing: ASTM B 88, Type K.

C. Wrought-Copper Fittings: ASME B16.22.

1. Basis-of-Design Product: Subject to compliance with requirements, provide the product indicated on Drawings or a comparable product by one of the following:

a. S. P. Fittings; a division of Star Pipe Products.

b. Victaulic Company.

D. Wrought-Copper Unions: ASME B16.22.

2.2 STEEL PIPE AND FITTINGS

A. Steel Pipe: ASTM A 53/A 53M, black steel with plain ends; type, grade, and wall thickness as indicated in Part 3 "Piping Applications" Article.

B. Cast-Iron Threaded Fittings: ASME B16.4; Classes 125 and 250 as indicated in Part 3 "Piping Applications" Article.

C. Malleable-Iron Threaded Fittings: ASME B16.3, Classes 150 and 300 as indicated in Part 3 "Piping Applications" Article.

D. Malleable-Iron Unions: ASME B16.39; Classes 150, 250, and 300 as indicated in Part 3 "Piping Applications" Article.

E. Cast-Iron Pipe Flanges and Flanged Fittings: ASME B16.1, Classes 25, 125, and 250; raised ground face, and bolt holes spot faced as indicated in Part 3 "Piping Applications" Article.

F. Wrought-Steel Fittings: ASTM A 234/A 234M, wall thickness to match adjoining pipe.

G. Wrought Cast- and Forged-Steel Flanges and Flanged Fittings: ASME B16.5, including bolts, nuts, and gaskets of the following material group, end connections, and facings:

1. Material Group: 1.1.

2. End Connections: Butt welding.

3. Facings: Raised face.

H. Grooved Mechanical-Joint Fittings and Couplings:
    a. Basis-of-Design Product: Subject to compliance with requirements, provide the product indicated on Drawings by Victaulic Company.
  2. Joint Fittings: ASTM A 536, Grade 65-45-12 ductile iron; ASTM A 47/A 47M, Grade 32510 malleable iron; ASTM A 53/A 53M, Type F, E, or S, Grade B fabricated steel; or ASTM A 106, Grade B steel fittings with grooves or shoulders constructed to accept grooved-end couplings; with nuts, bolts, locking pin, locking toggle, or lugs to secure grooved pipe and fittings.
  3. Couplings: Ductile- or malleable-iron housing and synthetic rubber gasket of central cavity pressure-responsive design; with nuts, bolts, locking pin, locking toggle, or lugs to secure grooved pipe and fittings.

I. Steel Pressure-Seal Fittings:
    a. Basis-of-Design Product: Subject to compliance with requirements, provide the product indicated on Drawings by Victaulic Company. or
  2. Housing: Steel.
  3. O-Rings and Pipe Stop: EPDM.
  4. Tools: Manufacturer's special tool.
  5. Minimum 300-psig working-pressure rating at 230 deg F.

J. Steel Pipe Nipples: ASTM A 733, made of same materials and wall thicknesses as pipe in which they are installed.

2.3 JOINING MATERIALS

A. Pipe-Flange Gasket Materials: Suitable for chemical and thermal conditions of piping system contents.
  1. ASME B16.21, nonmetallic, flat, asbestos free, 1/8-inch maximum thickness unless thickness or specific material is indicated.
    a. Full-Face Type: For flat-face, Class 125, cast-iron and cast-bronze flanges.
    b. Narrow-Face Type: For raised-face, Class 250, cast-iron and steel flanges.

B. Flange Bolts and Nuts: ASME B18.2.1, carbon steel, unless otherwise indicated.

C. Plastic, Pipe-Flange Gasket, Bolts, and Nuts: Type and material recommended by piping system manufacturer, unless otherwise indicated.

D. Solder Filler Metals: ASTM B 32, lead-free alloys. Include water-flushable flux according to ASTM B 813.

E. Brazing Filler Metals: AWS A5.8, BCuP Series, copper-phosphorus alloys for joining copper with copper; or BAg-1, silver alloy for joining copper with bronze or steel.

F. Welding Filler Metals: Comply with AWS D10.12/D10.12M for welding materials appropriate for wall thickness and chemical analysis of steel pipe being welded.

G. Gasket Material: Thickness, material, and type suitable for fluid to be handled and working temperatures and pressures.

2.4 TRANSITION FITTINGS

2.5 DIELECTRIC FITTINGS

A. General Requirements: Assembly of copper alloy and ferrous materials with separating nonconductive insulating material. Include end connections compatible with pipes to be joined.

B. Dielectric Unions:
  1. Manufacturers: Subject to compliance with requirements, provide products by one of the following :
    a. Capitol Manufacturing Company.
    b. Hart Industries International, Inc
    c. McDonald, A. Y. Mfg. Co.
    d. Watts Regulator Co.; a division of Watts Water Technologies, Inc.
    e. Wilkins; a Zurn company.
  2. Description:
    a. Standard: ASSE 1079.
    b. Pressure Rating: 125 psig minimum at 180 deg F
    c. End Connections: Solder-joint copper alloy and threaded ferrous.

C. Dielectric Flanges:

1. Manufacturers: Subject to compliance with requirements, provide products by one of the following :
    a. Capitol Manufacturing Company.
    b. Watts Regulator Co.; a division of Watts Water Technologies, Inc.
    c. Wilkins; a Zurn company.
2. Description:
    a. Standard: ASSE 1079.
    b. Factory-fabricated, bolted, companion-flange assembly.
    c. Pressure Rating: 125 psig minimum at 180 deg F
    d. End Connections: Solder-joint copper alloy and threaded ferrous; threaded solder-joint copper alloy and threaded ferrous.

D. Dielectric-Flange Insulating Kits:
1. Manufacturers: Subject to compliance with requirements, provide products by one of the following :
    a. Advance Products & Systems, Inc.
    b. Calpico, Inc.
    c. Pipeline Seal and Insulator, Inc.
2. Description:
    a. Nonconducting materials for field assembly of companion flanges.
    b. Pressure Rating: 150 psig .
    c. Gasket: Neoprene or phenolic.
    d. Bolt Sleeves: Phenolic or polyethylene.
    e. Washers: Phenolic with steel backing washers.

E. Dielectric Nipples:
1. Manufacturers: Subject to compliance with requirements, provide products by one of the following :
    a. Elster Perfection.
    b. Grinnell Mechanical Products.
    c. Precision Plumbing Products, Inc.
    d. Victaulic Company.
2. Description:
    a. Standard: IAPMO PS 66
    b. Electroplated steel nipple. complying with ASTM F 1545.
    c. Pressure Rating: 300 psig at 225 deg F .
    d. End Connections: Male threaded or grooved.
    e. Lining: Inert and noncorrosive, propylene.

2.6 VALVES

A. Gate, Globe, Check, Ball, and Butterfly Valves: Comply with requirements specified in Division 23 Section "General-Duty Valves for HVAC Piping."

B. Automatic Temperature-Control Valves, Actuators, and Sensors: Comply with requirements specified in Division 23 Section "Instrumentation and Control for HVAC."

C. Bronze, Calibrated-Orifice, Balancing Valves:
1. Available Manufacturers: Subject to compliance with requirements, manufacturers offering products that may be incorporated into the Work include, but are not limited to, the following:
2. Manufacturers: Subject to compliance with requirements, provide products by one of the following:
3. Basis-of-Design Product: Subject to compliance with requirements, provide the product indicated on Drawings or a product by one of the following:
    a. Armstrong Pumps, Inc.
    b. Bell & Gossett Domestic Pump; a division of ITT Industries.
    c. Flow Design Inc.
    d. Gerand Engineering Co.
    e. Griswold Controls.
    f. Taco.
4. Body: Bronze, ball or plug type with calibrated orifice or venturi.
5. Ball: Brass or stainless steel.

6. Plug: Resin.
7. Seat: PTFE.
8. End Connections: Threaded or socket.
9. Pressure Gage Connections: Integral seals for portable differential pressure meter.
10. Handle Style: Lever, with memory stop to retain set position.
11. CWP Rating: Minimum 125 psig.
12. Maximum Operating Temperature: 250 deg F.

D. Cast-Iron or Steel, Calibrated-Orifice, Balancing Valves:
1. Available Manufacturers: Subject to compliance with requirements, manufacturers offering products that may be incorporated into the Work include, but are not limited to, the following:
2. Manufacturers: Subject to compliance with requirements, provide products by one of the following:
3. Basis-of-Design Product: Subject to compliance with requirements, provide the product indicated on Drawings or a comparable product by one of the following:
   a. Armstrong Pumps, Inc.
   b. Bell & Gossett Domestic Pump; a division of ITT Industries.
   c. Flow Design Inc.
   d. Gerand Engineering Co.
   e. Griswold Controls.
   f. Taco.
   g. Tour & Andersson; available through Victaulic Company.
4. Body: Cast-iron or steel body, ball, plug, or globe pattern with calibrated orifice or venturi.
5. Ball: Brass or stainless steel.
6. Stem Seals: EPDM O-rings.
7. Disc: Glass and carbon-filled PTFE.
8. Seat: PTFE.
9. End Connections: Flanged or grooved.
10. Pressure Gage Connections: Integral seals for portable differential pressure meter.
11. Handle Style: Lever, with memory stop to retain set position.
12. CWP Rating: Minimum 125 psig.
13. Maximum Operating Temperature: 250 deg F.

E. Diaphragm-Operated, Pressure-Reducing Valves:
1. Available Manufacturers: Subject to compliance with requirements, manufacturers offering products that may be incorporated into the Work include, but are not limited to, the following:
2. Manufacturers: Subject to compliance with requirements, provide products by one of the following:
3. Basis-of-Design Product: Subject to compliance with requirements, provide the product indicated on Drawings or a comparable product by one of the following:
   a. Amtrol, Inc.
   b. Armstrong Pumps, Inc.
   c. Bell & Gossett Domestic Pump; a division of ITT Industries.
   d. Watts Regulator Co.; a division of Watts Water Technologies, Inc.
4. Body: Bronze or brass.
5. Disc: Glass and carbon-filled PTFE.
6. Seat: Brass.
7. Stem Seals: EPDM O-rings.
8. Diaphragm: EPT.
9. Low inlet-pressure check valve.
10. Inlet Strainer: Stainless steel, removable without system shutdown.
11. Valve Seat and Stem: Noncorrosive.
12. Valve Size, Capacity, and Operating Pressure: Selected to suit system in which installed, with operating pressure and capacity factory set and field adjustable.

F. Diaphragm-Operated Safety Valves:
1. Available Manufacturers: Subject to compliance with requirements, manufacturers offering products that may be incorporated into the Work include, but are not limited to, the following:

2. Manufacturers: Subject to compliance with requirements, provide products by one of the following:
3. Basis-of-Design Product: Subject to compliance with requirements, provide the product indicated on Drawings or a comparable product by one of the following:
   a. Amtrol, Inc.
   b. Armstrong Pumps, Inc.
   c. Bell & Gossett Domestic Pump; a division of ITT Industries.
   d. Watts Regulator Co.; a division of Watts Water Technologies, Inc.
4. Body: Bronze or brass.
5. Disc: Glass and carbon-filled PTFE.
6. Seat: Brass.
7. Stem Seals: EPDM O-rings.
8. Diaphragm: EPT.
9. Wetted, Internal Work Parts: Brass and rubber.
10. Inlet Strainer: Stainless steel, removable without system shutdown.
11. Valve Seat and Stem: Noncorrosive.
12. Valve Size, Capacity, and Operating Pressure: Comply with ASME Boiler and Pressure Vessel Code: Section IV, and selected to suit system in which installed, with operating pressure and capacity factory set and field adjustable.

G. Automatic Flow-Control Valves:
1. Available Manufacturers: Subject to compliance with requirements, manufacturers offering products that may be incorporated into the Work include, but are not limited to, the following:
2. Manufacturers: Subject to compliance with requirements, provide products by one of the following:
3. Basis-of-Design Product: Subject to compliance with requirements, provide the product indicated on Drawings or a comparable product by one of the following:
   a. Flow Design Inc.
   b. Griswold Controls.
4. Body: Brass or ferrous metal.
5. Piston and Spring Assembly: Stainless steel , tamper proof, self cleaning, and removable.
6. Combination Assemblies: Include bonze or brass-alloy ball valve.
7. Identification Tag: Marked with zone identification, valve number, and flow rate.
8. Size: Same as pipe in which installed.
9. Performance: Maintain constant flow, plus or minus 5 percent over system pressure fluctuations.
10. Minimum CWP Rating: 175 psig .
11. Maximum Operating Temperature: 200 deg F .

2.7 AIR CONTROL DEVICES

A. Available Manufacturers: Subject to compliance with requirements, manufacturers offering products that may be incorporated into the Work include, but are not limited to, the following:
B. Manufacturers: Subject to compliance with requirements, provide products by one of the following:
1. Amtrol, Inc.
2. Armstrong Pumps, Inc.
3. Bell & Gossett Domestic Pump; a division of ITT Industries.
4. Taco.

C. Manual Air Vents:
1. Body: Bronze.
2. Internal Parts: Nonferrous.
3. Operator: Screwdriver or thumbscrew.
4. Inlet Connection: NPS 1/2.
5. Discharge Connection: NPS 1/8.
6. CWP Rating: 150 psig.
7. Maximum Operating Temperature: 225 deg F.

D. Automatic Air Vents:
1. Body: Bronze or cast iron.

2. Internal Parts: Nonferrous.
3. Operator: Noncorrosive metal float.
4. Inlet Connection: NPS 1/2.
5. Discharge Connection: NPS 1/4.
6. CWP Rating: 150 psig.
7. Maximum Operating Temperature: 240 deg F.

E. Expansion Tanks:
1. Tank: Welded steel, rated for 125-psig working pressure and 375 deg F maximum operating temperature, with taps in bottom of tank for tank fitting and taps in end of tank for gage glass. Tanks shall be factory tested with taps fabricated and labeled according to ASME Boiler and Pressure Vessel Code: Section VIII, Division 1.
2. Air-Control Tank Fitting: Cast-iron body, copper-plated tube, brass vent tube plug, and stainless-steel ball check, 100-gal. unit only; sized for compression-tank diameter. Provide tank fittings for 125-psig working pressure and 250 deg F maximum operating temperature.
3. Tank Drain Fitting: Brass body, nonferrous internal parts; 125-psig working pressure and 240 deg F maximum operating temperature; constructed to admit air to compression tank, drain water, and close off system.
4. Gage Glass: Full height with dual manual shutoff valves, 3/4-inch-diameter gage glass, and slotted-metal glass guard.

F. -Type Expansion Tanks:
1. Tank: Welded steel, rated for 125-psig working pressure and 375 deg F maximum operating temperature. Factory test with taps fabricated and supports installed and labeled according to ASME Boiler and Pressure Vessel Code: Section VIII, Division 1.
2. : Securely sealed into tank to separate air charge from system water to maintain required expansion capacity.
3. Air-Charge Fittings: Schrader valve, stainless steel with EPDM seats.

G. Tangential-Type Air Separators:
1. Tank: Welded steel; ASME constructed and labeled for 125-psig minimum working pressure and 375 deg F maximum operating temperature.
2. Air Collector Tube: Perforated stainless steel, constructed to direct released air into expansion tank.
3. Tangential Inlet and Outlet Connections: Threaded for NPS 2 and smaller; flanged connections for NPS 2-1/2 and larger.
4. Blowdown Connection: Threaded.
5. Size: Match system flow capacity.

H. In-Line Air Separators:
1. Tank: One-piece cast iron with an integral weir constructed to decelerate system flow to maximize air separation.
2. Maximum Working Pressure: Up to 175 psig.
3. Maximum Operating Temperature: Up to 300 deg F.

I. Air Purgers:
1. Body: Cast iron with internal baffles that slow the water velocity to separate the air from solution and divert it to the vent for quick removal.
2. Maximum Working Pressure: 150 psig.
3. Maximum Operating Temperature: 250 deg F.

2.8 CHEMICAL TREATMENT

A. Bypass Chemical Feeder: Welded steel construction; 125-psig working pressure; 5-gal. capacity; with fill funnel and inlet, outlet, and drain valves.
1. Chemicals: Specially formulated, based on analysis of makeup water, to prevent accumulation of scale and corrosion in piping and connected equipment.

B. Ethylene and Propylene Glycol: Industrial grade with corrosion inhibitors and environmental-stabilizer additives for mixing with water in systems indicated to contain antifreeze or glycol solutions.

2.9 HYDRONIC PIPING SPECIALTIES

A. Y-Pattern Strainers:
   1. Body: ASTM A 126, Class B, cast iron with bolted cover and bottom drain connection.
   2. End Connections: Threaded ends for NPS 2 and smaller; flanged ends for NPS 2-1/2 and larger.
   3. Strainer Screen: 60-mesh startup strainer, and perforated stainless-steel basket with 50 percent free area.
   4. CWP Rating: 125 psig.

B. Basket Strainers:
   1. Body: ASTM A 126, Class B, high-tensile cast iron with bolted cover and bottom drain connection.
   2. End Connections: Threaded ends for NPS 2 and smaller; flanged ends for NPS 2-1/2 and larger.
   3. Strainer Screen: 60-mesh startup strainer, and perforated stainless-steel basket with 50 percent free area.
   4. CWP Rating: 125 psig.

C. T-Pattern Strainers:
   1. Body: Ductile or malleable iron with removable access coupling and end cap for strainer maintenance.
   2. End Connections: Grooved ends.
   3. Strainer Screen: 60-mesh startup strainer, and perforated stainless-steel basket with 57 percent free area.
   4. CWP Rating: 750 psig.

D. Stainless-Steel Bellow, Flexible Connectors:
   1. Body: Stainless-steel bellows with woven, flexible, bronze, wire-reinforcing protective jacket.
   2. End Connections: Threaded or flanged to match equipment connected.
   3. Performance: Capable of 3/4-inch misalignment.
   4. CWP Rating: 150 psig.
   5. Maximum Operating Temperature: 250 deg F.

E. Spherical, Rubber, Flexible Connectors:
   1. Body: Fiber-reinforced rubber body.
   2. End Connections: Steel flanges drilled to align with Classes 150 and 300 steel flanges.
   3. Performance: Capable of misalignment.
   4. CWP Rating: 150 psig.
   5. Maximum Operating Temperature: 250 deg F.

F. Expansion fittings are specified in Division 23 Section "Expansion Fittings and Loops for HVAC Piping."

PART 3 EXECUTION

3.1 PIPING APPLICATIONS

A. Hot-water heating piping, aboveground, NPS 21/2 and smaller, shall be any of the following:
   1. Type L, drawn-temper copper tubing, wrought-copper fittings, and brazed joints.
   2. Schedule 40 steel pipe; Class 150, malleable-iron fittings; cast-iron flanges and flange fittings; and threaded joints.

B. Hot-water heating piping, aboveground, NPS 3 and larger shall be any of the following:
   1. Schedule 40 steel pipe; grooved, mechanical joint coupling and fittings; and grooved, mechanical joints.

C. Hot-water heating piping installed belowground and within slabs shall be the following:
   1. Type K, annealed-temper copper tubing, wrought-copper fittings, and brazed joints. Use the fewest possible joints.

D. Chilled-water piping, aboveground, shall be the following:
   1. Type L, drawn-temper copper tubing, wrought-copper fittings, and brazed joints.

E. Chilled-water piping, aboveground, NPS 3 and larger, shall be the following:

1. Schedule 40 steel pipe, wrought-steel fittings and wrought-cast or forged-steel flanges and flange fittings, and welded and flanged joints.
2. Schedule 40 steel pipe; grooved, mechanical joint coupling and fittings; and grooved, mechanical joints.

F. Chilled-water piping installed belowground and within slabs shall be the following:
1. Type K, annealed-temper copper tubing, wrought-copper fittings, and brazed joints. Use the fewest possible joints.

G. Makeup-water piping installed aboveground shall be the following:
1. Type M, drawn-temper copper tubing, wrought-copper fittings, and soldered joints.

H. Makeup-Water Piping Installed Belowground and within Slabs: Type K, annealed-temper copper tubing, wrought-copper fittings, and soldered joints. Use the fewest possible joints.

I. Condensate-Drain Piping: Type M, drawn-temper copper tubing, wrought-copper fittings, and soldered joints.

J. Air-Vent Piping:
1. Inlet: Same as service where installed with metal-to-plastic transition fittings for plastic piping systems according to the piping manufacturer's written instructions.
2. Outlet: Type K, annealed-temper copper tubing with soldered or flared joints.

K. Safety-Valve-Inlet and -Outlet Piping for Hot-Water Piping: Same materials and joining methods as for piping specified for the service in which safety valve is installed with metal-to-plastic transition fittings for plastic piping systems according to the piping manufacturer's written instructions.

3.2 VALVE APPLICATIONS

A. Install shutoff-duty valves at each branch connection to supply mains, and at supply connection to each piece of equipment.

B. Install calibrated-orifice, balancing valves at each branch connection to return main.

C. Install calibrated-orifice, balancing valves in the return pipe of each heating or cooling terminal.

D. Install check valves at each pump discharge and elsewhere as required to control flow direction.

E. Install safety valves at hot-water generators and elsewhere as required by ASME Boiler and Pressure Vessel Code. Install drip-pan elbow on safety-valve outlet and pipe without valves to the outdoors; and pipe drain to nearest floor drain or as indicated on Drawings. Comply with ASME Boiler and Pressure Vessel Code: Section VIII, Division 1, for installation requirements.

F. Install pressure-reducing valves at makeup-water connection to regulate system fill pressure.

3.3 PIPING INSTALLATIONS

A. Drawing plans, schematics, and diagrams indicate general location and arrangement of piping systems. Indicate piping locations and arrangements if such were used to size pipe and calculate friction loss, expansion, pump sizing, and other design considerations. Install piping as indicated unless deviations to layout are approved on Coordination Drawings.

B. Install piping in concealed locations, unless otherwise indicated and except in equipment rooms and service areas.

C. Install piping indicated to be exposed and piping in equipment rooms and service areas at right angles or parallel to building walls. Diagonal runs are prohibited unless specifically indicated otherwise.

D. Install piping above accessible ceilings to allow sufficient space for ceiling panel removal.

E. Install piping to permit valve servicing.

F. Install piping at indicated slopes.

G. Install piping free of sags and bends.

H. Install fittings for changes in direction and branch connections.

I. Install piping to allow application of insulation.

J. Select system components with pressure rating equal to or greater than system operating pressure.

K. Install groups of pipes parallel to each other, spaced to permit applying insulation and servicing of valves.

L. Install drains, consisting of a tee fitting, NPS 3/4 ball valve, and short NPS 3/4 threaded nipple with cap, at low points in piping system mains and elsewhere as required for system drainage.

M. Install piping at a uniform grade of 0.2 percent upward in direction of flow.

N. Reduce pipe sizes using eccentric reducer fitting installed with level side up.

O. Install branch connections to mains using mechanically formed tee fittings in main pipe, with the branch connected to the bottom of the main pipe. For up-feed risers, connect the branch to the top of the main pipe. NO SADDLE CONNECTIONS PERMITTED.

P. Install valves according to Division 23 Section "General-Duty Valves for HVAC Piping."

Q. Install unions in piping, NPS 2 and smaller, adjacent to valves, at final connections of equipment, and elsewhere as indicated.

R. Install flanges in piping, NPS 2-1/2 and larger, at final connections of equipment and elsewhere as indicated.

S. Install strainers on inlet side of each control valve, pressure-reducing valve, solenoid valve, in-line pump, and elsewhere as indicated. Install NPS 3/4 nipple and ball valve in blowdown connection of strainers NPS 2 and larger. Match size of strainer blowoff connection for strainers smaller than NPS 2.

T. Install expansion loops, expansion joints, anchors, and pipe alignment guides as specified in Division 23 Section "Expansion Fittings and Loops for HVAC Piping."

U. Identify piping as specified in Division 23 Section "Identification for HVAC Piping and Equipment."

V. Install sleeves for piping penetrations of walls, ceilings, and floors. Comply with requirements for sleeves specified in Division 23 Section "Sleeves and Sleeve Seals for HVAC Piping."

W. Install sleeve seals for piping penetrations of concrete walls and slabs. Comply with requirements for sleeve seals specified in Division 23 Section "Sleeves and Sleeve Seals for HVAC Piping."

X. Install escutcheons for piping penetrations of walls, ceilings, and floors. Comply with requirements for escutcheons specified in Division 23 Section "Escutcheons for HVAC Piping."

3.4 HANGERS AND SUPPORTS

A. Hanger, support, and anchor devices are specified in Division 23 Section "Hangers and Supports for HVAC Piping and Equipment." Comply with the following requirements for maximum spacing of supports.

B. Seismic restraints are specified in Division 23 Section "Vibration and Seismic Controls for HVAC Piping and Equipment."

C. Install the following pipe attachments:

1. Adjustable steel clevis hangers for individual horizontal piping less than 20 feet long.
2. Adjustable roller hangers and spring hangers for individual horizontal piping 20 feet or longer.
3. Pipe Roller: MSS SP-58, Type 44 for multiple horizontal piping 20 feet or longer, supported on a trapeze.
4. Spring hangers to support vertical runs.
5. Provide copper-clad hangers and supports for hangers and supports in direct contact with copper pipe.

D. Install hangers for steel piping with the following maximum spacing and minimum rod sizes:

1. NPS 3/4: Maximum span, 7 feet; minimum rod size, 1/4 inch.
2. NPS 1: Maximum span, 7 feet; minimum rod size, 1/4 inch.
3. NPS 1-1/2: Maximum span, 9 feet; minimum rod size, 3/8 inch.
4. NPS 2: Maximum span, 10 feet; minimum rod size, 3/8 inch.
5. NPS 2-1/2: Maximum span, 11 feet; minimum rod size, 3/8 inch.
6. NPS 3: Maximum span, 12 feet; minimum rod size, 3/8 inch.
7. NPS 4: Maximum span, 14 feet; minimum rod size, 1/2 inch.
8. NPS 6: Maximum span, 17 feet; minimum rod size, 1/2 inch.
9. NPS 8: Maximum span, 19 feet; minimum rod size, 5/8 inch.
10. NPS 10: Maximum span, 20 feet; minimum rod size, 3/4 inch.
11. NPS 12: Maximum span, 23 feet; minimum rod size, 7/8 inch.
12. NPS 14: Maximum span, 25 feet; minimum rod size, 1 inch.
13. NPS 16: Maximum span, 27 feet; minimum rod size, 1 inch.
14. NPS 18: Maximum span, 28 feet; minimum rod size, 1-1/4 inches.
15. NPS 20: Maximum span, 30 feet; minimum rod size, 1-1/4 inches.

E. Install hangers for drawn-temper copper piping with the following maximum spacing and minimum rod sizes:

1. NPS 3/4: Maximum span, 5 feet; minimum rod size, 1/4 inch.
2. NPS 1: Maximum span, 6 feet; minimum rod size, 1/4 inch.

3. NPS 1-1/2: Maximum span, 8 feet; minimum rod size, 3/8 inch.
4. NPS 2: Maximum span, 8 feet; minimum rod size, 3/8 inch.
5. NPS 2-1/2: Maximum span, 9 feet; minimum rod size, 3/8 inch.
6. NPS 3: Maximum span, 10 feet; minimum rod size, 3/8 inch.

F. Support vertical runs at roof, at each floor, and at 10-foot intervals between floors.

3.5 PIPE JOINT CONSTRUCTION

A. Join pipe and fittings according to the following requirements and Division 23 Sections specifying piping systems.

B. Ream ends of pipes and tubes and remove burrs. Bevel plain ends of steel pipe.

C. Remove scale, slag, dirt, and debris from inside and outside of pipe and fittings before assembly.

D. Soldered Joints: Apply ASTM B 813, water-flushable flux, unless otherwise indicated, to tube end. Construct joints according to ASTM B 828 or CDA's "Copper Tube Handbook," using lead-free solder alloy complying with ASTM B 32.

E. Brazed Joints: Construct joints according to AWS's "Brazing Handbook," "Pipe and Tube" Chapter, using copper-phosphorus brazing filler metal complying with AWS A5.8.

F. Threaded Joints: Thread pipe with tapered pipe threads according to ASME B1.20.1. Cut threads full and clean using sharp dies. Ream threaded pipe ends to remove burrs and restore full ID. Join pipe fittings and valves as follows:

1. Apply appropriate tape or thread compound to external pipe threads unless dry seal threading is specified.
2. Damaged Threads: Do not use pipe or pipe fittings with threads that are corroded or damaged. Do not use pipe sections that have cracked or open welds.

G. Welded Joints: Construct joints according to AWS D10.12/D10.12M, using qualified processes and welding operators according to Part 1 "Quality Assurance" Article.

H. Flanged Joints: Select appropriate gasket material, size, type, and thickness for service application. Install gasket concentrically positioned. Use suitable lubricants on bolt threads.

1. Grooved Joints: Assemble joints with coupling and gasket, lubricant, and bolts. Cut or roll grooves in ends of pipe based on pipe and coupling manufacturer's written instructions for pipe wall thickness. Use grooved-end fittings and rigid, grooved-end-pipe couplings.

3.6 HYDRONIC SPECIALTIES INSTALLATION

A. Install automatic air vents at high points of system piping in mechanical equipment rooms, and at high points in the building pipe riser. Manual vents at heat-transfer coils and elsewhere as required for air venting.

B. Install piping from boiler air outlet, air separator, or air purger to expansion tank with a 2 percent upward slope toward tank.

C. Install in-line air separators in pump suction. Install drain valve on air separators NPS 2 and larger.

D. Install tangential air separator in pump suction. Install blowdown piping with full-port ball valve; extend full size to nearest floor drain.

E. Install bypass chemical feeders in each hydronic system where indicated, in upright position with top of funnel not more than 48 inches above the floor. Install feeder in minimum NPS 3/4 bypass line, from main with full-size, full-port, ball valve in the main between bypass connections. Install NPS 3/4 pipe from chemical feeder drain, to nearest equipment drain and include a full-size, full-port, ball valve.

F. Install expansion tanks above the air separator. Install tank fitting in tank bottom and charge tank. Use manual vent for initial fill to establish proper water level in tank.

1. Install tank fittings that are shipped loose.
2. Support tank from floor or structure above with sufficient strength to carry weight of tank, piping connections, fittings, plus tank full of water. Do not overload building components and structural members.

G. Install expansion tanks on the floor. Vent and purge air from hydronic system, and ensure tank is properly charged with air to suit system Project requirements.

3.7 TERMINAL EQUIPMENT CONNECTIONS

A. Sizes for supply and return piping connections shall be the same as or larger than equipment connections.

B. Install control valves in accessible locations close to connected equipment.

C. Install ports for pressure gages and thermometers at coil inlet and outlet connections for larger air handling systems only according to Division 23 Section "Meters and Gages for HVAC Piping."

3.8 CHEMICAL TREATMENT

A. Perform an analysis of makeup water to determine type and quantities of chemical treatment needed to keep system free of scale, corrosion, and fouling, and to sustain the following water characteristics:
   1. pH: 9.0 to 10.5.
   2. "P" Alkalinity: 100 to 500 ppm.
   3. Boron: 100 to 200 ppm.
   4. Chemical Oxygen Demand: Maximum of 100 ppm. Revise this value if closed system contains glycol.
   5. Corrosion Inhibitor:
      a. Sodium Nitrate: 1000 to 1500 ppm.
   6. Soluble Copper: Maximum of 0.20 ppm.
   7. Tolyiriazole Copper and Yellow Metal Corrosion Inhibitor: Minimum of 10 ppm.
   8. Total Suspended Solids: Maximum of 10 ppm.
   9. Ammonia: Maximum of 20 ppm.
   10. Free Caustic Alkalinity: Maximum of 20 ppm.
   11. Microbiological Limits:
      a. Total Aerobic Plate Count: Maximum of 1000 organisms/mL.
      b. Total Anaerobic Plate Count: Maximum of 100 organisms/mL.
      c. Nitrate Reducers: 100 organisms/mL.
      d. Sulfate Reducers: Maximum of zero organisms/mL.
      e. Iron Bacteria: Maximum of zero organisms/mL.

B. Install bypass chemical feeders in each hydronic system where indicated.
   1. Install in upright position with top of funnel not more than 48 inches above the floor.
   2. Install feeder in minimum NPS 3/4 bypass line, from main with full-size, full-port, ball valve in the main between bypass connections.
   3. Install NPS 3/4 pipe from chemical feeder drain to nearest equipment drain and include a full-size, full-port, ball valve.

C. Fill system with fresh water and add liquid alkaline compound with emulsifying agents and detergents to remove grease and petroleum products from piping. Circulate solution for a minimum of 24 hours, drain, clean strainer screens, and refill with fresh water.

D. Add initial chemical treatment and maintain water quality in ranges noted above for the first year of operation.

3.9 FIELD QUALITY CONTROL

A. Prepare hydronic piping according to ASME B31.9 and as follows:
   1. Leave joints, including welds, uninsulated and exposed for examination during test.
   2. Provide temporary restraints for expansion joints that cannot sustain reactions due to test pressure. If temporary restraints are impractical, isolate expansion joints from testing.
   3. Flush hydronic piping systems with clean water; then remove and clean or replace strainer screens.
   4. Isolate equipment from piping. If a valve is used to isolate equipment, its closure shall be capable of sealing against test pressure without damage to valve. Install blinds in flanged joints to isolate equipment.
   5. Install safety valve, set at a pressure no more than one-third higher than test pressure, to protect against damage by expanding liquid or other source of overpressure during test.

B. Perform the following tests on hydronic piping:
   1. Use ambient temperature water as a testing medium unless there is risk of damage due to freezing. Another liquid that is safe for workers and compatible with piping may be used.
   2. While filling system, use vents installed at high points of system to release air. Use drains installed at low points for complete draining of test liquid.
   3. Isolate expansion tanks and determine that hydronic system is full of water.

4. Subject piping system to hydrostatic test pressure that is not less than 2 times the system's working pressure. Test pressure shall not exceed maximum pressure for any vessel, pump, valve, or other component in system under test. Verify that stress due to pressure at bottom of vertical runs does not exceed 90 percent of specified minimum yield strength or 1.7 times "SE" value in Appendix A in ASME B31.9, "Building Services Piping."
5. After hydrostatic test pressure has been applied for at least 8 hours, examine piping, joints, and connections for leakage. Owner must witness and approve test performance. Eliminate leaks by tightening, repairing, or replacing components, and repeat hydrostatic test until there are no leaks.
6. Prepare written report of testing.

C. Perform the following before operating the system:
1. Open manual valves fully.
2. Inspect pumps for proper rotation.
3. Set makeup pressure-reducing valves for required system pressure and document pressure settings to Qualcomm Construction Project Manager.
4. Inspect air vents at high points of system and determine if all are installed and operating freely (automatic type), or bleed air completely (manual type).
5. Set temperature controls so all coils are calling for full flow.
6. Inspect and set operating temperatures of hydronic equipment, such as boilers, chillers, cooling towers, to specified values.

END OF SECTION 232113

SECTION 232116 - HYDRONIC PIPING SPECIALTIES

PART 1 GENERAL

1.1 SUMMARY

A. Section includes special-duty valves and specialties for the following:
   1. Chilled-water piping.
   2. Process-water piping.
   3. Makeup-water piping.
   4. Condensate-drain piping.
   5. Air-vent piping.

1.2 ACTION SUBMITTALS

A. Product Data: For each type of the following:
   1. Valves: Include flow and pressure drop curves based on manufacturer's testing for calibrated-orifice balancing valves and automatic flow-control valves.
   2. Hydronic specialties.

1.3 CLOSEOUT SUBMITTALS

A. Operation and Maintenance Data: For air-control devices, hydronic specialties, and special-duty valves to include in emergency, operation, and maintenance manuals.

1.4 MAINTENANCE MATERIAL SUBMITTALS

A. Differential Pressure Meter: For each type of balancing valve and automatic flow control valve, include flowmeter, probes, hoses, flow charts, and carrying case.

1.5 QUALITY ASSURANCE

A. Pipe Welding: Qualify procedures and operators according to ASME Boiler and Pressure Vessel Code: Section IX.
   1. Safety valves and pressure vessels shall bear the appropriate ASME label. Fabricate and stamp air separators and expansion tanks to comply with ASME Boiler and Pressure Vessel Code: Section VIII, Division 1.

PART 2 PRODUCTS

2.1 MANUFACTURERS

A. Provide valves and accessories as manufactured by Apollo, Nibco, Kitz, or equal.

2.2 PERFORMANCE REQUIREMENTS

A. Hydronic piping components and installation shall be capable of withstanding the following minimum working pressure and temperature unless otherwise indicated:
   1. Chilled-Water Piping: 150 psig at 200 deg F.
   2. Process-Water Piping: 150 psig at 200 deg F.
   3. Makeup-Water Piping: 120 psig at 150 deg F.
   4. Condensate-Drain Piping: 150 deg F.
   5. Air-Vent Piping: 200 deg F.
   6. Safety-Valve-Inlet and -Outlet Piping: Equal to the pressure of the piping system to which it is attached.

2.3 VALVES

A. Check, Ball, and Butterfly Valves: Comply with requirements specified in Section 230523.12 "Ball Valves for HVAC Piping," Section 230523.13 "Butterfly Valves for HVAC Piping," and Section 230523.14 "Check Valves for HVAC Piping."

B. Diaphragm-Operated, Pressure-Reducing Valves: ASME labeled.
   1. Body: Bronze or brass.
   2. Disc: Glass and carbon-filled PTFE.
   3. Seat: Brass.
   4. Stem Seals: EPDM O-rings.
   5. Diaphragm: EPT.
   6. Low inlet-pressure check valve.
   7. Inlet Strainer: Stainless steel, removable without system shutdown.
   8. Valve Seat and Stem: Noncorrosive.
   9. Valve Size, Capacity, and Operating Pressure: Selected to suit system in which installed, with operating pressure and capacity factory set and field adjustable.

C. Diaphragm-Operated Safety Valves: ASME labeled.
   1. Body: Bronze or brass.
   2. Disc: Glass and carbon-filled PTFE.
   3. Seat: Brass.
   4. Stem Seals: EPDM O-rings.
   5. Diaphragm: EPT.
   6. Wetted, Internal Work Parts: Brass and rubber.
   7. Inlet Strainer: Stainless steel, removable without system shutdown.
   8. Valve Seat and Stem: Noncorrosive.
   9. Valve Size, Capacity, and Operating Pressure: Comply with ASME Boiler and Pressure Vessel Code: Section IV, and selected to suit system in which installed, with operating pressure and capacity factory set and field adjustable.

2.4 AIR-CONTROL DEVICES

A. Manual Air Vents:
   1. Body: Bronze.
   2. Internal Parts: Nonferrous.
   3. Operator: Screwdriver or thumbscrew.
   4. Inlet Connection: NPS 1/2.
   5. Discharge Connection: NPS 1/8.
   6. CWP Rating: 150 psig.
   7. Maximum Operating Temperature: 225 deg F.

B. Bladder-Type Expansion Tanks:
   1. Tank: Welded steel, rated for 125-psig working pressure and 375 deg F maximum operating temperature, with taps in bottom of tank for tank fitting and taps in end of tank for gage glass. Factory test after taps are fabricated and supports installed and are labeled according to ASME Boiler and Pressure Vessel Code: Section VIII, Division 1.
   2. Bladder: Securely sealed into tank to separate air charge from system water to maintain required expansion capacity.
   3. Air-Charge Fittings: Schrader valve, stainless steel with EPDM seats.
   4. Tank Drain Fitting: Brass body, nonferrous internal parts; 125-psig working pressure and 240 deg F maximum operating temperature; constructed to admit air to compression tank, drain water, and close off system.
   5. Gage Glass: Full height with dual manual shutoff valves, 3/4-inch-diameter gage glass, and slotted-metal glass guard.

C. Tangential-Type Air Separators:
   1. Tank: Welded steel; ASME constructed and labeled for 125-psig minimum working pressure and 375 deg F maximum operating temperature.

2. Air Collector Tube: Perforated stainless steel, constructed to direct released air into expansion tank.
3. Tangential Inlet and Outlet Connections: Threaded for NPS 2 and smaller; flanged connections for NPS 2-1/2 and larger.
4. Blowdown Connection: Threaded.
5. Size: Match system flow capacity.

2.5 HYDRONIC PIPING SPECIALTIES

A. Y-Pattern Strainers:
1. Body: ASTM A 126, Class B, cast iron with bolted cover and bottom drain connection.
2. End Connections: Threaded ends for NPS 2 and smaller; flanged ends for NPS 2-1/2 and larger.
3. Strainer Screen: Stainless-steel, 60-mesh strainer, or perforated stainless-steel basket.
4. CWP Rating: 125 psig.

B. Stainless-Steel Bellow, Flexible Connectors:
1. Body: Stainless-steel bellows with woven, flexible, bronze, wire-reinforcing protective jacket.
2. End Connections: Threaded or flanged to match equipment connected.
3. Performance: Capable of 3/4-inch misalignment.
4. CWP Rating: 150 psig.
5. Maximum Operating Temperature: 250 deg F.

C. Expansion Fittings: Comply with requirements in Section 230516 "Expansion Fittings and Loops for HVAC Piping."Section 15124 "Expansion Fittings and Loops for HVAC Piping."

PART 3 EXECUTION

3.1 VALVE APPLICATIONS

A. Install shutoff-duty valves at each branch connection to supply mains and at supply connection to each piece of equipment.
B. Install rotameter flowmeters at each branch connection from manufacturing floor equipment to return main.
C. Install check valves at each pump discharge and elsewhere as required to control flow direction.
D. Install safety valves as required by ASME Boiler and Pressure Vessel Code. Install drip-pan elbow on safety-valve outlet and pipe without valves to the outdoors; pipe drain to nearest floor drain or as indicated on Drawings. Comply with ASME Boiler and Pressure Vessel Code: Section VIII, Division 1, for installation requirements.
E. Install pressure-reducing valves at makeup-water connection to regulate system fill pressure.

3.2 HYDRONIC SPECIALTIES INSTALLATION

A. Install manual air vents at high points in piping, at heat-transfer coils, and elsewhere as required for system air venting.
B. Install automatic air vents at high points of system piping in mechanical equipment rooms only. Install manual vents at heat-transfer coils and elsewhere as required for air venting.
C. Install piping from air separator to expansion tank with a 2 percent upward slope toward tank.
D. Install tangential air separator in pump suction. Install blowdown piping with full-port ball valve; extend full size to nearest floor drain.
E. Install expansion tanks on the floor. Vent and purge air from hydronic system and ensure that tank is properly charged with air to suit system Project requirements.

END OF SECTION 232116

SECTION 232123 - HYDRONIC PUMPS

PART 1 GENERAL

1.1 SUMMARY

A. Section Includes:
   1. Split coupled, vertically mounted, in-line centrifugal pumps.

1.2 DEFINITIONS

A. Buna-N: Nitrile rubber.
B. EPT: Ethylene propylene terpolymer.

1.3 ACTION SUBMITTALS

A. Product Data: For each type of pump. Include certified performance curves and rated capacities, operating characteristics, furnished specialties, final impeller dimensions, and accessories for each type of product indicated. Indicate pump's operating point on curves.
B. Additional Product Data: For each type of VFD. Include certified performance data, rated capacities, operating characteristics, furnished specialties, and accessories for each type of product indicated.

1.4 INFORMATIONAL SUBMITTALS

A. Coordination Drawings: Equipment skid, drawn to scale, on which the following items are shown and coordinated with each other, using input from installers of the items involved:
   1. Pump maintenance clearance.
   2. Pre-manufactured skid to which pumps will be attached.

1.5 CLOSEOUT SUBMITTALS

A. Operation and Maintenance Data: For pumps to include in emergency, operation, and maintenance manuals.

1.6 WARRANTY

A. Special Warranty: Manufacturer's standard form in which manufacturer agrees to repair or replace components of pumps that fail in materials or workmanship within specified warranty period.
   1. Failures include, but are not limited to, the following:
      a. Structural failures including pump body and supports.
      b. Faulty operation of controls.
      c. Deterioration of metals, metal finishes, and other materials beyond normal use.
   2. Warranty Periods: From date of Substantial Completion.
      a. Pumps:
         1) Split coupled, vertically mounted, in-line centrifugal pumps: Five years.

PART 2 PRODUCTS

2.1 SEPARATELY COUPLED, VERTICALLY MOUNTED, IN-LINE CENTRIFUGAL PUMPS

A. Provide pumps as manufactured by Grundfos, Armstrong, Bell & Gossett.
B. Description: Factory-assembled and -tested, centrifugal, overhung-impeller, separately coupled, in-line pump as defined in HI 1.1-1.2 and HI 1.3; designed for installation with pump and motor shafts mounted vertically.
C. Pump Construction:

1. Casing: Radially split, cast iron, with threaded gage tappings at inlet and outlet, replaceable bronze wear rings, and threaded companion-flange connections.
2. Impeller: ASTM B 584, cast bronze; statically and dynamically balanced, keyed to shaft, and secured with a locking cap screw. For pumps not frequency-drive controlled, trim impeller to match specified performance.
3. Pump Shaft: Stainless steel.
4. Seal: Mechanical seal consisting of carbon rotating ring against a ceramic seat held by a stainless-steel spring, and Buna-N bellows and gasket. Include water slinger on shaft between motor and seal.
5. Seal: Packing seal consisting of stuffing box with a minimum of four rings of graphite-impregnated braided yarn with bronze lantern ring between center two graphite rings, and bronze packing gland.
6. Pump Bearings: Permanently lubricated ball bearings.

D. Shaft Coupling: Axially split spacer coupling.

E. Motor: Single speed and rigidly mounted to pump casing with lifting eyebolt and supporting lugs in motor enclosure.
1. Electrical Components, Devices, and Accessories: Listed and labeled as defined in NFPA 70, by a qualified testing agency, and marked for intended location and application.
2. Comply with NEMA designation, temperature rating, service factor, and efficiency requirements for motors specified in Section 230513 "Common Motor Requirements for HVAC Equipment."
a. Enclosure: Totally enclosed, fan cooled.
b. Enclosure Materials: Cast iron.
c. Motor Bearings: Permanently lubricated ball bearings.
d. Efficiency: Premium efficient.
e. NEMA Design: 3R.
f. Service Factor: 1.15.

F. Capacities and Characteristics:
1. See plan equipment schedule.

2.2 PUMP SPECIALTY FITTINGS

A. Suction Diffuser:
1. Angle pattern.
2. 175-psig pressure rating, cast-iron body and end cap, pump-inlet fitting.
3. Bronze startup and bronze or stainless-steel serviceable strainers.
4. Bronze or stainless-steel straightening vanes.
5. Drain plug.
6. Factory-fabricated support.

PART 3 EXECUTION

3.1 EXAMINATION

A. Examine equipment foundations and anchor-bolt locations for compliance with requirements for installation tolerances and other conditions affecting performance of the Work.

B. Examine roughing-in for piping systems to verify actual locations of piping connections before pump installation.

C. Examine foundations for suitable conditions where pumps are to be installed.

D. Proceed with installation only after unsatisfactory conditions have been corrected.

3.2 PUMP INSTALLATION

A. Comply with HI 1.4 and HI 2.4.

B. Install pumps to provide access for periodic maintenance including removing motors, impellers, couplings, and accessories.

C. Independently support pumps and piping so weight of piping is not supported by pumps and weight of pumps is not supported by piping.
D. Equipment Mounting: Install in-line pumps with factory pump volute base supports of size required to support weight of in-line pumps.

3.3 ALIGNMENT

A. Perform alignment service.
B. Comply with requirements in Hydronics Institute standards for alignment of pump and motor shaft. Add shims to the motor feet and bolt motor to base frame. Do not use grout between motor feet and base frame.
C. Comply with pump and coupling manufacturers' written instructions.
D. After alignment is correct, tighten foundation bolts evenly but not too firmly. Completely fill baseplate with nonshrink, nonmetallic grout while metal blocks and shims or wedges are in place. After grout has cured, fully tighten foundation bolts.

3.4 CONNECTIONS

A. Where installing piping adjacent to pump, allow space for service and maintenance.
B. Connect piping to pumps. Install valves that are same size as piping connected to pumps.
C. Install suction and discharge pipe sizes equal to or greater than diameter of pump nozzles.
D. Install check and shutoff valves on discharge side of pumps.
E. Install Y-type strainer and shutoff valve on suction side of pumps.
F. Install flexible connectors on suction and discharge sides of base-mounted pumps between pump casing and valves.
G. Install pressure gages on pump suction and discharge or at integral pressure-gage tapping or install single gage with multiple-input selector valve.
H. Ground equipment according to NEC.
I. Connect wiring according to NEC.

3.5 STARTUP SERVICE

1. Complete installation and startup checks according to manufacturer's written instructions.
2. Check piping connections for tightness.
3. Clean strainers on suction piping.
4. Perform the following startup checks for each pump before starting:
   a. Verify bearing lubrication.
   b. Verify that pump is free to rotate by hand and that pump for handling hot liquid is free to rotate with pump hot and cold. If pump is bound or drags, do not operate until cause of trouble is determined and corrected.
   c. Verify that pump is rotating in the correct direction.
5. Prime pump by opening suction valves and closing drains, and prepare pump for operation.
6. Start motor.
7. Open discharge valve slowly.

3.6 DEMONSTRATION

A. Train Owner's maintenance personnel to adjust, operate, and maintain hydronic pumps.

END OF SECTION 232123

SECTION 232500 - HVAC WATER TREATMENT

PART 1 GENERAL

1.1 SUMMARY

A. Section Includes:
1. HVAC water treatment.
2. Manual chemical-feed equipment.
3. Automatic chemical-feed equipment.
4. Ozone-generator biocide equipment.
5. Stainless steel pipes and fittings.
6. UV biocide equipment.
7. Chemical-treatment test equipment.
8. Chemicals.
9. Inhibited ethylene glycol and propylene glycol.
10. HVAC makeup-water softener.
11. RO equipment for HVAC makeup water.
12. Filtration equipment.

1.2 DEFINITIONS

A. EEPROM: Electrically erasable, programmable read-only memory.
B. PPM: Parts per million.
C. RO: Reverse osmosis.
D. TDS: Total dissolved solids consist of salts and other materials that combine with water as a solution.
E. TSS: Total suspended solids include both organic and inorganic solids that are suspended in the water. These solids may include silt, plankton, and industrial wastes.

1.3 ACTION SUBMITTALS

A. Product Data: Include rated capacities, operating characteristics, and furnished specialties and accessories for the following products:
1. Bypass feeders.
2. Water meters.
3. Inhibitor injection timers.
4. pH controllers.
5. TDS controllers.
6. TSS controllers.
7. Biocide feeder timers.
8. Chemical solution tanks.
9. Injection pumps.
10. Ozone generators.
11. UV-irradiation units.
12. Chemical test equipment.
13. Chemical material safety data sheets.
14. Inhibited ethylene glycol.
15. Inhibited propylene glycol.
16. Water softeners.
17. RO units.
18. Multimedia filters.
19. Self-cleaning strainers.
20. Replaceable bag- or cartridge-type filters.

21. Centrifugal separators.

B. Shop Drawings: Pretreatment equipment and chemical- and ozone-generator-biocide treatment equipment, showing tanks, maintenance space required, and piping connections to HVAC systems.
   1. Include plans, elevations, sections, and attachment details.
   2. Include diagrams for power and control wiring.

1.4 INFORMATIONAL SUBMITTALS

A. Seismic Qualification Certificates: For chemical-treatment equipment and components, from manufacturer.
   1. Basis for Certification: Indicate whether withstand certification is based on actual test of assembled components or on calculation.
   2. Dimensioned Outline Drawings of Equipment Unit: Identify center of gravity and locate and describe mounting and anchorage provisions.
   3. Detailed description of equipment anchorage devices on which the certification is based and their installation requirements.

B. Water-Analysis Provider Qualifications: Verification of experience and capability of HVAC water-treatment service provider.

C. Field quality-control reports.

D. Water-Treatment Program: Written sequence of operation on an annual basis for the application equipment required to achieve water quality defined in "Performance Requirements" Article.

E. Water Analysis: Illustrate water quality available at Project site.

F. Passivation Confirmation Report: Verify passivation of galvanized-steel surfaces, and confirm this observation in a letter to Architect.

1.5 CLOSEOUT SUBMITTALS

A. Operation and Maintenance Data: For sensors, injection pumps, water-filtration units, and controllers to include in emergency, operation, and maintenance manuals.

1.6 QUALITY ASSURANCE

A. HVAC Water-Treatment Service Provider Qualifications: An experienced HVAC water-treatment service provider, capable of analyzing water qualities, installing water-treatment equipment, and applying water treatment as specified in this Section.

PART 2 PRODUCTS

2.1 HVAC WATER TREATMENT

2.2 PERFORMANCE REQUIREMENTS

A. Provide all hardware, chemicals, and other material necessary to maintain HVAC water quality in all systems as indicated in this Specification. Water quality for HVAC systems shall minimize corrosion, scale buildup, and biological growth for optimum efficiency of HVAC equipment without creating a hazard to operating personnel or to the environment.

B. Base HVAC water treatment on quality of water available at Project site, HVAC system equipment material characteristics and functional performance characteristics, operating personnel capabilities, and requirements and guidelines of authorities having jurisdiction.

C. Closed hydronic systems, including hot-water heating below 250 deg F, and chilled water shall have the following water qualities:
   1. pH: Maintain a value within 9.0 to 10.5.
   2. "P" Alkalinity: Maintain a value within 100 to 500 ppm.
   3. Boron: Maintain a value within 100 to 200 ppm.
   4. Chemical Oxygen Demand: Maintain a maximum value of 100 ppm.
   5. Soluble Copper: Maintain a maximum value of 0.20 ppm.
   6. TSS: Maintain a maximum value of 10 ppm.
   7. Ammonia: Maintain a maximum value of 20 ppm.

8. Free Caustic Alkalinity: Maintain a maximum value of 20 ppm.
9. Microbiological Limits:
    a. Total Aerobic Plate Count: Maintain a maximum value of 1000 organisms/mL.
    b. Total Anaerobic Plate Count: Maintain a maximum value of 100 organisms/mL.
    c. Nitrate Reducers: Maintain a maximum value of 100 organisms/mL.
    d. Sulfate Reducers: Maintain a maximum value of zero organisms/mL.
    e. Iron Bacteria: Maintain a maximum value of zero organisms/mL.

D. Open hydronic systems, including condenser water, shall have the following water qualities:
1. pH: Maintain a value within 9.0 to 10.5.
2. "P" Alkalinity: Maintain a value within 100 to 500 ppm.
3. Boron: Maintain a value within 100 to 200 ppm.
4. Chemical Oxygen Demand: Maintain a maximum value of 100 ppm.
5. Soluble Copper: Maintain a maximum value of 0.20 ppm.
6. TSS: Maintain a maximum value of 10 ppm.
7. Ammonia: Maintain a maximum value of 20 ppm.
8. Free Caustic Alkalinity: Maintain a maximum value of 20 ppm.
9. Microbiological Limits:
    a. Total Aerobic Plate Count: Maintain a maximum value of 1000 organisms/mL.
    b. Total Anaerobic Plate Count: Maintain a maximum value of 100 organisms/mL.
    c. Nitrate Reducers: Maintain a maximum value of 100 organisms/mL.
    d. Sulfate Reducers: Maintain a maximum value of zero organisms/mL.
    e. Iron Bacteria: Maintain a maximum value of zero organisms/mL.

E. Passivation for Galvanized Steel:
1. Passivation of all galvanized-steel cooling towers and other system components must be conducted strictly in accordance with manufacturer's instructions in order to validate warranties. During the required passivation period, all water-quality parameters must be maintained in accordance with manufacturer's specifications, and all other requirements must be observed.

F. Steam Boiler and Steam Condensate:
1. Steam Condensate:
2. pH: Maintain a value within 9.0 to 10.5.
3. "P" Alkalinity: Maintain a value within 100 to 500 ppm.
4. Boron: Maintain a value within 100 to 200 ppm.
5. Chemical Oxygen Demand: Maintain a maximum value of 100 ppm.
6. Soluble Copper: Maintain a maximum value of 0.20 ppm.
7. TSS: Maintain a maximum value of 10 ppm.
8. Ammonia: Maintain a maximum value of 20 ppm.
9. Free Caustic Alkalinity: Maintain a maximum value of 20 ppm.
10. Microbiological Limits:
    a. Total Aerobic Plate Count: Maintain a maximum value of 1000 organisms/mL.
    b. Total Anaerobic Plate Count: Maintain a maximum value of 100 organisms/mL.
    c. Nitrate Reducers: Maintain a maximum value of 100 organisms/mL.
    d. Sulfate Reducers: Maintain a maximum value of zero organisms/mL.
    e. Iron Bacteria: Maintain a maximum value of zero organisms/mL.

2.3 MANUAL CHEMICAL-FEED EQUIPMENT

A. Bypass Feeders: Steel, with corrosion-resistant exterior coating, minimum 3-1/2-inchfill opening in the top, and NPS 3/4 bottom inlet and top side outlet. Provide quarter- turn or threaded fill cap with gasket seal and diaphragm arranged to lock the top onto the feeder when exposed to system pressure in the vessel. Provide a NPS 3/4 IN quarter-turn valve on inlet and outlet.
1. Capacity: 5 gal..
2. Minimum Working Pressure: 125 psig.

2.4 AUTOMATIC CHEMICAL-FEED EQUIPMENT

A. Water Meter, Oscillating Piston:
   1. AWWA C700, oscillating-piston, magnetic-drive, totalization meter.
   2. Body: Bronze.
   3. Minimum Working-Pressure Rating: 150 psig.
   4. Maximum Pressure Loss at Design Flow: 3 psig
   5. Registration: Gallons or cubic feet
   6. End Connections: Threaded.
   7. Controls: Flow-control switch with normally open contacts, rated for maximum 10 A, 250-V ac, that will momentarily close at adjustable increments of total flow.
   8. Provide an electronic or digital interface for flow rate indication at central workstation compatible with DDC system, as described in Section 230923 "Direct Digital Control (DDC) System for HVAC." Low-voltage signal must be capable of transmitting 1000 feet.

B. Water Meter, Turbine Type, Threaded:
   1. AWWA C701, turbine-type, totalization meter.
   2. Body: Bronze.
   3. Minimum Working-Pressure Rating: 100 psig.
   4. Maximum Pressure Loss at Design Flow: 3 psig.
   5. Registration: Gallons or cubic feet.
   6. End Connections: Threaded.
   7. Controls: Flow-control switch with normally open contacts, rated for maximum 10 A, 250-V ac, that will momentarily close at adjustable increments of total flow.
   8. Provide an electronic or digital interface for flow rate indication at central workstation compatible with DDC system, as described in Section 230923 "Direct Digital Control (DDC) System for HVAC." Low-voltage signal must be capable of transmitting 1000 feet

C. Water Meter, Turbine Type, Flanged:
   1. AWWA C701, turbine-type, totalization meter.
   2. Body: Bronze.
   3. Minimum Working-Pressure Rating: 150 psig.
   4. Maximum Pressure Loss at Design Flow: 3 psig.
   5. Registration: Gallonsor cubic feet.
   6. End Connections: Flanged.
   7. Controls: Flow-control switch with normally open contacts, rated for maximum 10 A, 250-V ac, that will momentarily close at adjustable increments of total flow.
   8. Provide and electronic or digital interface for flow rate indication at central workstation compatible with DDC system, as described in Section 230923 "Direct Digital Control (DDC) System for HVAC." Low-voltage signal must be capable of transmitting 1000 feet

D. Inhibitor Injection Timers:
   1. Microprocessor-based controller with digital display in NEMA 250, Type 12 enclosure with gasketed and lockable door
   2. Programmable timers with infinite adjustment over full range, mounted in cabinet with hand-off-auto switches and status lights.
   3. Test switch.
   4. Hand-off-auto switch for chemical pump.
   5. Illuminated legend to indicate feed when pump is activated.
   6. Programmable lockout timer with indicator light. Lockout timer to deactivate the pump and activate alarm circuits.
   7. Digital display makeup totalizer to measure amount of makeup and bleed-off water from two water meter inputs.

E. pH Controller:
   1. Microprocessor-based controller, 1 percent accuracy in a range from zero to 14 units. Incorporate solid-state integrated circuits and digital display in NEMA 250, Type 12 enclosure with gasketed and lockable door
   2. Digital display and touch pad for input.

3. Sensor probe adaptable to sample stream manifold.
4. High, low, and normal pH indication.
5. High or low-pH-alarm-light trip points, field adjustable; with silence switch.
6. Hand-off-auto switch for acid pump.
7. Internal adjustable hysteresis or deadband.

F. TDS Controller:
1. Microprocessor-based controller, 1 percent accuracy in a range from zero to 5000 micromhos. Incorporate solid-state integrated circuits and digital display in NEMA 250, Type 12 enclosure with gasketed and lockable door
2. Digital display and touch pad for input.
3. Sensor probe adaptable to sample stream manifold.
4. High, low, and normal conductance indication.
5. High- or low-conductance-alarm-light trip points, field adjustable; with silence switch.
6. Hand-off-auto switch for solenoid bleed-off valve.
7. Bleed-off valve activated indication.
8. Internal adjustable hysteresis or deadband.
9. Bleed Valves:
   a. Cooling Systems: Forged-brass body, globe pattern, general-purpose solenoid with continuous-duty coil, or motorized valve.
   b. Steam Boilers: Motorized ball valve, steel body, and TFE seats and seals.

G. TSS Controller:
1. Microprocessor-based controller, 1 percent accuracy in a range from 0.001 mg/L to 50 g/L. Incorporate solid-state integrated circuits and digital display in NEMA 250, Type 4X enclosure.
2. Digital display and touch pad for input.
3. Sensor probe adaptable to sample stream manifold.
4. High- or low-value-alarm-light trip points, field adjustable; with silence switch.
5. Hand-off-auto switch for solenoid bleed-off valve.
6. Bleed-off valve activated indication.
7. Internal adjustable hysteresis or deadband.

H. Biocide Feeder Timer:
1. Microprocessor-based controller with digital display in NEMA 250, Type 12 enclosure with gasketed and lockable door
2. 24-hour timer with 14-day skip feature to permit activation any hour of day.
3. Precision, solid-state, bleed-off lockout timer and clock-controlled biocide pump timer. Prebleed and bleed lockout timers.
4. Solid-state alternator to enable use of two formulations.
5. 24-hour display of time of day.
6. 14-day display of day of week.
7. Battery backup, so clock is not disturbed by power outages.
8. Hand-off-auto switches for biocide pumps.
9. Biocide A and Biocide B pump running indication.

I. Chemical Solution Tanks:
1. Chemical-resistant reservoirs fabricated from high-density opaque polyethylene with minimum 110 percent containment vessel.
2. Molded cover with recess for mounting pump.
3. Capacity: 120 gal.

J. Chemical Solution Injection Pumps:
1. Self-priming, positive displacement; rated for intended chemical with minimum 25 percent safety factor for design pressure and temperature.
2. Adjustable flow rate.
3. Metal and thermoplastic construction.
4. Built-in relief valve.

K. Chemical Solution Tubing: Polyethylene tubing with compression fittings and joints, except ASTM A269/A269M, Type 304 stainless steel for steam boiler injection assemblies.

L. Injection Assembly:
   1. Quill: Minimum NPS 1/2 insertion length sufficient to discharge into at least 25 percent of pipe diameter.
   2. Ball Valve: Two-piece stainless steel, as described in "Stainless Steel Pipes and Fittings" Article; selected to fit quill.
   3. Packing Gland: Mechanical seal on quill of sufficient length to allow quill removal during system operation.
   4. Assembly Pressure/Temperature Rating: Minimum 600 psigat 200 deg F.

2.5 OZONE-GENERATOR BIOCIDE EQUIPMENT

A. Corona discharge generator with stainless steel generating cells and transformer housed in a NEMA 250, Type 4 enclosure. Assembly shall be suitable for continuous duty. Provide site glasses to verify proper operation of generator.
B. Water-cooled generators shall be provided with cooling water at maximum 70 deg F and 35 psig.
C. Generator vessels exposed to system pressure shall be constructed in accordance with 2017 ASME Boiler and Pressure Vessel Code and be equipped with pressure-relief valve.
D. External air compressor or induced airflow through a cleanable prefilter supplies concentrated oxygen through a molecular sieve, with minus 62 deg Fdew point to avoid the formation of nitric acid.
E. Microprocessor-based control with software in EEPROM, surge protection, high-temperature cutout, and operational status lights
F. Ozone Contactors:
   1. Bubble diffusers.
   2. Induction injection nozzle.
   3. Injectors with static mixers.
G. Ozone Detector and Alarm Devices:
   1. Detector:
      a. Sensor: Metal dioxide semiconductor.
      b. Concentration Range: 0 to 10 ppm.
      c. Accuracy: Plus or minus 0.01 ppm.
      d. Sensitivity: 0.01 ppm.
      e. Response Time: Maximum 10 seconds.
      f. Operating Temperature: 50 to 100 deg F.
      g. Relative Humidity: 15 to 90 percent, noncondensing over the operating temperature range.
   2. Horns:
      a. Electric-vibrating-polarized type.
      b. 24-V dc, with provision for housing the operating mechanism behind a grille.
      c. Horns shall produce a sound-pressure level of 90 dBA, measured 10 feet from the horn.
      d. Electrical Components, Devices, and Accessories: Listed and labeled as defined in NFPA 70, by a qualified testing agency, and marked for intended location and application.
   3. Visible Alarm Devices:
      a. Xenon strobe lights listed in UL 1971, with clear or nominal white polycarbonate lens mounted on an aluminum faceplate.
      b. Rated Light Output: 110 candela.
      c. Strobe Leads: Factory connected to screw terminals.
H. Self-Contained Breathing Apparatus: Open-circuit, pressure-demand compressed air includes completely assembled, portable, self-contained devices designed for hazardous breathing environment application.
   1. Face Piece: EPDM or silicone rubber construction material, one-size-fits-all with double-sealing edge, stainless steel speaking diaphragm and lens retainer, five adjustable straps to hold face piece to head (two straps on each side and one on top), exhalation valve in mask, close-fitting nose piece to ensure no CO(2) buildup, and perspiration drain to avoid skin irritation and to prevent eyepiece, spectacle, and lens fogging.
   2. Backplate: Orthopedically designed of aluminum.
   3. Harness and Carrier Assembly: Large triangular back pad, backplate, and adjustable waist and shoulder straps; modular in design, detachable components, and easy to clean and maintain.

Shoulder straps are padded with flame-resistant material, reinforced with stainless steel cable, and attached with T-nuts, washers, and screws.

4. Air Cylinder: 60-minute, low-pressure, air-supply-loaded aluminum cylinders fitted with quick-fill assembly for refilling and air transfer.
5. Wall-Mounting Cabinet: Leakproof, corrosion-resistant, clear, plastic case.
6. Tested and Certified: By the National Institute for Occupational Safety and Health and by the Mine Safety and Health Administration, in accordance with 42 CFR 84, Subpart H.

2.6 STAINLESS STEEL PIPES AND FITTINGS

A. Stainless Steel Tubing: Comply with ASTM A269/A269M, Type 316.
B. Stainless Steel Fittings: Comply with ASTM A815/A815M, Type 316, Grade WP-S.
C. Two-Piece, Full-Port, Stainless Steel Ball Valves: ASTM A351/A351M, Type 316 stainless steel body; ASTM A276/A276M, Type 316 stainless steel stem and vented ball, carbon-filled TFE seats, threaded body design with adjustable stem packing, threaded ends, and 250-psig steam working pressure and 600-psig cold working pressure ratings.
D. Three-Piece, Full-Port, Stainless Steel Ball Valves: ASTM A351/A351M, Type 316 stainless steel body; ASTM A276/A276M, Type 316 stainless steel stem and vented ball, threaded body design with adjustable stem packing, threaded ends, and 150-psig steam working pressure and 600-psig cold working pressure rating.

2.7 UV BIOCIDE EQUIPMENT

A. Target Irradiation: Minimum 5,000 microWxs/sq. cm.
B. Light Source Vessels:
   1. ASTM A666, Type 304 stainless steel.
   2. Construct for minimum 150 psigat 150 deg Fin accordance with ASME Boiler and Pressure Vessel Code, and equipped with pressure-relief valve.
   3. Light Source Sleeve: Quartz, with EPDM O-ring seals.
   4. Light Source: Replaceable UV lamp producing minimum target irradiation of 254-nm wavelength light.
C. Controls: Interlock with pumps to operate when water is circulating.

2.8 CHEMICAL-TREATMENT TEST EQUIPMENT

A. Test Kit: Manufacturer-recommended equipment and chemicals in a wall-mounted cabinet for testing pH, TSS, inhibitor, chloride, alkalinity, and hardness; sulfite and testable polymer tests for high-pressure boilers; and oxidizing biocide test for open cooling systems.
B. Sample Cooler:
   1. Tube: Sample.
      a. Size: NPS 1/4tubing.
      b. Material: ASTM A666, Type 316 stainless steel.
      c. Pressure Rating: Minimum 2000 psig.
      d. Temperature Rating: Minimum 850 deg F.
   2. Shell: Cooling water.
      a. Material: ASTM A666, Type 304 stainless steel.
      b. Pressure Rating: Minimum 250 psig
      c. Temperature Rating: Minimum 450 deg F.
   3. Capacities and Characteristics:
      a. Tube: Sample.
         1) Flow Rate: 0.25 gpm.
         2) Entering Temperature: 400 deg F.
         3) Leaving Temperature: 88 deg F.
         4) Pressure Loss: 6.5 psig.
      b. Shell: Cooling water.
         1) Flow Rate: 3 gpm.
         2) Entering Temperature: 70 deg F

3) Pressure Loss: 1.0 psig.

C. Corrosion Test-Coupon Assembly: Constructed of corrosive-resistant material, complete with piping, valves, and mild steel and copper coupons. Locate copper coupon downstream from mild steel coupon in the test-coupon assembly.
   1. Two-station rack for closed-loop systems.
   2. Four-station rack for open-loop systems.

2.9 CHEMICALS

A. Chemicals shall be as recommended by water-treatment system manufacturer that are compatible with piping system components and connected equipment and that can attain water quality specified in "Performance Requirements" Article.

B. Chemicals for direct steam injection humidification and for steam used in direct contact with food to be FDA approved and safe for these uses.

C. Water Softener Chemicals:
   1. Mineral: High-capacity, sulfonated-polystyrene ion-exchange resin that is stable over entire pH range, with good resistance to bead fracture from attrition or shock.
   2. Salt for Brine Tanks: High-purity sodium chloride, free of dirt and foreign material. Rock and granulated forms are unacceptable.

2.10 INHIBITED ETHYLENE GLYCOL AND PROPYLENE GLYCOL

A. Inhibited Ethylene Glycol:
   1. Ethylene glycol with inhibitor additive, to provide freeze protection for heat-transfer fluid and corrosion protection for carbon-steel, brass, copper, stainless steel, and cast-iron piping and fittings.
   2. Inhibitor creates a passive layer on all surfaces that contact ethylene glycol to prevent corrosion by stabilizing fluid pH, to compensate for acids formed from glycol degradation.
   3. Operating Temperature Range: Minus 60 deg F to 250 deg F.
   4. Concentrated inhibited ethylene glycol is to be 95.5 percent ethylene glycol by weight and 4.5 percent performance additives.
   5. Concentrated inhibited ethylene glycol is mixed with water in proper proportion specified by the manufacturer to provide freeze protection to minus 20 deg F. Premixed heat-transfer fluid may be used, or glycol/water mixture may be prepared at time of installation. Use only deionized water for mixing.
   6. Provide only ethylene glycol that is specifically blended for HVAC application. Automotive-type antifreeze is unacceptable.

B. Inhibited Propylene Glycol:
   1. Propylene glycol with inhibitor additive, to provide freeze protection for heat-transfer fluid and corrosion protection for carbon-steel, brass, copper, stainless steel, and cast-iron piping and fittings.
   2. Inhibitor creates a passive layer on all surfaces that contact propylene glycol to prevent corrosion and stabilizes fluid pH, to compensate for acids formed from glycol degradation.
   3. Operating Temperature Range: Minus 50 deg Fto 250 deg F
   4. Concentrated inhibited propylene glycol is to be 95.5 percent propylene glycol by weight and 4.5 percent performance additives.
   5. Concentrated inhibited propylene glycol is mixed with water in proper proportion specified by the manufacturer to provide freeze protection to minus 20 deg F Premixed heat-transfer fluid may be used, or glycol/water mixture may be prepared at the time of installation. Use only deionized water for mixing.
   6. Provide only propylene glycol that is specifically blended for HVAC application. Automotive-type antifreeze is unacceptable.

2.11 HVAC MAKEUP-WATER SOFTENER

A. Description: Twin mineral tanks and one brine tank, factory mounted on skid.

B. Electrical Components, Devices, and Accessories: Listed and labeled as defined in NFPA 70, by a qualified testing agency, and marked for intended location and application.

C. Fabricate supports and attachments to tanks with reinforcement strong enough to resist tank movement during seismic event, when tank supports are anchored to building structure as recommended in writing by manufacturer.

D. Mineral Tanks:

1. Fabricate and label steel filter tanks to comply with ASME Boiler and Pressure Vessel Code: Section VIII, Division 1.
2. Fabricate and label fiber-reinforced plastic filter tanks to comply with ASME Boiler and Pressure Vessel Code: Section X, if indicated.
3. Pressure Rating: 150 psig minimum.
4. Wetted Components: Suitable for water temperatures from 40 to at least 100 deg F
5. Freeboard: 50 percent minimum, for backwash expansion above the normal resin bed level.
6. Support Legs or Skirt: Constructed of structural steel, welded or bonded to tank before testing and labeling.
7. Finish: Hot-dip galvanized on exterior and interior of tank after fabrication.
8. Upper Distribution System: Single-point type, fabricated from galvanized-steel pipe and fittings.
9. Lower Distribution System: Hub and radial-arm or header-lateral type; fabricated from PVC pipe and fittings with individual, fine-slotted, nonclogging polyethylene strainers; arranged for even-flow distribution through resin bed.

E. Controls: Automatic; factory mounted on mineral tanks and factory wired.

1. Adjustable duration of regeneration steps.
2. Push-button start and complete manual operation override.
3. Pointer on pilot-control valve shall indicate cycle of operation.
4. Means of manual operation of pilot-control valve if power fails.
5. Main Operating Valves: Industrial, automatic, multiport, diaphragm type with the following features:
   a. Slow opening and closing, nonslam operation.
   b. Diaphragm guiding on full perimeter from fully open to fully closed.
   c. Isolated dissimilar metals within valve.
   d. Self-adjusting, internal, automatic brine injector that draws brine and rinses at constant rate independent of pressure.
   e. Float-operated brine valve to automatically measure the correct amount of brine to the softener, and refill with fresh water.
   f. Sampling cocks for soft water.
6. Flow Control: Automatic control of backwash and flush rates over variations in operating pressures that do not require field adjustments. Equip mineral tanks with automatic-reset-head water meter that electrically activates cycle controller to initiate regeneration at preset total in gallons and that automatically resets after regeneration to preset total in gallons for next service run. Include alternator to regenerate one mineral tank with the other in service.

F. Brine Tank: Combination measuring and wet-salt storing system.

1. Tank and Cover Material: Fiberglass a minimum of 3/16 inch thick; or molded polyethylene a minimum of 3/8 inch thick.
2. Brine Valve: Float operated and plastic fitted for automatic control of brine withdrawn and freshwater refill.
3. Size: Large enough for at least four regenerations at full salting.

G. Factory-Installed Accessories:

1. Piping, valves, tubing, and drains.
2. Sampling cocks.
3. Main-operating-valve position indicators.
4. Water meters.

H. Water Test Kit: Include in wall-mounted enclosure for water softener.

2.12 FILTRATION EQUIPMENT

A. Multimedia Filters:

1. Description: Factory-fabricated and -tested, simplex, multimedia filter system, consisting of filter tank, media, strainer, circulating pump, piping, and controls for removing particles from water.

a. Filter Tank: Corrosion resistant with distribution system and media.

2. Electrical Components, Devices, and Accessories: Listed and labeled as defined in NFPA 70, by a qualified testing agency, and marked for intended location and application.
   a. Fabricate and label steel filter tanks to comply with ASME Boiler and Pressure Vessel Code: Section VIII, Division 1.
   b. Fabricate and label FRP filter tanks to comply with ASME Boiler and Pressure Vessel Code: Section X, if indicated.
   c. Pipe Connections NPS 2 (DN 50) and Smaller: Threaded in accordance with ASME B1.20.1.
   d. Steel Tank Pipe Connections NPS 2-1/2 (DN 65) and Larger: Steel, Class 150 flanges in accordance with ASME B16.5 or grooved in accordance with AWWA C606.
   e. FRP Tank Pipe Connections NPS 2-1/2 (DN 65) and Larger: Type A, integral; Designation E, 125-psig pressure category flanges of grade same as tank material, in accordance with ASTM D5421.
   f. Motorized Valves: Flanged or grooved-end, ductile-iron butterfly type with EPDM valve seat and stem seal; with ASTM B148 aluminum bronze disc.
   g. Strainer: Basket type mounted on pump suction.
   h. Piping:
      1) ASTM A53/A53M; Type S, F, or E; Grade B; Schedule 40 black steel, with flanged, grooved, or threaded joints and malleable, steel welding or ductile-iron fittings.
      2) ASTM B88, Type Lcopper water tube, copper-alloy solder-joint fittings, and brazed, flanged, or grooved joints.
   i. Safety Valves: Automatic pressure relief.
   j. Circulating Pump: Overhung impeller, close coupled, single stage, end suction, centrifugal. Comply with UL 778 and with HI 1.1-1.2 and HI 1.3.
      1) Casing: Radially split, cast iron.
      2) Pressure Rating: 150 psigminimum.
      3) Impeller: ASTM B584 cast bronze; statically and dynamically balanced, closed, and keyed to shaft.
      4) Shaft and Shaft Sleeve: Steel shaft, with copper-alloy shaft sleeve.
      5) Seal: Mechanical.
      6) Motor: Open, dripproof motor supported on the pump-bearing frame. General requirements for motors are specified in Section 230500 "Common Work Results for HVAC."
   k. Controls: Automatic control of circulating pump and tank backwash; factory wired for single electrical connection.
      1) Panel: NEMA 250, Type 4 enclosure with time clock and pressure gages.
      2) Pump: Automatic and manual switching; manual switch position bypasses safeties and controls.
      3) Backwash: Automatic; with time clock and differential pressure switch.
      4) Backwash Valve: Tank mounted with valves interlocked to single actuator.
   l. Support: Skid mounting
3. Self-Cleaning Strainers:
4. Description: Factory-fabricated and -tested, ASTM A126, Class B, cast-iron or steel, self-cleaning strainer system of tank, strainer, backwash arm or cleaning spiral, drive and motor, piping, and controls for removing particles from water.
   a. Fabricate and label ASTM A126, Class B, cast-iron or steel strainer tanks to comply with ASME Boiler and Pressure Vessel Code: Section VIII, Division 1.
   b. Pipe Connections:
      1) NPS 2 (DN 50) and Smaller: Threaded in accordance with ASME B1.20.1.
      2) NPS 2-1/2 (DN 65) and Larger: Steel, Class 150 flanges in accordance with ASME B16.5 or grooved in accordance with AWWA C606.
5. Motorized Valves: Flanged or grooved-end, ductile-iron angle type with EPDM valve seat and stem seal; with ASTM B148 aluminum bronze disc.
6. Strainer: ASTM A666, Type 316 stainless steel.
7. Piping: ASTM A53/A53M; Type S, F, or E; Grade B; Schedule 40 black steel, with flanged, grooved, or threaded joints and malleable, steel welding or ductile-iron fittings.

8. Safety Valves: Automatic pressure relief.
9. Backwash Arm Drive:
    a. Drive Casing: Cast iron.
    b. Worm Gears: Immersed in oil.
    c. Motor: Open, dripproof motor supported on the strainer-bearing frame. General requirements for motors are specified in Section 230500 "Common Work Results for HVAC."
10. Controls: Automatic control of backwash; factory wired for single electrical connection.
    a. Panel: NEMA 250, Type 4 enclosure with time clock and pressure gages.
    b. Backwash Arm Drive: Automatic and manual switching; manual switch position bypasses safeties and controls.
    c. Backwash: Automatic; with time clock and differential pressure switch.
    d. Backwash Valve: Electric actuator.
11. Support: Skid mounting
12. If more than one strainer is required on Project, delete "Capacities and Characteristics" Subparagraph below and schedule strainers on Drawings.

B. Bag- or Cartridge-Type Filters:
1. Description: Floor-mounted housing with filter cartridges for removing particles from water.
    a. Housing: Corrosion resistant; designed to separate inlet from outlet and to direct inlet through cartridge-type water filter; with bag support and base, feet, or skirt.
        1) Pipe Connections NPS 2 (DN 50) and Smaller: Threaded in accordance with ASME B1.20.1.
        2) Steel Housing Pipe Connections NPS 2-1/2 (DN 65) and Larger: Steel, Class 150 flanges in accordance with ASME B16.5 or grooved in accordance with AWWA C606.
        3) Plastic Housing Pipe Connections NPS 2-1/2 (DN 65) and Larger: 150-psig plastic flanges.
    b. Bag or Cartridge, Replaceable: Of shape to fit housing.

C. Centrifugal Separators:
1. Description: Simplex separator housing, with baffles and chambers for removing particles from water by centrifugal action and gravity.
2. Housing: With manufacturer's proprietary system of baffles and chambers.
    a. Construction: Fabricate and label steel separator housing to comply with ASME Boiler and Pressure Vessel Code: Section VIII, Division 1.
    b. Inlet: Designed with tangential entry to produce centrifugal flow of feedwater.
    c. Vortex Chamber: Designed for downward vortex flow and gravity separation of particles.
    d. Collection Chamber: Designed to hold separated particles.
    e. Outlet: Near top of unit.
    f. Purge: At bottom of collection chamber.
    g. Pipe Connections NPS 2 (DN 50) and Smaller: Threaded in accordance with ASME B1.20.1.
    h. Pipe Connections NPS 2-1/2 (DN 65) and Larger: Steel, Class 150 flanges in accordance with ASME B16.5 or grooved in accordance with AWWA C606. Provide stainless steel flanges if tank is stainless steel.
3. Motorized Purge Valve: Gate or plug pattern valve.
    a. Motorized Valves: Butterfly-type, flanged or grooved-end, ductile-iron body, with EPDM valve seat and stem seal; with ASTM B148 aluminum bronze disc.
    b. Electrical Components, Devices, and Accessories: Listed and labeled as defined in NFPA 70, by a qualified testing agency, and marked for intended location and application.
4. Strainer: Stainless steel basket type mounted on pump suction.
5. Piping, Steel: ASTM A53/A53M; Type S, F, or E; Grade B; Schedule 40 black steel, with flanged, grooved, or threaded joints and malleable, steel welding or ductile-iron fittings.
6. Piping, Copper: ASTM B88, Type L copper water tube, copper-alloy solder-joint fittings, and brazed, flanged, or grooved joints.
7. Circulating Pump: Overhung impeller, close coupled, single stage, end suction, centrifugal. Comply with UL 778 and with HI 1.1-1.2 and HI 1.3.

a. Casing: Radially split, cast iron.
b. Pressure Rating: 150 psigminimum.
c. Impeller: ASTM B584 cast bronze; statically and dynamically balanced, closed, and keyed to shaft.
d. Shaft and Shaft Sleeve: Steel shaft with copper-alloy shaft sleeve.
e. Seal: Mechanical.
f. Motor: Open, dripproof motor supported on the pump-bearing frame. General requirements for motors are specified in Section 230500 "Common Work Results for HVAC."
g. Electrical Components, Devices, and Accessories: Listed and labeled as defined in NFPA 70, by a qualified testing agency, and marked for intended location and application.

8. Controls: Automatic control of circulating pump and separator purge; factory wired for single electrical connection.
   a. Panel: NEMA 250, Type 4 enclosure.
   b. Pump: Automatic and manual switching; manual switch position bypasses safeties and controls.
   c. Separator Purge: Automatic and manual.
   d. TSS Controller Interlock: Open separator purge valve with bleed-off control.
9. Support: Skid mountingIf more than one separator is required on Project, delete "Capacities and Characteristics" Subparagraph below and schedule separators on Drawings.

PART 3 EXECUTION

3.1 WATER ANALYSIS

A. Perform an analysis of supply water to determine quality of water available at Project site.

3.2 INSTALLATION

A. Install chemical-application equipment on concrete bases, level and plumb. Maintain manufacturer's recommended clearances. Arrange units, so controls and devices that require servicing are accessible. Anchor chemical tanks and floor-mounting accessories to substrate. Install all chemical application equipment within a spill-containment area without floor drains.
B. Install seismic restraints for equipment and floor-mounting accessories, and anchor to building structure. See Section 230548 "Vibration and Seismic Controls for HVAC" for seismic restraints.
C. Install water-testing equipment on wall near water-chemical-application equipment.
D. Install interconnecting control wiring for chemical-treatment controls and sensors.
E. Mount sensors and injectors in piping circuits.
F. Bypass Feeders: Install in closed hydronic systems, including hot-water heating and chilled water, and equip with the following:
   1. Install bypass feeder in a bypass circuit around circulating pumps unless otherwise indicated on Drawings.
   2. Install water meter in makeup-water supply.
   3. Install test-coupon assembly in bypass circuit around circulating pumps unless otherwise indicated on Drawings.
   4. Install a gate or full-port ball isolation valves on inlet, outlet, and drain below feeder inlet.
   5. Install a swing check on inlet after the isolation valve.
G. Install automatic fluid make-up equipment for glycol water system and include the following:
   1. Chemical solution tanks.
   2. Chemical solution injection pumps.
   3. Water meter in makeup supply to system.
   4. Pressure switch to operate injection pump as necessary to maintain glycol system pressure.
H. Install automatic chemical-feed equipment for steam boiler and steam condensate systems and include the following:
   1. Install makeup-water softener.
   2. Install water meter in makeup-water supply.

3. Install inhibitor injection pumps and solution tanks with injection-timer-sensing contacts in water meter.
    a. Pumps shall operate for timed interval when contacts close at water meter in makeup-water supply connection.
4. Install test equipment and furnish test-kit to Owner.
5. Install TDS controller with sensor and bleed valves.
    a. Bleed valves to cycle, to maintain maximum TDS concentration.
6. Install TSS controller with sensor and bleed valves.
    a. Bleed valves to cycle, to maintain maximum TSS concentration.
7. Install inhibitor injection timer with injection pumps and solution tanks.
    a. Pumps shall operate for timed interval on contact closure at water meter in makeup-water supply connection. Injection pump shall discharge into main steam supply header.

I. Install automatic chemical-feed equipment for open condenser water and include the following:
1. Install water meter in makeup-water supply.
2. Install inhibitor injection pumps and solution tanks with injection-timer-sensing contacts in water meter.
    a. Pumps shall operate for timed interval on contact closure at water meter in makeup-water supply connection. Injection pump shall discharge into boiler feedwater tank or feedwater supply connection at boiler.
3. Install test equipment, and provide test-kit to Owner. Install test-coupon assembly in bypass circuit around circulating pumps unless otherwise indicated on Drawings.
4. Install TDS controller with sensor and bleed valves.
    a. Bleed valves to cycle, to maintain maximum TDS concentration.
5. Install TSS controller with sensor and bleed valves.
    a. Bleed valves to cycle, to maintain maximum TSS concentration.
6. Install pH sensor and controller with injection pumps and solution tanks.
    a. Injector pumps shall operate to maintain required pH.
7. Install biocide feeder alternating timer with two sets of injection pumps and solution tanks.
    a. Injection pumps shall operate to feed biocide on an alternating basis.
8. Install ozone generator with diffusers in condenser-water piping.
    a. Ozone generator shall operate continuously with condenser-water flow.
9. Install UV-irradiation lamps in condenser-water piping.
    a. UV lights shall operate continuously with condenser-water flow.

3.3 INSTALLATION OF OZONE GENERATOR

A. Install ozone generator and equipment on concrete bases level and plumb. Maintain manufacturer's recommended clearances. Arrange units, so controls and devices that require servicing are accessible. Anchor mineral and brine tanks and floor-mounting accessories to substrate.
B. Install seismic restraints for equipment and floor-mounting accessories, and anchor to building structure. See Section 230548 "Vibration and Seismic Controls for HVAC" for seismic restraints.
C. Pipe ozone from ozone generator to condenser water with stainless steel pipe and fittings with welded joints.
D. Install three-piece, stainless steel ball valve in ozone supply to condenser water.
E. Pipe cooling water to ozone generator and to air-gap drain fitting with stainless steel pipe and fittings with welded joints where enclosed in ozone-generator room.
F. Install three-piece, stainless steel ball valve in cooling water supply to ozone generator.
G. Mounting supports for ozone generator shall be ASTM A666, Type 316 stainless steel.
H. Mount breathing apparatus outside ozone-generator room.
I. Mount and install ozone detector, warning lights, and audible alarm inside ozone-generator room. Mount another set of warning lights and audible alarm just outside the main entrance to ozone-generator room.

3.4 INSTALLATION OF UV-IRRADIATION UNIT

A. Install UV-irradiation units on concrete bases level and plumb. Maintain manufacturer's recommended clearances. Arrange units, so controls and devices that require servicing are accessible. Anchor mineral and brine tanks and floor-mounting accessories to substrate.

3.5 INSTALLATION OF WATER SOFTENER

A. Install water softener equipment on concrete bases level and plumb. Maintain manufacturer's recommended clearances. Arrange units, so controls and devices that require servicing are accessible. Anchor mineral and brine tanks and floor-mounting accessories to substrate.
B. Install brine lines and fittings furnished by equipment manufacturer but not factory installed.
C. Prepare mineral-tank distribution system and underbed for minerals, and place specified mineral into mineral tanks.
D. Install water-testing sets on wall adjacent to water softeners.

3.6 INSTALLATION OF RO UNIT

A. Install RO unit and storage tank on concrete bases level and plumb. Maintain manufacturer's recommended clearances. Arrange units, so controls and devices that require servicing are accessible. Anchor RO unit and storage tank with pumps to substrate.
B. Install interconnecting piping and controls furnished by equipment manufacturer but not factory installed.
C. Install water-testing sets on wall adjacent to RO unit.

3.7 PIPING CONNECTIONS

A. Piping installation requirements are specified in other Sections. Drawings indicate general arrangement of piping, fittings, and specialties.
B. Where installing piping adjacent to equipment, allow space for service and maintenance.
C. Make piping connections between HVAC water-treatment equipment and dissimilar-metal piping with dielectric fittings. Dielectric fittings are specified in Section 232113 "Hydronic Piping."
D. Install shutoff valves on HVAC water-treatment equipment inlet and outlet. Metal general-duty valves are specified in Section 230523 "General-Duty Valves for HVAC Piping."
E. See Section 221119 "Domestic Water Piping Specialties" for backflow preventers required in makeup-water connections to potable-water systems.

3.8 ELECTRICAL CONNECTIONS

A. Confirm applicable electrical requirements in electrical Sections for connecting electrical equipment.
B. Ground equipment in accordance with Section 260526 "Grounding and Bonding for Electrical Systems."
C. Connect wiring in accordance with Section 260519 "Low-Voltage Electrical Power Conductors and Cables."

3.9 FIELD QUALITY CONTROL

A. Testing Agency:
   1. Owner will engage a qualified testing agency to perform tests and inspections.
   2. Engage a qualified testing agency to perform tests and inspections.
B. Manufacturer's Field Service: Engage a factory-authorized service representative to test and inspect components, assemblies, and equipment installations, including connections.
C. Perform tests and inspections with the assistance of a factory-authorized service representative.
D. Tests and Inspections:
   1. Inspect field-assembled components and equipment installation, including piping and electrical connections.
   2. Inspect piping and equipment to determine that systems and equipment have been cleaned, flushed, and filled with water, and are fully operational before introducing chemicals for water-treatment system.
   3. Place HVAC water-treatment system into operation, and calibrate controls during the preliminary phase of HVAC system's startup procedures.
   4. Do not enclose, cover, or put piping into operation until it is tested and satisfactory test results are achieved.

5. Test for leaks and defects. If testing is performed in segments, submit separate report for each test, complete with diagram of portion of piping tested.
6. Leave uncovered and unconcealed new, altered, extended, and replaced water piping until it has been tested and approved. Expose work that has been covered or concealed before it has been tested and approved.
7. Cap and subject piping to static water pressure of 50 psig above operating pressure, without exceeding pressure rating of piping system materials. Isolate test source and allow test pressure to stand for four hours. Leaks and loss in test pressure constitute defects.
8. Repair leaks and defects with new materials, and retest piping until no leaks exist.

E. Equipment will be considered defective if it does not pass tests and inspections.

F. Prepare test and inspection reports.

G. Sample boiler water at one-week intervals after boiler startup for a period of five weeks, and prepare test report, advising Owner of changes necessary to adhere to "Performance Requirements" Article for each required characteristic. Sample boiler water at eight-week intervals following the testing noted above to show that automatic chemical-feed systems are maintaining water quality within performance requirements specified in this Section.

H. At eight-week intervals following Substantial Completion, perform separate water analyses on hydronic systems to show that automatic chemical-feed systems are maintaining water quality within performance requirements specified in this Section. Submit written reports of water analysis, advising Owner of changes necessary to adhere to "Performance Requirements" Article.

I. Comply with ASTM D3370 and with the following standards:
1. Silica: ASTM D859.
2. Steam System: ASTM D1066.
3. Acidity and Alkalinity: ASTM D1067.
4. Iron: ASTM D1068.
5. Water Hardness: ASTM D1126.

3.10 MAINTENANCE SERVICE

A. Scope of Maintenance Service: Provide chemicals and service program to maintain water conditions required above, to inhibit corrosion, scale formation, and biological growth for cooling, chilled-water piping, heating, hot-water piping and equipment. Services and chemicals shall be provided for a period of one year from date of Substantial Completion and shall include the following:
1. Initial water analysis and HVAC water-treatment recommendations.
2. Startup assistance for Contractor to flush the systems, clean with detergents, and initially fill systems with required chemical treatment prior to operation.
3. Periodic field service and consultation.
4. Customer report charts and log sheets.
5. Laboratory technical analysis.
6. Analyses and reports of all chemical items concerning safety and compliance with government regulations.

3.11 DEMONSTRATION

A. Engage a factory-authorized service representative to train Owner's maintenance personnel to adjust, operate, and maintain HVAC water-treatment systems and equipment.

B. Training: Provide a "how-to-use" self-contained breathing apparatus video that details exact operating procedures of equipment. When training is complete, turn over video to Owner for future use.

END OF SECTION 232500

SECTION 233113 - METAL DUCTS

PART 1 GENERAL

1.1 SUMMARY

A. Section Includes:
1. Single-wall rectangular ducts and fittings.
2. Single-wall round ducts and fittings.
3. Sheet metal materials.
4. Sealants and gaskets.
5. Hangers and supports.
6. Seismic-restraint devices.

B. Related Sections:
1. Section 230593 "Testing, Adjusting, and Balancing for HVAC" for testing, adjusting, and balancing requirements for metal ducts.
2. Section 233300 "Air Duct Accessories" for dampers, sound-control devices, duct-mounting access doors and panels, turning vanes, and flexible ducts.

1.2 PERFORMANCE REQUIREMENTS

A. Structural Performance: Duct hangers and supports and seismic restraints shall withstand the effects of gravity and seismic loads and stresses within limits and under conditions described in SMACNA's "HVAC Duct Construction Standards - Metal and Flexible" and ASCE/SEI 7.
1. Seismic Hazard Level C: Seismic force to weight ratio, 0.15.

B. Airstream Surfaces: Surfaces in contact with the airstream shall comply with requirements in ASHRAE 62.1.

1.3 ACTION SUBMITTALS

A. Product Data: For each type of the following products:
1. Adhesives.
2. Sealants and gaskets.
3. Seismic-restraint devices.

B. LEED Submittals:
1. Product Data for Prerequisite IEQ 1: Documentation indicating that duct systems comply with ASHRAE 62.1, Section 5 - "Systems and Equipment."
2. Product Data for Prerequisite EA 2: Documentation indicating that duct systems comply with ASHRAE/IESNA 90.1, Section 6.4.4 - "HVAC System Construction and Insulation."
3. Product Data for Credit IEQ 4.1: For adhesives and sealants, documentation including printed statement of VOC content.

1.4 INFORMATIONAL SUBMITTALS

A. Coordination Drawings: Plans, drawn to scale, on which the following items are shown and coordinated with each other, using input from installers of the items involved:
1. Duct installation in congested spaces, indicating coordination with general construction, building components, and other building services. Indicate proposed changes to duct layout.
2. Suspended ceiling components.
3. Structural members to which duct will be attached.
4. Size and location of initial access modules for acoustical tile.
5. Penetrations of smoke barriers and fire-rated construction.
6. Items penetrating finished ceiling including the following:
a. Lighting fixtures.
b. Air outlets and inlets.

c. Speakers.
d. Sprinklers.
e. Access panels.
f. Perimeter moldings.

B. Welding certificates.
C. Field quality-control reports.
D. Welding Qualifications: Qualify procedures and personnel according to the following:
1. AWS D1.1/D1.1M, "Structural Welding Code - Steel," for hangers and supports.
2. AWS D1.2/D1.2M, "Structural Welding Code - Aluminum," for aluminum supports.
3. AWS D9.1M/D9.1, "Sheet Metal Welding Code," for duct joint and seam welding.
E. ASHRAE Compliance: Applicable requirements in ASHRAE 62.1, Section 5 - "Systems and Equipment" and Section 7 - "Construction and System Start-up."
F. ASHRAE/IESNA Compliance: Applicable requirements in ASHRAE/IESNA 90.1, Section 6.4.4 - "HVAC System Construction and Insulation."

PART 2 PRODUCTS

2.1 SINGLE-WALL RECTANGULAR DUCTS AND FITTINGS

A. General Fabrication Requirements: Comply with SMACNA's "HVAC Duct Construction Standards - Metal and Flexible" based on indicated static-pressure class unless otherwise indicated.
B. Transverse Joints: Select joint types and fabricate according to SMACNA's "HVAC Duct Construction Standards - Metal and Flexible," Figure 2-1, "Rectangular Duct/Transverse Joints," for static-pressure class, applicable sealing requirements, materials involved, duct-support intervals, and other provisions in SMACNA's "HVAC Duct Construction Standards - Metal and Flexible."
C. Longitudinal Seams: Select seam types and fabricate according to SMACNA's "HVAC Duct Construction Standards - Metal and Flexible," Figure 2-2, "Rectangular Duct/Longitudinal Seams," for static-pressure class, applicable sealing requirements, materials involved, duct-support intervals, and other provisions in SMACNA's "HVAC Duct Construction Standards - Metal and Flexible."
D. Elbows, Transitions, Offsets, Branch Connections, and Other Duct Construction: Select types and fabricate according to SMACNA's "HVAC Duct Construction Standards - Metal and Flexible," Chapter 4, "Fittings and Other Construction," for static-pressure class, applicable sealing requirements, materials involved, duct-support intervals, and other provisions in SMACNA's "HVAC Duct Construction Standards - Metal and Flexible."

2.2 SINGLE-WALL ROUND DUCTS AND FITTINGS

A. General Fabrication Requirements: Comply with SMACNA's "HVAC Duct Construction Standards - Metal and Flexible," Chapter 3, "Round, Oval, and Flexible Duct," based on indicated static-pressure class unless otherwise indicated.
B. Transverse Joints: Select joint types and fabricate according to SMACNA's "HVAC Duct Construction Standards - Metal and Flexible," Figure 3-1, "Round Duct Transverse Joints," for static-pressure class, applicable sealing requirements, materials involved, duct-support intervals, and other provisions in SMACNA's "HVAC Duct Construction Standards - Metal and Flexible."
1. Transverse Joints in Ducts Larger Than 60 Inches in Diameter: Flanged.
C. Longitudinal Seams: Select seam types and fabricate according to SMACNA's "HVAC Duct Construction Standards - Metal and Flexible," Figure 3-2, "Round Duct Longitudinal Seams," for static-pressure class, applicable sealing requirements, materials involved, duct-support intervals, and other provisions in SMACNA's "HVAC Duct Construction Standards - Metal and Flexible."
1. Fabricate round ducts larger than 90 inches in diameter with butt-welded longitudinal seams.
2. Fabricate flat-oval ducts larger than 72 inches in width (major dimension) with butt-welded longitudinal seams.
D. Tees and Laterals: Select types and fabricate according to SMACNA's "HVAC Duct Construction Standards - Metal and Flexible," Figure 3-5, "90 Degree Tees and Laterals," and Figure 3-6, "Conical Tees," for static-pressure class, applicable sealing requirements, materials involved, duct-support intervals, and other provisions in SMACNA's "HVAC Duct Construction Standards - Metal and Flexible."

2.3 SHEET METAL MATERIALS

A. General Material Requirements: Comply with SMACNA's "HVAC Duct Construction Standards - Metal and Flexible" for acceptable materials, material thicknesses, and duct construction methods unless otherwise indicated. Sheet metal materials shall be free of pitting, seam marks, roller marks, stains, discolorations, and other imperfections.

B. Galvanized Sheet Steel: Comply with ASTM A 653/A 653M.
   1. Galvanized Coating Designation: G60.
   2. Finishes for Surfaces Exposed to View: Mill phosphatized.

C. Reinforcement Shapes and Plates: ASTM A 36/A 36M, steel plates, shapes, and bars; black and galvanized.
   1. Where black- and galvanized-steel shapes and plates are used to reinforce aluminum ducts, isolate the different metals with butyl rubber, neoprene, or EPDM gasket materials.

D. Tie Rods: Galvanized steel, 1/4-inch minimum diameter for lengths 36 inches or less; 3/8-inch minimum diameter for lengths longer than 36 inches.

2.4 SEALANT AND GASKETS

A. General Sealant and Gasket Requirements: Surface-burning characteristics for sealants and gaskets shall be a maximum flame-spread index of 25 and a maximum smoke-developed index of 50 when tested according to UL 723; certified by an NRTL.

B. Water-Based Joint and Seam Sealant:
   1. Application Method: Brush on.
   2. Solids Content: Minimum 65 percent.
   3. Shore A Hardness: Minimum 20.
   4. Water resistant.
   5. Mold and mildew resistant.
   6. VOC: Maximum 75 g/L (less water).
   7. Maximum Static-Pressure Class: 10-inch wg, positive and negative.
   8. Service: Indoor or outdoor.
   9. Substrate: Compatible with galvanized sheet steel (both PVC coated and bare), stainless steel, or aluminum sheets.

C. Flanged Joint Sealant: Comply with ASTM C 920.
   1. General: Single-component, acid-curing, silicone, elastomeric.
   2. Type: S.
   3. Grade: NS.
   4. Class: 25.
   5. Use: O.
   6. For indoor applications, sealant shall have a VOC content of 250 g/L or less when calculated according to 40 CFR 59, Subpart D (EPA Method 24).
   7. Sealant shall comply with the testing and product requirements of the California Department of Health Services' "Standard Practice for the Testing of Volatile Organic Emissions from Various Sources Using Small-Scale Environmental Chambers."

D. Flange Gaskets: Butyl rubber, neoprene, or EPDM polymer with polyisobutylene plasticizer.

2.5 HANGERS AND SUPPORTS

A. Hanger Rods for Noncorrosive Environments: Cadmium-plated steel rods and nuts.

B. Strap and Rod Sizes: Comply with SMACNA's "HVAC Duct Construction Standards - Metal and Flexible," Table 5-1, "Rectangular Duct Hangers Minimum Size," and Table 5-2, "Minimum Hanger Sizes for Round Duct."

C. Steel Cables for Galvanized-Steel Ducts: Galvanized steel complying with ASTM A 603.

D. Steel Cable End Connections: Cadmium-plated steel assemblies with brackets, swivel, and bolts designed for duct hanger service; with an automatic-locking and clamping device.

E. Duct Attachments: Sheet metal screws, blind rivets, or self-tapping metal screws; compatible with duct materials.

F. Trapeze and Riser Supports:
   1. Supports for Galvanized-Steel Ducts: Galvanized-steel shapes and plates.
   2. Supports for Stainless-Steel Ducts: Stainless-steel shapes and plates.
   3. Supports for Aluminum Ducts: Aluminum or galvanized steel coated with zinc chromate.

2.6 SEISMIC-RESTRAINT DEVICES

A. General Requirements for Restraint Components: Rated strengths, features, and applications shall be as defined in reports by an agency acceptable to authorities having jurisdiction.
   1. Structural Safety Factor: Allowable strength in tension, shear, and pullout force of components shall be at least four times the maximum seismic forces to which they will be subjected.
B. Channel Support System: Shop- or field-fabricated support assembly made of slotted steel channels rated in tension, compression, and torsion forces and with accessories for attachment to braced component at one end and to building structure at the other end. Include matching components and corrosion-resistant coating.
C. Restraint Cables: ASTM A 603, galvanized-steel cables with end connections made of cadmium-plated steel assemblies with brackets, swivel, and bolts designed for restraining cable service; and with an automatic-locking and clamping device or double-cable clips.
D. Hanger Rod Stiffener: Steel tube or steel slotted-support-system sleeve with internally bolted connections to hanger rod.
E. Mechanical Anchor Bolts: Drilled-in and stud-wedge or female-wedge type. Select anchor bolts with strength required for anchor and as tested according to ASTM E 488.

PART 3 EXECUTION

3.1 DUCT INSTALLATION

A. Drawing plans, schematics, and diagrams indicate general location and arrangement of duct system. Indicated duct locations, configurations, and arrangements were used to size ducts and calculate friction loss for air-handling equipment sizing and for other design considerations. Install duct systems as indicated unless deviations to layout are approved on Shop Drawings and Coordination Drawings.
B. Install ducts according to SMACNA's "HVAC Duct Construction Standards - Metal and Flexible" unless otherwise indicated.
C. Install round ducts in maximum practical lengths.
D. Install ducts with fewest possible joints.
E. Install factory- or shop-fabricated fittings for changes in direction, size, and shape and for branch connections.
F. Unless otherwise indicated, install ducts vertically and horizontally, and parallel and perpendicular to building lines.
G. Install ducts close to walls, overhead construction, columns, and other structural and permanent enclosure elements of building.
H. Install ducts with a clearance of 1 inch, plus allowance for insulation thickness.
I. Route ducts to avoid passing through transformer vaults and electrical equipment rooms and enclosures.
J. Where ducts pass through non-fire-rated interior partitions and exterior walls and are exposed to view, cover the opening between the partition and duct or duct insulation with sheet metal flanges of same metal thickness as the duct. Overlap openings on four sides by at least 1-1/2 inches.
K. Where ducts pass through fire-rated interior partitions and exterior walls, install fire dampers. Comply with requirements in Section 233300 "Air Duct Accessories" for fire and smoke dampers.
L. Protect duct interiors from moisture, construction debris and dust, and other foreign materials. Comply with SMACNA's "IAQ Guidelines for Occupied Buildings Under Construction," Appendix G, "Duct Cleanliness for New Construction Guidelines."

3.2 INSTALLATION OF EXPOSED DUCTWORK

A. Protect ducts exposed in finished spaces from being dented, scratched, or damaged.
B. Trim duct sealants flush with metal. Create a smooth and uniform exposed bead. Do not use two-part tape sealing system.

C. Grind welds to provide smooth surface free of burrs, sharp edges, and weld splatter. When welding stainless steel with a No. 3 or 4 finish, grind the welds flush, polish the exposed welds, and treat the welds to remove discoloration caused by welding.

D. Maintain consistency, symmetry, and uniformity in the arrangement and fabrication of fittings, hangers and supports, duct accessories, and air outlets.

E. Repair or replace damaged sections and finished work that does not comply with these requirements.

3.3 DUCT SEALING

A. Seal ducts for duct static-pressure, seal classes, and leakage classes specified in "Duct Schedule" Article according to SMACNA's "HVAC Duct Construction Standards - Metal and Flexible."

B. Seal ducts to the following seal classes according to SMACNA's "HVAC Duct Construction Standards - Metal and Flexible":

1. Comply with SMACNA's "HVAC Duct Construction Standards - Metal and Flexible."
2. Seal Class A at all locations.

3.4 HANGER AND SUPPORT INSTALLATION

A. Comply with SMACNA's "HVAC Duct Construction Standards - Metal and Flexible," Chapter 5, "Hangers and Supports."

B. Building Attachments: Concrete inserts, powder-actuated fasteners, or structural-steel fasteners appropriate for construction materials to which hangers are being attached.

1. Where practical, install concrete inserts before placing concrete.
2. Install powder-actuated concrete fasteners after concrete is placed and completely cured.
3. Use powder-actuated concrete fasteners for standard-weight aggregate concretes or for slabs more than 4 inches thick.
4. Do not use powder-actuated concrete fasteners for lightweight-aggregate concretes or for slabs less than 4 inches thick.
5. Do not use powder-actuated concrete fasteners for seismic restraints.

C. Hanger Spacing: Comply with SMACNA's "HVAC Duct Construction Standards - Metal and Flexible," Table 5-1, "Rectangular Duct Hangers Minimum Size," and Table 5-2, "Minimum Hanger Sizes for Round Duct," for maximum hanger spacing; install hangers and supports within 24 inches of each elbow and within 48 inches of each branch intersection.

D. Hangers Exposed to View: Threaded rod and angle or channel supports.

E. Support vertical ducts with steel angles or channel secured to the sides of the duct with welds, bolts, sheet metal screws, or blind rivets; support at each floor and at a maximum intervals of 16 feet.

F. Install upper attachments to structures. Select and size upper attachments with pull-out, tension, and shear capacities appropriate for supported loads and building materials where used.

3.5 SEISMIC-RESTRAINT-DEVICE INSTALLATION

A. Install ducts with hangers and braces designed to support the duct and to restrain against seismic forces required by applicable building codes. Comply with ASCE/SEI 7.

1. Space lateral supports a maximum of 40 feet o.c., and longitudinal supports a maximum of 80 feet o.c.
2. Brace a change of direction longer than 12 feet.

B. Select seismic-restraint devices with capacities adequate to carry present and future static and seismic loads.

C. Install cables so they do not bend across edges of adjacent equipment or building structure.

D. Install cable restraints on ducts that are suspended with vibration isolators.

E. Install seismic-restraint devices using methods approved by an agency acceptable to authorities having jurisdiction.

F. Attachment to Structure: If specific attachment is not indicated, anchor bracing and restraints to structure, to flanges of beams, to upper truss chords of bar joists, or to concrete members.

G. Drilling for and Setting Anchors:

1. Identify position of reinforcing steel and other embedded items prior to drilling holes for anchors. Do not damage existing reinforcement or embedded items during drilling. Notify the Architect if

reinforcing steel or other embedded items are encountered during drilling. Locate and avoid prestressed tendons, electrical and telecommunications conduit, and gas lines.

2. Do not drill holes in concrete or masonry until concrete, mortar, or grout has achieved full design strength.
3. Wedge Anchors: Protect threads from damage during anchor installation. Heavy-duty sleeve anchors shall be installed with sleeve fully engaged in the structural element to which anchor is to be fastened.
4. Set anchors to manufacturer's recommended torque, using a torque wrench.
5. Install zinc-coated steel anchors for interior applications and stainless-steel anchors for applications exposed to weather.

3.6 CONNECTIONS

A. Make connections to equipment with flexible connectors complying with Section 233300 "Air Duct Accessories."

B. Comply with SMACNA's "HVAC Duct Construction Standards - Metal and Flexible" for branch, outlet and inlet, and terminal unit connections.

3.7 PAINTING

A. Paint interior of metal ducts that are visible through registers and grilles and that do not have duct liner. Apply one coat of flat, black, latex paint over a compatible galvanized-steel primer. Paint materials and application requirements are specified in Section 099113 "Exterior Painting" and Section 099123 "Interior Painting."

3.8 FIELD QUALITY CONTROL

A. Perform tests and inspections.

B. Duct system will be considered defective if it does not pass tests and inspections.

C. Prepare test and inspection reports.

3.9 START UP

A. Air Balance: Comply with requirements in Section 230593 "Testing, Adjusting, and Balancing for HVAC."

3.10 DUCT SCHEDULE

A. Supply Ducts:
   1. Ducts Connected to Fan Coil Units, Furnaces, Heat Pumps, and Terminal Units:
      a. Pressure Class: Positive 2-inch wg.
      b. Minimum SMACNA Seal Class: A.
      c. SMACNA Leakage Class for Rectangular: 12.
      d. SMACNA Leakage Class for Round and Flat Oval: 12.
   2. Ducts Connected to Equipment Not Listed Above:
      a. Pressure Class: Positive 2-inch wg.
      b. Minimum SMACNA Seal Class: A.
      c. SMACNA Leakage Class for Rectangular: 12.
      d. SMACNA Leakage Class for Round and Flat Oval: 12.

B. Return Ducts:
   1. Ducts Connected to Fan Coil Units:
      a. Pressure Class: Positive or negative 2-inch wg.
      b. Minimum SMACNA Seal Class: A.
      c. SMACNA Leakage Class for Rectangular: 12.
      d. SMACNA Leakage Class for Round and Flat Oval: 12.
   2. Ducts Connected to Equipment Not Listed Above:
      a. Pressure Class: Positive or negative 2-inch wg.
      b. Minimum SMACNA Seal Class: A.

c. SMACNA Leakage Class for Rectangular: 12.
d. SMACNA Leakage Class for Round and Flat Oval: 12.

C. Exhaust Ducts:
1. Ducts Connected to Fans Exhausting (ASHRAE 62.1, Class 1 and 2) Air:
a. Pressure Class: Negative 2-inch wg.
b. Minimum SMACNA Seal Class: A if negative pressure, and A if positive pressure.
c. SMACNA Leakage Class for Rectangular: 12.
d. SMACNA Leakage Class for Round and Flat Oval: 12.
2. Ducts Connected to Equipment Not Listed Above:
a. Pressure Class: Positive or negative 2-inch wg.
b. Minimum SMACNA Seal Class: A if negative pressure, and A if positive pressure.
c. SMACNA Leakage Class for Rectangular: 12.
d. SMACNA Leakage Class for Round and Flat Oval: 12.

D. Outdoor-Air (Not, Heated, or Cooled) Ducts:
1. Ducts Connected to Fan Coil Units:
a. Pressure Class: Positive or negative 2-inch wg.
b. Minimum SMACNA Seal Class: A.
c. SMACNA Leakage Class for Rectangular: 12.
d. SMACNA Leakage Class for Round and Flat Oval: 12.
2. Ducts Connected to Equipment Not Listed Above:
a. Pressure Class: Positive or negative 2-inch wg.
b. Minimum SMACNA Seal Class: A.
c. SMACNA Leakage Class for Rectangular: 12.
d. SMACNA Leakage Class for Round and Flat Oval: 12.

E. Intermediate Reinforcement:
1. Galvanized-Steel Ducts: Galvanized steel.

F. Elbow Configuration:
1. Rectangular Duct: Comply with SMACNA's "HVAC Duct Construction Standards - Metal and Flexible," Figure 4-2, "Rectangular Elbows."
a. Velocity 1000 fpm or Lower:
1) Radius Type RE 1 with minimum 0.5 radius-to-diameter ratio.
2) Mitered Type RE 4 without vanes.
b. Velocity 1000 to 1500 fpm:
1) Radius Type RE 1 with minimum 1.0 radius-to-diameter ratio.
2) Radius Type RE 3 with minimum 0.5 radius-to-diameter ratio and two vanes.
3) Mitered Type RE 2 with vanes complying with SMACNA's "HVAC Duct Construction Standards - Metal and Flexible," Figure 4-3, "Vanes and Vane Runners," and Figure 4-4, "Vane Support in Elbows."
c. Velocity 1500 fpm or Higher:
1) Radius Type RE 1 with minimum 1.5 radius-to-diameter ratio.
2) Radius Type RE 3 with minimum 1.0 radius-to-diameter ratio and two vanes.
3) Mitered Type RE 2 with vanes complying with SMACNA's "HVAC Duct Construction Standards - Metal and Flexible," Figure 4-3, "Vanes and Vane Runners," and Figure 4-4, "Vane Support in Elbows."
2. Rectangular Duct: Comply with SMACNA's "HVAC Duct Construction Standards - Metal and Flexible," Figure 4-2, "Rectangular Elbows."
a. Radius Type RE 1 with minimum 1.5 radius-to-diameter ratio.
3. Round Duct: Comply with SMACNA's "HVAC Duct Construction Standards - Metal and Flexible," Figure 3-4, "Round Duct Elbows."
a. Minimum Radius-to-Diameter Ratio and Elbow Segments: Comply with SMACNA's "HVAC Duct Construction Standards - Metal and Flexible," Table 3-1, "Mitered Elbows." Elbows with less than 90-degree change of direction have proportionately fewer segments.
1) Velocity 1500 fpm or Higher: 1.5 radius-to-diameter ratio and five segments for 90-degree elbow.
b. Round Elbows, 12 Inches and Smaller in Diameter: Stamped or pleated.

c. Round Elbows, 14 Inches and Larger in Diameter: Standing seam.

G. Branch Configuration:

1. Rectangular Duct: Comply with SMACNA's "HVAC Duct Construction Standards - Metal and Flexible," Figure 4-6, "Branch Connection."

a. Rectangular Main to Rectangular Branch: 45-degree entry.

b. Rectangular Main to Round Branch: Spin in.

2. Round and Flat Oval: Comply with SMACNA's "HVAC Duct Construction Standards - Metal and Flexible," Figure 3-5, "90 Degree Tees and Laterals," and Figure 3-6, "Conical Tees." Saddle taps are permitted in existing duct.

a. Velocity 1000 fpm or Lower: 90-degree tap.

b. Velocity 1000 to 1500 fpm: Conical tap.

c. Velocity 1500 fpm or Higher: 45-degree lateral.

END OF SECTION

SECTION 233300 - AIR DUCT ACCESSORIES

PART 1 GENERAL

1.1 SUMMARY

A. Section Includes:
1. Manual volume dampers.
2. Flange connectors.
3. Turning vanes.
4. Flexible connectors.
5. Flexible ducts.
6. Duct accessory hardware.

1.2 ACTION SUBMITTALS

A. Product Data: For each type of product.
1. For duct silencers, include pressure drop and dynamic insertion loss data. Include breakout noise calculations for high transmission loss casings.

B. LEED Submittals:
1. Product Data for Prerequisite IEQ 1: Documentation indicating that units comply with ASHRAE 62.1, Section 5 - "Systems and Equipment."
2. Product Data for Prerequisite EA 2: Documentation indicating that duct insulation R-values comply with tables in ASHRAE/IESNA 90.1, Section 6 - "Heating, Ventilating, and Air Conditioning."

1.3 INFORMATIONAL SUBMITTALS

A. Coordination Drawings: Reflected ceiling plans, drawn to scale, on which ceiling-mounted access panels and access doors required for access to duct accessories are shown and coordinated with each other, using input from Installers of the items involved.

B. Source quality-control reports.

1.4 CLOSEOUT SUBMITTALS

A. Operation and Maintenance Data: For air duct accessories to include in operation and maintenance manuals.

PART 2 PRODUCTS

2.1 ASSEMBLY DESCRIPTION

A. Comply with NFPA 90A, "Installation of Air Conditioning and Ventilating Systems," and with NFPA 90B, "Installation of Warm Air Heating and Air Conditioning Systems."

B. Comply with SMACNA's "HVAC Duct Construction Standards - Metal and Flexible" for acceptable materials, material thicknesses, and duct construction methods unless otherwise indicated. Sheet metal materials shall be free of pitting, seam marks, roller marks, stains, discolorations, and other imperfections.

2.2 MATERIALS

A. Galvanized Sheet Steel: Comply with ASTM A 653/A 653M.
1. Galvanized Coating Designation: G60.
2. Exposed-Surface Finish: Mill phosphatized.

B. Extruded Aluminum: Comply with ASTM B 221, Alloy 6063, Temper T6.

C. Reinforcement Shapes and Plates: Galvanized-steel reinforcement where installed on galvanized sheet metal ducts; compatible materials for aluminum and stainless-steel ducts.

D. Tie Rods: Galvanized steel, 1/4-inch minimum diameter for lengths 36 inches or less; 3/8-inch minimum diameter for lengths longer than 36 inches.

2.3 MANUAL VOLUME DAMPERS

A. Standard, Steel, Manual Volume Dampers:
   1. Standard leakage rating.
   2. Suitable for horizontal or vertical applications.
   3. Frames:
      a. Frame: Hat-shaped, 0.094-inch-thick, galvanized sheet steel.
      b. Mitered and welded corners.
      c. Flanges for attaching to walls and flangeless frames for installing in ducts.
   4. Blades:
      a. Multiple or single blade.
      b. Parallel- or opposed-blade design.
      c. Stiffen damper blades for stability.
      d. Galvanized-steel, 0.064 inch thick.
   5. Blade Axles: Galvanized steel.
   6. Bearings:
      a. Oil-impregnated bronze.
      b. Dampers in ducts with pressure classes of 3-inch wg or less shall have axles full length of damper blades and bearings at both ends of operating shaft.
   7. Tie Bars and Brackets: Galvanized steel.
B. Jackshaft:
   1. Size: 0.5-inch diameter.
   2. Material: Galvanized-steel pipe rotating within pipe-bearing assembly mounted on supports at each mullion and at each end of multiple-damper assemblies.
   3. Length and Number of Mountings: As required to connect linkage of each damper in multiple-damper assembly.
C. Damper Hardware:
   1. Zinc-plated, die-cast core with dial and handle made of 3/32-inch-thick zinc-plated steel, and a 3/4-inch hexagon locking nut.
   2. Include center hole to suit damper operating-rod size.
   3. Include elevated platform for insulated duct mounting.

2.4 FLANGE CONNECTORS

A. Description: Add-on, factory-fabricated, slide-on transverse flange connectors, gaskets, and components.
B. Material: Galvanized steel.
C. Gage and Shape: Match connecting ductwork.

2.5 TURNING VANES

A. Manufactured Turning Vanes for Metal Ducts: Curved blades of galvanized sheet steel; support with bars perpendicular to blades set; set into vane runners suitable for duct mounting.
   1. Acoustic Turning Vanes: Fabricate airfoil-shaped aluminum extrusions with perforated faces and fibrous-glass fill.
B. Manufactured Turning Vanes for Nonmetal Ducts: Fabricate curved blades of resin-bonded fiberglass with acrylic polymer coating; support with bars perpendicular to blades set; set into vane runners suitable for duct mounting.
C. General Requirements: Comply with SMACNA's "HVAC Duct Construction Standards - Metal and Flexible"; Figures 4-3, "Vanes and Vane Runners," and 4-4, "Vane Support in Elbows."
D. Vane Construction: Double wall.
E. Vane Construction: Single wall for ducts up to 48 inches wide and double wall for larger dimensions.

2.6 DUCT ACCESS PANEL ASSEMBLIES

A. Labeled according to UL 1978 by an NRTL.
B. Panel and Frame: Minimum thickness 0.0528-inch carbon steel.
C. Fasteners: Stainless steel. Panel fasteners shall not penetrate duct wall.
D. Gasket: Comply with NFPA 96; grease-tight, high-temperature ceramic fiber, rated for minimum 2000 deg F.
E. Minimum Pressure Rating: 10-inch wg, positive or negative.

2.7 FLEXIBLE CONNECTORS

A. Materials: Flame-retardant or noncombustible fabrics.
B. Coatings and Adhesives: Comply with UL 181, Class 1.
C. Metal-Edged Connectors: Factory fabricated with a fabric strip 3-1/2 inches wide attached to two strips of 2-3/4-inch-wide, 0.028-inch-thick, galvanized sheet steel or 0.032-inch-thick aluminum sheets. Provide metal compatible with connected ducts.
D. Indoor System, Flexible Connector Fabric: Glass fabric double coated with neoprene.
   1. Minimum Weight: 26 oz./sq. yd..
   2. Tensile Strength: 480 lbf/inch in the warp and 360 lbf/inch in the filling.
   3. Service Temperature: Minus 40 to plus 200 deg F.
E. Outdoor System, Flexible Connector Fabric: Glass fabric double coated with weatherproof, synthetic rubber resistant to UV rays and ozone.
   1. Minimum Weight: 24 oz./sq. yd..
   2. Tensile Strength: 530 lbf/inch in the warp and 440 lbf/inch in the filling.
   3. Service Temperature: Minus 50 to plus 250 deg F.
F. Thrust Limits: Combination coil spring and elastomeric insert with spring and insert in compression, and with a load stop. Include rod and angle-iron brackets for attaching to fan discharge and duct.
   1. Frame: Steel, fabricated for connection to threaded rods and to allow for a maximum of 30 degrees of angular rod misalignment without binding or reducing isolation efficiency.
   2. Outdoor Spring Diameter: Not less than 80 percent of the compressed height of the spring at rated load.
   3. Minimum Additional Travel: 50 percent of the required deflection at rated load.
   4. Lateral Stiffness: More than 80 percent of rated vertical stiffness.
   5. Overload Capacity: Support 200 percent of rated load, fully compressed, without deformation or failure.
   6. Elastomeric Element: Molded, oil-resistant rubber or neoprene.
   7. Coil Spring: Factory set and field adjustable for a maximum of 1/4-inch movement at start and stop.

2.8 FLEXIBLE DUCTS

A. Noninsulated, Flexible Duct: UL 181, Class 1, black polymer film supported by helically wound, spring-steel wire.
   1. Pressure Rating: 4-inch wg positive and 0.5-inch wg negative.
   2. Maximum Air Velocity: 4000 fpm.
   3. Temperature Range: Minus 20 to plus 175 deg F.
B. Insulated, Flexible Duct: UL 181, Class 1, black polymer film supported by helically wound, spring-steel wire; fibrous-glass insulation; polyethylene vapor-barrier film.
   1. Pressure Rating: 4-inch wg positive and 0.5-inch wg negative.
   2. Maximum Air Velocity: 4000 fpm.
   3. Temperature Range: Minus 20 to plus 175 deg F.
   4. Insulation R-Value: Comply with ASHRAE/IESNA 90.1.
C. Flexible Duct Connectors:
   1. Clamps: Stainless-steel band with cadmium-plated hex screw to tighten band with a worm-gear action in sizes 3 through 18 inches, to suit duct size.
   2. Non-Clamp Connectors: Adhesive plus sheet metal screws.

2.9 DUCT ACCESSORY HARDWARE

A. Instrument Test Holes: Cast iron or cast aluminum to suit duct material, including screw cap and gasket. Size to allow insertion of pitot tube and other testing instruments and of length to suit duct-insulation thickness.

B. Adhesives: High strength, quick setting, neoprene based, waterproof, and resistant to gasoline and grease.

PART 3 EXECUTION

3.1 INSTALLATION

A. Install duct accessories according to applicable details in SMACNA's "HVAC Duct Construction Standards - Metal and Flexible" for metal ducts and in NAIMA AH116, "Fibrous Glass Duct Construction Standards," for fibrous-glass ducts.

B. Install duct accessories of materials suited to duct materials; use galvanized-steel accessories in galvanized-steel and fibrous-glass ducts, stainless-steel accessories in stainless-steel ducts, and aluminum accessories in aluminum ducts.

C. Install backdraft dampers at inlet of exhaust fans or exhaust ducts as close as possible to exhaust fan unless otherwise indicated.

D. Install volume dampers at points on supply, return, and exhaust systems where branches extend from larger ducts. Where dampers are installed in ducts having duct liner, install dampers with hat channels of same depth as liner, and terminate liner with nosing at hat channel.

   1. Install steel volume dampers in steel ducts.

E. Set dampers to fully open position before testing, adjusting, and balancing.

F. Install test holes at fan inlets and outlets and elsewhere as indicated.

G. Install access doors with swing against duct static pressure.

H. Access Door Sizes:

   1. One-Hand or Inspection Access: 8 by 5 inches.
   2. Two-Hand Access: 12 by 6 inches.
   3. Head and Hand Access: 18 by 10 inches.
   4. Head and Shoulders Access: 21 by 14 inches.
   5. Body Access: 25 by 14 inches.
   6. Body plus Ladder Access: 25 by 17 inches.

I. Label access doors according to Section 230553 "Identification for HVAC Piping and Equipment" to indicate the purpose of access door.

J. Install flexible connectors to connect ducts to equipment.

K. Connect diffusers to ducts with maximum 60-inch lengths of flexible duct clamped or strapped in place.

L. Connect flexible ducts to metal ducts with adhesive plus sheet metal screws.

M. Install duct test holes where required for testing and balancing purposes.

N. Install thrust limits at centerline of thrust, symmetrical on both sides of equipment. Attach thrust limits at centerline of thrust and adjust to a maximum of 1/4-inch movement during start and stop of fans.

3.2 FIELD QUALITY CONTROL

A. Tests and Inspections:

   1. Operate dampers to verify full range of movement.
   2. Inspect locations of access doors and verify that purpose of access door can be performed.
   3. Operate fire, smoke, and combination fire and smoke dampers to verify full range of movement and verify that proper heat-response device is installed.
   4. Inspect turning vanes for proper and secure installation.
   5. Operate remote damper operators to verify full range of movement of operator and damper.

END OF SECTION

SECTION 233423 - HVAC POWER VENTILATORS

PART 1 GENERAL

1.1 SUMMARY

A. Section Includes:
   1. Centrifugal roof ventilators.

1.2 PERFORMANCE REQUIREMENTS

A. Project Altitude: Base fan-performance ratings on actual Project site elevations.
B. Operating Limits: Classify according to AMCA 99.

1.3 ACTION SUBMITTALS

A. Product Data: For each type of product indicated. Include rated capacities, operating characteristics, and furnished specialties and accessories. Also include the following:
   1. Certified fan performance curves with system operating conditions indicated.
   2. Certified fan sound-power ratings.
   3. Motor ratings and electrical characteristics, plus motor and electrical accessories.
   4. Material thickness and finishes, including color charts.
   5. Dampers, including housings, linkages, and operators.
   6. Roof curbs.
   7. Fan speed controllers.

1.4 CLOSEOUT SUBMITTALS

A. Operation and Maintenance Data: For power ventilators to include in emergency, operation, and maintenance manuals.

1.5 QUALITY ASSURANCE

A. Electrical Components, Devices, and Accessories: Listed and labeled as defined in NFPA 70, by a qualified testing agency, and marked for intended location and application.
B. AMCA Compliance: Fans shall have AMCA-Certified performance ratings and shall bear the AMCA-Certified Ratings Seal.
C. UL Standards: Power ventilators shall comply with UL 705. Power ventilators for use for restaurant kitchen exhaust shall also comply with UL 762.

1.6 COORDINATION

A. Coordinate size and location of structural-steel support members.
B. Coordinate sizes and locations of concrete bases with actual equipment provided.
C. Coordinate sizes and locations of roof curbs, equipment supports, and roof penetrations with actual equipment provided.

PART 2 PRODUCTS

2.1 CENTRIFUGAL ROOF VENTILATORS

A. Greenheck, Cook, Twin City.
B. Housing: Removable, spun-aluminum, dome top and outlet baffle; square, one-piece, aluminum base with venturi inlet cone.
   1. Hinged Subbase: Galvanized-steel hinged arrangement permitting service and maintenance.
C. Fan Wheels: Aluminum hub and wheel with backward-inclined blades.

D. Belt Drives:
   1. Resiliently mounted to housing.
   2. Fan Shaft: Turned, ground, and polished steel; keyed to wheel hub.
   3. Shaft Bearings: Permanently lubricated, permanently sealed, self-aligning ball bearings.
   4. Pulleys: Cast-iron, adjustable-pitch motor pulley.
   5. Fan and motor isolated from exhaust airstream.
E. Accessories:
   1. Variable-Speed Controller: Solid-state control to reduce speed from 100 to less than 50 percent.
   2. Disconnect Switch: Nonfusible type, with thermal-overload protection mounted inside fan housing, factory wired through an internal aluminum conduit.
   3. Bird Screens: Removable, 1/2-inch mesh, aluminum or brass wire.
   4. Dampers: Counterbalanced, parallel-blade, backdraft dampers mounted in curb base; factory set to close when fan stops.
F. Roof Curbs: Galvanized steel; mitered and welded corners; 1-1/2-inch-thick, rigid, fiberglass insulation adhered to inside walls; and 1-1/2-inch wood nailer. Size as required to suit roof opening and fan base.
   1. Configuration: Built-in cant and mounting flange.
   2. Overall Height: 8 inches.
   3. Pitch Mounting: Manufacture curb for roof slope.
   4. Metal Liner: Galvanized steel.
   5. Mounting Pedestal: Galvanized steel with removable access panel.

2.2 MOTORS

A. Comply with NEMA designation, temperature rating, service factor, enclosure type, and efficiency requirements for motors specified in Section 230513 "Common Motor Requirements for HVAC Equipment."
   1. Motor Sizes: Minimum size as indicated. If not indicated, large enough so driven load will not require motor to operate in service factor range above 1.0.
B. Enclosure Type: Totally enclosed, fan cooled.

2.3 SOURCE QUALITY CONTROL

A. Certify sound-power level ratings according to AMCA 301, "Methods for Calculating Fan Sound Ratings from Laboratory Test Data." Factory test fans according to AMCA 300, "Reverberant Room Method for Sound Testing of Fans." Label fans with the AMCA-Certified Ratings Seal.
B. Certify fan performance ratings, including flow rate, pressure, power, air density, speed of rotation, and efficiency by factory tests according to AMCA 210, "Laboratory Methods of Testing Fans for Aerodynamic Performance Rating." Label fans with the AMCA-Certified Ratings Seal.

PART 3 EXECUTION

3.1 INSTALLATION

A. Install power ventilators level and plumb.
B. Equipment Mounting:
   1. Comply with requirements for vibration isolation and seismic control devices specified in Section 230548 "Vibration and Seismic Controls for HVAC."
C. Secure roof-mounted fans to roof curbs with cadmium-plated hardware.
D. Install units with clearances for service and maintenance.
E. Label units according to requirements specified in Section 230553 "Identification for HVAC Piping and Equipment."

3.2 CONNECTIONS

A. Drawings indicate general arrangement of ducts and duct accessories. Make final duct connections with flexible connectors. Flexible connectors are specified in Section 233300 "Air Duct Accessories."

B. Install ducts adjacent to power ventilators to allow service and maintenance.
C. Ground equipment according to Section 260526 "Grounding and Bonding for Electrical Systems."
D. Connect wiring according to Section 260519 "Low-Voltage Electrical Power Conductors and Cables."

3.3 FIELD QUALITY CONTROL

A. Perform tests and inspections.
   1. Manufacturer's Field Service: Engage a factory-authorized service representative to inspect components, assemblies, and equipment installations, including connections, and to assist in testing.
B. Tests and Inspections:
   1. Verify that shipping, blocking, and bracing are removed.
   2. Verify that unit is secure on mountings and supporting devices and that connections to ducts and electrical components are complete. Verify that proper thermal-overload protection is installed in motors, starters, and disconnect switches.
   3. Verify that cleaning and adjusting are complete.
   4. Disconnect fan drive from motor, verify proper motor rotation direction, and verify fan wheel free rotation and smooth bearing operation. Reconnect fan drive system, align and adjust belts, and install belt guards.
   5. Adjust belt tension.
   6. Adjust damper linkages for proper damper operation.
   7. Verify lubrication for bearings and other moving parts.
   8. Verify that manual and automatic volume control and fire and smoke dampers in connected ductwork systems are in fully open position.
   9. Disable automatic temperature-control operators, energize motor and adjust fan to indicated rpm, and measure and record motor voltage and amperage.
   10. Shut unit down and reconnect automatic temperature-control operators.
   11. Remove and replace malfunctioning units and retest as specified above.
C. Test and adjust controls and safeties. Replace damaged and malfunctioning controls and equipment.
D. Prepare test and inspection reports.

3.4 ADJUSTING

A. Adjust damper linkages for proper damper operation.
B. Adjust belt tension.
C. Comply with requirements in Section 230593 "Testing, Adjusting, and Balancing for HVAC" for testing, adjusting, and balancing procedures.
D. Replace fan and motor pulleys as required to achieve design airflow.
E. Lubricate bearings.

END OF SECTION

SECTION 233713 - DIFFUSERS, REGISTERS, AND GRILLES

PART 1 GENERAL

1.1 SUMMARY

A. Section Includes:
1. Rectangular and square ceiling diffusers.
2. Linear slot diffusers.
3. Modular core supply grilles.
4. Fixed face registers and grilles.

B. Related Sections:
1. Section 233300 "Air Duct Accessories" for fire and smoke dampers and volume-control dampers not integral to diffusers, registers, and grilles.

1.2 ACTION SUBMITTALS

A. Product Data: For each type of product indicated, include the following:
1. Data Sheet: Indicate materials of construction, finish, and mounting details; and performance data including throw and drop, static-pressure drop, and noise ratings.
2. Diffuser, Register, and Grille Schedule: Indicate drawing designation, room location, quantity, model number, size, and accessories furnished.

PART 2 PRODUCTS

2.1 CEILING DIFFUSERS

A. Rectangular and Square Ceiling Diffusers:
1. Material: Steel.
2. Finish: Baked enamel, white.
3. Face Size: 24 by 24 inches.
4. Face Style: Plaque.
5. Mounting: T-bar.
6. Pattern: Fixed.

2.2 CEILING LINEAR SLOT OUTLETS

A. Linear Slot Diffuser:
1. Devices shall be specifically designed for variable-air-volume flows.
2. Material - Shell: Steel, insulated.
3. Material - Pattern Controller and Tees: Aluminum.
4. Finish - Face and Shell: Baked enamel, black.
5. Finish - Pattern Controller: Baked enamel, black.
6. Finish - Tees: Baked enamel, white.
7. Accessories: Plaster frame.

2.3 HIGH-CAPACITY DIFFUSERS

A. Modular Core Supply Grilles:
1. Throw: Extended distance for airflow rates.
2. Material: Steel.
3. Finish: White baked acrylic.
4. Border: 1-1/2-inch width with countersunk screw holes.
5. Blades:

a. Airfoil, individually adjustable horizontally.
b. Double deflection.
c. Set in modules.

6. Modules: Removable; rotatable.
7. Mounting: Surface.
8. Accessory: Opposed-blade steel damper.

2.4 REGISTERS AND GRILLES

A. Fixed Face Grille:
1. Material: Steel.
2. Finish: Baked enamel, white.
3. Face Arrangement: 1/2-by-1/2-by-1/2-inch grid core.
4. Core Construction: Integral.
5. Frame: 1 inch wide.
6. Mounting: Concealed.

2.5 SOURCE QUALITY CONTROL

A. Verification of Performance: Rate diffusers, registers, and grilles according to ASHRAE 70, "Method of Testing for Rating the Performance of Air Outlets and Inlets."

PART 3 EXECUTION

3.1 EXAMINATION

A. Examine areas where diffusers, registers, and grilles are to be installed for compliance with requirements for installation tolerances and other conditions affecting performance of equipment.
B. Proceed with installation only after unsatisfactory conditions have been corrected.

3.2 INSTALLATION

A. Install diffusers, registers, and grilles level and plumb.
B. Ceiling-Mounted Outlets and Inlets: Drawings indicate general arrangement of ducts, fittings, and accessories. Air outlet and inlet locations have been indicated to achieve design requirements for air volume, noise criteria, airflow pattern, throw, and pressure drop. Make final locations where indicated, as much as practical. For units installed in lay-in ceiling panels, locate units in the center of panel. Where architectural features or other items conflict with installation, notify Architect for a determination of final location.
C. Install diffusers, registers, and grilles with airtight connections to ducts and to allow service and maintenance of dampers, air extractors, and fire dampers.

3.3 ADJUSTING

A. After installation, adjust diffusers, registers, and grilles to air patterns indicated, or as directed, before starting air balancing.

END OF SECTION

SECTION 237313 - MODULAR INDOOR CENTRAL-STATION AIR-HANDLING UNITS

PART 1 GENERAL

1.1 SUMMARY

A. Section Includes:
   1. Variable-air-volume, dual-duct air-handling units.

1.2 PERFORMANCE REQUIREMENTS

A. Structural Performance: Casing panels shall be self-supporting and capable of withstanding 133 percent of internal static pressures indicated, without panel joints exceeding a deflection of L/200 where "L" is the unsupported span length within completed casings.
B. Seismic Performance: Air-handling units shall withstand the effects of earthquake motions determined according to ASCE/SEI 7.
   1. The term "withstand" means "the unit will remain in place without separation of any parts from the device when subjected to the seismic forces specified”

1.3 ACTION SUBMITTALS

A. Product Data: For each air-handling unit indicated.
   1. Unit dimensions and weight.
   2. Cabinet material, metal thickness, finishes, insulation, and accessories.
   3. Fans:
      a. Certified fan-performance curves with system operating conditions indicated.
      b. Certified fan-sound power ratings.
      c. Fan construction and accessories.
      d. Motor ratings, electrical characteristics, and motor accessories.
   4. Certified coil-performance ratings with system operating conditions indicated.
   5. Dampers, including housings, linkages, and operators.
   6. Filters with performance characteristics.

1.4 INFORMATIONAL SUBMITTALS

A. Coordination Drawings: Floor plans and other details, drawn to scale, on which the following items are shown and coordinated with each other, using input from installers of the items involved:
   1. Mechanical-room layout and relationships between components and adjacent structural and mechanical elements.
   2. Support location, type, and weight.
   3. Field measurements.
B. Source quality-control reports.
C. Field quality-control reports.

1.5 CLOSEOUT SUBMITTALS

A. Operation and Maintenance Data: For air-handling units to include in emergency, operation, and maintenance manuals.

1.6 MAINTENANCE MATERIAL SUBMITTALS

A. Furnish extra materials that match products installed and that are packaged with protective covering for storage and identified with labels describing contents.
   1. Filters: One set(s) for each air-handling unit.
   2. Gaskets: One set(s) for each access door.
   3. Fan Belts: One set(s) for each air-handling unit fan.

1.7 QUALITY ASSURANCE

A. Electrical Components, Devices, and Accessories: Listed and labeled as defined in NFPA 70, by a qualified testing agency, and marked for intended location and application.
B. NFPA Compliance: Comply with NFPA 90A for design, fabrication, and installation of air-handling units and components.
C. ASHRAE/IESNA 90.1 Compliance: Applicable requirements in ASHRAE/IESNA 90.1, Section 6 - "Heating, Ventilating, and Air-Conditioning."
D. Comply with NFPA 70.

1.8 COORDINATION

A. Coordinate sizes and locations of structural bases with actual equipment provided.
B. Coordinate sizes and locations of structural-steel support members, if any, with actual equipment provided.

PART 2 PRODUCTS

2.1 MANUFACTURERS

A. Basis-of-Design Product: Subject to compliance with requirements, provide product indicated on Drawings or comparable product by one of the following:
   1. Carrier Corporation; a member of the United Technologies Corporation Family.
   2. Dynamic Air Inc.
   3. McQuay International
   4. Trane; American Standard Inc.
   5. USA Coil & Air.
   6. YORK International Corporation.

2.2 UNIT CASINGS

A. General Fabrication Requirements for Casings:
   1. Forming: Form walls, roofs, and floors with at least two breaks at each joint.
   2. Casing Joints: Sheet metal screws or pop rivets.
   3. Sealing: Seal all joints with water-resistant sealant.
   4. Factory Finish for Steel Casings: Apply manufacturer's standard primer immediately after cleaning and pretreating.
   5. Factory Finish for Steel Casings: Immediately after cleaning and pretreating, apply manufacturer's standard two-coat, baked-on enamel finish, consisting of prime coat and thermosetting topcoat.
   6. Casing Coating: Powder-baked enamel.
   7. Airstream Surfaces: Surfaces in contact with the airstream shall comply with requirements in ASHRAE 62.1.
      a. No insulation shall be in contact with the airstream.
B. Casing Insulation and Adhesive:
   1. Materials: ASTM C 1071, Type II.
   2. Location and Application: Encased between outside and inside casing.
C. Inspection and Access Panels and Access Doors:
   1. Panel and Door Fabrication: Formed and reinforced, single- or double-wall and insulated panels of same materials and thicknesses as casing.
   2. Inspection and Access Panels:
      a. Fasteners: Two or more camlock type for panel lift-out operation. Arrangement shall allow panels to be opened against air-pressure differential.
      b. Gasket: Neoprene, applied around entire perimeters of panel frames.
      c. Size: Large enough to allow inspection and maintenance of air-handling unit's internal components.
   3. Access Doors:

a. Hinges: A minimum of two ball-bearing hinges or stainless-steel piano hinge and two wedge-lever-type latches, operable from inside and outside. Arrange doors to be opened against air-pressure differential.

b. Gasket: Neoprene, applied around entire perimeters of panel frames.

4. Locations and Applications:

a. Fan Section: Doors and inspection and access panels.

b. Access Section: Doors.

c. Coil Section: Inspection and access panel.

d. Damper Section: Doors.

e. Filter Section: Inspection and access panels large enough to allow periodic removal and installation of filters.

f. Mixing Section: Doors.

g. Humidifier Section: Doors.

D. Condensate Drain Pans:

1. Fabricated with two percent slope in at least two planes to collect condensate from cooling coils (including coil piping connections, coil headers, and return bends) and from humidifiers and to direct water toward drain connection.

a. Length: Extend drain pan downstream from leaving face to comply with ASHRAE 62.1.

b. Depth: A minimum of 2 inches deep.

c. Minimum Connection Size: NPS 2.

2. Units with stacked coils shall have an intermediate drain pan to collect condensate from top coil.

E. Air-Handling-Unit Mounting Frame: Formed galvanized-steel channel or structural channel supports, designed for low deflection, welded with integral lifting lugs.

1. Seismic Fabrication Requirements: Fabricate mounting base and attachment to air-handling unit sections, accessories, and components with reinforcement strong enough to withstand seismic forces defined in Division 23 Section "Vibration and Seismic Controls for HVAC Piping and Equipment" when air-handling unit frame is anchored to building structure.

2.3 FAN, DRIVE, AND MOTOR SECTION

A. Fan and Drive Assemblies: Statically and dynamically balanced and designed for continuous operation at maximum-rated fan speed and motor horsepower.

1. Shafts: Designed for continuous operation at maximum-rated fan speed and motor horsepower, and with field-adjustable alignment.

a. Turned, ground, and polished hot-rolled steel with keyway. Ship with a protective coating of lubricating oil.

b. Designed to operate at no more than 70 percent of first critical speed at top of fan's speed range.

B. Centrifugal Fan Housings: Formed- and reinforced-steel panels to form curved scroll housings with shaped cutoff and spun-metal inlet bell.

1. Bracing: Steel angle or channel supports for mounting and supporting fan scroll, wheel, motor, and accessories.

2. Horizontal-Flanged, Split Housing: Bolted construction.

3. Housing for Supply Fan: Attach housing to fan-section casing with metal-edged flexible duct connector.

4. Flexible Connector: Factory fabricated with a fabric strip wide attached to 2 strips of 2-3/4-inch-wide, 0.028-inch-thick, galvanized-steel sheet or 0.032-inch-thick aluminum sheets; select metal compatible with casing.

a. Flexible Connector Fabric: Glass fabric, double coated with neoprene. Fabrics, coatings, and adhesives shall comply with UL 181, Class 1.

1) Fabric Minimum Weight: 26 oz./sq. yd..

2) Fabric Tensile Strength: 480 lbf/inch in the warp and 360 lbf/inch in the filling.

3) Fabric Service Temperature: Minus 40 to plus 200 deg F.

C. Plenum Fan Housings: Steel frame and panel; fabricated without fan scroll and volute housing.

D. Plenum, Centrifugal Fan Wheels: Smooth-curved inlet flange, backplate, and hollow die-formed airfoil-shaped blades continuously welded at tip flange and backplate; cast-iron or cast-steel hub riveted to backplate and fastened to shaft with set screws.

E. Fan Shaft Bearings:

1. Prelubricated and Sealed, Ball Bearings: Self-aligning, pillow-block type with a rated life of 250,000 hours according to ABMA 9.

F. Belt Drives: Factory mounted, with adjustable alignment and belt tensioning, and with 1.5 service factor based on fan motor.

1. Pulleys: Cast iron or cast steel with split, tapered bushing; dynamically balanced at factory.
2. Motor Pulleys: Adjustable pitch for use with 5 hp motors and smaller; fixed pitch for use with motors larger than 5 hp. Select pulley size so pitch adjustment is at the middle of adjustment range at fan design conditions.
3. Belts: Oil resistant, nonsparking, and nonstatic; in matched sets for multiple-belt drives.

G. Discharge Dampers: Heavy-duty steel assembly with channel frame and sealed ball bearings, and parallel blades constructed of two plates formed around and welded to shaft, with blades linked out of air stream to single control lever.

H. Internal Vibration Isolation: Fans shall be factory mounted with manufacturer's standard restrained vibration isolation mounting devices having a minimum static deflection of 1 inch.

I. Motor: Comply with NEMA designation, temperature rating, service factor, enclosure type, and efficiency requirements for motors specified in Division 23 Section "Common Motor Requirements for HVAC Equipment."

1. Enclosure Type: Totally enclosed, fan cooled.
2. NEMA Premium (TM) efficient motors as defined in NEMA MG 1.
3. Motor Sizes: Minimum size as indicated. If not indicated, large enough so driven load will not require motor to operate in service factor range above 1.0.
4. Controllers, Electrical Devices, and Wiring: Comply with requirements for electrical devices and connections specified in Division 26 Sections.
5. Mount unit-mounted disconnect switches on exterior of unit.

J. Variable Frequency Controllers:

1. Description: NEMA ICS 2, IGBT, PWM, VFC; listed and labeled as a complete unit and arranged to provide variable speed of an NEMA MG 1, Design B, 3-phase induction motor by adjusting output voltage and frequency.
2. Output Rating: 3-phase; 6 to 60 Hz, with voltage proportional to frequency throughout voltage range.
3. Unit Operating Requirements:
   a. Input ac voltage tolerance of 380 to 500 V, plus or minus 10 percent.
   b. Input frequency tolerance of 50/60 Hz, plus or minus 6 percent.
   c. Minimum Efficiency: 96 percent at 60 Hz, full load.
   d. Minimum Displacement Primary-Side Power Factor: 96 percent.
   e. Overload Capability: 1.1 times the base load current for 60 seconds; 2.0 times the base load current for 3 seconds.
   f. Starting Torque: 100 percent of rated torque or as indicated.
   g. Speed Regulation: Plus or minus 1 percent.
4. Isolated control interface to allow controller to follow control signal over an 11:1 speed range.
5. Internal Adjustability Capabilities:
   a. Minimum Speed: 5 to 25 percent of maximum rpm.
   b. Maximum Speed: 80 to 100 percent of maximum rpm.
   c. Acceleration: 2 to a minimum of 22 seconds.
   d. Deceleration: 2 to a minimum of 22 seconds.
   e. Current Limit: 50 to a minimum of 110 percent of maximum rating.
6. Self-Protection and Reliability Features:
   a. Undervoltage and overvoltage trips; inverter overtemperature, overload, and overcurrent trips.
   b. Notch filter to prevent operation of the controller-motor-load combination at a natural frequency of the combination.

c. Short-circuit protection.

7. Automatic Reset/Restart: Attempts three restarts after controller fault or on return of power after an interruption and before shutting down for manual reset or fault correction. Bidirectional autospeed search shall be capable of starting into rotating loads spinning in either direction and returning motor to set speed in proper direction, without damage to controller, motor, or load.

8. Motor Temperature Compensation at Slow Speeds: Adjustable current fall-back based on output frequency for temperature protection of self-cooled, fan-ventilated motors at slow speeds.

9. Door-mounted LED status lights shall indicate the following conditions:
   a. Power on.
   b. Run.
   c. Overvoltage.
   d. Line fault.
   e. Overcurrent.
   f. External fault.

10. Panel-Mounted Operator Station: Start-stop and auto-manual selector switches with manual-speed-control potentiometer and elapsed time meter.

11. Meters or digital readout devices and selector switch, mounted flush in controller door and connected to indicate the following controller parameters:
   a. Output frequency (Hertz).
   b. Motor speed (rpm).
   c. Motor status (running, stop, fault).
   d. Motor current (amperes).
   e. Motor torque (percent).
   f. Fault or alarming status (code).
   g. Proportional-integral-derivative (PID) feedback signal (percent).
   h. DC-link voltage (volts direct current).
   i. Set-point frequency (Hertz).
   j. Motor output voltage (volts).

12. Control Signal Interface:
   a. Electric Input Signal Interface: A minimum of 2 analog inputs (0 to 10 V or 0/4-20 mA) and 6 programmable digital inputs.
   b. Remote signal inputs capable of accepting any of the following speed-setting input signals from the control system:
      1) 0 to 10-V dc.
      2) 0-20 or 4-20 mA.
      3) Potentiometer using up/down digital inputs.
      4) Fixed frequencies using digital inputs.
      5) RS485.
      6) Keypad display for local hand operation.
   c. Output signal interface with a minimum of 1 analog output signal (0/4-20 mA), which can be programmed to any of the following:
      1) Output frequency (Hertz).
      2) Output current (load).
      3) DC-link voltage (volts direct current).
      4) Motor torque (percent).
      5) Motor speed (rpm).
      6) Set-point frequency (Hertz).
   d. Remote indication interface with a minimum of 2 dry circuit relay outputs (120-V ac, 1 A) for remote indication of the following:
      1) Motor running.
      2) Set-point speed reached.
      3) Fault and warning indication (overtemperature or overcurrent).
      4) High- or low-speed limits reached.

13. Communications: RS485 interface allows VFC to be used with an external system within a multidrop LAN configuration. Interface shall allow all parameter settings of VFC to be programmed via BMS control. Provide capability for VFC to retain these settings within the nonvolatile memory.

14. Integral Disconnecting Means: NEMA AB 1, instantaneous-trip circuit breaker with lockable handle.
15. Accessories:
    a. Devices shall be factory installed in controller enclosure unless otherwise indicated.
    b. Push-Button Stations, Pilot Lights, and Selector Switches: NEMA ICS 2, heavy-duty type.
    c. Standard Displays:
        1) Output frequency (Hertz).
        2) Set-point frequency (Hertz).
        3) Motor current (amperes).
        4) DC-link voltage (volts direct current).
        5) Motor torque (percent).
        6) Motor speed (rpm).
        7) Motor output voltage (volts).

2.4 COIL SECTION

A. General Requirements for Coil Section:
    1. Comply with ARI 410.
    2. Fabricate coil section to allow removal and replacement of coil for maintenance and to allow in-place access for service and maintenance of coil(s).
    3. For multizone units, provide air deflectors and air baffles to balance airflow across coils.
    4. Coils shall not act as structural component of unit.
    5. Seismic Fabrication Requirements: Fabricate coil section, internal mounting frame and attachment to coils, and other coil section components with reinforcement strong enough to withstand seismic forces defined in Division 23 Section "Vibration and Seismic Controls for HVAC Piping and Equipment" when coil-mounting frame and air-handling-unit mounting frame are anchored to building structure.

B. Hydronic Heating Coils, Controls, and Accessories: Comply with UL 1995.
    1. Casing Assembly: Flanged type with galvanized-steel frame.
    2. Overtemperature Protection: Disk-type, automatically resetting, thermal-cutout, safety device; serviceable through terminal box without removing heater from coil section.
    3. Secondary Protection: Load-carrying, manually resetting or manually replaceable, thermal cutouts; factory wired in series with each heater stage.
    4. Control Panel: Unit mounted with disconnecting means and overcurrent protection.
        a. Magnetic contactor.
        b. Solid-state, stepless pulse controller.
        c. Toggle switches, one per step.
        d. Step controller.
        e. Time-delay relay.
        f. Pilot lights, one per step.
        g. Airflow proving switch.

2.5 AIR FILTRATION SECTION

A. General Requirements for Air Filtration Section:
    1. Comply with NFPA 90A.
    2. Provide minimum arrestance according to ASHRAE 52.1, and a minimum efficiency reporting value (MERV) according to ASHRAE 52.2.
    3. Provide filter holding frames arranged for flat or angular orientation, with access doors on both sides of unit. Filters shall be removable from one side or lifted out from access plenum.

B. Disposable Panel Filters:
    1. Factory-fabricated, viscous-coated, flat-panel type.
    2. Thickness: 2inch.
    3. Initial Resistance: 0.6 in H20.
    4. Media: Interlaced glass fibers sprayed with nonflammable adhesive.
    5. Frame: Galvanized steel, with metal grid on outlet side, steel rod grid on inlet side, hinged, and with pull and retaining handles.

2.6 DAMPERS

A. General Requirements for Dampers: Leakage rate, according to AMCA 500, "Laboratory Methods for Testing Dampers for Rating," shall not exceed 2 percent of air quantity at 2000-fpm face velocity through damper.

B. Electronic Damper Operators:
   1. Direct-coupled type designed for minimum 60,000 full-stroke cycles at rated torque.
   2. Electronic damper position indicator shall have visual scale indicating percent of travel and 2- to 10-V dc, feedback signal.
   3. Operator Motors:
      a. Comply with NEMA designation, temperature rating, service factor, enclosure type, and efficiency requirements for motors specified in Division 23 Section "Common Motor Requirements for HVAC."
      b. Size to operate with sufficient reserve power to provide smooth modulating action or two-position action.
      c. Permanent Split-Capacitor or Shaded-Pole Type: Gear trains completely oil immersed and sealed. Equip spring-return motors with integral spiral-spring mechanism in housings designed for easy removal for service or adjustment of limit switches, auxiliary switches, or feedback potentiometer.
   4. Nonspring-Return Motors for Dampers Larger Than 25 Sq. Ft.: Size for running torque of 150 in. x lbf and breakaway torque of 300 in. x lbf.
   5. Spring-Return Motors for Dampers Larger Than 25 Sq. Ft.: Size for running and breakaway torque of 150 in. x lbf.
   6. Size dampers for running torque calculated as follows:
      a. Parallel-Blade Damper with Edge Seals: 7 inch-lb/sq. ft. of damper.
      b. Opposed-Blade Damper with Edge Seals: 5 inch-lb/sq. ft. of damper.
      c. Parallel-Blade Damper without Edge Seals: 4 inch-lb/sq. ft of damper.
      d. Opposed-Blade Damper without Edge Seals: 3 inch-lb/sq. ft. of damper.
      e. Dampers with 2- to 3-Inch wg of Pressure Drop or Face Velocities of 1000 to 2500 fpm: Increase running torque by 1.5.
      f. Dampers with 3- to 4-Inch wg of Pressure Drop or Face Velocities of 2500 to 3000 fpm: Increase running torque by 2.0.
   7. Coupling: V-bolt and V-shaped, toothed cradle.
   8. Overload Protection: Electronic overload or digital rotation-sensing circuitry.
   9. Fail-Safe Operation: Mechanical, spring-return mechanism with external, manual gear release on nonspring-return actuators.
   10. Power Requirements (Two-Position Spring Return): -V ac.
   11. Power Requirements (Modulating): Maximum 10 VA at 24-V ac or 8 W at 24-V dc.
   12. Proportional Signal: 2- to 10-V dc or 4 to 20 mA, and 2- to 10-V dc position feedback signal.
   13. Temperature Rating: 40 to 104 deg F.

C. Pneumatic Damper Operators:
   1. Rolling-diaphragm piston type with adjustable stops and spring return, sized to operate with sufficient reserve power to provide smooth modulating action or two-position action. Where actuators operate in sequence, provide pilot positioners.
   2. Pneumatic Damper Position Indicator: Potentiometer mounted in enclosure with adjustable crank-arm assembly connected to damper to transmit 0 to 100 percent valve/damper travel.
   3. Pilot Positioners:
      a. Start Point: Adjustable from 2 to 12 psig.
      b. Operating Span: Adjustable from 5 to 13 psig.
      c. Linearity: Plus or minus 10 percent of output signal span.
      d. Hysteresis: 3 percent of span.
      e. Response: 0.25-psig input change.
      f. Maximum Pilot Signal Pressure: 20 psig.
      g. Maximum Control Air-Supply Pressure: 60 psig.
   4. Actuator Housing: Molded or die-cast zinc or aluminum.

5. Inlet-Vane Operators: High pressure, with pilot positioners.

D. Outdoor- and Return-Air Mixing Dampers: Parallel-blade, galvanized-steel dampers mechanically fastened to steel operating rod in reinforced cabinet. Connect operating rods with common linkage and interconnect linkages so dampers operate simultaneously.

E. Outdoor- and Return-Air Dampers: Low-leakage, double-skin, airfoil-blade, galvanized-steel dampers with compressible jamb seals and extruded-vinyl blade edge seals in parallel-blade arrangement with steel operating rods rotating in stainless steel bearings mounted in a single galvanized-steel frame, and with operating rods connected with a common linkage. Leakage rate shall not exceed 5 cfm/sq. ft. at 1-inch wg and 9 cfm/sq. ft. at 4-inch wg.

F. Mixing Section: Multiple-blade, air-mixer assembly located immediately downstream of mixing section.

G. Combination Filter and Mixing Section:

1. Cabinet support members shall hold 2-inch-thick, pleated, flat, permanent or throwaway filters.
2. Multiple-blade, air-mixer assembly shall mix air to prevent stratification, located immediately downstream of mixing box.

2.7 HUMIDIFIERS

A. Integral Evaporative Humidifier Section:

1. Access Door: Watertight cast iron with brass fittings, wire glass window, and locking handles.
2. Spray Tree Assembly: Brass nozzles and galvanized piping, galvanized eliminator plates with flooding nozzles and header, and galvanized antisplash baffles.
3. Insulation: Insulate with duct insulation on exterior and mount on 2-inch-thick, rigid insulation board.

2.8 SOURCE QUALITY CONTROL

A. Fan Sound-Power Level Ratings: Comply with AMCA 301, "Methods for Calculating Fan Sound Ratings from Laboratory Test Data." Test fans according to AMCA 300, "Reverberant Room Method for Sound Testing of Fans." Fans shall bear AMCA-certified sound ratings seal.

B. Fan Performance Rating: Factory test fan performance for airflow, pressure, power, air density, rotation speed, and efficiency. Rate performance according to AMCA 210, "Laboratory Methods of Testing Fans for Aerodynamic Performance Rating."

C. Water Coils: Factory tested to 300 psig according to ARI 410 and ASHRAE 33.

D. Steam Coils: Factory tested to 300 psig and to 200 psig under water according to ARI 410 and ASHRAE 33.

E. Refrigerant Coils: Factory tested to 450 psig according to ARI 410 and ASHRAE 33.

PART 3 EXECUTION

3.1 EXAMINATION

A. Examine areas and conditions, with Installer present, for compliance with requirements for installation tolerances and other conditions affecting performance of the Work.

B. Examine casing insulation materials and filter media before air-handling unit installation. Reject insulation materials and filter media that are wet, moisture damaged, or mold damaged.

C. Examine roughing-in for steam, hydronic, and condensate drainage piping systems and electrical services to verify actual locations of connections before installation.

D. Proceed with installation only after unsatisfactory conditions have been corrected.

3.2 INSTALLATION

A. Equipment Mounting: Install air-handling units on concrete bases using elastomeric pads. Secure units to anchor bolts installed in concrete bases. Comply with requirements for vibration isolation devices specified in Division 23 Section "Vibration and Seismic Controls for HVAC Piping and Equipment."

1. Minimum Deflection: 1/2 inch.
2. Install galvanized-steel plate to equally distribute weight over elastomeric pad.

3. Install dowel rods to connect concrete base to concrete floor. Unless otherwise indicated, install dowel rods on 18-inch centers around the full perimeter of concrete base.
4. Install epoxy-coated anchor bolts that extend through concrete base and anchor into structural concrete floor.
5. Place and secure anchorage devices. Use setting drawings, templates, diagrams, instructions, and directions furnished with items to be embedded.
6. Install anchor bolts to elevations required for proper attachment to supported equipment.

B. Equipment Mounting: Install air-handling unit using elastomeric pads. Comply with requirements for vibration isolation devices specified in Division 23 Section "Vibration and Seismic Controls for HVAC Piping and Equipment."
1. Minimum Deflection: 1/4 inch
2. Install galvanized-steel plate to equally distribute weight over elastomeric pad.

C. Arrange installation of units to provide access space around air-handling units for service and maintenance.

D. Do not operate fan system until filters (temporary or permanent) are in place. Replace temporary filters used during construction and testing, with new, clean filters.

E. Install filter-gage, static-pressure taps upstream and downstream of filters. Mount filter gages on outside of filter housing or filter plenum in accessible position. Provide filter gages on filter banks, installed with separate static-pressure taps upstream and downstream of filters.

3.3 CONNECTIONS

A. Comply with requirements for piping specified in other Division 23 Sections. Drawings indicate general arrangement of piping, fittings, and specialties.

B. Install piping adjacent to air-handling unit to allow service and maintenance.

C. Connect piping to air-handling units mounted on vibration isolators with flexible connectors.

D. Connect condensate drain pans using NPS 1-1/4 ASTM B 88, Type M copper tubing. Extend to nearest equipment or floor drain. Construct deep trap at connection to drain pan and install cleanouts at changes in direction.

E. Hot- and Chilled-Water Piping: Comply with applicable requirements in Division 23 Section "Hydronic Piping." Install shutoff valve and union or flange at each coil supply connection. Install balancing valve and union or flange at each coil return connection.

F. Refrigerant Piping: Comply with applicable requirements in Division 23 Section "Refrigerant Piping." Install shutoff valve and union or flange at each supply and return connection.

G. Connect duct to air-handling units with flexible connections. Comply with requirements in Division 23 Section "Air Duct Accessories."

3.4 FIELD QUALITY CONTROL

A. Manufacturer's Field Service: Engage a factory-authorized service representative to inspect, test, and adjust components, assemblies, and equipment installations, including connections.

B. Perform tests and inspections.
1. Manufacturer's Field Service: Engage a factory-authorized service representative to inspect components, assemblies, and equipment installations, including connections, and to assist in testing.

C. Tests and Inspections:
1. Leak Test: After installation, fill water and steam coils with water, and test coils and connections for leaks.
2. Charge refrigerant coils with refrigerant and test for leaks.
3. Fan Operational Test: After electrical circuitry has been energized, start units to confirm proper motor rotation and unit operation.
4. Automatic-Roll-Filter Operational Test: Operate filters to demonstrate compliance with requirements. Test for leakage of unfiltered air while system is operating.
5. HEPA-Filter Operational Test: Pressurize housing to a minimum of 3-inch wg or to designed operating pressure, whichever is higher; test housing joints, door seals, and sealing edges of filter with soapy water to check for air leaks.

6. HEPA-Filter Operational Test: Pressurize housing to a minimum of 3-inch wg or to designed operating pressure, whichever is higher; test housing joints, door seals, and sealing edges of filter for air leaks according to ASME N510, pressure-decay method.
7. Test and adjust controls and safeties. Replace damaged and malfunctioning controls and equipment.

D. Air-handling unit or components will be considered defective if unit or components do not pass tests and inspections.

E. Prepare test and inspection reports.

3.5 STARTUP SERVICE

A. Engage a factory-authorized service representative to perform startup service.
1. Complete installation and startup checks according to manufacturer's written instructions.
2. Verify that shipping, blocking, and bracing are removed.
3. Verify that unit is secure on mountings and supporting devices and that connections to piping, ducts, and electrical systems are complete. Verify that proper thermal-overload protection is installed in motors, controllers, and switches.
4. Verify proper motor rotation direction, free fan wheel rotation, and smooth bearing operations. Reconnect fan drive system, align belts, and install belt guards.
5. Verify that bearings, pulleys, belts, and other moving parts are lubricated with factory-recommended lubricants.
6. Verify that zone dampers fully open and close for each zone.
7. Verify that face-and-bypass dampers provide full face flow.
8. Verify that outdoor- and return-air mixing dampers open and close, and maintain minimum outdoor-air setting.
9. Comb coil fins for parallel orientation.
10. Verify that proper thermal-overload protection is installed for electric coils.
11. Install new, clean filters.
12. Verify that manual and automatic volume control and fire and smoke dampers in connected duct systems are in fully open position.

B. Starting procedures for air-handling units include the following:
1. Energize motor; verify proper operation of motor, drive system, and fan wheel. Adjust fan to indicated rpm. Replace fan and motor pulleys as required to achieve design conditions.
2. Measure and record motor electrical values for voltage and amperage.
3. Manually operate dampers from fully closed to fully open position and record fan performance.

3.6 ADJUSTING

A. Adjust damper linkages for proper damper operation.

B. Comply with requirements in Division 23 Section "Testing, Adjusting, and Balancing for HVAC" for air-handling system testing, adjusting, and balancing.

3.7 CLEANING

A. After completing system installation and testing, adjusting, and balancing air-handling unit and air-distribution systems and after completing startup service, clean air-handling units internally to remove foreign material and construction dirt and dust. Clean fan wheels, cabinets, dampers, coils, and filter housings, and install new, clean filters.

END OF SECTION 237313

SECTION 238126.13 - DUCTLESS SPLIT FAN COIL

PART 1 PRODUCT DESCRIPTION

1.1 DUCTLESS SPLIT FAN COIL UNIT WITH NOMINAL COOLING CAPACITY RANGES FROM 5,300 BTU/H TO 96,000 BTU/H (MODEL DEPENDENT)

A. All fan coil units shall be available as ducted, ductless or a combination of both, and shall be complete with factory mounted controls, fans, coils, electronic expansion valves (EEVs), condensate drain pans, condensate drain lift pumps (selected models) filter racks, return air temperature sensors, refrigerant pipe temperature sensors and wiring terminal blocks. The units shall have multiple-speed constant-flow fan assemblies with direct drive digitally commutated BLDC motors.

B. All indoor fan coil units shall be capable of real-time response and communication from smart load control and/or flexible capacity control commands and re-set as required super-heat, sub-cooling, sensible heat ratio, total coil capacity and fan control when requested by main processor Indoor units shall provide capacity verses implied load status information.

C. All indoor fan coil units shall be factory equipped with a single set of configurable dry contacts for use with integration of other controls, control of remote devices or to be controlled by other devices. Indoor fan coil units shall be capable of being controlled by, but not limited to, all zone controllers, wireless zone controllers and all commonly available automatic or manual thermostats equipped with (or without) Wi-Fi capabilities (thermostat dry contact option required).

D. All indoor unit coils shall pressure tested with dry nitrogen to a minimum of 500 psi in the field, coils and indoor units containing coils not rated for 500 psi or more shall not be permitted.

E. The entirety of this indoor unit specification and unit options define the minimum acceptable VRF indoor unit requirements for this project. All indoor units provided shall include all features and capabilities.

PART 2 STANDARDS/SPECIFICATIONS

2.1 VRF INDOOR FAN COIL UNIT COMPONENTS SHALL BE MANUFACTURED IN PRODUCTION FACILITIES MAINTAINING THE FOLLOWING ISO CERTIFICATIONS:

A. ISO 9001 Quality Management System

B. ISO14001 Environmental Management System

2.2 ALL WIRING SHALL BE IN ACCORDANCE WITH THE NATIONAL ELECTRIC CODE (NEC) AND CANADIAN ELECTRICAL CODE (CEC).

A. Indoor fan coil unit components shall comply with Underwriters Laboratories (UL) 1995 Heating and Cooling Equipment Standard for Safety and bear the Intertek Electrical Testing Laboratories (ETL) mark.

2.3 DESIGN BASIS

1. All bidders shall furnish the minimum system standards as defined by the base bid model numbers, model families or as otherwise specified herein. In any event the contractor shall be responsible for all specified items and intents of this document without further compensation.

PART 3 CLOSEOUT SUBMITTALS

3.1 OPERATION AND MAINTENANCE DATA. PROVIDE OWNER WITH PROJECT SPECIFIC OPERATION AND MAINTENANCE MANUAL IN ELECTRONIC AND HARD COPY. HARD COPY SHALL BE BOUND TOGETHER WITH ALL OTHER HVAC EQUIPMENT.

PART 4 PRODUCTS

4.1 INDOOR UNITS:

A. Wall Mounted – Standard
1. Wall Mounted – Standard
a. General:
1) Unit shall be designed to be installed for indoor application.
2) Unit shall be attached to an installation plate/bracket that secures unit to the wall.
3) The depth of the unit shall not exceed 10 inches.
b. Casing/Panel
1) Unit case shall be manufactured using Acrylonitrile Butadiene Styrene (ABS) polymeric resin and has a pearl white finish designed for mounting on a vertical surface and include an installation mounting template, guild and separate hanging bracket.
c. Cabinet Assembly:
1) Unit shall have one supply air outlet and one return air inlet with a manual or motorized sweeping guide vane that automatically changes the direction of airflow from side-to-side and up-and-down.
2) Unit shall be equipped with factory installed temperature thermistors for:
(a) Return air
(b) Refrigerant entering coil
(c) Refrigerant leaving coil
3) Unit shall have a factory assembled, piped and wired electronic expansion valve (EEV) for refrigerant control.
4) Unit shall have a built-in control panel to communicate with other indoor units and to the outdoor unit.
5) Unit shall have the following functions as standard:
(a) Self-diagnostic function
(1) Auto addressing
(2) Auto restart function
(3) Auto changeover function (Heat Recovery system only)
(4) Auto operation function
(5) Auto clean function
(6) Child lock function
(7) Forced operation
(8) Dual thermistor control
(9) Sleep mode
(10) Dual set point control
(11) Filter life timer
(12) Power consumption data
(13) External on/off control input
6) Unit shall be capable of refrigerant piping in four different directions.
7) Unit shall be capable of drain piping in two different directions.
d. Fan Assembly:
1) The unit shall have a single, direct driven crossflow tangential Sirocco fan made of high strength ABS BSN-7530 polymeric resin.
2) The fan impeller shall be statically and dynamically balanced.
3) The fan motor is Brushless Digitally commutated (BLDC) with permanently lubricated and sealed ball bearings.

4) The fan motor shall include thermal, overcurrent and low RPM protection.
5) The fan/motor assembly shall be mounted on vibration attenuating rubber grommets.
6) The fan speed shall be controlled using microprocessor based direct digitally controlled algorithm that provides a minimum of three pre-programed fan speeds in the heating mode and fan only mode and four speeds in the cooling mode. The fan speed algorithm provides a field selectable fixed speed.
7) In cooling mode, the indoor fan shall have the following settings: Low, Med, High, Power Cool, and Auto.
8) In heating mode, the indoor fan shall have the following settings: Low, Med, High, and Auto.
9) Unit shall have factory installed motorized louver to provide flow of air in up and down direction for uniform airflow.
10) Unit shall have factory installed motorized guide vane to control the direction of flow of air from side to side.

e. E. Filter Assembly:
1) The return air inlet shall have a factory supplied removable, washable filter
2) The filter access shall be from the front of the unit without the need of tools.

f. F. Coil Assembly:
1) Unit shall have a factory built coil comprised of aluminum fins mechanically bonded on copper tubing.
2) The copper tubing shall have inner grooves to expand the refrigerant contact surface for high efficiency heat exchanger operation.
3) Unit shall have a minimum two row coil, 18 fins per inch.
4) Unit shall have a factory supplied condensate drain pan below the coil constructed of EPS (expandable polystyrene resin).
5) Unit shall be designed for gravity drain.
6) Unit shall have a 5/8” inside diameter factory insulated drain hose to handle condensate.
7) Unit shall have provision of 45° flare refrigerant pipe connections.
8) The coil shall be factory pressure tested at a minimum of 551 psig.
9) All refrigerant piping from outdoor unit to indoor unit shall be field insulated. Each pipe should be insulated separately.
10) Thickness and heat transfer characteristics shall be determined by the design engineer and shall meet all code requirements.

g. G. Microprocessor Control:
1) The unit shall have a factory installed microprocessor controller capable of performing functions necessary to operate the system with or without the use of a wall mounted zone controller. The unit shall have a factory mounted return air thermistor for use as a space temperature control device. All operating parameters except scheduling shall be stored in non-volatile memory resident on the microprocessor. The microprocessor shall provide the following functions, self-diagnostics, auto re-start after a power failure and a test run mode.
2) The unit shall be able to communicate with other indoor units and the outdoor unit using a field supplied minimum of 18 AWG, two core stranded, twisted, and shielded communication cable (RS-485).
3) The unit controls shall operate the indoor unit using one of the five operating modes:
(a) Auto changeover (Heat Recovery System only)
(b) Heating
(c) Cooling
(d) Dry
(e) Fan only
4) The unit shall be able to operate in either cooling or heating mode for testing and/or commissioning.
5) The unit shall have adjustable, multi-step cooling and heating mode thermal on/off temperature range settings.
6) The system shall include a product check function to access and display indoor unit type and capacity from a wired programmable thermostat controller.
7) Unit shall have a field settable method to choose auto fan speed change operation based on mode of operation, on/off fan operation based on mode of operation, or continuous minimum set fan speed operation.

h. Electrical:
   1) The unit electrical power shall be 208-230/1/60 (V/Ph./Hz).
   2) The unit shall be capable of operating within voltage limits of +/- 10% of the rated voltage.

i. Controls:
   1) Unit shall use controls provided by the manufacturer to perform all functions necessary to operate the system effectively and efficiently and communicate with the outdoor unit over an RS485 daisy chain.

END OF SECTION

SECTION 260010 - SUPPLEMENTAL REQUIREMENTS FOR ELECTRICAL

PART 1 GENERAL

1.1 SUMMARY

A. This Section specifies supplemental requirements generally applicable to the Work specified in Division 26. This Section is also referenced by related Work specified in other Divisions.

B. Related Requirements:

1. Section 260011 "Facility Performance Requirements for Electrical" specifies seismic-load, wind-load, acoustical, and other field conditions applicable to Work specified in this Section.

1.2 REFERENCES

A. Abbreviations and Acronyms for Electrical Terms and Units of Measure:

1. 8P8C: An 8-position 8-contact modular jack.
2. A: Ampere, unit of electrical current.
3. AC or ac: Alternating current.
4. AFCI: Arc-fault circuit interrupter.
5. AIC: Ampere interrupting capacity.
6. AL, Al, or ALUM: Aluminum.
7. ASD: Adjustable-speed drive; also called variable-frequency drive (VFD).
8. ATS: Automatic transfer switch.
9. AWG: American wire gauge; see ASTM B258.
10. BAS: Building automation system.
11. BIL: Basic impulse insulation level.
12. BIM: Building information modeling.
13. CAD: Computer-aided design or drafting.
14. CATV: Community antenna television.
15. CB: Circuit breaker.
16. cd: Candela, the SI fundamental unit of luminous intensity.
17. CO/ALR: Copper-aluminum, revised.
18. COPS: Critical operations power system.
19. CU or Cu: Copper.
20. CU-AL or AL-CU: Copper-aluminum.
21. dB: Decibel, a unitless logarithmic ratio of two electrical, acoustical, or optical power values.
22. dB(A-weighted) or dB(A): Decibel acoustical sound pressure level with A-weighting applied in accordance with IEC 61672-1.
23. dB(adjusted) or dBa: Decibel weighted absolute noise power with respect to 3.16 pW (minus 85 dBm).
24. dBm: Decibel absolute power with respect to 1 mW.
25. DC or dc: Direct current.
26. DCOA: Designated critical operations area.
27. DDC: Direct digital control (HVAC).
28. EGC: Equipment grounding conductor.
29. ELV: Extra-low voltage.
30. EMF: Electromotive force.
31. EMI: Electromagnetic interference.
32. EPM: Electrical preventive maintenance.
33. EPS: Emergency power supply.
34. EPSS: Emergency power supply system.
35. ESS: Energy storage system.
36. EV: Electric vehicle.

37. EVPE: Electric vehicle power export equipment.
38. EVSE: Electric vehicle supply equipment.
39. fc: Footcandle, an internationally recognized unit of illuminance equal to one lumen per square foot or 10.76 lx. The simplified conversion 1 fc = 10 lx in the Specifications is common practice and considered adequate precision for building construction activities. When there are conflicts, lux is the primary unit; footcandle is specified for convenience.
40. FLC: Full-load current.
41. ft: Foot.
42. ft-cd: Foot-candle, the antiquated U.S. Standard unit of illuminance, equal to one international candle measured at a distance of one foot, that was superseded in 1948 by the unit "footcandle" after the SI unit candela (cd) replaced the international candle; see "fc,"
43. GEC: Grounding electrode conductor.
44. GFCI: Ground-fault circuit interrupter.
45. GFPE: Ground-fault protection of equipment.
46. GND: Ground.
47. HACR: Heating, air conditioning, and refrigeration.
48. HDPE: High-density polyethylene.
49. HID: High-intensity discharge.
50. HP or hp: Horsepower.
51. HVAC: Heating, ventilating, and air conditioning.
52. Hz: Hertz.
53. IBT: Intersystem bonding termination.
54. inch: Inch. To avoid confusion, the abbreviation "in." is not used.
55. IP: Ingress protection rating (enclosures); Internet protocol (communications).
56. IR: Infrared.
57. IS: Intrinsically safe.
58. IT&R: Inspecting, testing, and repair.
59. ITE: Information technology equipment.
60. kAIC: Kiloampere interrupting capacity.
61. kcmil or MCM: One thousand circular mils.
62. kV: Kilovolt.
63. kVA: Kilovolt-ampere.
64. kVAr or kVAR: Kilovolt-ampere reactive.
65. kW: Kilowatt.
66. kWh: Kilowatt-hour.
67. LAN: Local area network.
68. lb: Pound (weight).
69. lbf: Pound (force).
70. LCD: Liquid-crystal display.
71. LCDI: Leakage-current detector-interrupter.
72. LED: Light-emitting diode.
73. Li-ion: Lithium-ion.
74. lm: Lumen, the SI derived unit of luminous flux.
75. LNG: Liquefied natural gas.
76. LP-Gas: Liquefied petroleum gas.
77. LRC: Locked-rotor current.
78. LV: Low voltage.
79. lx: Lux, the SI derived unit of illuminance equal to one lumen per square meter.
80. m: Meter.
81. MCC: Motor-control center.
82. MDC: Modular data center.
83. MG set: Motor-generator set.
84. MIDI: Musical instrument digital interface.

85. MLO: Main lugs only.
86. MV: Medium voltage.
87. MVA: Megavolt-ampere.
88. mW: Milliwatt.
89. MW: Megawatt.
90. MWh: Megawatt-hour.
91. NC: Normally closed.
92. Ni-Cd: Nickel-cadmium.
93. Ni-MH: Nickel-metal hydride.
94. NIU: Network interface unit.
95. NO: Normally open.
96. NPT: National (American) standard pipe taper.
97. OCPD: Overcurrent protective device.
98. ONT: Optical network terminal.
99. PC: Personal computer.
100. PCS: Power conversion system.
101. PCU: Power-conditioning unit.
102. PF or pf: Power factor.
103. PHEV: Plug-in hybrid electric vehicle.
104. PLC: Programmable logic controller.
105. PLFA: Power-limited fire alarm.
106. PoE: Power over Ethernet.
107. PV: Photovoltaic.
108. PVC: Polyvinyl chloride.
109. pW: Picowatt.
110. RFI: (electrical) Radio-frequency interference; (contract) Request for interpretation.
111. RMS or rms: Root-mean-square.
112. RPM or rpm: Revolutions per minute.
113. SCADA: Supervisory control and data acquisition.
114. SCR: Silicon-controlled rectifier.
115. SPD: Surge protective device.
116. sq.: Square.
117. SWD: Switching duty.
118. TCP/IP: Transmission control protocol/Internet protocol.
119. TEFC: Totally enclosed fan-cooled.
120. TR: Tamper resistant.
121. TVSS: Transient voltage surge suppressor.
122. UL: (standards) Underwriters Laboratories, Inc.; (product categories) UL, LLC.
123. UL CCN: UL Category Control Number.
124. UPS: Uninterruptible power supply.
125. USB: Universal serial bus.
126. UV: Ultraviolet.
127. V: Volt, unit of electromotive force.
128. V(ac): Volt, alternating current.
129. V(dc): Volt, direct current.
130. VA: Volt-ampere, unit of complex electrical power.
131. VAR: Volt-ampere reactive, unit of reactive electrical power.
132. VFC: Variable-frequency controller.
133. VOM: Volt-ohm-multimeter.
134. VPN: Virtual private network.
135. VRLA: Valve regulated lead acid; also called "sealed lead acid (SLA)" or "valve regulated sealed lead acid."

136. W: Watt, unit of real electrical power.
137. Wh: Watt-hour, unit of electrical energy usage.
138. WPT: Wireless power transfer.
139. WPTE: Wireless power transfer equipment.
140. WR: Weather resistant.

B. Abbreviations and Acronyms for Electrical Raceway Types:
1. CR: Communications raceway.
2. CR-GP: General-purpose communications raceway.
3. CR-P: Plenum communications raceway.
4. CR-R: Riser communications raceway.
5. EMT: Electrical metallic tubing.
6. EMT-A: Aluminum electrical metallic tubing.
7. EMT-S: Steel electrical metallic tubing.
8. EMT-SS: Stainless steel electrical metallic tubing.
9. ENT: Electrical nonmetallic tubing.
10. EPEC: Electrical HDPE underground conduit (thin wall).
11. EPEC-A: Type A electrical HDPE underground conduit.
12. EPEC-B: Type B electrical HDPE underground conduit.
13. ERMC: Electrical rigid metal conduit.
14. ERMC-A: Aluminum electrical rigid metal conduit.
15. ERMC-S: Steel electrical rigid metal conduit.
16. ERMC-S-G: Galvanized-steel electrical rigid metal conduit.
17. ERMC-S-PVC: PVC-coated-steel electrical rigid metal conduit.
18. ERMC-SS: Stainless steel electrical rigid metal conduit.
19. FMC: Flexible metal conduit.
20. FMC-A: Aluminum flexible metal conduit.
21. FMC-S: Steel flexible metal conduit.
22. FMT: Steel flexible metallic tubing.
23. FNMC: Flexible nonmetallic conduit. See "LFNC."
24. HDPE: HDPE underground conduit (thick wall).
25. HDPE-40: Schedule 40 HDPE underground conduit.
26. HDPE-80: Schedule 80 HDPE underground conduit.
27. IMC: Steel electrical intermediate metal conduit.
28. LFMC: Liquidtight flexible metal conduit.
29. LFMC-A: Aluminum liquidtight flexible metal conduit.
30. LFMC-S: Steel liquidtight flexible metal conduit.
31. LFMC-SS: Stainless steel liquidtight flexible metal conduit.
32. LFNC: Liquidtight flexible nonmetallic conduit.
33. LFNC-A: Layered (Type A) liquidtight flexible nonmetallic conduit.
34. LFNC-B: Integral (Type B) liquidtight flexible nonmetallic conduit.
35. LFNC-C: Corrugated (Type C) liquidtight flexible nonmetallic conduit.
36. PVC: Rigid PVC conduit.
37. PVC-40: Schedule 40 rigid PVC conduit.
38. PVC-80: Schedule 80 rigid PVC Conduit.
39. PVC-A: Type A rigid PVC concrete-encased conduit.
40. PVC-EB: Type EB rigid PVC concrete-encased underground conduit.
41. RGS: See ERMC-S-G.
42. RMC: See ERMC.
43. RTRC: Reinforced thermosetting resin conduit.
44. RTRC-AG: Low-halogen, aboveground reinforced thermosetting resin conduit.
45. RTRC-AG-HW: Heavy wall, low-halogen, aboveground reinforced thermosetting resin conduit.
46. RTRC-AG-SW: Standard wall, low-halogen, aboveground reinforced thermosetting resin conduit.

47. RTRC-AG-XW: Extra heavy wall, low-halogen, aboveground reinforced thermosetting resin conduit.
48. RTRC-BG: Low-halogen, belowground reinforced thermosetting resin conduit.

C. Abbreviations and Acronyms for Electrical Single-Conductor and Multiple-Conductor Cable Types:
1. AC: Armored cable.
2. CATV: Coaxial general-purpose cable.
3. CATVP: Coaxial plenum cable.
4. CATVR: Coaxial riser cable.
5. CI: Circuit integrity cable.
6. CL2: Class 2 cable.
7. CL2P: Class 2 plenum cable.
8. CL2R: Class 2 riser cable.
9. CL2X: Class 2 cable, limited use.
10. CL3: Class 3 cable.
11. CL3P: Class 3 plenum cable.
12. CL3R: Class 3 riser cable.
13. CL3X: Class 3 cable, limited use.
14. CM: Communications general-purpose cable.
15. CMG: Communications general-purpose cable.
16. CMP: Communications plenum cable.
17. CMR: Communications riser cable.
18. CMUC: Under-carpet communications wire and cable.
19. CMX: Communications cable, limited use.
20. DG: Distributed generation cable.
21. FC: Flat cable.
22. FCC: Flat conductor cable.
23. FPL: Power-limited fire-alarm cable.
24. FPLP: Power-limited fire-alarm plenum cable.
25. FPLR: Power-limited fire-alarm riser cable.
26. IGS: Integrated gas spacer cable.
27. ITC: Instrumentation tray cable.
28. ITC-ER: Instrumentation tray cable, exposed run.
29. MC: Metal-clad cable.
30. MC-HL: Metal-clad cable, hazardous location.
31. MI: Mineral-insulated, metal-sheathed cable.
32. MTW: (machine tool wiring) Moisture-, heat-, and oil-resistant thermoplastic cable.
33. MV: Medium-voltage cable.
34. NM: Nonmetallic sheathed cable.
35. NMC: Nonmetallic sheathed cable with corrosion-resistant nonmetallic jacket.
36. NMS: Nonmetallic sheathed cable with signaling, data, and communications conductors, plus power or control conductors.
37. NPLF: Non-power-limited fire-alarm circuit cable.
38. NPLFP: Non-power-limited fire-alarm circuit cable for environmental air spaces.
39. NPLFR: Non-power-limited fire-alarm circuit riser cable.
40. NUCC: Nonmetallic underground conduit with conductors.
41. OFC: Conductive optical fiber general-purpose cable.
42. OFCG: Conductive optical fiber general-purpose cable.
43. OFCP: Conductive optical fiber plenum cable.
44. OFCR: Conductive optical fiber riser cable.
45. OFN: Nonconductive optical fiber general-purpose cable.
46. OFNG: Nonconductive optical fiber general-purpose cable.
47. OFNP: Nonconductive optical fiber plenum cable.
48. OFNR: Nonconductive optical fiber riser cable.

49. P: Marine shipboard cable.
50. PLTC: Power-limited tray cable.
51. PLTC-ER: Power-limited tray cable, exposed run.
52. PV: Photovoltaic cable.
53. RHH: (high heat) Thermoset rubber, heat-resistant cable.
54. RHW: Thermoset rubber, moisture-resistant cable.
55. SA: Silicone rubber cable.
56. SE: Service-entrance cable.
57. SER: Service-entrance cable, round.
58. SEU: Service-entrance cable, flat.
59. SIS: Thermoset cable for switchboard and switchgear wiring.
60. TBS: Thermoplastic cable with outer braid.
61. TC: Tray cable.
62. TC-ER: Tray cable, exposed run.
63. TC-ER-HL: Tray cable, exposed run, hazardous location.
64. THW: Thermoplastic, heat- and moisture-resistant cable.
65. THHN: Thermoplastic, heat-resistant cable with nylon jacket outer sheath.
66. THHW: Thermoplastic, heat- and moisture-resistant cable.
67. THWN: Thermoplastic, moisture- and heat-resistant cable with nylon jacket outer sheath.
68. TW: Thermoplastic, moisture-resistant cable.
69. UF: Underground feeder and branch-circuit cable.
70. USE: Underground service-entrance cable.
71. XHH: Cross-linked polyethylene, heat-resistant cable.
72. XHHW: Cross-linked polyethylene, heat- and moisture-resistant cable.

D. Abbreviations and Acronyms for Electrical Flexible Cord Types:
1. SEO: 600 V extra-hard-usage, hard-service cord with thermoplastic elastomer insulation and oil-resistant thermoplastic elastomer outer covering for damp locations.
2. SEOW: 600 V extra-hard-usage, hard-service cord with thermoplastic elastomer insulation and oil-resistant thermoplastic elastomer outer covering for damp or wet locations.
3. SEOO: 600 V extra-hard-usage, hard-service cord with oil-resistant thermoplastic elastomer insulation and oil-resistant thermoplastic elastomer outer covering for damp locations.
4. SEOOW: 600 V extra-hard-usage, hard-service cord with oil-resistant thermoplastic elastomer insulation and oil-resistant thermoplastic elastomer outer covering for damp or wet locations.
5. SJEO: 300 V hard-usage, junior hard-service cord with thermoplastic elastomer insulation and oil-resistant thermoplastic elastomer outer cover for damp locations.
6. SJEOW: 300 V hard-usage, junior hard-service cord with thermoplastic elastomer insulation and oil-resistant thermoplastic elastomer outer cover for damp or wet locations.
7. SJEOO: 300 V hard-usage, junior hard-service cord with oil-resistant thermoplastic elastomer insulation and oil-resistant thermoplastic elastomer outer cover for damp locations.
8. SJEOOW: 300 V hard-usage, junior hard-service cord with oil-resistant thermoplastic elastomer insulation and oil-resistant thermoplastic elastomer outer cover for damp or wet locations.
9. SJO: 300 V hard-usage, junior hard-service cord with thermoset insulation and oil-resistant thermoset outer cover for damp locations.
10. SJOW: 300 V hard-usage, junior hard-service cord with thermoset insulation and oil-resistant thermoset outer cover for damp or wet locations.
11. SJOO: 300 V hard-usage, junior hard-service cord with oil-resistant thermoset insulation and oil-resistant thermoset outer cover for damp locations.
12. SJOOW: 300 V hard-usage, junior hard-service cord with oil-resistant thermoset insulation and oil-resistant thermoset outer cover for damp or wet locations.
13. SJTO: 300 V hard-usage, junior hard-service cord with thermoplastic insulation and oil-resistant thermoplastic outer cover for damp locations.
14. SJTOW: 300 V hard-usage, junior hard-service cord with thermoplastic insulation and oil-resistant thermoplastic outer cover for damp or wet locations.
15. SJTOO: 300 V hard-usage, junior hard-service cord with oil-resistant thermoplastic insulation and oil-resistant thermoplastic outer cover for damp locations.

16. SJTOOW: 300 V hard-usage, junior hard-service cord with oil-resistant thermoplastic insulation and oil-resistant thermoplastic outer cover for damp or wet locations.
17. SO: 600 V extra-hard-usage, hard-service cord with thermoset insulation and oil-resistant thermoset outer covering for damp locations.
18. SOW: 600 V extra-hard-usage, hard-service cord with thermoset insulation and oil-resistant thermoset outer covering for damp or wet locations.
19. SOO: 600 V extra-hard-usage, hard-service cord with oil-resistant thermoset insulation and oil-resistant thermoset outer covering for damp locations.
20. SOOW: 600 V extra-hard-usage, hard-service cord with oil-resistant thermoset insulation and oil-resistant thermoset outer covering for damp or wet locations.
21. STO: 600 V extra-hard-usage, hard-service cord with thermoplastic insulation and oil-resistant thermoplastic outer covering for damp locations.
22. STOW: 600 V extra-hard-usage, hard-service cord with thermoplastic insulation and oil-resistant thermoplastic outer covering for damp or wet locations.
23. STOO: 600 V extra-hard-usage, hard-service cord with oil-resistant thermoplastic insulation and oil-resistant thermoplastic outer covering for damp locations.
24. STOOW: 600 V extra-hard-usage, hard-service cord with oil-resistant thermoplastic insulation and oil-resistant thermoplastic outer covering for damp or wet locations.

E. Definitions:
1. 8-Position 8-Contact (8P8C) Modular Jack: An unkeyed jack with up to eight contacts commonly used to terminate twisted-pair and multiconductor Ethernet cable. Also called a "TIA-1096 miniature 8-position series jack" (8PSJ), or an "IEC 8877 8-pole jack."
    a. Be careful when suppliers use "RJ45" generically. Obsolete RJ45 jacks used for analog telephone cables have rejection keys. 8P8C jacks used for digital telephone cables and Ethernet cables do not have rejection keys.
2. Basic Impulse Insulation Level (BIL): Reference insulation level expressed in impulse crest voltage with a standard wave not longer than 1.5 times 50 microseconds and 1.5 times 40 microseconds.
3. Cable: In accordance with NIST NBS Circular 37 and IEEE standards, in the United States for the purpose of interstate commerce, the definition of "cable" is (1) a conductor with insulation, or a stranded conductor with or without insulation (single-conductor cable); or (2) a combination of conductors insulated from one another (multiple-conductor cable).
4. Communications Jack: A fixed connecting device designed for insertion of a communications cable plug.
5. Communications Outlet: One or more communications jacks, or cables and plugs, mounted in a box or ring, with a suitable protective cover.
6. Conductor: In accordance with NIST NBS Circular 37 and IEEE standards, in the United States for the purpose of interstate commerce, the definition of "conductor" is (1) a wire or combination of wires not insulated from one another, suitable for carrying an electric current; (2) (National Electrical Safety Code) a material, usually in the form of wire, cable, or bar, suitable for carrying an electric current; or (3) (general) a substance or body that allows a current of electricity to pass continuously along it.
7. Designated Seismic System: A system component that requires design in accordance with Ch. 13 of ASCE/SEI 7 and for which the Component Importance Factor is greater than 1.0.
8. Direct Buried: Installed underground without encasement in concrete or other protective material.
9. Enclosure: The case or housing of an apparatus, or the fence or wall(s) surrounding an installation, to prevent personnel from accidentally contacting energized parts or to protect the equipment from physical damage. Types of enclosures and enclosure covers include the following:
    a. Cabinet: An enclosure that is designed for either surface mounting or flush mounting and is provided with a frame, mat, or trim in which a swinging door or doors are or can be hung.
    b. Concrete Box: A box intended for use in poured concrete.
    c. Conduit Body: A means for providing access to the interior of a conduit or tubing system through one or more removable covers at a junction or terminal point. In the United States, conduit bodies are listed in accordance with outlet box requirements.
    d. Conduit Box: A box having threaded openings or knockouts for conduit, EMT, or fittings.
    e. Cutout Box: An enclosure designed for surface mounting that has swinging doors or covers secured directly to and telescoping with the walls of the enclosure.
    f. Device Box: A box with provisions for mounting a wiring device directly to the box.

g. Extension Ring: A ring intended to extend the sides of an outlet box or device box to increase the box depth, volume, or both.

h. Floor Box: A box mounted in the floor intended for use with a floor box cover and other components to complete the floor box enclosure.

i. Floor-Mounted Enclosure: A floor box and floor box cover assembly with means to mount in the floor that is sealed against the entrance of scrub water at the floor level.

j. Floor Nozzle: An enclosure used on a wiring system, intended primarily as a housing for a receptacle, provided with a means, such as a collar, for surface-mounting on a floor, which may or may not include a stem to support it above the floor level, and is sealed against the entrance of scrub water at the floor level.

k. Junction Box: A box with a blank cover that joins different runs of raceway or cable and provides space for connection and branching of the enclosed conductors.

l. Outlet Box: A box that provides access to a wiring system having pryout openings, knockouts, threaded entries, or hubs in either the sides or the back, or both, for the entrance of conduit, conduit or cable fittings, or cables, with provisions for mounting an outlet box cover, but without provisions for mounting a wiring device directly to the box.

m. Pedestal Floor Box Cover: A floor box cover that, when installed as intended, provides a means for typically vertical or near-vertical mounting of receptacle outlets above the floor's finished surface.

n. Pull Box: A box with a blank cover that joins different runs of raceway and provides access for pulling or replacing the enclosed cables or conductors.

o. Raised-Floor Box: A floor box intended for use in raised floors.

p. Recessed Access Floor Box: A floor box with provisions for mounting wiring devices below the floor surface.

q. Recessed Access Floor Box Cover: A floor box cover with provisions for passage of cords to recessed wiring devices mounted within a recessed floor box.

r. Ring: A sleeve, which is not necessarily round, used for positioning a recessed wiring device flush with the plaster, concrete, drywall, or other wall surface.

s. Ring Cover: A box cover, with raised center portion to accommodate a specific wall or ceiling thickness, for mounting wiring devices or luminaires flush with the surface.

t. Termination Box: An enclosure designed for installation of termination base assemblies consisting of bus bars, terminal strips, or terminal blocks with provision for wire connectors to accommodate incoming or outgoing conductors, or both.

10. Emergency Systems: Those systems legally required and classed as emergency by municipal, state, federal, or other codes, or by any governmental agency having jurisdiction that are designed to ensure continuity of lighting, electrical power, or both, to designated areas and equipment in the event of failure of the normal supply for safety to human life.

11. Essential Electrical Systems: (healthcare facilities) Those systems designed to ensure continuity of electrical power to designated areas and functions of a healthcare facility during disruption of normal power sources, and also to minimize disruption within the internal wiring system.

12. Fault Limited: Providing or being served by a source of electrical power that is limited to not more than 100 W when tested in accordance with UL 62368-1.

    a. The term "fault limited" is intended to encompass most Class 1, 2, and 3 power-limited sources complying with Article 725 of NFPA 70; Class ES1 and ES2 electrical energy sources that are Class PS 1 electrical power sources (e.g., USB); and Class ES3 electrical energy sources that are Class PS 1 and PS 2 electrical power sources (e.g., PoE). See UL 62368-1 for discussion of classes of electrical energy sources and classes of electrical power sources.

13. High-Performance Building: A building that integrates and optimizes on a life-cycle basis all major high-performance attributes, including energy conservation, environment, safety, security, durability, accessibility, cost-benefit, productivity, sustainability, functionality, and operational considerations.

14. Jacket: A continuous nonmetallic outer covering for conductors or cables.

15. Luminaire: A complete lighting unit consisting of a light source such as a lamp, together with the parts designed to position the light source and connect it to the power supply. It may also include parts to protect the light source or the ballast or to distribute the light.

16. Mode: The terms "Active Mode," "Off Mode," and "Standby Mode" are used as defined in the Energy Independence and Security Act (EISA) of 2007.

17. Multi-Outlet Assembly: A type of surface, flush, or freestanding raceway designed to hold conductors, receptacles, and switches, assembled in the field or at the factory.
18. Plenum: A compartment or chamber to which one or more air ducts are connected and that forms part of the air distribution system.
19. Receptacle: A fixed connecting device arranged for insertion of a power cord plug. Also called a power jack.
20. Receptacle Outlet: One or more receptacles mounted in a box with a suitable protective cover.
21. Sheath: A continuous metallic covering for conductors or cables.
22. UL Category Control Number (CCN): An alphabetic or alphanumeric code used to identify product categories covered by UL's Listing, Classification, and Recognition Services.
23. Voltage Class: For specified circuits and equipment, voltage classes are defined as follows:
    a. Control Voltage: Having electromotive force between any two conductors, or between a single conductor and ground, that is supplied from a battery or other Class 2 or Class 3 power-limited source.
    b. Line Voltage: (1) (controls) Designed to operate using the supplied low-voltage power without transformation. (2) (transmission lines, transformers, SPDs) The line-to-line voltage of the supplying power system.
    c. Extra-Low Voltage (ELV): Not having electromotive force between any two conductors, or between a single conductor and ground, exceeding 30 V(ac rms), 42 V(ac peak), or 60 V(dc).
    d. Low Voltage (LV): Having electromotive force between any two conductors, or between a single conductor and ground, that is rated above 30 V but not exceeding 1000 V.
    e. Medium Voltage (MV): Having electromotive force between any two conductors, or between a single conductor and ground, that is rated about 1 kV but not exceeding 69 kV.
    f. High Voltage: (1) (circuits) Having electromotive force between any two conductors, or between a single conductor and ground, that is rated above 69 kV but not exceeding 230 kV. (2) (safety) Having sufficient electromotive force to inflict bodily harm or injury.
24. Wire: In accordance with NIST NBS Circular 37 and IEEE standards, in the United States for the purpose of interstate commerce, the definition of "wire" is a slender rod or filament of drawn metal. A group of small wires used as a single wire is properly called a "stranded wire." A wire or stranded wire covered with insulation is properly called an "insulated wire" or a "single-conductor cable." Nevertheless, when the context indicates that the wire is insulated, the term "wire" will be understood to include the insulation.

1.3 COORDINATION

A. Interruption of Existing Electrical Service: Do not interrupt electrical service to facilities occupied by Owner or others unless permitted under the following conditions:
    1. Notify Owner no fewer than fourteen days in advance of proposed interruption of electrical service.
    2. Do not proceed with interruption of electrical service without Owner's written permission.
    3. Coordinate interruption with systems impacted by outage including, but not limited to, the following:
        a. Exercising generators.
        b. Emergency lighting.
        c. Elevators.
        d. Fire-alarm systems.
B. Arrange to provide temporary electrical service in accordance with requirements specified in Division 01.

1.4 PREINSTALLATION MEETINGS

A. Electrical Preconstruction Conference: Schedule conference with Architect and Owner, not later than 10 days after notice to proceed. Agenda topics include, but are not limited to, the following:
    1. Electrical installation schedule.
    2. Status of power system studies.
    3. Value analysis proposals and requests for substitution of electrical equipment.
    4. Utility work coordination and class of service requests.
    5. Commissioning activities.
    6. Sustainability activities, including Measurement and Verification Plan.

1.5 SEQUENCING

A. Conduct and submit results of power system studies before submitting Product Data and Shop Drawings for electrical equipment.

1.6 ACTION SUBMITTALS

A. Coordination drawings.

1.7 INFORMATIONAL SUBMITTALS

A. Electrical installation schedule.
B. Qualification statements.
C. Welding certificates.
D. Seismic-load performance certificates and wind-load performance certificates.
E. Delegated design drawings for structural masonry wall penetrations.

1.8 CLOSEOUT SUBMITTALS

A. Facility EPM program binders.
B. Operation and maintenance data.
C. Software and firmware operational documentation.
D. Software.

1.9 QUALITY ASSURANCE

A. Qualifications: Prepare and submit qualification statements for the following entities performing Work on Project:
   1. Qualified Regional Manufacturer: Manufacturer, possessing qualifications specified in Section 014000 "Quality Requirements," that maintains a service center capable of providing training, parts, and emergency on-site repairs to Project site with response time less than eight hours.
   2. Structural Professional Engineer: Professional engineer possessing active qualifications specified in Section 014000 "Quality Requirements," with expertise in structural engineering, including seismic- and wind-load modeling and analysis.
   3. Electrical Professional Engineer: Professional engineer possessing active qualifications specified in Section 014000 "Quality Requirements," with expertise in electrical engineering, including electrical power system modeling and analysis of electrical safety in accordance with NFPA 70E.
   4. Lighting Professional Engineer: Professional engineer possessing active qualifications in accordance with Section 014000 "Quality Requirements" and the following:
      a. Expertise in electrical engineering, lighting design, and structural requirements for exterior poles and standards.
      b. Lighting Certified (LC) Professional by the National Council on Qualifications for the Lighting Professions (NCQLP).
   5. EPM Specialist: Recognized experts possessing the following qualifications in accordance with Section 014000 "Quality Requirements" and NFPA 70B:
      a. Technical Competence: Person should, by education, training, and experience, be well-rounded in all aspects of electrical maintenance.
      b. Administrative and Supervisory Skills: Person should be skilled in planning and development of long-range objectives to achieve specific results and should be able to command respect and solicit cooperation of persons involved in EPM Program development.
   6. Welder: Installer possessing active qualifications specified in Section 014000 "Quality Requirements," with training and certification in accordance with AWS D1.1/D1.1M and AWS D1.2/D1.2M.
   7. ERMC-S-PVC Installers: Installer possessing active qualifications specified in Section 014000 "Quality Requirements," and able to present unexpired certified Installer credentials issued by ERMC-S-PVC manufacturer prior to starting installation.

8. Medium-Voltage Cable Installer: Entity possessing active qualifications specified in Section 014000 "Quality Requirements" with training and manufacturer certification to install, splice, and terminate medium-voltage cable.
    a. Medium-voltage cable Installer must be approved by owner.
9. Medium-Voltage Duct Installer: Entity possessing active qualifications specified in Section 014000 "Quality Requirements" with documented training and experience with installation of medium-voltage duct banks.
    a. Medium-voltage duct Installer must be approved by owner.
10. Medium-Voltage Equipment Installer: Entity possessing active qualifications specified in Section 014000 "Quality Requirements" with documented training and experience with hazards and safety requirements associated with installation and operation of medium-voltage equipment in accordance with electrical utility service provider requirements and owner requierments.
    a. Medium-voltage equipment Installer must be approved by owner.
11. Electrical Power Monitoring Installers: Installer possessing active qualifications specified in Section 014000 "Quality Requirements," and able to present unexpired certified Installer credentials issued by manufacturer prior to starting installation.
12. EVSE Installers: Installer possessing active qualifications specified in Section 014000 "Quality Requirements," and able to present unexpired certified Installer credentials issued by EVSE manufacturer prior to starting installation.
13. Generator Set Installers: Installer possessing active qualifications specified in Section 014000 "Quality Requirements," and able to present unexpired certified Installer credentials issued by generator set manufacturer prior to starting installation.
14. Lightning Protection System Installers: Installer possessing active qualifications specified in Section 014000 "Quality Requirements," and able to present unexpired UL-Listed Installer, UL Category Control Number OWAY, credentials prior to starting installation.
15. Theatrical Lighting Installers: Installer possessing active qualifications specified in Section 014000 "Quality Requirements," and able to present unexpired certified Installer credentials issued by theatrical lighting manufacturers prior to starting installation.
16. Exterior Athletic Lighting Installers: Installer possessing active qualifications specified in Section 014000 "Quality Requirements," and able to present unexpired certified Installer credentials issued by exterior athletic lighting manufacturer prior to starting installation.
17. Power Quality Specialist: Recognized experts possessing active credentials from a qualified electrical testing laboratory recognized by authorities having jurisdiction, and able to present unexpired NICET Level 4 credentials with documented experience in power quality testing for installations similar in complexity to this Project.
18. Low-Voltage Electrical Testing and Inspecting Agency: Entities possessing active credentials from a qualified electrical testing laboratory recognized by authorities having jurisdiction.
    a. On-site electrical testing supervisors must have documented certification and experience with testing electrical equipment in accordance with NETA testing standards.
19. Medium-Voltage Electrical Testing and Inspecting Agency: Entities possessing active credentials from a qualified electrical testing laboratory recognized by authorities having jurisdiction.
    a. On-site electrical testing supervisors must have documented certification and experience with testing electrical equipment in accordance with NETA testing standards.
20. Power-Limited Electrical Testing Agency: Entity possessing active credentials from a qualified electrical testing laboratory recognized by authorities having jurisdiction.
    a. On-site power-limited testing supervisor must have BICSI Registered Communications Distribution Designer certification and documented training and experience with testing power-limited equipment in accordance with NETA testing standards.
21. Structural Testing and Inspecting Agency: Entity possessing active qualifications specified in Section 014000 "Quality Requirements" with documented training and experience with testing structural concrete, seismic controls, and wind-load controls.
22. Outdoor Pole Testing and Inspecting Agency: Entity possessing active qualifications specified in Section 014000 "Quality Requirements" with documented training and experience in accordance with ASTM C1093 for foundation testing and inspections.
23. Luminaire Photometric Testing Laboratory: Entity possessing active qualifications specified in Section 014000 "Quality Requirements" accredited under the NVLAP for Energy Efficient Lighting Products, and complying with applicable IES testing standards.

24. Lighting Testing and Inspecting Agency: Entity possessing active qualifications specified in Section 014000 "Quality Requirements" with documented training and experience with testing and inspecting lighting installations in accordance with IES LM-5.

B. Certifications:

1. Seismic-Load Performance Certificates: Provide special certification for designated seismic systems as indicated in Paragraph 13.2.2 "Special Certification Requirements for Designated Seismic Systems" of ASCE/SEI 7-05 for all designated seismic-load systems identified on Drawings or in the Specifications.

a. Include the following information:

1) Basis for Certification: Indicate whether withstand certification is based on actual test of assembled components or on calculation.

2) Dimensioned Outline Drawings of Equipment Unit: Identify center of gravity and locate and describe mounting and anchorage provisions.

3) Detailed description of equipment anchorage devices on which the certification is based and their installation requirements.

4) Detailed description of conduit support devices and interconnections on which the certification is based and their installation requirements.

5) Provide equipment manufacturer's written certification for each designated active electrical seismic device and system, stating that it will remain operable following the design earthquake. Certification must be based on requirements of ASCE/SEI 7, including shake table testing per ICC-ES AC156 or a similar nationally recognized testing standard procedure acceptable to authorities having jurisdiction, or experience data as permitted by ASCE/SEI 7-05.

6) Provide equipment manufacturer's written certification that components with hazardous contents maintain containment following the design earthquake by methods required in ASCE/SEI 7-05.

7) Submit evidence demonstrating compliance with these requirements for approval to authorities having jurisdiction after review and acceptance by qualified structural professional engineer.

b. The following systems and components are Designated Seismic Systems and require written special certification of seismic qualification by manufacturer:

1) Hangers and supports specified in Section 260529 "Hangers and Supports for Electrical Systems."

2) Conduits and their mounting provisions specified in Section 260533.13 "Conduits for Electrical Systems."

3) Boxes and their mounting provisions specified in Section 260533.16 "Boxes and Covers for Electrical Systems."

4) Surface raceways and their mounting provisions specified in Section 260533.23 "Surface Raceways for Electrical Systems."

5) Seismic restraints specified in Section 260548 "Vibration and Seismic Controls for Electrical Systems”.

6) Cable trays, accessories, and components specified in Section 260536 "Cable Trays for Electrical Systems."

7) Equipment, accessories, and components specified in Section 261116.11 "Secondary Unit Substations with Switchgear Secondary."

8) Equipment, accessories, and components specified in Section 261116.12 "Secondary Unit Substations with Switchboard Secondary."

9) Equipment, accessories, and components specified in Section 261116.13 "Secondary Unit Substations with Motor Control Center Secondary."

10) Equipment, accessories, and components specified in Section 261213 "Liquid-Filled, Medium-Voltage Transformers."

11) Equipment, accessories, and components specified in Section 261216 "Dry-Type, Medium-Voltage Transformers."

12) Equipment, accessories, and components specified in Section 261219 "Pad-Mounted, Liquid-Filled, Medium-Voltage Transformers."

13) Equipment, accessories, and components specified in Section 261323 "Medium-Voltage Metal-Enclosed Switchgear."

14) Equipment, accessories, and components specified in Section 261326 "Medium-Voltage Metal-Clad Switchgear."

15) Equipment, accessories, and components specified in Section 261329 "Medium-Voltage Compartmentalized Switchgear."
16) Equipment, accessories, and components specified in Section 262213 "Low-Voltage Distribution Transformers."
17) Equipment, accessories, and components specified in Section 262300 "Low-Voltage Switchgear."
18) Equipment, overcurrent protective devices, accessories, and components specified in Section 262313 "Paralleling Low-Voltage Switchgear."
19) Equipment, accessories, and components specified in Section 262413 "Switchboards."
20) Equipment, accessories, and components specified in Section 262416 "Panelboards."
21) Equipment, accessories, and components specified in Section 262416.16 "Electronically Operated Circuit-Breaker Panelboards."
22) Equipment, accessories, and components specified in Section 262419 "Motor-Control Centers."
23) Equipment, accessories, and components specified in Section 262500 "Low-Voltage Enclosed Bus Assemblies."
24) Cabinets, enclosures, racks, and their mounting provisions specified in Section 262716 "Electrical Cabinets and Enclosures."
25) Equipment, accessories, and components specified in Section 262733 "Power Distribution Units."
26) Equipment, accessories, and components specified in Section 262816 "Enclosed Switches and Circuit Breakers."
27) Equipment, accessories, and components specified in Section 262913.03 "Manual and Magnetic Motor Controllers."
28) Equipment, accessories, and components specified in Section 262913.06 "Soft-Start Motor Controllers."
29) Equipment, accessories, and components specified in Section 262923 "Variable-Frequency Motor Controllers."
30) Equipment, accessories, and components specified in Section 263323.11 "Central Battery Equipment for Emergency Lighting."
31) Equipment, accessories, and components specified in Section 263343 "Battery Chargers."
32) Equipment, accessories, and components specified in Section 263353 "Static Uninterruptible Power Supply."
33) Luminaires, accessories, and components specified in Section 265000 "Lighting."

2. Wind-Load Performance Certificates: Provide special certification for systems and components designated on Drawings or in the Specifications to be subject to high wind exposure and impact damage.
   a. Include the following information:
      1) Provide equipment manufacturer's written certification for each designated system and component, stating that it will remain in place and operable following the design wind event and comply with requirements of authorities having jurisdiction.
      2) Certification must be based on ICC-ES or similar nationally recognized testing standard procedures acceptable to authorities having jurisdiction.
   b. The following systems and components require written special certification of resistance to effects of high wind-load and impact damage by manufacturer:
      1) ???Insert items???.

1.10 FIELD CONDITIONS

A. Modeling, analysis, product selection, installation, and quality control for Work specified in Division 26 must comply with requirements specified in Section 260011 "Facility Performance Requirements for Electrical."

B. Service Conditions for Electrical Power Equipment: Besides conditions specified in Section 260011 "Facility Performance Requirements for Electrical," specified electrical power equipment must be suitable for operation under service conditions specified as usual service conditions in applicable NEMA PB series, IEEE C37 series, and IEEE C57 series standards, except for the following:
   1. CHP Plant and Utility Yard and Existing Central Plant:

a. Exposure to significant solar radiation.
b. Exposure to fumes, vapors, or dust.
c. Exposure to explosive environments.
d. Ambient temperature not exceeding 122 deg F (50 deg C).
e. Exposure to hot and humid climate or to excessive moisture, including steam, salt spray, and dripping water.
f. Unusual transportation or storage conditions.
g. Unusual grounding resistance conditions.
h. Unusual space limitations.

PART 2 PRODUCTS

2.1 SUBSTITUTION LIMITATIONS FOR ELECTRICAL EQUIPMENT

A. Substitution requests for electrical equipment will be entertained under the following conditions:
1. Notification of Contractor's intent to request substitutions for convenience must be declared during the Electrical Preconstruction Conference so potential risks to system performance and construction schedule may be identified for Contractor's response in submission of the substitution request. Submission of requests for substitutions for convenience must meet the conditions and deadline specified in Section 012500 "Substitution Procedures" to receive approval.
2. For electrical equipment and systems, substitutions for cause are considered major construction risks. If it is possible that Contractor may need to request substitutions for cause because of equipment unavailability, or inability to meet construction schedule because of lead time, Contractor must declare the possibility during the Electrical Preconstruction Conference to permit establishing a mitigation plan for minimizing risks to system performance and construction schedule.

PART 3 EXECUTION

3.1 EXAMINATION

A. Verification of Conditions:
1. Contractor to verify all equipment being tied into is in proper working condition prior to start of work.

3.2 PREPARATION

A. Electrical Installation Schedule: At preconstruction meeting, and periodically thereafter as dates change, provide schedule for electrical installation Work to Owner and Architect including, but not limited to, milestone dates for the following activities:
1. Submission of power system studies.
2. Submission of specified coordination drawings.
3. Submission of action submittals specified in Division 26.
4. Orders placed for major electrical equipment.
5. Arrival of major electrical equipment on-site.
6. Preinstallation meetings specified in Division 26.
7. Utility service outages.
8. Utility service inspection and activation.
9. Mockup reviews.
10. Closing of walls and ceilings containing electrical Work.
11. System startup, testing, and commissioning activities for major electrical equipment.
12. System startup, testing, and commissioning activities for emergency lighting.
13. System startup, testing, and commissioning activities for automation systems (SCADA, BMS, lighting, HVAC, fire alarm, fire pump, etc.).
14. Pouring of concrete housekeeping pads for electrical equipment and testing of concrete samples.

15. Requests for special inspections.
16. Requests for inspections by authorities having jurisdiction.

B. Coordination Drawings for Structural Supports: Show coordination of structural supports for equipment and devices, including restraints and bracing for control of seismic and wind loads, with other systems, equipment, and structural supports in the vicinity.

C. Coordination Drawings for Ceiling Areas: Where indicated on drawings, provide reflected ceiling plan(s), supplemented by sections and other details, drawn to scale, in accordance with Section 013100 "Project Management and Coordination," on which the following items are shown and coordinated with each other, using input from installers of the items involved:
1. Suspended ceiling components.
2. Structural members to which equipment, luminaires, and suspension systems will be attached.
3. Partitions and millwork that penetrate ceiling or extend to within 12 inch of plane of luminaires.
4. Size and location of access panels on ceilings.
5. Elevation, size, and route of sprinkler piping.
6. Elevation, size, and route of plumbing piping.
7. Elevation, size, and route of ductwork.
8. Elevation, size, and route of cable tray.
9. Elevation, size, and route of conduit.
10. Elevation and size of wall-mounted and ceiling-mounted equipment.
11. Moldings.
12. Access panels.
13. Sprinklers.
14. Air inlets and outlets.
15. Control modules.
16. Luminaires.
17. Communications devices.
18. Speakers.
19. Ceiling-mounted projectors.
20. Security devices.
21. Fire-alarm devices.
22. Indicate clear dimensions for maintenance access in front of equipment.
23. Indicate dimensions of fully-open access doors.

D. Coordination Drawings for Cable Tray Routing: Reflected ceiling plan(s), supplemented by sections and other details, drawn to scale, in accordance with Section 013100 "Project Management and Coordination," on which the following items are shown and coordinated with each other, using input from installers of the items involved:
1. Elevation, size, and route of cable trays.
2. Relationships between components and adjacent structural, electrical, and mechanical elements.
3. Vertical and horizontal offsets and transitions.
4. Elevation and size of sleeves for wall, ceiling, and floor cable penetrations.
5. Elevation of ceilings and size of ceiling tiles.
6. Locations of access panels on ceilings.
7. Locations where cable tray crosses or parallels sprinkler piping.
8. Locations where cable tray crosses plumbing piping.
9. Locations where cable tray crosses or parallels ductwork.
10. Locations of access panels on ductwork.
11. Locations where cable tray crosses conduit.
12. Items blocking access around cable trays, including the following:
    a. Light fixtures.
    b. Speakers.
    c. Fire-alarm devices.
    d. Power outlets.
    e. Wall-mounted equipment.

f. Equipment racks.
g. Furniture.
h. Door swings.
i. Building features.

13. Indicate clear dimension between cable tray and walls or obstructions that are closer than 10 ft (3 m).
14. Highlight locations where cable tray is greater than 3 ft (1 m) above ceilings. Explain how personnel access will be accommodated for cable tray maintenance.

E. Coordination Drawings for Conduit Routing: Conduit routing plans, drawn to scale, on which the following items are shown and coordinated with each other, using input from installers of items involved:
1. Structural members in paths of conduit groups with common supports.
2. HVAC and plumbing items and architectural features in paths of conduit groups with common supports.

F. Coordination Drawings for Bus Assembly Routing: Floor plans and sections, drawn to scale, on which the following items are shown and coordinated with each other, using input from installers of items involved:
1. Scaled bus-assembly layouts and relationships between components and adjacent structural, mechanical, and electrical elements.
2. Vertical and horizontal enclosed bus-assembly runs, offsets, and transitions.
3. Clearances for access above and to the side of enclosed bus assemblies.
4. Vertical elevation of enclosed bus assemblies above the floor or bottom of structure.
5. Support locations, type of support, and weight on each support.
6. Location of adjacent construction elements including luminaires, HVAC and plumbing equipment, fire sprinklers and piping, signal and control devices, and other equipment.

G. Coordination Drawings for Large Equipment Indoor Installations:
1. Location plan, drawn to scale, showing heavy equipment or truck access paths to loading dock or other freight access into building. Indicate available width and height of doors or openings.
2. Floor plan for entry floor and floor where equipment is located, drawn to scale, showing heavy equipment access paths for maintenance and replacement, with the following items shown and coordinated with each other, based on input from installers of the items involved:
a. Dimensioned concrete bases, outlines of equipment, conduit entries, and grounding equipment locations.
b. If freight elevator must be used, indicate width and height of door and depth of car. Indicate if large equipment must be tipped to use elevator.
c. Dimensioned working clearances and dedicated areas below and around electrical equipment where obstructions and tripping hazards are prohibited.
3. Reflected ceiling plans for entry floor and floor where equipment is located, drawn to scale, on which the following items shown and coordinated with each other, based on input from installers of the items involved:
a. Support locations, type of support, and weight on each support. Locate structural supports for structure-supported raceways, busways, and seismic bracing.
b. Location of lighting fixtures, sprinkler piping and sprinklers, ducts and diffusers, and other obstructions, indicating available overhead clearance.
c. Dimensioned working clearances and dedicated areas above and around electrical equipment where foreign systems and equipment are prohibited.

H. Coordination Drawings for Large Equipment Outdoor Installations:
1. Utilities site plan, drawn to scale, showing heavy equipment or truck access paths for maintenance and replacement, with the following items shown and coordinated with each other, based on input from installers of the items involved:
a. Fences and walls, dimensioned concrete bases, outlines of equipment, conduit entries, and grounding and bonding locations.
b. Indicate clear dimensions for fence gates and wall openings.
c. Indicate depth and type of ground cover, and locations of trees, shrubbery, and other obstructions in access path.
d. Indicate clear height below tree branches, overhead lines, bridges, and other overhead obstructions in access path, or where cranes and hoists will be needed to handle large electrical equipment.

e. Support locations, type of support, and weight on each support. Locate structural supports for structure-supported raceways, busways, and seismic bracing.

f. Dimensioned working clearances and dedicated areas around electrical equipment.

I. Coordination Drawings for Duct Banks:

1. Show duct profiles and coordination with other utilities and underground structures.
2. Include plans and sections, drawn to scale, and show bends and locations of expansion fittings.

3.3 DELEGATED DESIGN OF STRUCTURAL PENETRATIONS

A. Engage qualified structural professional engineer to design penetrations of structural masonry walls.

B. Delegated Design Drawings for Structural Masonry Wall Penetrations: Where indicated on Drawings, provide reflected ceiling plan(s), supplemented by elevations, sections, and other details, drawn to scale, signed and sealed by a qualified structural professional engineer, on which the following items are shown and coordinated with each other, using input from installers of the items involved:

1. Location and dimensions of structural members supporting wall.
2. Location and dimensions of columns near penetrations.
3. Location and dimension of headers and lintels.
4. Doors and windows near penetrations.
5. Location and dimensions of penetrating cuts.
6. Sprinkler piping and sleeves.
7. Plumbing piping and sleeves.
8. Ductwork and sleeves.
9. Cable tray and sleeves.
10. Conduit and sleeves.
11. Firestopping assemblies for rated penetrations.
12. Structural supports for piping, ductwork, and conduit on both sides of wall.

C. Delegated Design Criteria: As depicted on Drawings.

3.4 INSTALLATION OF ELECTRICAL WORK

A. Unless more stringent requirements are specified in the Contract Documents or manufacturers' written instructions, comply with NFPA 70 and NECA NEIS 1 for installation of Work specified in Division 26. Consult Architect for resolution of conflicting requirements.

3.5 SYSTEM STARTUP

A. Commissioning Activities:

1. See commissioning plan

3.6 FIELD QUALITY CONTROL

A. Administrant for Medium-Voltage Electrical Tests and Inspections:

1. Contractor will engage qualified medium-voltage electrical testing and inspecting agency to administer and perform tests and inspections. Finding reports to be reviewed and approved by owner.
2. Engage qualified medium-voltage electrical testing and inspecting agency to administer and perform tests and inspections.
3. Engage factory-authorized service representative to administer and perform tests and inspections on components, assemblies, and equipment installations, including connections.
4. Administer and perform tests and inspections with assistance of factory-authorized service representative.

B. Administrant for Low-Voltage Electrical Tests and Inspections:

1. Contractor will engage qualified low-voltage electrical testing and inspecting agency to administer and perform tests and inspections.
2. Engage qualified low-voltage electrical testing and inspecting agency to administer and perform tests and inspections.

3. Engage factory-authorized service representative to administer and perform tests and inspections on components, assemblies, and equipment installations, including connections.
4. Administer and perform tests and inspections with assistance of factory-authorized service representative.

C. Administrant for Structural Tests and Inspections:
1. Contractgor will engage qualified structural testing and inspecting agency to administer and perform tests and inspections.
2. Engage qualified structural testing and inspecting agency to administer and perform tests and inspections.
3. Engage factory-authorized service representative to administer and perform tests and inspections on components, assemblies, and equipment installations, including connections.
4. Administer and perform tests and inspections with assistance of factory-authorized service representative.

D. Administrant for Field Tests and Inspections of Lighting Installations:
1. Contractor will engage qualified lighting testing and inspecting agency to administer and perform tests and inspections.
2. Engage qualified lighting testing and inspecting agency to administer and perform tests and inspections.
3. Engage factory-authorized service representative to administer and perform tests and inspections on components, assemblies, and equipment installations, including connections.
4. Administer and perform tests and inspections with assistance of factory-authorized service representative.

3.7 CLOSEOUT ACTIVITIES

A. Development of Facility EPM Program
1. Facility EPM Program must be developed by qualified EPM specialist.
2. Conduct Facility EPM Program analysis in accordance with NFPA 70B recommendations.
   a. Renovation Projects:
      1) Facility diagrams must include connected existing equipment for entire facility where known. Areas of uncertainty should be clearly indicated.
      2) Obtain copies of existing operation and maintenance data and existing Facility EPM Program information from Owner.
      3) Facility EPM Program analysis should identify existing equipment that does not have available operation and maintenance data, and should explain the Owner's risks because this equipment is not included in Facility EPM Program.
      4) Data for existing equipment outside scope of Project may be inserted in Facility EPM Program Binders without analysis.
      5) Data for existing equipment impacted by scope of Project should be analyzed and documented similar to Project's new equipment data as much as possible.
3. Compile operation and maintenance data from Facility EPM Program analysis and submit updated Facility EPM Program Binders.
4. Facility EPM Program Binders:
   a. Description: Set of binders containing operation and maintenance data for facility's electrical equipment that was compiled during analysis of installed electrical Work for Facility EPM Program development.
   b. Referenced Standards: Content must comply with recommendations in NFPA 70B.
   c. General Characteristics:
      1) Volume 1 - Introduction:
         (a) Summarize how Facility EPM Program Analysis was performed, how data were collected, and how volumes are organized.
         (b) Describe Facility EPM Program and provide recommended policies and procedures for implementing the program and keeping it current.
         (c) Provide place for Owner to identify contact information for employees responsible for implementing and maintaining Facility EPM Program.
      2) Volume 2 - Facility Safety, Hazards Awareness, and Emergency Procedures:
         (a) Include training requirements for employees and contractors.

(b) Include list of known facility hazards impacting IT&R activities.
(c) Include approval and permitting procedures for IT&R activities.
(d) Include incident emergency response procedures.
(e) Include emergency shutdown procedures.
(f) Include electrical disaster recovery procedures.

3) Volume 3 - Operating Procedures for Electrical Equipment and Controls:
(a) Include copies of demonstration and training videos.

4) Volume 4 - Facility Diagrams and Schedules:
(a) Include single-line diagrams.
(b) Include grounding and bonding diagrams.
(c) Include essential wiring diagrams.
(d) Include system communications diagrams (WAN, LAN, Wi-Fi, ERCES, MNS, etc.)
(e) Include system automation diagrams (SCADA, BMS, lighting, HVAC, etc.).
(f) Include records of switchgear, switchboard, and panelboard schedules.
(g) Include time-current curves for overcurrent protective devices.
(h) Include list of load-current and overload-relay heaters with related motor nameplate data.

5) Volume 5 - Inventory of Facility Equipment Using Electrical Power:
(a) Include simplified floor plans showing equipment locations.
(b) Identify critical equipment (electrical or otherwise).
(c) Include identifying designations and nameplate data.
(d) Include warranty and maintenance contract information.

6) Volume 6 - Inventory of Facility Tools, Supplies, and Personnel Protective Equipment:
(a) Include schedules of maintenance material items recommended to be stored at facility.
(b) Include list of lamp types and photoelectric relays used in facility with ANSI and manufacturers' codes.
(c) Include calibration and servicing data for each item.

7) Volume 7 - Inspection, Testing, and Repair (IT&R) Plan:
(a) Include tables showing frequency of activities for each item.
(b) Include annual schedule with activities mapped to specific days of the year.
(c) Include exterior pole inspection and repair procedures.

8) Volume 8 - Inspection, Testing, and Repair (IT&R) Forms:

9) Volume 9 - Inspection, Testing, and Repair (IT&R) Procedures:

10) Volume 10 - Spare Parts List:
(a) Include list of all parts required to perform IT&R procedures.
(b) Identify quantities of which parts are recommended to be stored on-site.
(c) Include source contact information and budget cost for each item.

11) Volume 11 - Construction Project Closeout Record Documentation:
(a) Include records of power system studies and photometric studies.
(b) Include records of risk assessment studies.
(c) Include records of electrical system startup and commissioning activities.
(d) Include records of baseline inspections and tests.
(e) Include records of baseline infrared photographs with normal light photographs showing the location, direction, angle, and conditions necessary for reproducing each infrared photograph.
(f) Include records of baseline settings for adjustable equipment and devices.

5. Facility EPM Program Binders:
a. Complete Set: On approved online or cloud solution.
b. Volumes 2 and 8: Reproducible hardcopy on archival quality, 28 lb (105 GSM), acid-free, bond paper.

B. Operation and Maintenance Data: Prepare and submit the following:
1. Provide emergency operation, normal operation, and preventive maintenance manuals for each system, equipment, and device.
2. Include the following information:
a. Manufacturer's operating specifications.

b. User's guides for software and hardware.
c. Schedule of maintenance material items recommended to be stored at Project site.
d. Detailed instructions covering operation under both normal and abnormal conditions.
e. Time-current curves for overcurrent protective devices and manufacturer's written instructions for testing and adjusting their settings.
f. List of load-current and overload-relay heaters with related motor nameplate data.
g. List of lamp types and photoelectric relays used on Project, with ANSI and manufacturers' codes.
h. Manufacturer's instructions for setting field-adjustable components.
i. Manufacturer's instructions for testing, adjusting, and reprogramming microprocessor controls.
j. EPSS: Manufacturer's system checklists, maintenance schedule, and maintenance log sheets in accordance with NFPA 110.
k. Exterior pole inspection and repair procedures.
l. Include copies of demonstration and training videos.

C. Software and Firmware Operational Documentation: Provide software and firmware operational documentation in Facility EPM Program Binders, including the following:
1. Software operating and upgrade manuals.
2. Names, versions, and website addresses for locations of installed software.
3. Device address list.
4. Printout of software application and graphic screens.
5. Testing and adjusting of panic and emergency power features.
6. For lighting controls, include the following:
a. Adjustments of scene preset controls, adjustable fade rates, and fade overrides.
b. Operation of adjustable zone controls.

D. Software:
1. Program Software Backup: Provide username and password for approved online or cloud solution.
2. Provide to Owner upgrades and unrestricted licenses for installed and backup software, including operating systems and programming tools required for operation and maintenance.

E. Demonstration: With assistance from factory-authorized service representatives, demonstrate to Owner's maintenance and clerical personnel and building occupants how to operate the following systems and equipment:
1. Lighting control devices specified in Section 260923 "Lighting Control Devices."
2. Lighting control systems specified in Section 260943.16 "Addressable Luminaire Lighting Controls."
3. Lighting control systems specified in Section 260943.23 "Relay-Based Lighting Controls."
4. Electronic metering and billing software specified in Section 262713 "Electricity Metering."

F. Training: With assistance from factory-authorized service representatives, train Owner's maintenance personnel on the following topics:
1. How to implement updated Facility EPM Program.
2. How to adjust, operate, and maintain equipment specified in Section 111136 "Vehicle Charging Equipment."
3. How to operate normal and emergency electrical systems, including justifications for, and limitations of, protective device settings recommended in study report specified in Section 260573.16 "Coordination Studies."
4. Electrical power safety fundamentals refresher including arc-flash hazard safety features of electrical power distribution equipment in facility, interpreting arc-flash warning labels, selecting appropriate personal protective equipment, and understanding significance of findings documented in study report specified in Section 260573.19 "Arc-Flash Hazard Analysis."
5. How to adjust, operate, and maintain systems specified in Section 260913 "Electrical Power Monitoring."
6. How to adjust, operate, and maintain devices specified in Section 260923 "Lighting Control Devices."
7. How to adjust, operate, and maintain hardware and software specified in Section 260936 "Modular Dimming Controls”.

8. How to adjust, operate, and maintain hardware and software specified in Section 260943.16 "Addressable Luminaire Lighting Controls."
9. How to adjust, operate, and maintain hardware and software specified in Section 260943.23 "Relay-Based Lighting Controls."
10. How to adjust, operate, and maintain equipment specified in Section 261116.11 "Secondary Unit Substations with Switchgear Secondary."
11. How to adjust, operate, and maintain equipment specified in Section 261116.12 "Secondary Unit Substations with Switchboard Secondary."
12. How to adjust, operate, and maintain equipment specified in Section 261116.13 "Secondary Unit Substations with Motor Control Center Secondary."
13. How to adjust, operate, and maintain equipment specified in Section 261213 "Liquid-Filled, Medium-Voltage Transformers."
14. How to adjust, operate, and maintain equipment specified in Section 261216 "Dry-Type, Medium-Voltage Transformers."
15. How to adjust, operate, and maintain equipment specified in Section 261219 "Pad-Mounted, Liquid-Filled, Medium-Voltage Transformers."
16. How to adjust, operate, and maintain equipment specified in Section 261323 "Medium-Voltage Metal-Enclosed Switchgear."
17. How to adjust, operate, and maintain equipment specified in Section 261326 "Medium-Voltage Metal-Clad Switchgear."
18. How to adjust, operate, and maintain equipment specified in Section 261329 "Medium-Voltage Compartmentalized Switchgear."
19. How to adjust, operate, and maintain equipment specified in Section 262300 "Low-Voltage Switchgear."
20. How to adjust, operate, and maintain equipment specified in Section 262313 "Paralleling Low-Voltage Switchgear."
21. How to adjust, operate, and maintain switchboards, overcurrent protective devices, instrumentation, and accessories, and to use and reprogram microprocessor-based trip, monitoring, and communication units specified in Section 262413 "Switchboards."
22. How to adjust, operate, and maintain control modules specified in Section 262416.16 "Electronically Operated Circuit-Breaker Panelboards."
23. How to adjust, operate, and maintain enclosed controllers specified in Section 262419 "Motor-Control Centers."
24. How to adjust, operate, and maintain hardware and software specified in Section 262713 "Electricity Metering."
25. How to adjust, operate, and maintain equipment specified in Section 262733 "Power Distribution Units."
26. How to adjust, operate, and maintain equipment specified in Section 262913.03 "Manual and Magnetic Motor Controllers."
27. How to adjust, operate, and maintain equipment specified in Section 262913.06 "Soft-Start Motor Controllers."
28. How to adjust, operate, and maintain equipment specified in Section 262923 "Variable-Frequency Motor Controllers."
29. How to adjust, operate, and maintain controllers, remote alarm panels , low-suction-shutdown panels , and to use and reprogram microprocessor-based controls within this equipment specified in Section 262933 "Controllers for Fire Pump Drivers."
30. How to adjust, operate, and maintain equipment specified in Section 263100 "Photovoltaic Collectors."
31. How to adjust, operate, and maintain equipment specified in Section 263213.13 "Diesel-Engine-Driven Generator Sets."
32. How to adjust, operate, and maintain equipment specified in Section 263213.16 "Gas-Engine-Driven Generator Sets."
33. How to adjust, operate, and maintain equipment specified in Section 263213.19 "Bi-Fuel-Engine-Driven Generator Sets."
34. How to adjust, operate, and maintain equipment specified in Section 263323.11 "Central Battery Equipment for Emergency Lighting."
35. How to adjust, operate, and maintain equipment specified in Section 263343 "Battery Chargers."

36. How to adjust, operate, and maintain equipment specified in Section 263353 "Static Uninterruptible Power Supply."
37. How to adjust, operate, and maintain equipment specified in Section 263533 "Power Factor Correction Equipment."
38. How to adjust, operate, and maintain transfer switches and related equipment, including ground-fault protection system, specified in Section 263600 "Transfer Switches."
39. How to adjust, operate, and maintain devices specified in Section 264313 "Surge Protective Devices for Low-Voltage Electrical Power Circuits."
40. How to adjust, operate, and maintain stage lighting equipment specified in Section 265561 "Theatrical Lighting."
41. How to adjust, operate, and maintain luminaires and photoelectric controls specified in Section 265619 "LED Exterior Lighting."

END OF SECTION

SECTION 260513 - MEDIUM-VOLTAGE CABLES

PART 1 GENERAL

1.1 SUMMARY

A. Section Includes:
   1. Cables.
   2. Connectors.
   3. Solid terminations.
   4. Separable insulated connectors.
   5. Splice kits.
   6. Medium-voltage tapes.
   7. Arc-proofing materials.
   8. Fault indicators.
B. Related Requirements:
   1. Section 260010 "Supplemental Requirements for Electrical" for additional abbreviations, definitions, submittals, qualifications, testing agencies, and other Project requirements applicable to Work specified in this Section.
   2. Section 260011 "Facility Performance Requirements for Electrical" for seismic-load, wind-load, acoustical, and other field conditions applicable to Work specified in this Section.

1.2 ACTION SUBMITTALS

A. Product Data: For each type of cable. Include splices and terminations for cables and cable accessories.
B. Samples: 16 inch lengths for each type of cable specified.
C. Sustainable Design Submittals:

1.3 INFORMATIONAL SUBMITTALS

A. Field quality-control reports.

PART 2 PRODUCTS

2.1 SYSTEM DESCRIPTION

A. Electrical Components, Devices, and Accessories: Listed and labeled as defined in NFPA 70, by a qualified testing agency, and marked for intended location and application.
B. Comply with IEEE C2 and NFPA 70.
C. Source Limitations: Obtain cables and accessories from single source from single manufacturer.

2.2 CABLES

A. Cable Type: Type MV 105.
B. Conductor Insulation: Ethylene-propylene rubber.
   1. Voltage Rating: 15 kV.
   2. Insulation Thickness: 133 percent insulation level.
C. Conductor: Copper.
D. Comply with UL 1072, AEIC CS8, ICEA S-93-639/NEMA WC 74, and ICEA S-97-682 , and ICEA S-94-649.
E. Conductor Stranding: Concentric lay, Class B.
F. Strand Filling: Conductor interstices are filled with impermeable compound.
G. Shielding: Copper tape, helically applied over semiconducting insulation shield.

H. Shielding and Jacket: Corrugated copper drain wires embedded in extruded, chlorinated, polyethylene jacket.

I. Cable Jacket: Chlorosulfonated polyethylene.

2.3 CONNECTORS

A. Comply with ANSI C119.4 for connectors between aluminum conductors or for connections between aluminum to copper conductors.

B. Copper-Conductor Connectors: Copper barrel crimped connectors.

2.4 SOLID TERMINATIONS

A. Shielded-Cable Terminations: Comply with the following classes of IEEE 48. Insulation class shall be equivalent to that of cable. Include shield ground strap for shielded cable terminations.

1. Class 1 Terminations: Modular type, furnished as a kit, with stress-relief tube; multiple, molded-silicone-rubber, insulator modules; shield ground strap; and compression-type connector.
2. Class 2 Terminations, Indoors: Kit with stress-relief tube, nontracking insulator tube, shield ground strap, and compression-type connector. Include cold-shrink-rubber sleeve moisture seal for end of insulation whether or not supplied with kits.

2.5 SEPARABLE INSULATED CONNECTORS

A. Description: Modular system with disconnecting, single-pole, cable terminators and with matching, stationary, plug-in, dead-front terminals designed for cable voltage and for sealing against moisture.

B. Standard: Comply with IEEE 386.

C. Terminations at Distribution Points: Modular type, consisting of terminators installed on cables and modular, dead-front, terminal junctions for interconnecting cables.

D. Load-Break Cable Terminators: Elbow-type units with 200 A load make/break and continuous-current rating; coordinated with insulation diameter, conductor size, and material of cable being terminated. Include test point on terminator body that is capacitance coupled.

E. Dead-Break Cable Terminators: Elbow-type unit with 600 A continuous-current rating; designed for de-energized disconnecting and connecting; coordinated with insulation diameter, conductor size, and material of cable being terminated. Include test point on terminator body that is capacitance coupled.

F. Dead-Front Terminal Junctions: Modular bracket-mounted groups of dead-front stationary terminals that mate and match with above cable terminators. Two-, three-, or four-terminal units as indicated, with fully rated, insulated, watertight conductor connection between terminals and complete with grounding lug, manufacturer's standard accessory stands, stainless steel mounting brackets, and attaching hardware.

1. Protective Cap: Insulating, electrostatic-shielding, water-sealing cap with drain wire.
2. Portable Feed-Through Accessory: Two-terminal, dead-front junction arranged for removable mounting on accessory stand of stationary terminal junction.
3. Grounding Kit: Jumpered elbows, portable feed-through accessory units, protective caps, test rods suitable for concurrently grounding three phases of feeders, and carrying case.
4. Standoff Insulator: Portable, single dead-front terminal for removable mounting on accessory stand of stationary terminal junction. Insulators suitable for fully insulated isolation of energized cable-elbow terminator.

G. Test-Point Fault Indicators: Applicable current-trip ratings and arranged for installation in test points of load-break separable connectors, and complete with self-resetting indicators capable of being installed with shotgun hot stick and tested with test tool.

H. Tool Set: Shotgun hot stick with energized terminal indicator, fault-indicator test tool, and carrying case.

2.6 SPLICE KITS

A. Description: For splicing medium voltage cables; type as recommended by cable or splicing kit manufacturer for the application.

B. Standard: Comply with IEEE 404.

C. Splicing Products: As recommended, in writing, by splicing kit manufacturer for specific sizes, materials, ratings, and configurations of cable conductors. Include all components required for complete splice, with detailed instructions.

2.7 MEDIUM-VOLTAGE TAPES

A. Description: Electrical grade, insulating tape for medium voltage application.
B. Ethylene/propylene rubber-based, 30 mil splicing tape, rated for 130 deg C operation. Minimum 3/4 inch wide.
C. Insulating-putty, 125 mil elastic filler tape. Minimum 1-1/2 inches (38 mm) wide.

2.8 ARC-PROOFING MATERIALS

A. Tape for First Course on Metal Objects: 10 mil thick, corrosion-protective, moisture-resistant, PVC pipe-wrapping tape.
B. Arc-Proofing Tape: Fireproof tape, flexible, conformable, intumescent to 0.3 inch thick, and compatible with cable jacket.
C. Glass-Cloth Tape: Pressure-sensitive adhesive type, 1 inch wide.

2.9 FAULT INDICATORS

A. Indicators: Automatically reset fault indicator with inrush restraint feature, arranged to clamp to cable sheath and provide a display after a fault has occurred in cable. Instrument shall not be affected by heat, moisture, and corrosive conditions and shall be recommended by manufacturer for installation conditions.
B. Resetting Tool: Designed for use with fault indicators, with moisture-resistant storage and carrying case.

2.10 SOURCE QUALITY CONTROL

A. Test and inspect cables according to ICEA S-97-682 before shipping.
B. Test strand-filled cables for water-penetration resistance according to ICEA T-31-610, using a test pressure of 5 psig.

PART 3 EXECUTION

3.1 INSTALLATION

A. Install cables according to IEEE 576.
B. Proof conduits prior to conductor installation by passing a wire brush mandrel and then a rubber duct swab through the conduit. Separate the wire brush and the rubber swab by 48 to 72 inch (1200 to 1800 mm) on the pull rope.
   1. Wire Brush Mandrel: Consists of a length of brush approximately the size of the conduit inner diameter with stiff steel bristles and an eye on each end for attaching the pull ropes. If an obstruction is felt, pull the brush back and forth repeatedly to break up the obstruction.
   2. Rubber Duct Swab: Consists of a series of rubber discs approximately the size of the conduit inner diameter on a length of steel cable with an eye on each end for attaching the pull ropes. Pull the rubber duct swab through the duct to extract loose debris from the duct.
C. Pull Conductors: Do not exceed manufacturer's recommended maximum pulling tensions and sidewall pressure values.
   1. Where necessary, use manufacturer-approved pulling compound or lubricant that does not deteriorate conductor or insulation.
   2. Use pulling means, including fish tape, cable, rope, and basket-weave cable grips, that do not damage cables and raceways. Do not use rope hitches for pulling attachment to cable.
   3. Use pull-in guides, cable feeders, and draw-in protectors as required to protect cables during installation.
   4. Do not pull cables with ends unsealed. Seal cable ends with rubber tape.
D. Install exposed cables parallel and perpendicular to surfaces of exposed structural members and follow surface contours where possible.
E. Support cables according to Section 260529 "Hangers and Supports for Electrical Systems."
F. Install direct-buried cables on leveled and tamped bed of 3 inch thick, clean sand. Separate cables crossing other cables or piping by a minimum of 2 inch of tamped earth, plus an additional 2 inch of sand. Install permanent markers at ends of cable runs, changes in direction, and buried splices.

G. Install "buried-cable" warning tape 12 inch above cables.

H. In manholes, handholes, pull boxes, junction boxes, and cable vaults, train cables around walls by the longest route from entry to exit; support cables at intervals adequate to prevent sag.

I. Install sufficient cable length to remove cable ends under pulling grips. Remove length of conductor damaged during pulling.

J. Install cable splices at pull points and elsewhere as indicated; use standard kits. Use dead-front separable watertight connectors in manholes and other locations subject to water infiltration.

K. Install terminations at ends of conductors, and seal multiconductor cable ends with standard kits.

L. Install separable insulated-connector components as follows:

1. Protective Cap: At each terminal junction, with one on each terminal to which no feeder is indicated to be connected.
2. Portable Feed-Through Accessory: At each terminal junction, with one on each terminal.
3. Standoff Insulator: At each terminal junction, with one on each terminal.

M. Arc Proofing: Unless otherwise indicated, arc proof medium-voltage cable at locations not protected by conduit, cable tray, direct burial, or termination materials. In addition to arc-proofing tape manufacturer's written instructions, apply arc proofing as follows:

1. Clean cable sheath.
2. Wrap metallic cable components with 10 mil pipe-wrapping tape.
3. Smooth surface contours with electrical insulation putty.
4. Apply arc-proofing tape in one half-lapped layer with coated side toward cable.
5. Band arc-proofing tape with two layers of 1 inch wide half-lapped, adhesive, glass-cloth tape at each end of the arc-proof tape.

N. Seal around cables passing through fire-rated elements according to Section 078413 "Penetration Firestopping."

O. Install fault indicators on each phase where indicated.

P. Ground shields of shielded cable at terminations, splices, and separable insulated connectors. Ground metal bodies of terminators, splices, cable and separable insulated-connector fittings, and hardware.

Q. Ground shields of shielded cable at one point only. Maintain shield continuity and connections to metal connection hardware at all connection points.

R. Identify cables according to Section 260553 "Identification for Electrical Systems." Identify phase and circuit number of each conductor at each splice, termination, pull point, and junction box. Arrange identification so that it is unnecessary to move the cable or conductor to read the identification.

3.2 FIELD QUALITY CONTROL

A. Tests and Inspections:

1. Perform each visual and mechanical inspection and electrical test stated in NETA ATS. Certify compliance with test parameters.
2. After installing medium-voltage cables and before electrical circuitry has been energized, test for compliance with requirements.
3. Perform Partial Discharge test of each new conductor according to NETA ATS, Ch. 7.3.3 and to test equipment manufacturer's recommendations.
4. Perform Dissipation Factor test of each new conductor according to NETA ATS, Ch. 7.3.3 and to test equipment manufacturer's recommendations.

B. Prepare test and inspection reports.

END OF SECTION

SECTION 260519 - LOW-VOLTAGE ELECTRICAL POWER CONDUCTORS AND CABLES

PART 1 GENERAL

1.1 SUMMARY

A. Section Includes:
   1. Copper building wire.
   2. Aluminum building wire.
   3. Metal-clad cable, Type MC.
   4. Fire-alarm wire and cable.
   5. Connectors and splices.

B. Related Requirements:
   1. Section 260010 "Supplemental Requirements for Electrical" for additional abbreviations, definitions, submittals, qualifications, testing agencies, and other Project requirements applicable to Work specified in this Section.
   2. Section 260011 "Facility Performance Requirements for Electrical" for seismic-load, wind-load, acoustical, and other field conditions applicable to Work specified in this Section.
   3. Section 260513 "Medium-Voltage Cables" for single-conductor and multiconductor cables, cable splices, and terminations for electrical distribution systems with 601 to 35,000 V.
   4. Section 260523 "Control-Voltage Electrical Power Cables" for control systems communications cables and Classes 1, 2, and 3 control cables.
   5. Section 271500 "Communications Horizontal Cabling" for cabling used for voice and data circuits.

1.2 ACTION SUBMITTALS

A. Product Data: For each type of product.

B. Product Schedule: Indicate type, use, location, and termination locations.

1.3 INFORMATIONAL SUBMITTALS

A. Field quality-control reports.

PART 2 PRODUCTS

2.1 COPPER BUILDING WIRE

A. Description: Flexible, insulated and uninsulated, drawn copper current-carrying conductor with an overall insulation layer or jacket, or both, rated 600 V or less.

B. Standards:
   1. Listed and labeled as defined in NFPA 70, by a qualified testing agency, and marked for intended location and use.
   2. Conductor and Cable Marking: Comply with wire and cable marking according to UL's "Wire and Cable Marking and Application Guide."

C. Conductors: Copper, complying with ASTM B3 for bare annealed copper and with ASTM B8 for stranded conductors.

D. Conductor Insulation:
   1. Type NM, not allowed.
   2. Type RHH and Type RHW-2. Comply with UL 44.
   3. Type USE-2 and Type SE. Comply with UL 854.
   4. Type THHN and Type THWN-2. Comply with UL 83.
   5. Type XHHW-2. Comply with UL 44.

2.2 METAL-CLAD CABLE, TYPE MC

A. Not allowed

2.3 FIRE-ALARM WIRE AND CABLE

A. General Wire and Cable Requirements: NRTL listed and labeled as complying with NFPA 70, Article 760.
B. Signaling Line Circuits: Twisted, shielded pair, not less than No. 18 AWG.
   1. Circuit Integrity Cable: Twisted shielded pair, NFPA 70, Article 760, Classification CI, for power-limited fire-alarm signal service Type FPL. NRTL listed and labeled as complying with UL 1424 and UL 2196 for a two-hour rating.
C. Non-Power-Limited Circuits: Solid-copper conductors with 600 V rated, 75 deg C, color-coded insulation, and complying with requirements in UL 2196 for a two-hour rating.
   1. Low-Voltage Circuits: No. 16 AWG, minimum, in pathway.
   2. Line-Voltage Circuits: No. 12 AWG, minimum, in pathway.
   3. Multiconductor Armored Cable: NFPA 70, Type MC, copper conductors, Type TFN/THHN conductor insulation, copper drain wire, copper armor with outer jacket with red identifier stripe, NTRL listed for fire-alarm and cable tray installation, plenum rated.

2.4 CONNECTORS AND SPLICES

A. Description: Factory-fabricated connectors, splices, and lugs of size, ampacity rating, material, type, and class for application and service indicated; listed and labeled as defined in NFPA 70, by a qualified testing agency, and marked for intended location and use.
B. Jacketed Cable Connectors: For steel and aluminum jacketed cables, zinc die-cast with set screws, designed to connect conductors specified in this Section.
C. Lugs: One piece, seamless, designed to terminate conductors specified in this Section.
   1. Material: Copper.
   2. Type: Two hole with standard barrels.
   3. Termination: Compression.

PART 3 EXECUTION

3.1 CONDUCTOR MATERIAL APPLICATIONS

A. Feeders:
   1. Copper; solid for No. 10 AWG and smaller; stranded for No. 8 AWG and larger.
   2. Copper for feeders smaller than No. 4 AWG; copper or aluminum for feeders No. 4 AWG and larger. Conductors must be solid for No. 10 AWG and smaller; stranded for No. 8 AWG and larger.
B. Branch Circuits:
   1. Copper:
      a. Solid for No. 10 AWG and smaller; stranded for No. 8 AWG and larger.
      b. Solid for No. 12 AWG and smaller; stranded for No. 10 AWG and larger.
C. Power-Limited Fire Alarm and Control: Solid for No. 12 AWG and smaller.

3.2 CONDUCTOR INSULATION AND MULTICONDUCTOR CABLE APPLICATIONS AND WIRING METHODS

A. Service Entrance: Type USE, single conductor in raceway.
B. Feeders: Type XHHW-2, single conductors in raceway.
C. Branch Circuits: Type THHN/THWN-2, single conductors in raceway.
D. Branch Circuits Concealed in Concrete, below Slabs-on-Grade, and Underground: Type XHHW-2, single conductors in raceway.

3.3 INSTALLATION OF CONDUCTORS AND CABLES

A. Conceal cables in finished walls, ceilings, and floors unless otherwise indicated.

B. Complete raceway installation between conductor and cable termination points according to Section 260533.13 "Conduits for Electrical Systems" prior to pulling conductors and cables.

C. Use manufacturer-approved pulling compound or lubricant where necessary; compound used must not deteriorate conductor or insulation. Do not exceed manufacturer's recommended maximum pulling tensions and sidewall pressure values.

D. Use pulling means, including fish tape, cable, rope, and basket-weave wire/cable grips, that will not damage cables or raceway.

E. Install exposed cables parallel and perpendicular to surfaces of exposed structural members, and follow surface contours where possible.

F. Support cables according to Section 260529 "Hangers and Supports for Electrical Systems."

3.4 INSTALLATION OF FIRE-ALARM WIRE AND CABLE

A. Comply with NFPA 72.

B. Wiring Method: Install wiring in metal pathway according to Section 280528 "Pathways for Electronic Safety and Security."

1. Install plenum cable in environmental airspaces, including plenum ceilings.
2. Fire-alarm circuits and equipment control wiring associated with fire-alarm system must be installed in a dedicated pathway system.
   a. Cables and pathways used for fire-alarm circuits, and equipment control wiring associated with fire-alarm system, may not contain any other wire or cable.
3. Fire-Rated Cables: Use of two-hour, fire-rated fire-alarm cables, NFPA 70, Types MI and CI, is permitted.
4. Signaling Line Circuits: Power-limited fire-alarm cables may not be installed in the same cable or pathway as signaling line circuits.

C. Wiring within Enclosures: Separate power-limited and non-power-limited conductors as recommended by manufacturer. Install conductors parallel with or at right angles to sides and back of the enclosure. Bundle, lace, and train conductors to terminal points with no excess. Connect conductors that are terminated, spliced, or interrupted in any enclosure associated with fire-alarm system to terminal blocks. Mark each terminal according to system's wiring diagrams. Make all connections with approved crimp-on terminal spade lugs, pressure-type terminal blocks, or plug connectors.

D. Cable Taps: Use numbered terminal strips in junction, pull, and outlet boxes, cabinets, or equipment enclosures where circuit connections are made.

E. Color-Coding: Color-code fire-alarm conductors differently from the normal building power wiring. Use one color-code for alarm circuit wiring and another for supervisory circuits. Color-code audible alarm-indicating circuits differently from alarm-initiating circuits. Use different colors for visible alarm-indicating devices. Paint fire-alarm system junction boxes and covers red.

F. Risers: Install at least two vertical cable risers to serve the fire-alarm system. Separate risers in close proximity to each other with a minimum one-hour-rated wall, so the loss of one riser does not prevent receipt or transmission of signals from other floors or zones.

G. Wiring to Remote Alarm Transmitting Device: 1 inch conduit between the fire-alarm control panel and the transmitter. Install number of conductors and electrical supervision for connecting wiring as needed to suit monitoring function.

3.5 CONNECTIONS

A. Tighten electrical connectors and terminals according to manufacturer's published torque-tightening values. If manufacturer's torque values are not indicated, use those specified in UL 486A-486B.

B. Make splices, terminations, and taps that are compatible with conductor material.

C. Wiring at Outlets: Install conductor at each outlet, with at least 6 inch of slack.

3.6 IDENTIFICATION

A. Identify and color-code conductors and cables according to Section 260553 "Identification for Electrical Systems."

B. Identify each spare conductor at each end with identity number and location of other end of conductor, and identify as spare conductor.

3.7 SLEEVE AND SLEEVE-SEAL INSTALLATION FOR ELECTRICAL PENETRATIONS

A. Install sleeves and sleeve seals at penetrations of exterior floor and wall assemblies. Comply with requirements in Section 260544 "Sleeves and Sleeve Seals for Electrical Raceways and Cabling."

3.8 FIRESTOPPING

A. Apply firestopping to electrical penetrations of fire-rated floor and wall assemblies to restore original fire-resistance rating of assembly according to Section 078413 "Penetration Firestopping."

END OF SECTION

SECTION 260523 - CONTROL-VOLTAGE ELECTRICAL POWER CABLES

PART 1 GENERAL

1.1 SUMMARY

A. Section Includes:
1. Backboards.
2. Category 5e balanced twisted pair cable.
3. Balanced twisted pair cable hardware.
4. Twin-axial data highway cable.
5. RS-232 cable.
6. RS-485 cable.
7. Control cable.
8. Control-circuit conductors.
9. Fire-alarm wire and cable.

B. Related Requirements:
1. Section 260010 "Supplemental Requirements for Electrical" for additional abbreviations, definitions, submittals, qualifications, testing agencies, and other Project requirements applicable to Work specified in this Section.
2. Section 260011 "Facility Performance Requirements for Electrical" for seismic-load, wind-load, acoustical, and other field conditions applicable to Work specified in this Section.

1.2 ACTION SUBMITTALS

A. Product Data: For each type of product.
B. Sustainable Design Submittals:

1.3 INFORMATIONAL SUBMITTALS

A. Source quality-control reports.
B. Field quality-control reports.

PART 2 PRODUCTS

2.1 PERFORMANCE REQUIREMENTS

A. Electrical Components, Devices, and Accessories: Listed and labeled as defined in NFPA 70, by a qualified testing agency, and marked for intended location and application.
B. Flame Travel and Smoke Density in Plenums: As determined by testing identical products according to NFPA 262, by a qualified testing agency. Identify products for installation in plenums with appropriate markings of applicable testing agency.
1. Flame Travel Distance: 60 inch or less.
2. Peak Optical Smoke Density: 0.5 or less.
3. Average Optical Smoke Density: 0.15 or less.

C. Flame Travel and Smoke Density for Riser Cables in Non-Plenum Building Spaces: As determined by testing identical products according to UL 1666.
D. Flame Travel and Smoke Density for Cables in Non-Riser Applications and Non-Plenum Building Spaces: As determined by testing identical products according to UL 1685.

2.2 BACKBOARDS

A. Description: Plywood, fire-retardant treated, 3/4 by 48 by 96 inch (19 by 1220 by 2440 mm). Comply with requirements for plywood backing panels in Section 061000 "Rough Carpentry."

B. Painting: Paint plywood on all sides and edges with flat paint. Comply with requirements in Section 099123 "Interior Painting."

2.3 BALANCED TWISTED PAIR CABLE HARDWARE

A. Description: Hardware designed to connect, splice, and terminate balanced twisted pair copper communications cable.

B. General Requirements for Balanced Twisted Pair Cable Hardware:
   1. Comply with the performance requirements of Category 6a.
   2. Comply with TIA-568-C.2, IDC type, with modules designed for punch-down caps or tools.
   3. Cables must be terminated with connecting hardware of same category or higher.

C. Source Limitations: Obtain balanced twisted pair cable hardware from single source from single manufacturer.

D. Connecting Blocks: 110-style IDC for Category 6A. Provide blocks for the number of cables terminated on the block, plus 25 percent spare, integral with connector bodies, including plugs and jacks where indicated.

E. Cross-Connect: Modular array of connecting blocks arranged to terminate building cables and permit interconnection between cables.
   1. Number of Terminals per Field: One for each conductor in assigned cables.

F. Patch Panel: Modular panels housing numbered jack units with IDC-type connectors at each jack location for permanent termination of pair groups of installed cables.
   1. Features:
      a. Universal T568A and T568B wiring labels.
      b. Labeling areas adjacent to conductors.
      c. Replaceable connectors.
      d. 24 or 48 ports.
   2. Construction: 16-gauge steel and mountable on 19 inch equipment racks.
   3. Number of Jacks per Field: One for each four-pair cable indicated.

G. Patch Cords: Factory-made, four-pair cables in 36 inch lengths; terminated with an eight-position modular plug at each end.
   1. Patch cords must have bend-relief-compliant boots and color-coded icons to ensure performance. Patch cords must have latch guards to protect against snagging.

H. Plugs and Plug Assemblies:
   1. Male; eight position; color-coded modular telecommunications connector designed for termination of a single four-pair 100 ohm unshielded or shielded balanced twisted pair cable.
   2. Comply with IEC 60603-7-1, IEC 60603-7-2, IEC 60603-7-3, IEC 60603-7-4, and IEC 60603-7.5.
   3. Marked to indicate transmission performance.

I. Jacks and Jack Assemblies:
   1. Female; eight position; modular; fixed telecommunications connector designed for termination of a single four-pair 100 ohm unshielded or shielded balanced twisted pair cable.
   2. Designed to snap-in to a patch panel or faceplate.
   3. Standards.
      a. Category 6a, unshielded balanced twisted pair cable must comply with IEC 60603-7-41.
      b. Category 6a, shielded balanced twisted pair cable must comply with IEC 60603-7.51.
   4. Marked to indicate transmission performance.

J. Faceplate:
   1. Two port, vertical single gang faceplates designed to mount to single gang wall boxes.
   2. Plastic Faceplate: High-impact plastic. Coordinate color with Section 262726 "Wiring Devices."
   3. For use with snap-in jacks accommodating any combination of balanced twisted pair, optical fiber, and coaxial work area cords.
      a. Flush mounting jacks, positioning the cord at a 45-degree angle.

K. Legend:
   1. Machine printed, in the field, using adhesive-tape label.
   2. Snap-in, clear-label covers and machine-printed paper inserts.

2.4 CONTROL CABLE

A. Plenum-Rated, Paired Cable: NFPA 70, Type CMP.
   1. Multi-pair, twisted, No. 16 AWG, stranded (19x29) tinned-copper conductors.
   2. PVC insulation.
   3. Unshielded.
   4. PVC jacket.
   5. Flame Resistance: Comply with NFPA 262.

2.5 CONTROL-CIRCUIT CONDUCTORS

A. Class 1 Control Circuits: Stranded copper, Type THHN/THWN-2, complying with UL 83 in raceway.
B. Class 2 Control Circuits: Stranded copper, Type THHN/THWN-2, complying with UL 83 in raceway.
C. Class 3 Remote-Control and Signal Circuits: Stranded copper, Type THHN/THWN-2, complying with UL 83 in raceway.
D. Class 2 Control Circuits and Class 3 Remote-Control and Signal Circuits That Supply Critical Circuits: Circuit Integrity (CI) cable.
   1. Smoke control signaling and control circuits.

2.6 FIRE-ALARM WIRE AND CABLE

A. General Wire and Cable Requirements: NRTL listed and labeled as complying with NFPA 70, Article 760.
B. Signaling Line Circuits: Twisted, shielded pair, not less than size as recommended by system manufacturer.
   1. Circuit Integrity Cable: Twisted shielded pair, NFPA 70, Article 760, Classification CI, for power-limited fire-alarm signal service Type FPL. NRTL listed and labeled as complying with UL 1424 and UL 2196 for a two-hour rating.
C. Non-Power-Limited Circuits: Solid-copper conductors with 600 V rated, 75 deg C, color-coded insulation, and complying with requirements in UL 2196 for a two-hour rating.
   1. Control-Voltage Circuits: No. 16 AWG, minimum, in pathway.
   2. Low-Voltage Circuits: No. 12 AWG, minimum, in pathway.

2.7 SOURCE QUALITY CONTROL

A. Factory test balanced twisted pair cables according to TIA-568-C.2.
B. Cable will be considered defective if it does not pass tests and inspections.
C. Prepare test and inspection reports.

PART 3 EXECUTION

3.1 EXAMINATION

A. Test cables on receipt at Project site.
   1. Test each pair of twisted pair cable for open and short circuits.

3.2 INSTALLATION OF RACEWAYS AND BOXES

A. Comply with requirements in Section 260533.13 "Conduits for Electrical Systems" for raceway selection and installation requirements for boxes, conduits, and wireways as supplemented or modified in this Section.
B. Comply with requirements in Section 260533.23 "Surface Raceways for Electrical Systems" for raceway selection and installation requirements for wireways as supplemented or modified in this Section.
C. Comply with requirements in Section 260533.16 "Boxes and Covers for Electrical Systems" for raceway selection and installation requirements for boxes as supplemented or modified in this Section.
   1. Outlet boxes must be no smaller than 4 inch square by 2-1/8 inch deep with extension ring sized to bring edge of ring to within 1/8 inch of the finished wall surface.
   2. Flexible metal conduit must not be used.

D. Comply with TIA-569-D for pull-box sizing and length of conduit and number of bends between pull points.
E. Install manufactured conduit sweeps and long-radius elbows if possible.
F. Raceway Installation in Equipment Rooms:
    1. Position conduit ends adjacent to a corner on backboard if a single piece of plywood is installed, or in the corner of the room if multiple sheets of plywood are installed around perimeter walls of the room.
    2. Install cable trays to route cables if conduits cannot be located in these positions.
    3. Secure conduits to backboard if entering the room from overhead.
    4. Extend conduits 3 inch above finished floor.
    5. Install metal conduits with grounding bushings and connect with grounding conductor to grounding system.
G. Backboards: Install backboards with 96 inch dimension vertical. Butt adjacent sheets tightly and form smooth gap-free corners and joints.

3.3 INSTALLATION OF CONDUCTORS AND CABLES

A. Comply with NECA 1.
B. General Requirements for Cabling:
    1. Comply with TIA-568-C Series of standards.
    2. Comply with BICSI ITSIMM, Ch. 5, "Copper Structured Cabling Systems."
    3. Terminate all conductors; cable must not contain unterminated elements. Make terminations only at indicated outlets, terminals, and cross-connect and patch panels.
    4. Cables may not be spliced and must be continuous from terminal to terminal. Do not splice cable between termination, tap, or junction points.
    5. Cables serving a common system may be grouped in a common raceway. Install network cabling and control wiring and cable in separate raceway from power wiring. Do not group conductors from different systems or different voltages.
    6. Secure and support cables at intervals not exceeding 30 inch and not more than 6 inch from cabinets, boxes, fittings, outlets, racks, frames, and terminals.
    7. Bundle, lace, and train conductors to terminal points without exceeding manufacturer's limitations on bending radii, but not less than radii specified in BICSI ITSIMM, Ch. 5, "Copper Structured Cabling Systems." Install lacing bars and distribution spools.
    8. Do not install bruised, kinked, scored, deformed, or abraded cable. Remove and discard cable if damaged during installation and replace it with new cable.
    9. Cold-Weather Installation: Bring cable to room temperature before dereeling. Do not use heat lamps for heating.
    10. Pulling Cable: Comply with BICSI ITSIMM, Ch. 5, "Copper Structured Cabling Systems." Monitor cable pull tensions.
    11. Support: Do not allow cables to lay on removable ceiling tiles.
    12. Secure: Fasten securely in place with hardware specifically designed and installed so as to not damage cables.
    13. Provide strain relief.
    14. Keep runs short. Allow extra length for connecting to terminals. Do not bend cables in a radius less than 10 times the cable OD. Use sleeves or grommets to protect cables from vibration at points where they pass around sharp corners and through penetrations.
    15. Ground wire must be copper, and grounding methods must comply with IEEE C2. Demonstrate ground resistance.
C. Balanced Twisted Pair Cable Installation:
    1. Comply with TIA-568-C.2.
    2. Install termination hardware as specified in Section 271513 "Communications Copper Horizontal Cabling" unless otherwise indicated.
    3. Do not untwist UTP cables more than 1/2 inch at the point of termination to maintain cable geometry.
D. Installation of Control-Circuit Conductors:
    1. Install wiring in raceways.
E. Open-Cable Installation:

1. Install cabling with horizontal and vertical cable guides in telecommunications spaces with terminating hardware and interconnection equipment.
2. Suspend copper cable not in a wireway or pathway a minimum of 8 inch above ceilings by cable supports not more than 30 inch ???Insert dimension??? apart.
3. Cable must not be run through or on structural members or in contact with pipes, ducts, or other potentially damaging items. Do not run cables between structural members and corrugated panels.

F. Installation of Cable Routed Exposed under Raised Floors:
1. Install plenum-rated cable only.
2. Install cabling after the flooring system has been installed in raised floor areas.
3. Below each feed point, neatly coil a minimum of 72 inch of cable in a coil not less than 12 inch in diameter.

3.4 REMOVAL OF CONDUCTORS AND CABLES

A. Remove abandoned conductors and cables. Abandoned conductors and cables are those installed that are not terminated at equipment and are not identified with a tag for future use.

3.5 CONTROL-CIRCUIT CONDUCTORS

A. Minimum Conductor Sizes:
1. Class 1 remote-control and signal circuits; No 14 AWG.
2. Class 2 low-energy, remote-control, and signal circuits; No. 16 AWG.
3. Class 3 low-energy, remote-control, alarm, and signal circuits; No 12 AWG.

3.6 FIRESTOPPING

A. Comply with requirements in Section 078413 "Penetration Firestopping."
B. Comply with TIA-569-D, Annex A, "Firestopping."
C. Comply with BICSI TDMM, "Firestopping" Chapter.

3.7 GROUNDING

A. For data communication wiring, comply with TIA-607-B and with BICSI TDMM, "Bonding and Grounding (Earthing)" Chapter.
B. For control-voltage wiring and cabling, comply with requirements in Section 260526 "Grounding and Bonding for Electrical Systems."

3.8 IDENTIFICATION

A. Comply with requirements for identification specified in Section 260553 "Identification for Electrical Systems."
B. Identify data and communications system components, wiring, and cabling according to TIA-606-B; label printers must use label stocks, laminating adhesives, and inks complying with UL 969.
C. Identify each wire on each end and at each terminal with a number-coded identification tag. Each wire must have a unique tag.

3.9 FIELD QUALITY CONTROL

A. Tests and Inspections:
1. Visually inspect cable jacket materials for UL or third-party certification markings. Inspect cabling terminations to confirm color-coding for pin assignments, and inspect cabling connections to confirm compliance with TIA-568-C.1.
2. Visually inspect cable placement, cable termination, grounding and bonding, equipment and patch cords, and labeling of all components.

B. End-to-end cabling will be considered defective if it does not pass tests and inspections.
C. Prepare test and inspection reports.

END OF SECTION

SECTION 260526 - GROUNDING AND BONDING FOR ELECTRICAL SYSTEMS

PART 1 GENERAL

1.1 SUMMARY

A. Section Includes:
1. Grounding and bonding conductors.
2. Grounding and bonding clamps.
3. Grounding and bonding bushings.
4. Grounding and bonding hubs.
5. Grounding and bonding connectors.
6. Intersystem bonding bridge grounding connector.
7. Grounding and bonding busbars.
8. Signal reference grids.
9. Grounding (earthing) electrodes.

B. Related Requirements:
1. Section 260010 "Supplemental Requirements for Electrical" for additional abbreviations, definitions, submittals, qualifications, testing agencies, and other Project requirements applicable to Work specified in this Section.
2. Section 260011 "Facility Performance Requirements for Electrical" for seismic-load, wind-load, acoustical, and other field conditions applicable to Work specified in this Section.

1.2 DEFINITIONS

A. BBC: Backbone bonding conductor, for connecting multiple TBBs serving the same floor.
B. PBB: Primary bonding busbar, located in main distribution frame room, ideally near electrical service entrance.
C. RBB: Rack bonding busbar, located in equipment cabinets and racks.
D. SBB: Secondary bonding busbar, located in intermediate distribution frame rooms.
E. TBB: Telecommunications bonding backbone, for connecting SBBs to PBB.
F. TBC: Telecommunications bonding conductor, for connecting PBB to intersystem bonding termination device or busbar at electrical service entrance.
G. TEBC: Telecommunications equipment bonding conductor, for connecting RBBs to SBBs or PBB.
H. UBC: Unit bonding conductor, for connecting individual communications equipment to RBBs or SBBs.

1.3 ACTION SUBMITTALS

A. Product Data:
1. Grounding and bonding conductors.
2. Grounding and bonding clamps.
3. Grounding and bonding bushings.
4. Grounding and bonding hubs.
5. Grounding and bonding connectors.
6. Intersystem bonding bridge grounding connector.
7. Grounding and bonding busbars.
8. Signal reference grids.
9. Grounding (earthing) electrodes.

B. Shop Drawings: Plans showing dimensioned locations of grounding features described in "Field Quality Control for Grounding and Bonding of Electrical Power" Article, including the following:
1. Test wells.
2. Rod electrodes.
3. Ring electrodes.
4. Grounding arrangements and connections for separately derived systems.

C. Field quality-control reports.

1.4 CLOSEOUT SUBMITTALS

A. Operation and Maintenance Data:
1. In addition to items specified in Section 260010 "Supplemental Requirements for Electrical," include the following:
a. Plans showing locations of grounding features described in "Field Quality Control for Grounding and Bonding of Electrical Power" Article, including the following:
1) Test wells.
2) Rod electrodes.
3) Ring electrodes.
4) Grounding arrangements and connections for separately derived systems.
b. Instructions for periodic testing and inspection of grounding features at test wells based on NETA MTS.
1) Tests must determine if ground-resistance or impedance values remain within specified maximums, and instructions must recommend corrective action if values do not.
2) Include recommended testing intervals.

PART 2 PRODUCTS

2.1 GROUNDING AND BONDING CONDUCTORS

A. Equipment Grounding Conductor:
1. General Characteristics: 600 V, insulation to match phase insulation, copper wire or cable, green color, in accordance with Section 260519 "Low-Voltage Electrical Power Conductors and Cables."
B. ASTM - Bare Copper Grounding and Bonding Conductor:
1. Referenced Standards: Complying with one or more of the following:
a. Soft or Annealed Copper Wire: ASTM B3.
b. Concentric-Lay Stranded Copper Conductor: ASTM B8.
c. Tin-Coated Soft or Annealed Copper Wire: ASTM B33.
d. 19-Wire Combination Unilay-Stranded Copper Conductor: ASTM B787/B787M.

2.2 GROUNDING AND BONDING CLAMPS

A. Description: Clamps suitable for attachment of grounding and bonding conductors to grounding electrodes, pipes, tubing, and rebar. Grounding and bonding clamps specified in this article are also suitable for use with communications applications.
B. Performance Criteria:
1. Regulatory Requirements:
a. Listed and labeled in accordance with NFPA 70, by qualified electrical testing laboratory recognized by authorities having jurisdiction, and marked for intended location and application.
2. Listing Criteria:
a. Grounding and Bonding Equipment: UL CCN KDER; including UL 467.
b. Grounding and Bonding Equipment for Communications: UL CCN KDSH; including UL 467.

2.3 GROUNDING AND BONDING BUSHINGS

A. Description: Bonding bushings connect conduit fittings, tubing fittings, threaded metal conduit, and unthreaded metal conduit to metal boxes and equipment enclosures, and have one or more bonding screws intended to provide electrical continuity between bushing and enclosure. Grounding bushings have provision for connection of bonding or grounding conductor and may or may not also have bonding screws.
B. Performance Criteria:
1. Regulatory Requirements:

a. Listed and labeled in accordance with NFPA 70, by qualified electrical testing laboratory recognized by authorities having jurisdiction, and marked for intended location and application.

2. Listing Criteria:

a. Grounding and Bonding Equipment: UL CCN KDER; including UL 467.

2.4 GROUNDING AND BONDING HUBS

A. Description: Hubs with certified grounding or bonding locknut.

B. Performance Criteria:

1. Regulatory Requirements:

a. Listed and labeled in accordance with NFPA 70, by qualified electrical testing laboratory recognized by authorities having jurisdiction, and marked for intended location and application.

2. Listing Criteria:

a. Grounding and Bonding Equipment: UL CCN KDER; including UL 467.

2.5 GROUNDING AND BONDING CONNECTORS

A. Performance Criteria:

1. Regulatory Requirements:

a. Listed and labeled in accordance with NFPA 70, by qualified electrical testing laboratory recognized by authorities having jurisdiction, and marked for intended location and application.

2. Listing Criteria:

a. Grounding and Bonding Equipment: UL CCN KDER; including UL 467.

b. Grounding and Bonding Equipment for Communications: UL CCN KDSH; including UL 467.

2.6 INTERSYSTEM BONDING BRIDGE GROUNDING CONNECTORS

A. Description: Devices that provide means for connecting communications systems grounding and bonding conductors at service equipment or at disconnecting means for buildings or structures.

B. Performance Criteria:

1. Regulatory Requirements:

a. Listed and labeled in accordance with NFPA 70, by qualified electrical testing laboratory recognized by authorities having jurisdiction, and marked for intended location and application.

2. Listing Criteria:

a. Grounding and Bonding Equipment for Communications: UL CCN KDSH; including UL 467.

2.7 GROUNDING AND BONDING BUSBARS

A. Description: Miscellaneous grounding and bonding device that serves as common connection for multiple grounding and bonding conductors.

B. Performance Criteria:

1. Regulatory Requirements:

a. Listed and labeled in accordance with NFPA 70, by qualified electrical testing laboratory recognized by authorities having jurisdiction, and marked for intended location and application.

2. Listing Criteria:

a. Grounding and Bonding Equipment: UL CCN KDER; including UL 467.

2.8 SIGNAL REFERENCE GRIDS

A. Description: Means for providing low-impedance path to ground over a large area, approximating an equipotential plan, while simultaneously mitigating large current spikes from faults or lightning.

B. Performance Criteria:

1. Regulatory Requirements:

a. Listed and labeled in accordance with NFPA 70, by qualified electrical testing laboratory recognized by authorities having jurisdiction, and marked for intended location and application.

2. Listing Criteria:

a. Grounding and Bonding Equipment: UL CCN KDER; including UL 467.

2.9 GROUNDING (EARTHING) ELECTRODES

A. Description: Grounding electrodes include rod electrodes, ring electrodes, metal underground water pipes, metal building frames, concrete-encased electrodes, and pipe and plate electrodes.

B. Performance Criteria:

1. Regulatory Requirements:

a. Listed and labeled in accordance with NFPA 70, by qualified electrical testing laboratory recognized by authorities having jurisdiction, and marked for intended location and application.

2. Listing Criteria:

a. Grounding and Bonding Equipment: UL CCN KDER; including UL 467.

C. Rod Electrode:

1. General Characteristics: Copper-clad steel; 3/4 inch by 10 ft (19 mm by 3 m).

PART 3 EXECUTION

3.1 SELECTION OF GROUNDING AND BONDING PRODUCTS FOR ELECTRICAL POWER

A. Grounding and Bonding Conductors:

1. Provide solid conductor for 8 AWG and smaller, and stranded conductors for 6 AWG and larger unless otherwise indicated.
2. Custom-Length Insulated Equipment Bonding Jumpers: 6 AWG, 19-strand, Type THHN.
3. Bonding Cable: 28 kcmil, 14 strands of 17 AWG conductor, 1/4 inch in diameter.
4. Bonding Conductor: 4 AWG or 6 AWG, stranded conductor.
5. Bonding Jumper: Copper tape, braided conductors terminated with copper ferrules; 1-5/8 inch wide and 1/16 inch thick.
6. Tinned Bonding Jumper: Tinned-copper tape, braided conductors terminated with copper ferrules; 1-5/8 inch wide and 1/16 inch thick.
7. Underground Grounding Conductors: Install bare copper conductor, 4/0 AWG minimum.

B. Grounding and Bonding Connectors:

1. Pipe and Equipment Grounding Conductor Terminations: Bolted connectors.
2. Underground Connections: Welded connectors except at test wells and as otherwise indicated.
3. Connections to Ground Rods at Test Wells: Bolted connectors.
4. Connections to Structural Steel: Welded connectors.

C. Grounding and Bonding Busbars: Provide in electrical equipment rooms, in rooms housing service equipment, and elsewhere as indicated.

D. Substation Signal Reference Grid:

1. Unless more stringent requirements are specified in Contract Documents or manufacturers' published instructions, comply with IEEE C2.

a. Install 6 AWG bonding conductors below grade in a grid pattern on 2 ft (600 mm) centers. Bond grid conductors with exothermic welds where they cross each other.

b. Grid must fill entire area inside equipment yard fence, and extend minimum 6.5 ft (2 m) outside fence, so someone walking or running outside yard may not touch fence or open gate without first stepping inside grid.

c. Bond each metal fence post and gate post to at least two grid conductors.

d. Bond equipment housekeeping pads and sidewalks inside grid to at least two grid conductors.

e. Bond underground metal pipe and conduit passing under grid to nearest grid conductor at both ends.

3.2 SELECTION OF GROUNDING AND BONDING PRODUCTS FOR COMMUNICATIONS

A. Grounding and Bonding Conductors:
   1. Communications Busbar Connections:
      a. TBC: Not smaller than 4/0 AWG and no smaller than largest TBB.
      b. TBB: Not smaller than 2 kcmil per linear ft of conductor length, but not larger than 750 kcmil, unless otherwise indicated on Drawings.
      c. BBC: Not smaller than largest TBB to which it is connected unless otherwise indicated on Drawings.
   2. Cable Tray Connections:
      a. Cable Tray Equipment Grounding Conductor: 4 AWG.
      b. Cable Tray Bonding Jumper: If not supplied by cable manufacturer, provide bonding jumper not smaller than 4 AWG and not longer than 12 inch. If jumper is wire, it must be terminated with lug having two holes and long barrel for two crimps. If jumper is flexible braid, it must be terminated with one- or two-hole ferrule. Attach with bonding screw or connector provided by cable tray manufacturer.
   3. Underground Connections: Not smaller than #4/0 AWG. Provide welded connectors, except bolted connectors may be used in handholes or manholes and as otherwise indicated on Drawings.
B. Grounding and Bonding Busbars:
   1. PBB and SBB:
      a. Dimensions: 1/4 inch thick by 4 inch high (6.3 mm thick by 100 mm high) by 2’ long minimum
      b. Stand-Off Distance: 4 inch.

3.3 INSTALLATION OF GROUNDING AND BONDING FOR ELECTRICAL POWER

A. Comply with manufacturer's published instructions.
B. Reference Standards:
   1. Ground Bonding Common with Lightning Protection System: Comply with NFPA 780 and UL 96 when interconnecting with lightning protection system. Bond electrical power system ground directly to lightning protection system grounding conductor at closest point to electrical service grounding electrode. Use bonding conductor sized same as system grounding electrode conductor, and install in conduit.
   2. Consult Architect for resolution of conflicting requirements.
C. Special Techniques:
   1. Grounding and Bonding Conductors:
      a. Route along shortest and straightest paths possible unless otherwise indicated or required by Code. Avoid obstructing access or placing conductors where they may be subjected to strain, impact, or damage.
      b. Underground Grounding Conductors:
         1) Bury at least 30 inch below grade.
         2) Duct-Bank Grounding Conductor: Bury 12 inch above duct bank when indicated as part of duct-bank installation.
   2. Grounding and Bonding Connectors: Make connections so possibility of galvanic action or electrolysis is minimized. Select connectors, connection hardware, conductors, and connection methods so metals in direct contact are galvanically compatible.
      a. Use electroplated or hot-tin-coated materials to ensure high conductivity and to make contact points closer in order of galvanic series.
      b. Make connections with clean, bare metal at points of contact.
      c. Make aluminum-to-steel connections with stainless steel separators and mechanical clamps.
      d. Make aluminum-to-galvanized-steel connections with tin-plated copper jumpers and mechanical clamps.
      e. Coat and seal connections having dissimilar metals with inert material to prevent future penetration of moisture to contact surfaces.
      f. Bonding Straps and Jumpers: Install in locations accessible for inspection and maintenance except where routed through short lengths of conduit.

1) Bonding to Structure: Bond straps directly to basic structure, taking care not to penetrate adjacent parts.
2) Bonding to Equipment Mounted on Vibration Isolation Hangers and Supports: Install bonding so vibration is not transmitted to rigidly mounted equipment.
3) Use exothermic-welded connectors for outdoor locations; if disconnect-type connection is required, use bolted clamp.

g. Grounding and Bonding for Piping:
1) Metal Water Service Pipe: Install insulated copper grounding conductors, in conduit, from building's main service equipment, or grounding bus, to main metal water service entrances to building. Connect grounding conductors to main metal water service pipes; use bolted clamp connector or bolt lug-type connector to pipe flange by using one of lug bolts of flange. Where dielectric main water fitting is installed, connect grounding conductor on street side of fitting. Bond metal grounding conductor conduit or sleeve to conductor at each end.
2) Water Meter Piping: Use braided-type bonding jumpers to electrically bypass water meters. Connect to pipe with bolted connector.
3) Bond each aboveground portion of gas piping system downstream from equipment shutoff valve.

h. Bonding Interior Metal Ducts: Bond metal air ducts to equipment grounding conductors of associated fans, blowers, electric heaters, and air cleaners. Install bonding jumper to bond across flexible duct connections to achieve continuity.

i. Grounding for Steel Building Structure: Install driven ground rod at base of each corner column and at intermediate exterior columns at distances not more than 60 ft (18 m) apart.

3. Grounding and Bonding Busbars:
a. Install busbar horizontally, on insulated spacers 2 inch minimum from wall, 6 inch above finished floor unless otherwise indicated.
b. Where busbars are indicated on both sides of doorways, route bonding conductor up to top of door frame, across top of doorway, and down; connect to continuation of horizontal busbar.

4. Electrodes:
a. Ground Rods: Drive rods until tops are 2 inch below finished floor or final grade unless otherwise indicated.
1) Interconnect ground rods with grounding electrode conductor below grade and as otherwise indicated. Make connections without exposing steel or damaging coating if any.
2) Use exothermic welds for below-grade connections.

b. For grounding electrode system, install at least three rods spaced at least one-rod length from each other and located at least same distance from other grounding electrodes, and connect to service grounding electrode conductor.

c. Test Wells: Ground rod driven through drilled hole in bottom of handhole. Handholes are specified in Section 260543 "Underground Ducts and Raceways for Electrical Systems," and must be at least 12 inch deep, with cover.
1) Install at least one test well for each service unless otherwise indicated. Install at ground rod electrically closest to service entrance. Set top of test well flush with finished grade or floor.

d. Ring Electrode: Install grounding conductor, electrically connected to each building structure ground rod and to each steel column.
1) Install tinned-copper conductor not less than 4/0 AWG for ring electrode and for taps to building steel.
2) Bury ring electrode not less than 30 inch from building's foundation.

e. Concrete-Encased Electrode (Ufer Ground):
1) Fabricate in accordance with NFPA 70; use minimum of 20 ft (6 m) of bare copper conductor not smaller than 4 AWG.
(a) If concrete foundation is less than 20 ft (6 m) long, coil excess conductor within base of foundation.
(b) Bond grounding conductor to reinforcing steel in at least four locations and to anchor bolts. Extend grounding conductor below grade and connect to building's grounding grid or to grounding electrode external to concrete.

2) Fabricate in accordance with NFPA 70; using electrically conductive coated steel reinforcing bars or rods, at least 20 ft (6.0 m) long. If reinforcing is in multiple pieces, connect together by usual steel tie wires or exothermic welding to create required length.

5. Grounding at Service:
   a. Equipment grounding conductors and grounding electrode conductors must be connected to ground busbar. Install main bonding jumper between neutral and ground buses.
6. Grounding Separately Derived Systems:
   a. Generator: Install grounding electrode(s) at generator location. Electrode must be connected to equipment grounding conductor and to frame of generator.
7. Grounding Underground Distribution System Components:
   a. Duct-Bank Grounding Conductor: Bury 12 inch above duct bank when indicated as part of duct-bank installation.
   b. Comply with IEEE C2 grounding requirements.
   c. Grounding Manholes and Handholes: Install driven ground rod through manhole or handhole floor, close to wall, and set rod depth so 4 inch will extend above finished floor. If necessary, install ground rod before manhole is placed and provide 1/0 AWG bare, tinned-copper conductor from ground rod into manhole through waterproof sleeve in manhole wall. Protect ground rods passing through concrete floor with double wrapping of pressure-sensitive insulating tape or heat-shrunk insulating sleeve from 2 inch above to 6 inch below concrete. Seal floor opening with waterproof, nonshrink grout.
   d. Grounding Connections to Manhole Components: Bond exposed-metal parts such as inserts, cable racks, pulling irons, ladders, and cable shields within each manhole or handhole, to ground rod or grounding conductor. Make connections with 4 AWG minimum, stranded, hard-drawn copper bonding conductor. Train conductors level or plumb around corners and fasten to manhole walls. Connect to cable armor and cable shields in accordance with manufacturer's published instructions with splicing and termination kits.
   e. Pad-Mounted Transformers and Switches: Install two ground rods and ring electrode around pad. Ground pad-mounted equipment and noncurrent-carrying metal items associated with substations by connecting them to underground cable and grounding electrodes. Install tinned-copper conductor not less than 2 AWG for ring electrode and for taps to equipment grounding terminals. Bury ring electrode not less than 6 inch from foundation.
8. Equipment Grounding:
   a. Install insulated equipment grounding conductors with feeders and branch circuits.
   b. Install insulated equipment grounding conductors with the following items, in addition to those required by NFPA 70:
      1) Feeders and branch circuits.
      2) Lighting circuits.
      3) Receptacle circuits.
      4) Single-phase motor and appliance branch circuits.
      5) Three-phase motor and appliance branch circuits.
      6) Flexible raceway runs.
      7) Armored and metal-clad cable runs.
      8) Busway Supply Circuits: Install insulated equipment grounding conductor from grounding bus in switchgear, switchboard, or distribution panel to equipment grounding bar terminal on busway.
   c. Air-Duct Equipment Circuits: Install insulated equipment grounding conductor to duct-mounted electrical devices operating at 120 V and more, including air cleaners, heaters, dampers, humidifiers, and other duct electrical equipment. Bond conductor to each unit and to air duct and connected metallic piping.
   d. Water Heater, Heat-Tracing, and Antifrost Heating Cables: Install separate insulated equipment grounding conductor to each electric water heater and heat-tracing cable. Bond conductor to heater units, piping, connected equipment, and components.
   e. Isolated Grounding Receptacle Circuits: Install insulated equipment grounding conductor connected to receptacle grounding terminal. Isolate conductor from raceway and from panelboard grounding terminals. Terminate at equipment grounding conductor terminal of applicable derived system or service unless otherwise indicated.

f. Isolated Equipment Enclosure Circuits: For designated equipment supplied by branch circuit or feeder, isolate equipment enclosure from supply circuit raceway with nonmetallic raceway fitting listed for the purpose. Install fitting where raceway enters enclosure, and install separate insulated equipment grounding conductor. Isolate conductor from raceway and from panelboard grounding terminals. Terminate at equipment grounding conductor terminal of applicable derived system or service unless otherwise indicated.

g. Poles Supporting Outdoor Lighting Fixtures: Install grounding electrode and separate insulated equipment grounding conductor in addition to grounding conductor installed with branch-circuit conductors.

h. Metallic Fences: Comply with requirements of IEEE C2.

1) Grounding Conductor: Bare copper, not less than 4 AWG

2) Gates: Must be bonded to grounding conductor with flexible bonding jumper.

3) Barbed Wire: Strands must be bonded to grounding conductor.

9. Fence Grounding: Install at maximum intervals of 500 ft except as follows:

a. Fences within 100 ft (30 m) of Buildings, Structures, Walkways, and Roadways: Ground at maximum intervals of 500 feet

1) Gates and Other Fence Openings: Ground fence on each side of opening.

(a) Bond metal gates to gate posts.

(b) Bond across openings, with and without gates, except at openings indicated as intentional fence discontinuities. Use 2 AWG wire and bury it at least 18 inch below finished grade.

b. Protection at Crossings of Overhead Electrical Power Lines: Ground fence at location of crossing and at maximum distance of 150 ft (45 m) on each side of crossing.

c. Grounding Method: At each grounding location, drive grounding rod vertically until top is 6 inch below finished grade. Connect rod to fence with 6 AWG conductor. Connect conductor to each fence component at grounding location.

d. Bonding Method for Gates: Connect bonding jumper between gate post and gate frame.

e. Bonding to Lightning-Protection System: If fence terminates at lightning-protected building or structure, ground fence and bond fence grounding conductor to lightning-protection down conductor or lightning-protection grounding conductor, complying with NFPA 780.

3.4 INSTALLATION OF BONDING FOR COMMUNICATIONS

A. Grounding of Communications: Bond PBB and SBBs to grounding electrode conductors at electrical power service entrance, and at electrical power derived systems serving communications equipment, using intersystem bonding termination device.

1. Structural Steel: Where structural steel of steel frame building is readily accessible within room or space, bond each SBB and PBB to vertical steel of building frame.

B. Comply with manufacturer's published instructions.

C. Reference Standards:

1. Bonding of Communications: Unless more stringent requirements are specified in Contract Documents or manufacturers' published instructions, comply with BICSI N3.

2. Consult Architect for resolution of conflicting requirements.

D. Special Techniques:

1. Bonding of Busbars:

a. Indicate locations of grounding busbars on Drawings. Install busbars horizontally, on insulated spacers 12 inch above finished floor unless otherwise indicated.

b. Where busbars are indicated on both sides of doorways, route bonding conductor up to top of door frame, across top of doorway, and down; connect to continuation of horizontal busbar.

2. Bonding Conductors:

a. Stacking of conductors under a single bolt is not permitted when connecting to busbars.

b. Assemble wire connector to conductor, complying with manufacturer's published instructions and as follows:

1) Use crimping tool and die specific to connector.

2) Pretwist conductor.

3) Apply antioxidant compound to bolted and compression connections.

c. Install in straightest and shortest route between origination and termination point, and no longer than required. Bend radius must not be smaller than 10 times diameter of conductor. No single bend may exceed 90 degrees.

d. Install without splices.

e. Support conductors at not more than 36 inch intervals.

f. Outside telecommunications rooms, install conductors in metric designator 21 (trade size 3/4) PVC-80 conduit until conduit enters telecommunications room. Install bonding conductors in EMT-A or EMT-SS when routed through plenum. Do not install bonding conductors in EMT-S unless otherwise indicated on Drawings.

1) If bonding conductor must be installed in EMT-S or other ferrous metallic raceway, bond conductor to raceway using grounding bushing and bond both ends of raceway to SBB.

3. Provide TBC and terminate ends to PBB and intersystem bonding busbar at electrical service entrance in accordance with Section 250.94, "Bonding for Communication Systems," of NFPA 70.

4. Busbar Interconnections: Bond SBBs to PBB with TBBs. If more than one TBB is installed, bond TBBs together with BBCs where required by TIA-607.

5. Communications Enclosures: Bond metallic enclosures of telecommunications equipment with UBCs to nearest SBB or PBB.

6. Equipment Racks: Bond metallic components of enclosures to RBB using UBCs. Provide top-mounted RBB if not provided by enclosure or rack manufacturer. Bond RBB to SBB with TEBC. Power connection must comply with NFPA 70; equipment grounding conductor in power cord of cord- and plug-connected equipment must be considered supplemental to bonding requirements in this Section.

7. Shielded Cable: Bond shield of shielded cable to SBB in communications rooms and spaces. Comply with TIA-568.1 and TIA-568.2 when grounding shielded balanced twisted-pair cables.

8. Primary Protector: Bond to PBB with insulated bonding conductor.

9. Electrical Power Panelboards: Where electrical panelboards for communications equipment are located in same room or space, bond each ground bar of panelboard to SBB.

10. Cable Trays: Provide continuous electrical path by installing bonding clips and jumpers. Bond each end to nearest SBB.

11. Ladder Racks: Provide continuous electrical path by installing bonding clips and jumpers. Bond each end to nearest SBB.

12. Access Floors: Bond metal parts of access floors to SBB.

E. Identification of Communications:

1. Labels must be preprinted or computer-printed type.

a. Label PBB(s) with "ts-PBB," where "ts" is telecommunications space identifier for location of PBB.

b. Label SBB(s) with "ts-SBB," where "ts" is telecommunications space identifier for location of SBB.

c. Label TBC, TBBs, and BBCs at attachment points with legend: "WARNING! COMMUNICATIONS BONDING CONDUCTOR. DO NOT REMOVE OR DISCONNECT!"

3.5 INSTALLATION OF GROUNDING AND BONDING FOR TOWERS AND ANTENNAS

A. Special Techniques:

1. Ring Electrode: Buried at least 30 inch below grade and at least 24 inch from base of tower or mounting.

2. Bond each tower base and metallic frame of dish to ring electrode, buried at least 18 inch below grade.

3. Bond ring electrode and antenna bonding conductors to equipment room PBB or SBB, buried at least 30 inch below grade.

4. Bond metal fences located within 6 ft (1.8 m) of towers and antennas to ring electrode, buried at least 18 inch below grade.

3.6 FIELD QUALITY CONTROL FOR GROUNDING AND BONDING OF ELECTRICAL POWER

A. Field tests and inspections must be witnessed by authorities having jurisdiction

B. Tests and Inspections:

1. After installing grounding system but before permanent electrical circuits have been energized, test for compliance with requirements.
2. Inspect physical and mechanical condition. Verify tightness of accessible, bolted, electrical connections with calibrated torque wrench in accordance with manufacturer's published instructions.
3. Test completed grounding system at each location where maximum ground-resistance level is specified, at service disconnect enclosure grounding terminal, at ground test wells. Make tests at ground rods before conductors are connected.
   a. Measure ground resistance no fewer than two full days after last trace of precipitation and without soil being moistened by means other than natural drainage or seepage and without chemical treatment or other artificial means of reducing natural ground resistance.
   b. Perform tests by fall-of-potential method in accordance with IEEE Std 81.
   c. Excessive Ground Resistance: If resistance to ground exceeds specified values, notify Architect promptly and include recommendations to reduce ground resistance.
4. Prepare dimensioned Drawings locating each test well, ground rod and ground-rod assembly, and other grounding electrodes. Identify each by letter in alphabetical order, and key to record of tests and observations. Include number of rods driven and their depth at each location, and include observations of weather and other phenomena that may affect test results. Describe measures taken to improve test results.

C. Nonconforming Work:
1. Grounding system will be considered defective if it does not pass tests and inspections.
2. Remove and replace defective components and retest.

D. Collect, assemble, and submit test and inspection reports.
1. Report measured ground resistances that exceed the following values:
   a. Power and Lighting Equipment or System with Capacity of 500 kVA and Less: 10 Ω.
   b. Power and Lighting Equipment or System with Capacity of 500 to 1000 kVA: 5 Ω.
   c. Power and Lighting Equipment or System with Capacity More Than 1000 kVA: 3 Ω.
   d. Power Distribution Units or Panelboards Serving Electronic Equipment: 1 Ω.
   e. Substations and Pad-Mounted Equipment: 5 Ω.
   f. Manhole Grounds: 10 Ω.

3.7 FIELD QUALITY CONTROL FOR BONDING OF COMMUNICATIONS

A. Field tests and inspections must be witnessed by authorities having jurisdiction.

B. Tests and Inspections:
1. Inspect physical and mechanical condition. Verify tightness of accessible, bolted, electrical connections with calibrated torque wrench according to manufacturer's published instructions.
2. Test bonding connections of system using AC earth ground-resistance tester, taking two-point bonding measurements in each telecommunications equipment room containing PBB or SBB, using process recommended by BICSI N1. Conduct tests with facility in operation.
   a. Measure resistance between PBB and electrical service intersystem termination point. Maximum acceptable value is 100 mΩ.
      1) If measured resistance from electrical service equipment to ground exceeds 5 Ω, notify Architect and include recommendations to reduce resistance to ground.
   b. Measure resistance between SBBs and PBB. Maximum acceptable value is 100 mΩ.
3. Test for ground loop currents using digital clamp-on ammeter, with full scale not more than 10 A, displaying current in increments of 0.01 A at accuracy of plus or minus 2.0 percent.
   a. With grounding infrastructure completed and communications system electronics operating, measure current in bonding conductors connected to PBB and to SBBs. Maximum acceptable AC current level is 1 A.

C. Nonconforming Work:
1. Communications bonding will be considered defective if it does not pass tests and inspections.
2. Remove and replace defective units and retest.

D. Collect, assemble, and submit test and inspection reports.

3.8 PROTECTION

A. After installation, protect grounding and bonding cables and equipment from construction activities. Remove and replace items that are contaminated, defaced, damaged, or otherwise caused to be unfit for use prior to acceptance by Owner.

END OF SECTION

SECTION 260529 - HANGERS AND SUPPORTS FOR ELECTRICAL SYSTEMS

PART 1 GENERAL

1.1 SUMMARY

A. Section Includes:
   1. Support, anchorage, and attachment components.
   2. Fabricated metal equipment support assemblies.
B. Related Requirements:
   1. Section 260010 "Supplemental Requirements for Electrical" for additional abbreviations, definitions, submittals, qualifications, testing agencies, and other Project requirements applicable to Work specified in this Section.
   2. Section 260011 "Facility Performance Requirements for Electrical" for seismic-load, wind-load, acoustical, and other field conditions applicable to Work specified in this Section.

1.2 ACTION SUBMITTALS

A. Product Data: For each type of product.
B. Shop Drawings: Signed and sealed by a qualified professional engineer. For fabrication and installation details for electrical hangers and support systems.
   1. Hangers. Include product data for components.
   2. Slotted support systems.
   3. Equipment supports.
   4. Vibration Isolation Base Details: Detail fabrication including anchorages and attachments to structure and to supported equipment. Include adjustable motor bases, rails, and frames for equipment mounting.
C. Delegated Design Submittals: For hangers and supports for electrical systems.
   1. Include design calculations and details of hangers.
   2. Include design calculations for seismic restraints.

1.3 INFORMATIONAL SUBMITTALS

A. Welding certificates.

PART 2 PRODUCTS

2.1 PERFORMANCE REQUIREMENTS

A. Delegated Design: Engage a qualified structural professional engineer to design hanger and support system.
B. Surface-Burning Characteristics: Comply with ASTM E84; testing by a qualified testing agency. Identify products with appropriate markings of applicable testing agency.
   1. Flame Rating: Class 1.
   2. Self-extinguishing according to ASTM D635.

2.2 SUPPORT, ANCHORAGE, AND ATTACHMENT COMPONENTS

A. Steel Slotted Support Systems: Preformed steel channels and angles with minimum 13/32 inch diameter holes at a maximum of 8 inch on center in at least one surface.
   1. Standard: Comply with MFMA-4 factory-fabricated components for field assembly.
   2. Material for Channel, Fittings, and Accessories: Galvanized steel.
   3. Channel Width: Selected for applicable load criteria.
   4. Metallic Coatings: Hot-dip galvanized after fabrication and applied according to MFMA-4.
   5. Painted Coatings: Manufacturer's standard painted coating applied according to MFMA-4.

6. Protect finishes on exposed surfaces from damage by applying a strippable, temporary protective covering before shipping.

B. Conduit and Cable Support Devices: Steel hangers, clamps, and associated fittings, designed for types and sizes of raceway or cable to be supported.

C. Support for Conductors in Vertical Conduit: Factory-fabricated assembly consisting of threaded body and insulating wedging plug or plugs for nonarmored electrical conductors or cables in riser conduits. Plugs must have number, size, and shape of conductor gripping pieces as required to suit individual conductors or cables supported. Body must be made of malleable iron.

D. Structural Steel for Fabricated Supports and Restraints: ASTM A36/A36M steel plates, shapes, and bars; black and galvanized.

E. Mounting, Anchoring, and Attachment Components: Items for fastening electrical items or their supports to building surfaces include the following:

1. Powder-Actuated Fasteners: Threaded-steel stud, for use in hardened portland cement concrete, steel, or wood, with tension, shear, and pullout capacities appropriate for supported loads and building materials where used.
2. Mechanical-Expansion Anchors: Insert-wedge-type, stainless steel, for use in hardened portland cement concrete, with tension, shear, and pullout capacities appropriate for supported loads and building materials where used.
3. Concrete Inserts: Steel or malleable-iron, slotted support system units are similar to MSS Type 18 units and comply with MFMA-4 or MSS SP-58.
4. Clamps for Attachment to Steel Structural Elements: MSS SP-58 units are suitable for attached structural element.
5. Through Bolts: Structural type, hex head, and high strength. Comply with ASTM F3125/F3125M, Grade A325 (Grade A325M).
6. Toggle Bolts: All steel springhead type.
7. Hanger Rods: Threaded steel.

2.3 FABRICATED METAL EQUIPMENT SUPPORT ASSEMBLIES

A. Description: Welded or bolted structural-steel shapes, shop or field fabricated to fit dimensions of supported equipment.

B. Materials: Comply with requirements in Section 055000 "Metal Fabrications" for steel shapes and plates.

PART 3 EXECUTION

3.1 SELECTION

A. Comply with the following standards for selection and installation of hangers and supports, except where requirements on Drawings or in this Section are stricter:

1. NECA NEIS 101
2. NECA NEIS 105.

B. Comply with requirements in Section 078413 "Penetration Firestopping" for firestopping materials and installation for penetrations through fire-rated walls, ceilings, and assemblies.

C. Comply with requirements for raceways specified in Section 260533.13 "Conduits for Electrical Systems."

D. Comply with requirements for boxes specified in Section 260533.16 "Boxes and Covers for Electrical Systems."

E. Provide vibration and seismic controls with hangers and supports in accordance with requirements specified in "Section 260548 "Vibration and Seismic Controls for Electrical Systems."

F. Maximum Support Spacing and Minimum Hanger Rod Size for Raceways: Space supports for EMT, IMC, and ERMC as required by scheduled in NECA NEIS 1, where its Table 1 lists maximum spacings that are less than those stated in NFPA 70. Minimum rod size must be 1/4 inch in diameter.

G. Multiple Raceways or Cables: Install trapeze-type supports fabricated with steel slotted or other support system, sized so capacity can be increased by at least 25 percent in future without exceeding specified design load limits.

1. Secure raceways and cables to these supports with two-bolt conduit clamps.

3.2 INSTALLATION OF SUPPORTS

A. Comply with NECA NEIS 101 for installation requirements except as specified in this article.

B. Raceway Support Methods: In addition to methods described in NECA NEIS 1, EMT and ERMC may be supported by openings through structure members, in accordance with NFPA 70.

C. Strength of Support Assemblies: Where not indicated, select sizes of components so strength will be adequate to carry present and future static loads within specified loading limits. Minimum static design load used for strength determination must be weight of supported components plus 200 lb (90 kg).

D. Mounting and Anchorage of Surface-Mounted Equipment and Components: Anchor and fasten electrical items and their supports to building structural elements by the following methods unless otherwise indicated by code:

1. To Wood: Fasten with lag screws or through bolts.
2. To New Concrete: Bolt to concrete inserts.
3. To Masonry: Approved toggle-type bolts on hollow masonry units and expansion anchor fasteners on solid masonry units.
4. To Existing Concrete: Expansion anchor fasteners.
5. Instead of expansion anchors, powder-actuated driven threaded studs provided with lock washers and nuts may be used in existing standard-weight concrete 4 inch thick or greater. Do not use for anchorage to lightweight-aggregate concrete or for slabs less than 4 inch thick.
6. To Steel: Welded threaded studs complying with AWS D1.1/D1.1M, with lock washers and nuts.
7. To Light Steel: Sheet metal screws.
8. Items Mounted on Hollow Walls and Nonstructural Building Surfaces: Mount cabinets, panelboards, disconnect switches, control enclosures, pull and junction boxes, transformers, and other devices on slotted-channel racks attached to substrate by means that comply with seismic-restraint strength and anchorage requirements.

E. Drill holes for expansion anchors in concrete at locations and to depths that avoid the need for reinforcing bars.

3.3 INSTALLATION OF FABRICATED METAL SUPPORTS

A. Comply with installation requirements in Section 055000 "Metal Fabrications" for site-fabricated metal supports.

B. Cut, fit, and place miscellaneous metal supports accurately in location, alignment, and elevation to support and anchor electrical materials and equipment.

C. Field Welding: Comply with AWS D1.1/D1.1M. Submit welding certificates.

END OF SECTION

SECTION 260533 - RACEWAY AND BOXES FOR ELECTRICAL SYSTEMS

PART 1 GENERAL

1.1 SUMMARY

A. Section Includes:
1. Type EMT-A and Type EMT-SS raceways and elbows.
2. Type EMT-S raceways and elbows.
3. Type ENT raceways and fittings.
4. Type ERMC-A and Type ERMC-SS raceways, elbows, couplings, and nipples.
5. Type ERMC-S raceways, elbows, couplings, and nipples.
6. Type FMC-S and Type FMC-A raceways.
7. Type IMC raceways.
8. Type LFMC raceways.
9. Type PVC raceways and fittings.
10. Fittings for conduit, tubing, and cable.
11. Threaded metal joint compound.
12. Solvent cements.
13. Surface metal raceways and fittings.
14. Wireways and auxiliary gutters.
15. Metallic outlet boxes, device boxes, rings, and covers.
16. Nonmetallic outlet boxes, device boxes, rings, and covers.
17. Termination boxes.
18. Cabinets, cutout boxes, junction boxes, and pull boxes.
19. Cover plates for device boxes.
20. Hoods for outlet boxes.

B. Related Requirements:
1. Section 260010 "Supplemental Requirements for Electrical" for additional abbreviations, definitions, submittals, qualifications, testing agencies, and other Project requirements applicable to Work specified in this Section.
2. Section 260011 "Facility Performance Requirements for Electrical" for seismic-load, wind-load, acoustical, and other field conditions applicable to Work specified in this Section.

1.2 ACTION SUBMITTALS

A. Product Data: For the following:
1. Wireways and auxiliary gutters.
2. Surface metal raceways.
3. Floor boxes.
4. Cabinets and cutout boxes.

B. Shop Drawings: For custom enclosures and cabinets. Include plans, elevations, sections, and attachment details. Show that floor boxes are located to avoid interferences and are structurally allowable. Indicate floor thickness at location where boxes are embedded in concrete floors and underfloor clearances where boxes are installed in raised floors.

1.3 INFORMATIONAL SUBMITTALS

A. Manufacturers' Instructions:
1. For Type ERMC-S-PVC.

PART 2 PRODUCTS

2.1 TYPE EMT-S RACEWAYS AND ELBOWS

A. Performance Criteria:
1. Regulatory Requirements: Listed and labeled in accordance with NFPA 70 and marked for intended location and use.
2. General Characteristics: UL 797 and UL Category Control Number FJMX.

B. Steel Electrical Metal Tubing (EMT-S) and Elbows:
1. Material: Steel.
2. Options:
a. Exterior Coating: Zinc.
b. Interior Coating: Zinc with organic top coating.
c. Minimum Trade Size: Metric designator 16 (trade size 1/2).

2.2 TYPE ERMC-S RACEWAYS, ELBOWS, COUPLINGS, AND NIPPLES

A. Performance Criteria:
1. Regulatory Requirements: Listed and labeled in accordance with NFPA 70 and marked for intended location and use.
2. General Characteristics: UL 6 and UL Category Control Number DYIX.

B. Galvanized-Steel Electrical Rigid Metal Conduit (ERMC-S-G), Elbows, Couplings, and Nipples:
1. Exterior Coating: Zinc.
2. Options:
a. Interior Coating: Zinc with organic top coating.
b. Minimum Trade Size: Metric designator 16 (trade size 1/2).

C. PVC-Coated-Steel Electrical Rigid Metal Conduit (ERMC-S-PVC), Elbows, Couplings, and Nipples:
1. Options:
a. Exterior Coating: PVC complying with NEMA RN 1.
b. Interior Coating: Zinc with organic top coating.
c. Minimum Trade Size: Metric designator 16 (trade size 1/2).
d. Colors: As indicated on Drawings.
e. Conduit Fittings for Hazardous (Classified) Locations: UL 1203.
f. Expansion and Deflection Fittings: UL 651 with flexible external bonding jumper.

2.3 TYPE FMC-S RACEWAYS

A. Performance Criteria:
1. Regulatory Requirements: Listed and labeled in accordance with NFPA 70 and marked for intended location and use.
2. General Characteristics: UL 1 and UL Category Control Number DXUZ.

B. Steel Flexible Metal Conduit (FMC-S):
1. Material: Steel.
2. Options:
a. Minimum Trade Size: Metric designator 16 (trade size 1/2).

2.4 TYPE LFMC RACEWAYS

A. Performance Criteria:
1. Regulatory Requirements: Listed and labeled in accordance with NFPA 70 and marked for intended location and use.
2. General Characteristics: UL 360 and UL Category Control Number DXHR.

B. Steel Liquidtight Flexible Metal Conduit (LFMC-S):
1. Material: Steel.
2. Options:

a. Minimum Trade Size: Metric designator 16 (trade size 1/2)

2.5 TYPE PVC RACEWAYS AND FITTINGS

A. Performance Criteria:
1. Regulatory Requirements: Listed and labeled in accordance with NFPA 70 and marked for intended location and use.
2. General Characteristics: UL 651 and UL Category Control Number DZYR.

B. Schedule 40 Rigid PVC Conduit (PVC-40) and Fittings:
1. Dimensional Specifications: Schedule 40.
2. Options:
a. Minimum Trade Size: Metric designator 16 (trade size 1/2)
b. Markings: For use with maximum 90 deg C wire

C. Schedule 80 Rigid PVC Conduit (PVC-80) and Fittings:
1. Dimensional Specifications: Schedule 80.
2. Options:
a. Minimum Trade Size: Metric designator 16 (trade size 1/2)
b. Markings: For use with maximum 90 deg C wire.

D. Type A Rigid PVC Concrete-Encased Conduit (PVC-A) and Fittings:
1. Dimensional Specifications: Type A.
2. Options:
a. Minimum Trade Size: Metric designator 16 (trade size 1/2)

2.6 FITTINGS FOR CONDUIT, TUBING, AND CABLE

A. Performance Criteria:
1. Regulatory Requirements: Listed and labeled in accordance with NFPA 70 and marked for intended location and use.

B. Fittings for Type ERMC, Type IMC, and Type PVC Raceways:
1. General Characteristics: UL 514B and UL Category Control Number DWTT.
2. Options:
a. Material: Steel.
b. Coupling Method: Compression coupling. Raintight compression coupling with distinctive color gland nut where exposed to water.
c. Conduit Fittings for Hazardous (Classified) Locations: UL 1203.
d. Expansion and Deflection Fittings: UL 651 with flexible external bonding jumper.

C. Fittings for Type EMT Raceways:
1. General Characteristics: UL 514B and UL Category Control Number FKAV.
2. Options:
a. Material: Steel.
b. Coupling Method: Compression coupling.
c. Conduit Fittings for Hazardous (Classified) Locations: UL 1203.
d. Expansion and Deflection Fittings: UL 651 with flexible external bonding jumper.

D. Fittings for Type FMC Raceways:
1. General Characteristics: UL 514B and UL Category Control Number ILNR.

E. Fittings for Type LFMC Raceways:
1. General Characteristics: UL 514B and UL Category Control Number DXAS.

2.7 ELECTRICALLY CONDUCTIVE CORROSION-RESISTANT COMPOUNDS FOR THREADED CONDUIT

A. Performance Criteria:
1. Regulatory Requirements: Listed and labeled in accordance with NFPA 70 and marked for intended location and use.
2. General Characteristics: UL 2419 and UL Category Control Number FOIZ.

2.8 SOLVENT CEMENTS

A. Performance Criteria:
   1. Regulatory Requirements: Listed and labeled in accordance with NFPA 70 and marked for intended location and use.
   2. General Characteristics: As recommended by conduit manufacturer in accordance with UL 514B and UL Category Control Number DWTT.
   3. Sustainability Characteristics:

2.9 METALLIC OUTLET BOXES, DEVICE BOXES, RINGS, AND COVERS

A. Performance Criteria:
   1. Regulatory Requirements: Listed and labeled in accordance with NFPA 70 and marked for intended location and use.
   2. General Characteristics: UL 514A and UL Category Control Number QCIT.
B. Metallic Outlet Boxes:
   1. Description: Box having pryout openings, knockouts, threaded entries, or hubs in either the sides of the back, or both, for entrance of conduit, conduit or cable fittings, or cables, with provisions for mounting outlet box cover, but without provisions for mounting wiring device directly to box.
   2. Options:
      a. Material: Sheet steel.
      b. Sheet Metal Depth: Minimum 2 inch.
      c. Luminaire Outlet Boxes and Covers: Nonadjustable, listed and labeled for attachment of luminaire weighing up to 50 lb (23 kg).
      d. Paddle Fan Outlet Boxes and Covers: Nonadjustable, designed for attachment of paddle fan weighing up to 70 lb (32 kg).
C. Metallic Conduit Bodies:
   1. Description: Means for providing access to interior of conduit or tubing system through one or more removable covers at junction or terminal point. In the United States, conduit bodies are listed in accordance with outlet box requirements.
D. Metallic Device Boxes:
   1. Description: Box with provisions for mounting wiring device directly to box.
   2. Options:
      a. Material: Sheet steel.
      b. Sheet Metal Depth: minimum 2 inch
      c. Cast-Metal Depth: minimum 2.4 inch.
E. Metallic Floor Boxes and Floor Box Covers:
   1. Description: Box mounted in floor with floor box cover and other components to complete floor box enclosure.
F. Metallic Concrete Boxes and Covers:
   1. Description: Box intended for use in poured concrete.

2.10 NONMETALLIC OUTLET BOXES, DEVICE BOXES, RINGS, AND COVERS

A. Performance Criteria:
   1. Regulatory Requirements: Listed and labeled in accordance with NFPA 70 and marked for intended location and use.
   2. General Characteristics: UL 514C and UL Category Control Number QCMZ.
B. Nonmetallic Floor Boxes and Floor Box Covers:
   1. Description: Box mounted in floor with floor box cover and other components to complete floor box enclosure.
C. Nonmetallic Concrete Boxes and Covers:
   1. Description: Box intended for use in poured concrete.

2.11 TERMINATION BOXES

A. Description: Enclosure for termination base consisting of lengths of bus bars, terminal strips, or terminal blocks with provision for wire connectors to accommodate incoming or outgoing conductors or both.

B. Performance Criteria:
   1. Regulatory Requirements: Listed and labeled in accordance with NFPA 70 and marked for intended location and use.
   2. General Characteristics: UL 1773 and UL Category Control Number XCKT.

C. Termination Boxes and Termination Bases for Installation on Line Side of Service Equipment:
   1. Additional Characteristics: Listed and labeled for installation on line side of service equipment.

D. Termination Boxes and Termination Bases for Installation on Load Side of Service Equipment:
   1. Additional Characteristics: Listed and labeled for installation on load side of service equipment.

2.12 CABINETS, CUTOUT BOXES, JUNCTION BOXES, AND PULL BOXES

A. Performance Criteria:
   1. Regulatory Requirements: Listed and labeled in accordance with NFPA 70 and marked for intended location and use.
   2. General Characteristics:
      a. Non-Environmental Characteristics: UL 50.
      b. Environmental Characteristics: UL 50E.

B. Indoor Sheet Metal Cabinets:
   1. Description: Enclosure provided with frame, mat, or trim in which swinging door or doors are or can be hung.
   2. Additional Characteristics: UL Category Control Number CYIV.
   3. Options:
      a. Degree of Protection: Type 1 or type 3R stainless when exposed to water or humid environments.

C. Indoor Sheet Metal Cutout Boxes:
   1. Description: Enclosure that has swinging doors or covers secured directly to and telescoping with walls of enclosure.
   2. Additional Characteristics: UL Category Control Number CYIV.
   3. Options:
      a. Degree of Protection: Type 1 or type 3R stainless when exposed to water or humid environments.

D. Indoor Sheet Metal Junction and Pull Boxes:
   1. Description: Box with a blank cover that serves the purpose of joining different runs of raceway or cable.
   2. Additional Characteristics: UL Category Control Number BGUZ.
   3. Options:
      a. Degree of Protection: Type 1 or type 3R stainless when exposed to water or humid environments.

E. Outdoor Sheet Metal Cabinets:
   1. Description: Enclosure provided with frame, mat, or trim in which swinging door or doors are or can be hung.
   2. Additional Characteristics: UL Category Control Number CYIV.
      a. Options:
      b. Degree of Protection: Type 3R stainless

F. Outdoor Sheet Metal Cutout Boxes:
   1. Description: Enclosure that has swinging doors or covers secured directly to and telescoping with walls of enclosure.
   2. Additional Characteristics: UL Category Control Number CYIV.
      a. Options:
      b. Degree of Protection: Type 3R Stainless

G. Outdoor Sheet Metal Junction and Pull Boxes:

1. Description: Box with a blank cover that serves the purpose of joining different runs of raceway or cable.
2. Additional Characteristics: UL Category Control Number BGUZ.
   a. Options:
   b. Degree of Protection: Type 3R Stainless

2.13 COVER PLATES FOR DEVICES BOXES

A. Performance Criteria:
   1. Regulatory Requirements: Listed and labeled in accordance with NFPA 70 and marked for intended location and use.
   2. General Characteristics:
      a. Reference Standards: UL 514D and UL Category Control Numbers QCIT and QCMZ.
      b. Wallplate-Securing Screws: Metal with head color to match wallplate finish.
B. Metallic Cover Plates for Device Boxes:
   1. Options:
      a. Damp and Wet Locations: Listed, labeled, and marked for location and use. Provide gaskets and accessories necessary for compliance with listing.
      b. Wallplate Material: 0.032 inch thick Type 302/304 non-magnetic stainless steel with brushed finish.
C. Nonmetallic Cover Plates for Device Boxes:
   1. Options:
      a. Damp and Wet Locations: Listed, labeled, and marked for location and use. Provide gaskets and accessories necessary for compliance with listing.
      b. Wallplate Material: 0.060 inch thick high-impact thermoplastic (nylon) with smooth finish and color matching wiring device
      c. Color: White.

2.14 HOODS FOR OUTLET BOXES

A. Performance Criteria:
   1. Regulatory Requirements: Listed and labeled in accordance with NFPA 70 and marked for intended location and use.
   2. General Characteristics:
      a. Reference Standards:
         1) UL 514D and UL Category Control Numbers QCIT and QCMZ.
         2) Receptacle, hood, cover plate, gaskets, and seals comply with UL 498 Supplement SA when mated with box or enclosure complying with UL 514A, UL 514C, or UL 50E.
   3. Mounts to box using fasteners different from wiring device.
B. Retractable or Reattachable Hoods for Outlet Boxes:
   1. Options:
      a. Provides gray, weatherproof, "while-in-use" cover.
C. Extra-Duty, While-in-Use Hoods for Outlet Boxes:
   1. Additional Characteristics: Marked "Extra-Duty" in accordance with UL 514D.
   2. Options:
      a. Provides gray, weatherproof, "while-in-use" cover.
      b. Manufacturer may combine nonmetallic device box with hood as extra-duty rated assembly.

PART 3 EXECUTION

3.1 SELECTION OF RACEWAYS

A. Unless more stringent requirements are specified in Contract Documents or manufacturers' written instructions, comply with NFPA 70 for selection of raceways. Consult Architect for resolution of conflicting requirements.

B. Outdoors:
   1. Exposed and Subject to Severe Physical Damage: ERMC.
   2. Exposed and Subject to Physical Damage: ERMC.
      a. Locations less than 2.5 m (8 ft) above finished floor.
   3. Exposed and Not Subject to Physical Damage: Corrosion-resistant EMT.
   4. Concealed Aboveground: EMT.
   5. Direct Buried: PVC-40.
   6. Concrete Encased Not in Trench: PVC-40.
   7. Concrete Encased in Trench: PVC-40.
   8. Connection to Vibrating Equipment (Including Transformers and Hydraulic, Pneumatic, Electric Solenoid, or Motor-Driven Equipment): LFMC.

C. Indoors:
   1. Hazardous Classified Locations: ERMC.
   2. Exposed and Subject to Severe Physical Damage: ERMC. Subject to severe physical damage includes the following locations:
      a. Loading docks.
      b. Corridors used for traffic of mechanized carts, forklifts, and pallet-handling units.
      c. Mechanical rooms.
      d. Gymnasiums.
   3. Exposed and Subject to Physical Damage: ERMC. Subject to physical damage includes the following locations:
      a. Locations less than 2.5 m (8 ft) above finished floor.
      b. Stub-ups to above suspended ceilings.
   4. Exposed and Not Subject to Physical Damage: EMT.
   5. Concealed in Ceilings and Interior Walls and Partitions: EMT.
   6. Damp or Wet Locations: ERMC.
   7. Connection to Vibrating Equipment (Including Transformers and Hydraulic, Pneumatic, Electric Solenoid, or Motor-Driven Equipment): LFMC.

D. Raceway Fittings: Select fittings in accordance with NEMA FB 2.10 guidelines.
   1. ERMC and IMC: Provide threaded type fittings unless otherwise indicated.

3.2 SELECTION OF BOXES AND ENCLOSURES

A. Unless more stringent requirements are specified in Contract Documents or manufacturers' written instructions, comply with NFPA 70 for selection of boxes and enclosures. Consult Architect for resolution of conflicting requirements.

B. Degree of Protection:
   1. Outdoors:
      a. Type 3R Stainless unless otherwise indicated.
      b. Locations Exposed to Hosedown: Type 4X
      c. Locations Subject to Potential Flooding: Type 6P.
      d. Locations Aboveground Where Mechanism Must Operate When Ice Covered: Type 3S.
      e. Locations in-Ground or Exposed to Corrosive Agents: Type 4X.
      f. Locations in-Ground or Exposed to Corrosive Agents Where Mechanism Must Operate When Ice Covered: Type 3SX.
   2. Indoors:
      a. Type 1 unless otherwise indicated.
      b. Damp or Dusty Locations: Type 12.
      c. Locations Exposed to Airborne Dust, Lint, Fibers, or Flyings: Type 4X.
      d. Locations Exposed to Hosedown: Type 4X.
      e. Locations Exposed to Corrosive Agents: Type 4X.

f. Locations Exposed to Spraying Oil or Coolants: Type 13.

C. Exposed Boxes Installed Less Than 2.5 m (8 ft) Above Floor:

1. Provide cast-metal boxes.
2. Provide exposed cover. Flat covers with angled mounting slots or knockouts are prohibited.

3.3 INSTALLATION OF RACEWAYS

A. Installation Standards:

1. Unless more stringent requirements are specified in Contract Documents or manufacturers' written instructions, comply with NFPA 70 for installation of raceways. Consult Architect for resolution of conflicting requirements.
2. Comply with NFPA 70 limitations for types of raceways allowed in specific occupancies and number of floors.
3. Comply with requirements in Section 260529 "Hangers and Supports for Electrical Systems" for hangers and supports.
4. Comply with NECA NEIS 101 for installation of steel raceways.
5. Comply with NECA NEIS 102 for installation of aluminum raceways.
6. Comply with NECA NEIS 111 for installation of nonmetallic raceways.
7. Install raceways square to the enclosure and terminate at enclosures without hubs with locknuts on both sides of enclosure wall. Install locknuts hand tight, plus one-quarter turn more.
8. Terminate threaded conduits into threaded hubs or with locknuts on inside and outside of boxes or cabinets. Install bushings on conduits up to metric designator 35 (trade size 1-1/4) and insulated throat metal bushings on metric designator 41 (trade size 1-1/2) and larger conduits terminated with locknuts. Install insulated throat metal grounding bushings on service conduits.
9. Raceway Terminations at Locations Subject to Moisture or Vibration:
   a. Provide insulating bushings to protect conductors, including conductors smaller than No. 4 AWG. Install insulated throat metal grounding bushings on service conduits.

B. General Requirements for Installation of Raceways:

1. Complete raceway installation before starting conductor installation.
2. Provide stub-ups through floors with coupling threaded inside for plugs, set flush with finished floor. Plug coupling until conduit is extended above floor to final destination or a minimum of 2 ft (0.6 m) above finished floor.
3. Install no more than equivalent of three 90-degree bends in conduit run except for control wiring conduits, for which no more than equivalent of two 90-degree fewer bends are permitted. Support within 12 inch of changes in direction.
4. Make bends in raceway using large-radius preformed ells except for parallel bends. Field bending must be in accordance with NFPA 70 minimum radii requirements. Provide only equipment specifically designed for material and size involved.
5. Conceal conduit within finished walls, ceilings, and floors unless otherwise indicated. Install conduits parallel or perpendicular to building lines.
6. Support conduit within 12 inch of enclosures to which attached.
7. Install raceway sealing fittings at accessible locations in accordance with NFPA 70 and fill them with listed sealing compound. For concealed raceways, install fitting in flush steel box with blank cover plate having finish similar to that of adjacent plates or surfaces. Install raceway sealing fittings in accordance with NFPA 70.
8. Install devices to seal raceway interiors at accessible locations. Locate seals so no fittings or boxes are between the seal and the following changes of environments. Seal interior of raceways at the following points:
   a. Where conduits pass from warm to cold locations, such as boundaries of refrigerated spaces.
   b. Where an underground service raceway enters a building or structure.
   c. Conduit extending from interior to exterior of building.
   d. Conduit extending into pressurized duct and equipment.
   e. Conduit extending into pressurized zones that are automatically controlled to maintain different pressure set points.
   f. Where otherwise required by NFPA 70.
9. Do not install raceways or electrical items on "explosion-relief" walls or rotating equipment.

10. Do not install conduits within 2 inch of the bottom side of a metal deck roof.
11. Keep raceways at least 6 inch away from parallel runs of flues and steam or hot-water pipes. Install horizontal raceway runs above water and steam piping.
12. Cut conduit perpendicular to the length. For conduits metric designator 53 (trade size 2) and larger, use roll cutter or a guide to make cut straight and perpendicular to the length. Ream inside of conduit to remove burrs.
13. Install pull wires in empty raceways. Provide polypropylene or monofilament plastic line with not less than 200 lb (90 kg) tensile strength. Leave at least 12 inch of slack at both ends of pull wire. Cap underground raceways designated as spare above grade alongside raceways in use.

C. Requirements for Installation of Specific Raceway Types:
1. Types ERMC and IMC:
a. Threaded Conduit Joints, Exposed to Wet, Damp, Corrosive, or Outdoor Conditions: Apply listed compound that maintains electrical conductivity to threads of raceway and fittings before making up joints. Follow compound manufacturer's written instructions.
2. Type ERMC-S-PVC:
a. Follow manufacturer's installation instructions for clamping, cutting, threading, bending, and assembly.
b. Provide PVC-coated sealing locknut for exposed male threads transitioning into female NPT threads that do not have sealing sleeves, including transitions from PVC couplings/female adapters to Type ERMC-S-PVC elbows in direct-burial applications. PVC-coated sealing locknuts must not be used in place of conduit hub. PVC-coated sealing locknut must cover exposed threads on Type ERMC-S-PVC raceway.
c. Coat field-cut threads on PVC-coated raceway with manufacturer-approved corrosion-preventing conductive compound prior to assembly.
3. Types FMC and LFMC:
a. Comply with NEMA RV 3. Provide a maximum of 36 inch of flexible conduit for recessed and semirecessed luminaires, equipment subject to vibration, noise transmission, or movement; and for transformers and motors.
4. Type PVC:
a. Do not install Type PVC conduit where ambient temperature exceeds 122 deg F (50 deg C). Conductor ratings must be limited to 75 deg C except where installed in a trench outside buildings with concrete encasement, where 90 deg C conductors are permitted.
b. Comply with manufacturer's written instructions for solvent welding and fittings.

D. Raceways Embedded in Slabs:
1. Run raceways larger than metric designator 27 (trade size 1) below concrete slab.
2. Arrange raceways to cross building expansion joints with expansion fittings at right angles to the joint.
3. Arrange raceways to ensure that each is surrounded by a minimum of 1 inch of concrete without voids.
4. Do not embed threadless fittings in concrete unless locations have been specifically approved by Architect.

E. Stub-ups to Above Recessed Ceilings:
1. Provide EMT, IMC, or ERMC for raceways.
2. Provide a conduit bushing or insulated fitting to terminate stub-ups not terminated in hubs or in an enclosure.

F. Raceway Fittings: Install fittings in accordance with NEMA FB 2.10 guidelines.
1. ERMC-S-PVC: Provide only fittings listed for use with this type of conduit. Patch and seal joints, nicks, and scrapes in PVC coating after installing conduits and fittings. Provide sealant recommended by fitting manufacturer and apply in thickness and number of coats recommended by manufacturer.
2. EMT: Provide compression fittings. Comply with NEMA FB 2.10.
3. Flexible Conduit: Provide only fittings listed for use with flexible conduit type. Comply with NEMA FB 2.20.

G. Expansion-Joint Fittings:
1. Install in runs of aboveground PVC that are located where environmental temperature change may exceed 30 deg F (17 deg C) and that have straight-run length that exceeds 25 ft (7.6 m). Install in runs of aboveground ERMC and EMT conduit that are located where environmental temperature

change may exceed 100 deg F (55 deg C) and that have straight-run length that exceeds 100 ft (30 m).

2. Install type and quantity of fittings that accommodate temperature change listed for the following locations:
   a. Outdoor Locations Not Exposed to Direct Sunlight: 125 deg F (70 deg C) temperature change.
   b. Outdoor Locations Exposed to Direct Sunlight: 155 deg F (86 deg C) temperature change.
   c. Indoor Spaces Connected with Outdoors without Physical Separation: 125 deg F (70 deg C) temperature change.
3. Install fitting(s) that provide expansion and contraction for at least 0.00041 inch per foot of length of straight run per deg F (0.06 mm per meter of length of straight run per deg C) of temperature change for PVC conduits. Install fitting(s) that provide expansion and contraction for at least 0.000078 inch per foot of length of straight run per deg F (0.0115 mm per meter of length of straight run per deg C) of temperature change for metal conduits.
4. Install expansion fittings at locations where conduits cross building or structure expansion joints.
5. Install expansion-joint fitting with position, mounting, and piston setting selected in accordance with manufacturer's written instructions for conditions at specific location at time of installation. Install conduit supports to allow for expansion movement.

H. Raceways Penetrating Rooms or Walls with Acoustical Requirements:
   1. Seal raceway openings on both sides of rooms or walls with acoustically rated putty or firestopping.

3.4 INSTALLATION OF SURFACE RACEWAYS

A. Install surface raceways only where indicated on Drawings.
B. Install surface raceway with a minimum 2 inch radius control at bend points.
C. Secure surface raceway with screws or other anchor-type devices at intervals not exceeding 48 inch mm) and with no less than two supports per straight raceway section. Support surface raceway in accordance with manufacturer's written instructions. Tape and glue are unacceptable support methods.

3.5 INSTALLATION OF BOXES AND ENCLOSURES

A. Provide boxes in wiring and raceway systems wherever required for pulling of wires, making connections, and mounting of devices or fixtures.
B. Mount boxes at heights indicated on Drawings. If mounting heights of boxes are not individually indicated, give priority to ADA requirements. Install boxes with height measured to top of box unless otherwise indicated.
C. Recessed Boxes in Masonry Walls: Saw-cut opening for box in center of cell of masonry block, and install box flush with surface of wall. Prepare block surfaces to provide a flat surface for a raintight connection between box and cover plate or supported equipment and box, whether installed indoors or outdoors.
D. Horizontally separate boxes mounted on opposite sides of walls so they are not in the same vertical channel.
E. Locate boxes so that cover or plate will not span different building finishes.
F. Support boxes in recessed ceilings independent of ceiling tiles and ceiling grid.
G. Support boxes of three gangs or more from more than one side by spanning two framing members or mounting on brackets specifically designed for purpose.
H. Fasten junction and pull boxes to, or support from, building structure. Do not support boxes by conduits.
I. Set metal floor boxes level and flush with finished floor surface.
J. Set nonmetallic floor boxes level. Trim after installation to fit flush with finished floor surface.
K. Do not install aluminum boxes, enclosures, or fittings in contact with concrete or earth.
L. Do not rely on locknuts to penetrate nonconductive coatings on enclosures. Remove coatings in the locknut area prior to assembling conduit to enclosure to ensure a continuous ground path.
M. Boxes and Enclosures in Areas or Walls with Acoustical Requirements:
   1. Seal openings and knockouts in back and sides of boxes and enclosures with acoustically rated putty.
   2. Provide gaskets for wallplates and covers.

3.6 FIRESTOPPING

A. Install firestopping at penetrations of fire-rated floor and wall assemblies. Comply with requirements in Section 078413 "Penetration Firestopping."

3.7 PROTECTION

A. Protect coatings, finishes, and cabinets from damage and deterioration.
   1. Repair damage to galvanized finishes with zinc-rich paint recommended by manufacturer.
   2. Repair damage to PVC coatings or paint finishes with matching touchup coating recommended by manufacturer.

3.8 CLEANING

A. Boxes: Remove construction dust and debris from device boxes, outlet boxes, and floor-mounted enclosures before installing wallplates, covers, and hoods.

END OF SECTION

SECTION 260536 - CABLE TRAYS FOR ELECTRICAL SYSTEMS

PART 1 GENERAL

1.1 SUMMARY

A. Section Includes:
   1. Metal cable trays.
   2. Nonmetallic cable trays.
   3. Cable tray accessories.
B. Related Requirements:
   1. Section 260010 "Supplemental Requirements for Electrical" for additional abbreviations, definitions, submittals, qualifications, testing agencies, and other Project requirements applicable to Work specified in this Section.
   2. Section 260011 "Facility Performance Requirements for Electrical" for seismic-load, wind-load, acoustical, and other field conditions applicable to Work specified in this Section.
C. Products Installed, but Not Furnished, under This Section:
   1. Section 078413 "Penetration Firestopping" specifies firestopping products installed under this Section.
   2. Section 260526 "Grounding and Bonding for Electrical Systems" specifies grounding and bonding products installed under this Section.
   3. Section 260553 "Identification for Electrical Systems" specifies electrical equipment labels and warning signs installed by this Section.

1.2 ACTION SUBMITTALS

A. Product data.
B. Shop Drawings:
   1. Cable tray fabrication drawings, diagrams, and supporting documents.
C. Field quality-control reports.

1.3 INFORMATIONAL SUBMITTALS

A. Manufacturers' published instructions.
B. Field Reports:
   1. Factory test reports.
   2. Manufacturer's field reports for field quality-control support.

PART 2 PRODUCTS

2.1 METAL CABLE TRAYS

A. Description: This product category covers metal cable trays and metal cable tray systems intended for field assembly and for use in accordance with Article 392 of NFPA 70.
B. Performance Criteria:
   1. Regulatory Requirements:
      a. Listed and labeled in accordance with NFPA 70, by qualified electrical testing laboratory recognized by authorities having jurisdiction, and marked for intended location and application.
   2. Listing Criteria: UL CCN CYNW; including NEMA VE 1 and suitability for use as equipment grounding conductors in accordance with Sections 392.60(A) and 392.60(B) of NFPA 70.
C. UL CYNW - Ladder Cable Tray (Inside Telecom Rooms):
   1. General Characteristics:

a. Configuration: Two longitudinal side rails with transverse rungs swaged or welded to side rails, complying with NEMA VE 1.
b. Radius-Fitting Rung Spacing: 9 inch at center of tray's width.
c. Minimum Cable-Bearing Surface for Rungs: 7/8 inch width with radius edges.
d. No portion of the rungs must protrude below the bottom plane of side rails.
e. Structural Performance of Each Rung: Capable of supporting a maximum cable load, with a safety factor of 1.5, plus a 200 lb. (90 kg) concentrated load, when tested in accordance with NEMA VE 1.
f. Splicing Assemblies: Bolted type using serrated flange locknuts.
g. Splice-Plate Capacity: Splices located within support span must not diminish rated loading capacity of cable tray.

2. Materials and Finishes (Steel):
   a. Straight Section and Fitting Side Rails and Rungs: Steel complies with the minimum mechanical properties of ASTM A1011/A1011M, SS, Grade 33
   b. Steel Tray Splice Plates: ASTM A1011/A1011M, HSLAS, Grade 50, Class 1.
   c. Fasteners: Steel complies with the minimum mechanical properties of ASTM A510/A510M, Grade 1008.
   d. Finish:
      1) Hot-dip galvanized after fabrication, complying with ASTM A123/A123M, Class B2, with galvanized, ASTM B633 hardware.
      2) Powder-coat enamel paint, with stainless steel, Type 316, ASTM F593 and ASTM F594 hardware.
         (a) Powder-Coat Enamel: Cable tray manufacturer's recommended primer and corrosion-inhibiting treatment, with factory-applied powder-coat paint.
         (b) Epoxy-Resin Prime Coat: Cold-curing epoxy primer, MPI# 101.
         (c) Epoxy-Resin Topcoat: Epoxy, cold-cured gloss, MPI# 77.
      3) Factory-standard primer, ready for field painting, with chromium-zinc-plated hardware in accordance with ASTM F1136.
      4) Black oxide finish for support accessories and miscellaneous hardware in accordance with ASTM D769.
      5) ???Insert finish???.
3. Materials and Finishes (Aluminum):
   a. Materials: Alloy 6063-T6 in accordance with ANSI H35.1/H35.1M for extruded components, and Alloy 5052-H32 or Alloy 6061-T6 in accordance with ANSI H35.1/H35.1M for fabricated parts.
   b. Hardware: Stainless steel, Type 316, ASTM F593 and ASTM F594.
   c. Hardware for Aluminum Cable Tray Used Outdoors: Stainless steel, Type 316, ASTM F593 and ASTM F594.
4. Materials and Finishes (Stainless Steel):
   a. Materials: Low-carbon, passivated stainless steel, Type 316L, ASTM F593 and ASTM F594.
   b. Hardware for Stainless Steel Cable Tray Used Outdoors: Stainless steel, Type 316, ASTM F593 and ASTM F594.
5. Options:
   a. Width: 18 inch unless otherwise indicated on Drawings.
   b. Minimum Usable Load Depth: 4 inch.
   c. Straight Section Lengths: 10 ft (3.0 m), except where shorter lengths are required to facilitate tray assembly.
   d. Rung Spacing: 6 inch on center.
   e. Fitting Minimum Radius:12 inch.
   f. Class Designation: Comply with NEMA VE 1, Class 5AA.

D. UL CYNW - Wire-Mesh Cable Tray (Outside Telecom Rooms):
1. General Characteristics:
   a. Configuration: Galvanized-steel wire mesh, complying with NEMA VE 1.
   b. Structural Performance: Capable of supporting a maximum cable load, with a safety factor of 1.5, plus a 200 lb. (90 kg) concentrated load, when tested in accordance with NEMA VE 1.

c. Splicing Assemblies: Bolted type using serrated flange locknuts.
d. Splice-Plate Capacity: Splices located within support span must not diminish rated loading capacity of cable tray.

2. Materials and Finishes (Steel):
   a. Straight Sections and Fittings: Steel complies with the minimum mechanical properties of ASTM A1011/A1011M, SS, Grade 33.
   b. Steel Tray Splice Plates: ASTM A1011/A1011M, HSLAS, Grade 50, Class 1.
   c. Fasteners: Steel complies with the minimum mechanical properties of ASTM A510/A510M, Grade 1008.
   d. Finish:
      1) Hot-dip galvanized after fabrication, complying with ASTM A123/A123M, Class B2, with stainless steel, Type 316 hardware.
      2) Hot-dip galvanized after fabrication, complying with ASTM A653/A653M, G90 (Z275), with galvanized, ASTM B633 hardware.
      3) Electrogalvanized after fabrication, complying with ASTM B633, with galvanized, ASTM B633 hardware.
      4) Powder-coat enamel paint, with stainless steel, Type 316, ASTM F593 and ASTM F594 hardware.
         (a) Powder-Coat Enamel: Cable tray manufacturer's recommended primer and corrosion-inhibiting treatment, with factory-applied powder-coat paint.
         (b) Epoxy-Resin Prime Coat: Cold-curing epoxy primer, MPI# 101.
         (c) Epoxy-Resin Topcoat: Epoxy, cold-cured gloss, MPI# 77.
      5) Factory-standard primer, ready for field painting, with chromium-zinc-plated hardware in accordance with ASTM F1136.
      6) Black oxide finish for support accessories and miscellaneous hardware in accordance with ASTM D769.
3. Options:
   a. Width: 18 inch unless otherwise indicated on Drawings.
   b. Minimum Usable Load Depth: 4 inch.
   c. Straight Section Lengths: 10 ft (3.0 m), except where shorter lengths are required to facilitate tray assembly.
   d. Class Designation: Comply with NEMA VE 1, Class 5AA.

2.2 CABLE TRAY ACCESSORIES

A. Fittings: Tees, crosses, risers, elbows, and other fittings as indicated, of same materials and finishes as cable tray.
B. Barrier Strips: Same materials and finishes as for cable tray.
C. Cable tray supports and connectors, including bonding jumpers, as recommended by cable tray manufacturer.

2.3 SOURCE QUALITY CONTROL

A. Product Data: Prepare and submit catalog cuts, brochures, diagrams, schedules, and performance data illustrating size, physical appearance, and other characteristics of product.
   1. Include data indicating dimensions and finishes for each type of cable tray indicated.
B. Manufacturer's Published Instructions: Prepare and submit installation, testing, and operating instructions for product.
C. Factory Tests:
   1. Factory Tests and Inspections: Perform the following tests and inspections on cable trays, by, or under supervision of, qualified electrical testing laboratory recognized by authorities having jurisdiction before delivering to site. Affix label with name and date of manufacturer's certification of system compliance.
      a. Test and inspect cable trays in accordance with NEMA FG 1.
   2. Nonconforming Work:
      a. Equipment that does not pass tests and inspections will be considered defective.
   3. Factory Test Reports: Prepare and submit factory test and inspection reports.

PART 3 EXECUTION

3.1 PREPARATION

A. Shop Drawings: Prepare and submit the following for each cable tray system:
   1. Cable Tray Fabrication Drawings, Diagrams, and Supporting Documents:
      a. Show fabrication and installation details of cable trays, including plans, elevations, and sections of components and attachments to other construction elements. Designate components and accessories, including clamps, brackets, hanger rods, splice-plate connectors, expansion-joint assemblies, straight lengths, and fittings.
      b. Include load calculations to show that dead and live loads do not exceed manufacturer's rating for tray and its support elements.
      c. Cable tray layout, showing cable tray route to scale, with relationship between the tray and adjacent structural, electrical, and mechanical elements. Include the following:
         1) Vertical and horizontal offsets and transitions.
         2) Clearances for access above and to sides of cable trays.
         3) Vertical elevation of cable trays above the floor or bottom of ceiling structure.

3.2 INSTALLATION OF CABLE TRAYS

A. Install cable tray and support systems in accordance with NEMA FG 1.
B. Install cable tray as a complete system, including fasteners, hold-down clips, support systems, barrier strips, adjustable horizontal and vertical splice plates, elbows, reducers, tees, crosses, cable dropouts, adapters, covers, and bonding.
C. Install cable tray, so that the tray is accessible for cable installation and all splices are accessible for inspection and adjustment.
D. Remove burrs and sharp edges from cable trays.
E. Fasten cable tray supports to building structure and install seismic restraints.
F. Design fasteners and supports to carry cable tray, cables, and a concentrated load of 200 lb (90 kg). Comply with requirements in Section 260529 "Hangers and Supports for Electrical Systems." Comply with seismic-restraint details in accordance with Section 260548.16 "Seismic Controls for Electrical Systems."
G. Place supports, so that spans do not exceed maximum spans on schedules, and provide clearances shown on Drawings. Install intermediate supports when cable weight exceeds the load-carrying capacity of tray rungs.
H. Construct supports from channel members, threaded rods, and other appurtenances furnished by cable tray manufacturer. Arrange supports in trapeze or wall-bracket form as required by application.
I. Support assembly to prevent twisting from eccentric loading.
J. Install center-hung supports for single-rail trays designed for 60 versus 40 percent eccentric loading condition, with a safety factor of 3.
K. Do not install more than one cable tray splice between supports.
L. Support wire-basket cable trays with trapeze hangers or wall brackets.
M. Install expansion connectors where cable trays cross building expansion joints and in cable tray runs that exceed recommended dimensions. Space connectors and set gaps in accordance with applicable standard.
N. Make changes in direction and elevation using manufacturer's recommended fittings.
O. Make cable tray connections using manufacturer's recommended fittings.
P. Seal penetrations through fire and smoke barriers.
Q. Install capped metal sleeves for future cables through firestop-sealed cable tray penetrations of fire and smoke barriers.
R. Install cable trays with enough workspace to permit access for installing cables.
S. Install barriers to separate cables of different systems, such as power, communications, and data processing, or of different insulation levels, such as 600, 5000, and 15 000 V.
T. Install permanent covers and cover clamps, if used, after installing cable.
U. Clamp covers on cable trays installed outdoors with heavy-duty clamps.
V. Install warning signs in visible locations on or near cable trays after cable tray installation.

3.3 CABLE TRAY GROUNDING

A. Ground cable trays in accordance with NFPA 70 unless additional grounding is specified.

B. Cable trays with electrical power conductors must be bonded together with splice plates listed for grounding purposes or with listed bonding jumpers.

C. Cable trays with single-conductor power conductors must be bonded together with a grounding conductor run in the tray along with the power conductors and bonded to the tray at 72 inch intervals. The grounding conductor must be sized in accordance with Article 250 and Article 392 of NFPA 70.

D. When using epoxy- or powder-coat painted cable trays as a grounding conductor, completely remove coating at all splice contact points or ground connector attachment. After completing splice-to-grounding-bolt attachment, repair the coated surfaces with coating materials recommended by cable tray manufacturer.

E. Bond cable trays to power source for cables contained within with bonding conductors sized in accordance with Article 250 of NFPA 70.

3.4 INSTALLATION OF CABLES

A. Install cables only when each cable tray run has been completed and inspected.

B. Fasten cables on horizontal runs with cable clamps or cable ties. Tighten clamps only enough to secure the cable, without indenting the cable jacket. Install cable ties with a tool that includes an automatic pressure-limiting device.

C. Fasten cables on vertical runs to cable trays every 18 inch.

D. Fasten and support cables that pass from one cable tray to another or drop from cable trays to equipment enclosures. Fasten cables to the cable tray at the point of exit and support cables independent of the enclosure. The cable length between cable trays or between cable tray and enclosure must be no more than 72 inch.

E. Tie mineral-insulated cables down every 36 inch where required to provide a two-hour fire rating and every 72 inch elsewhere.

F. In existing construction, remove inactive or dead cables from cable trays.

3.5 FABRICATION OF CONNECTION POINTS

A. Remove paint from all connection points before making connections. Repair paint after the connections are completed.

B. Connect raceways to cable trays in accordance with requirements in NEMA VE 2 and NEMA FG 1.

3.6 INSTALLATION OF CABLE TRAY MARKINGS AND SIGNS

A. Trays Containing Cables Operating Over 600 V: Provide hazard markings in accordance with Section 392.18 of NFPA 70 and with NEMA Z535.4.

   1. Legend: "DANGER - HIGH VOLTAGE - KEEP AWAY."

B. Ladder Cable Trays: Provide warning signs to prevent use as personnel ladder.

   1. Lettering: 1-1/2 inch high.
   2. Legend: "WARNING! NOT TO BE USED AS WALKWAY, LADDER, OR SUPPORT FOR LADDERS OR PERSONNEL."

3.7 FIELD QUALITY CONTROL

A. Field tests and inspections must be witnessed by authorities having jurisdiction.

B. Tests and Inspections:

   1. After installing cable trays and after electrical circuitry has been energized, survey for compliance with requirements.
   2. Visually inspect cable insulation for damage. Correct sharp corners, protuberances in cable trays, vibrations, and thermal expansion and contraction conditions, which may cause or have caused damage.
   3. Verify that the number, size, and voltage of cables in cable trays do not exceed that permitted by NFPA 70. Verify that communications or data-processing circuits are separated from power circuits by barriers or are installed in separate cable trays.

4. Verify that there are no intruding items, such as pipes, hangers, or other equipment, in the cable tray.
5. Remove dust deposits, industrial process materials, trash of any description, and any blockage of tray ventilation.
6. Visually inspect each cable tray joint and each ground connection for mechanical continuity. Check bolted connections between sections for corrosion. Clean and retorque in suspect areas.
7. Check for improperly sized or installed bonding jumpers.
8. Check for missing, incorrect, or damaged bolts, bolt heads, or nuts. When found, replace with specified hardware.
9. Perform visual and mechanical checks for adequacy of cable tray grounding; verify that all takeoff raceways are bonded to cable trays. Test entire cable tray system for continuity. Maximum allowable resistance is 1 Ω.

C. Nonconforming Work:
1. Cable tray will be considered defective if it does not pass tests and inspections.
2. Remove and replace defective units and retest.

D. Field Quality-Control Reports: Collect, assemble, and submit test and inspection reports.

E. Manufacturer Services: Engage factory-authorized service representative to support field tests and inspections.
1. Manufacturer's Field Reports for Field Quality-Control Support: Prepare and submit report after each visit by factory-authorized service representative, documenting activities performed at Project site.

3.8 PROTECTION

A. Protect installed cable trays and cables.
1. Install temporary protection for cables in open trays to safeguard exposed cables against falling objects or debris during construction. Temporary protection for cables and cable tray can be constructed of wood or metal materials and must remain in place until the risk of damage is over.
2. Repair damage to galvanized finishes with zinc-rich paint recommended by cable tray manufacturer.
3. Repair damage to paint finishes with matching touchup coating recommended by cable tray manufacturer.

END OF SECTION

SECTION 260543 - UNDERGROUND DUCTS AND RACEWAYS FOR ELECTRICAL SYSTEMS

PART 1 GENERAL

1.1 SUMMARY

A. Section Includes:
1. Type EPEC raceways and fittings.
2. Type ERMC-SS raceways, elbows, couplings, and nipples.
3. Type ERMC-S raceways, elbows, couplings, and nipples.
4. Type IMC raceways.
5. Type PVC raceways and fittings.
6. Type RTRC-BG raceways and fittings.
7. Fittings for conduit, tubing, and cable.
8. Electrically conductive corrosion-resistant compounds for threaded conduit.
9. Solvent cements.
10. Duct accessories.
11. Handholes and boxes for exterior underground wiring.
12. Manholes for exterior underground wiring.
13. Utility structure accessories.
14. Duct sealing.

B. Related Requirements:
1. Section 260010 "Supplemental Requirements for Electrical" specifies additional abbreviations, definitions, submittals, qualifications, testing agencies, and other Project requirements applicable to Work specified in this Section.
2. Section 260011 "Facility Performance Requirements for Electrical" specifies seismic-load, wind-load, acoustical, and other field conditions applicable to Work specified in this Section.
3. Section 260519 "Low-Voltage for Electrical Power Conductors and Cables" specifies nonmetallic underground conduit with conductors (Type NUCC).
4. Section 260553 "Identification for Electrical Systems" specifies underground-line warning tape and concrete cable routing markers (warning planks).

1.2 PREINSTALLATION MEETINGS

A. Preinstallation Conference: Conduct conference at Project site.

B. Preinstallation Coordination Meeting(s): For underground ducts and raceways. Conduct meeting(s) as videoconference or at Project site before excavation.

1.3 ACTION SUBMITTALS

A. Product Data: For each type of product.
1. For concrete and steel used in precast concrete manholes and handholes, also include product certificates as required by ASTM C858.

B. Shop Drawings:
1. Electric Utility Duct Banks and Structures:
a. Include plans, elevations, sections, and details, including attachments to other Work.
b. Indicate locations of private property boundaries and utility easements.
c. Include information required for approval by electric utility and for obtaining public space utility work permits.
2. Precast or Factory-Fabricated Concrete Structures:
a. Include plans, elevations, sections, and details, including attachments to other Work.
b. Include duct entry provisions, including locations and duct sizes, and methods and materials for waterproofing duct entry locations.

c. Include reinforcement details.
d. Include frame and cover design and manhole chimneys.
e. Include ladder details.
f. Include grounding details.
g. Include dimensioned locations of cable rack inserts, pulling-in and lifting irons, sumps, and other accessories.
h. Include joint details.

3. Factory-Fabricated Handholes and Boxes Other Than Precast Concrete:
   a. Include dimensioned plans, sections, and elevations, and fabrication and installation details.
   b. Include duct entry provisions, including locations and duct sizes, and methods and materials for waterproofing duct entry locations.
   c. Include cover design.
   d. Include grounding details.
   e. Include dimensioned locations of cable rack inserts, pulling-in and lifting irons, and other accessories.

C. Field Quality-Control Submittals:
   1. Field quality-control reports.

1.4 INFORMATIONAL SUBMITTALS

A. Certificates:
   1. For concrete and steel used in precast concrete manholes and handholes, as required by ASTM C858.

B. Manufacturers' Published Instructions: Prepare and submit installation, testing, and operating instructions for product.

C. Source Quality-Control Submittals:
   1. Source quality-control reports.

1.5 REGULATORY AGENCY APPROVALS

A. Shop Drawing submittals for electric utility duct banks and structures must be signed and sealed by qualified electrical professional engineer responsible for their preparation. Obtain approval by electric utility prior to submitting for action by Architect

B. Submit Shop Drawings for electric utility duct banks and structures for action by Architect prior to submitting for approval by electric utility.

PART 2 PRODUCTS

2.1 TYPE EPEC RACEWAYS AND FITTINGS

A. Performance Criteria:
   1. Regulatory Requirements: Listed and labeled in accordance with NFPA 70 and marked for intended location and use.
   2. General Characteristics: UL 651A and UL CCN EAZX.

B. Schedule 40 Electrical HDPE Underground Conduit (EPEC-40):
   1. Dimensional Specifications: Schedule 40.
   2. Options:
      a. Minimum Trade Size: Metric designator 16 (trade size 1/2).

C. Schedule 80 Electrical HDPE Underground Conduit (EPEC-80):
   1. Dimensional Specifications: Schedule 80.
   2. Options:
      a. Minimum Trade Size: Metric designator 16 (trade size 1/2)

2.2 TYPE PVC RACEWAYS AND FITTINGS

A. Performance Criteria:
1. Regulatory Requirements: Listed and labeled in accordance with NFPA 70 and marked for intended location and use.
2. General Characteristics: UL 651 and UL CCN DZYR.

B. Schedule 40 Rigid PVC Conduit (PVC-40) and Fittings:
1. Dimensional Specifications: Schedule 40.
2. Options:
a. Minimum Trade Size: Metric designator 16 (trade size 1/2)
b. Markings: For use with maximum 90 deg C wire.

C. Schedule 80 Rigid PVC Conduit (PVC-80) and Fittings:
1. Dimensional Specifications: Schedule 80.
2. Options:
a. Minimum Trade Size: Metric designator 16 (trade size 1/2)
b. Markings: For use with maximum 90 deg C wire.

2.3 FITTINGS FOR CONDUIT, TUBING, AND CABLE

A. Performance Criteria:
1. Regulatory Requirements: Listed and labeled in accordance with NFPA 70 and marked for intended location and use.

B. Metallic Fittings for Type ERMC, Type IMC, Type PVC, Type EPEC, and Type RTRC Raceways:
1. General Characteristics: UL 514B and UL CCN DWTT.
2. Options:
a. Material: Steel.
b. Coupling Method: Compression coupling.
c. Conduit Fittings for Hazardous (Classified) Locations: UL 1203.
d. Expansion and Deflection Fittings: UL 651 with flexible external bonding jumper.

2.4 ELECTRICALLY CONDUCTIVE CORROSION-RESISTANT COMPOUNDS FOR THREADED CONDUIT

A. Performance Criteria:
1. Regulatory Requirements: Listed and labeled in accordance with NFPA 70 and marked for intended location and use.
2. General Characteristics: UL Subject 2419 and UL CCN FOIZ.

2.5 SOLVENT CEMENTS

A. Performance Criteria:
1. Regulatory Requirements: Listed and labeled in accordance with NFPA 70 and marked for intended location and use.
2. General Characteristics: As recommended by conduit manufacturer in accordance with UL 514B and UL CCN DWTT.

2.6 DUCT ACCESSORIES

A. Duct Spacers: Factory-fabricated, rigid, PVC interlocking spacers; sized for type and size of duct with which used, and selected to provide minimum duct spacing indicated while supporting duct during concreting or backfilling.

2.7 HANDHOLES AND BOXES FOR EXTERIOR UNDERGROUND WIRING

A. Performance Criteria:
1. Regulatory Requirements: Listed and labeled in accordance with NFPA 70 and marked for intended location and use.

2. General Characteristics:
    a. ASTM C858 for design and manufacturing processes.
    b. SCTE 77.

B. Source Quality Control:
1. Precast Concrete Utility Structures: Test and inspect in accordance with ASTM C1037.
2. Polymer Concrete and Nonconcrete Handhole and Pull-Box Prototypes: Test prototypes of handholes and boxes for compliance with SCTE 77. Strength tests must be for specified tier ratings of products supplied. Testing machine pressure gages must have current calibration certification, complying with ISO 9000 and ISO 10012, and traceable to NIST standards.
    a. Tests of materials must be performed by independent testing agency.
    b. Strength tests of complete boxes and covers must be by independent testing agency or manufacturer. Qualified registered professional engineer must certify tests by manufacturer.

C. Precast Concrete Handholes and Boxes:
1. Description: Factory-fabricated, reinforced-concrete, monolithically poured walls and bottom unless open-bottom enclosures are indicated. Frame and cover must form top of enclosure and must have load rating consistent with that of handhole or box.
2. Configuration: Units must be designed for flush burial and have open bottom unless otherwise indicated.
3. Frame and Cover:
    a. Weatherproof cast-iron frame, with cast-iron cover with recessed cover hook eyes and tamper-resistant, captive, cover-securing bolts.
    b. Weatherproof steel frame, with steel cover with recessed cover hook eyes and tamper-resistant, captive, cover-securing bolts.
    c. Weatherproof steel frame, with concealed-hinge steel access door assembly; tamper-resistant, captive, cover-securing bolts; hold-open ratchet assembly; and recessed cover handle.
    d. Cover Finish: Nonskid finish must have minimum coefficient of friction of 0.50.
    e. Cover Legend: Molded lettering, "ELECTRIC” or “TELECOM”
4. Extensions and Slabs: Designed to mate with bottom of enclosure. Same material as enclosure.
    a. Extension must provide increased depth of 12 inch.
    b. Slab: Same dimensions as bottom of enclosure, and arranged to provide closure.
5. Joint Sealant: Asphaltic-butyl material with adhesion, cohesion, flexibility, and durability properties necessary to withstand maximum hydrostatic pressures at installation location with ground-water level at grade.
6. Knockout Panels: Precast openings in walls, arranged to match dimensions and elevations of approaching duct, plus additional 12 inch vertically and horizontally to accommodate alignment variations.
7. Duct Entrances in Handhole Walls: Cast end-bell or duct-terminating fitting in wall for each entering duct.
8. Handholes 12 inch wide by 24 inch long (300 mm wide by 600 mm long) and larger must have inserts for cable racks and pulling-in irons installed before concrete is poured.

D. Polymer Concrete Handholes and Boxes with Polymer Concrete Cover:
1. Description: Molded of sand, concrete, and aggregate, bound together with polymer resin, and reinforced with steel or fiberglass or combination.
2. Configuration: Units must be designed for flush burial and have open bottom unless otherwise indicated.
3. Cover: Weatherproof, secured by tamper-resistant locking devices and having structural load rating consistent with enclosure and installed location.
    a. Cover Finish: Nonskid finish must have minimum coefficient of friction of 0.50.
    b. Cover Legend: Molded lettering, "ELECTRIC" or “TELECOM”.
4. Conduit Entrance Provisions: Conduit-terminating fittings must mate with entering ducts for secure, fixed installation in enclosure wall.
5. Direct-Buried Wiring Entrance Provisions: Knockouts equipped with insulated bushings or end-bell fittings, selected to suit box material, sized for wiring indicated, and arranged for secure, fixed installation in enclosure wall.

6. Duct Entrance Provisions: Duct-terminating fittings must mate with entering duct for secure, fixed installation in enclosure wall.
7. Handholes 12 inch wide by 24 inch long (300 mm wide by 600 mm long) and larger must have factory-installed inserts for cable racks and pulling-in irons.
8. Options:
    a. Color: Gray.

2.8 MANHOLES FOR EXTERIOR UNDERGROUND WIRING

A. Performance Criteria:
    1. Regulatory Requirements: Listed and labeled in accordance with NFPA 70 and marked for intended location and use.
    2. General Characteristics:
        a. ASTM C858 for design and manufacturing processes.
        b. SCTE 77.
B. Precast Concrete Manholes:
    1. Description: One-piece units and units with interlocking mating sections, complete with accessories, hardware, and features.
    2. Knockout Panels: Precast openings in walls, arranged to match dimensions and elevations of approaching duct, plus additional 12 inch vertically and horizontally to accommodate alignment variations.
    3. Duct Entrances in Manhole Walls: Cast end-bell or duct-terminating fitting in wall for each entering duct.
    4. Ground Rod Sleeve: Provide 3 inch PVC sleeve in manhole floors 2 inch from wall adjacent to, but not underneath, duct entering structure.
    5. Joint Sealant: Asphaltic-butyl material with adhesion, cohesion, flexibility, and durability properties necessary to withstand maximum hydrostatic pressures at installation location with ground-water level at grade.
    6. Source Quality Control: Test and inspect in accordance with ASTM C1037.
C. Cast-in-Place Concrete Manholes:
    1. Description: Underground utility structures, constructed in place, complete with accessories, hardware, and features. Include concrete knockout panels for duct entrance and sleeve for ground rod.
    2. Additional Criteria: Comply with Section 033000 "Cast-in-Place Concrete."

2.9 UTILITY STRUCTURE ACCESSORIES

A. Description: Utility equipment and accessory items used for utility structure access and utility support, listed and labeled for intended use and application
B. Manhole Frames, Covers, and Chimney Components: Comply with structural design loading specified for manhole.
    1. Frame and Cover: Weatherproof, gray cast iron complying with ASTM A48/A48M, Class 30B with milled cover-to-frame bearing surfaces; diameter, 26 inch
        a. Cover Finish: Nonskid finish must have minimum coefficient of friction of 0.50.
        b. Special Covers: Recess in face of cover designed to accept finish material in paved areas.
    2. Cover Legend: Cast in; selected to suit system.
        a. Legend: "ELECTRIC."
    3. Manhole Chimney Components: Precast concrete rings with dimensions matched to those of roof opening.
        a. Mortar for Chimney Ring and Frame and Cover Joints: Comply with ASTM C270, Type M, except for quantities less than 2.0 cu. ft (60 L) where packaged mix complying with ASTM C387/C387M, Type M, may be used.
        b. Seal joints watertight using preformed plastic or rubber complying with ASTM C990. Install sealing material in accordance with sealant manufacturers' published instructions.
C. Manhole Sump Frame and Grate: ASTM A48/A48M, Class 30B, gray cast iron.

D. Pulling Eyes in Concrete Walls: Eyebolt with reinforcing-bar fastening insert, 2 inch diameter eye, and 1-by-4 inch bolt.
   1. Working Load Embedded in 6 inch, 4000 psi Concrete: 13,000 lbf (58 kN) minimum tension.
E. Pulling Eyes in Nonconcrete Walls: Eyebolt with reinforced fastening, 1-1/4 inch diameter eye, rated 2500 lbf (11 kN) minimum tension.
F. Pulling-in and Lifting Irons in Concrete Floors: 7/8 inch diameter, hot-dip galvanized, bent steel rod; stress relieved after forming; fastened to reinforcing rod; and with exposed triangular opening.
   1. Ultimate Yield Strength: 40,000 lbf (180 kN) shear and 60,000 lbf (270 kN) tension.
G. Bolting Inserts for Concrete Utility Structure Cable Racks and Other Attachments: Flared, threaded inserts of noncorrosive, chemical-resistant, nonconductive thermoplastic material; 1/2 inch ID by 2-3/4 inch deep, flared to 1-1/4 inch minimum at base.
   1. Tested Ultimate Pullout Strength: 12,000 lbf (53 kN) minimum.
H. Ground Rod Sleeve: 3 inch PVC sleeve in manhole floors 2 inch from wall adjacent to, but not underneath, ducts routed from facility.
I. Steel Cable Rack Assembly: Hot-dip galvanized, except insulators.
   1. Stanchions: T-section or channel with provisions to connect to other sections or channels to form continuous unit; 1-1/2 inch in width by nominal 24 inch long; punched with 14 hook holes on 1-1/2 inch centers for cable-arm attachment.
   2. Arms: 1-1/2 inch wide, lengths ranging from 3 inch with 450 lb (204 kg) minimum capacity to 18 inch with 250 lb (114 kg) minimum capacity. Arms must have slots along full length for cable ties and be arranged for secure mounting in horizontal position at vertical locations on stanchions.
   3. Insulators: High-glaze, wet-process porcelain arranged for mounting on cable arms.
J. Nonmetallic Cable Rack Assembly: Components fabricated from nonconductive, fiberglass-reinforced polymer.
   1. Stanchions: Nominal 36 inch high by 4 inch wide, with provisions to connect to other sections to form continuous unit, with minimum of nine holes for arm attachment.
   2. Arms: Arranged for secure, drop-in attachment in horizontal position at locations on cable stanchions, and capable of being locked in position. Arms must be available in lengths ranging from 3 inch with 450 lb (204 kg) minimum capacity to 20 inch with 250 lb (114 kg) minimum capacity. Top of arm must be nominally 4 inch wide, and arm must have slots along full length for cable ties.
K. Fixed Manhole Ladders: Arranged for attachment to roof or wall and floor of manhole. Ladder and mounting brackets and braces must be fabricated from nonconductive, structural-grade, fiberglass-reinforced resin.
L. Cover Hooks: Heavy duty, designed for lifts 60 lbf (270 N) and greater.

2.10 DUCT SEALING

A. Duct-Sealing Compound: Nonhardening, safe for contact with human skin, not deleterious to cable insulation, and workable at temperatures as low as 35 deg F (2 deg C). Compound must be capable of withstanding temperature of 300 deg F (150 deg C) without slump and adhering to clean surfaces of plastic ducts, metallic conduit, conduit and duct coatings, concrete, masonry, lead, cable sheaths, cable jackets, insulation materials, and common metals. Duct sealing compound must be removable without damaging ducts or cables.
B. Inflatable Duct-Sealing System: Wraparound inflatable bladder that seals ducts that are empty or containing conductors against air and water infiltration. System is suitable for use in steel, plastic, or concrete ducts and penetrations.

PART 3 EXECUTION

3.1 PREPARATION

A. Coordinate layout and installation of duct, duct bank, manholes, handholes, and boxes with final arrangement of other utilities, site grading, and surface features as determined in field. Notify Architect if there is conflict between areas of excavation and existing structures or archaeological sites to remain.
B. Coordinate elevations of duct and duct-bank entrances into manholes, handholes, and boxes with final locations and profiles of duct and duct banks, as determined by coordination with other utilities,

underground obstructions, and surface features. Revise locations and elevations as required to suit field conditions and to ensure that duct and duct bank will drain to manholes and handholes, and as approved by Architect.

3.2 SELECTION OF UNDERGROUND DUCTS

A. Duct for Electrical Feeders: PVC-40, concrete encased unless otherwise indicated.
B. Duct for Electrical Branch Circuits: PVC-40, direct buried unless otherwise indicated.
C. Underground Ducts Crossing Paved Paths, Walks and Driveways: PVC-40 encased in reinforced concrete.
D. Stub-ups: Concrete encased, PVC-40.

3.3 SELECTION OF UNDERGROUND ENCLOSURES

A. Handholes and Boxes:
   1. Units in Roadways and Other Deliberate Traffic Paths: Precast concrete, AASHTO HB 17, H-20 structural load rating.
   2. Units in Driveway, Parking Lot, and Off-Roadway Locations, Subject to Occasional, Nondeliberate Loading by Heavy Vehicles: Precast concrete, AASHTO HB 17, H-20 structural load rating.
   3. Units in Sidewalk and Similar Applications with Safety Factor for Nondeliberate Loading by Vehicles: Precast concrete, AASHTO HB 17, H-10 structural load rating.
   4. Units Subject to Light-Duty Pedestrian Traffic Only: Fiberglass-reinforced polyester resin, structurally tested in accordance with SCTE 77 with 3000 lbf (13 345 N) vertical loading.
   5. Cover design load must not exceed load rating of handhole or box.
B. Manholes: Precast concrete.
   1. Units Located in Roadways and Other Deliberate Traffic Paths by Heavy or Medium Vehicles: H-20 structural load rating in accordance with AASHTO HB 17.
   2. Units Not Located in Deliberate Traffic Paths by Heavy or Medium Vehicles: H-10 load rating in accordance with AASHTO HB 17.

3.4 EARTHWORK

A. Excavation and Backfill: Comply with Section 312000 "Earth Moving," but do not use heavy-duty, hydraulic-operated, compaction equipment.
B. Restoration: Restore area immediately after backfilling is completed
C. Restore surface features at areas disturbed by excavation, and re-establish original grades unless otherwise indicated. Replace removed sod immediately after backfilling is completed.
D. Restore areas disturbed by trenching, storing of dirt, cable laying, and other work. Restore vegetation and include necessary topsoiling, fertilizing, liming, seeding, sodding, sprigging, and mulching. Comply with Section 329200 "Turf and Grasses" and Section 329300 "Plants."
E. Cut and patch existing pavement in path of underground duct, duct bank, and underground structures in accordance with "Cutting and Patching" Article in Section 017300 "Execution."

3.5 INSTALLATION OF DUCTS AND DUCT BANKS

A. Reference Standards:
   1. Unless more stringent requirements are specified in Contract Documents or manufacturers' published instructions, comply with NEMA TCB 2 for installation of underground ducts and duct banks.
   2. Consult Architect for resolution of conflicting requirements.
B. Special Techniques:
   1. Where indicated on Drawings, install duct, spacers, and accessories into duct-bank configuration shown. Duct installation requirements in this Section also apply to duct bank.
   2. Steel raceway, bends, and fittings in single duct run or duct bank must be of same type.
   3. Slope: Pitch duct minimum slope of 1:300 down toward manholes and handholes and away from buildings and equipment. Slope duct from high point between two manholes to drain in both directions.

4. Expansion and Deflection Fittings: Install expansion and deflection fitting in each duct in area of disturbed earth adjacent to manhole or handhole.
5. Install expansion fitting near center of straight line duct with calculated expansion of more than 3/4 inch.
6. Curves and Bends:
    a. Use 5-degree angle couplings for small changes in direction. Use manufactured long sweep bends with minimum radius of 48 inch, both horizontally and vertically, at other locations unless otherwise indicated.
    b. Field bending must be in accordance with NFPA 70 minimum radii requirements, except bends over 45 degrees must be made with minimum radius of 48 inch. Use only equipment specifically designed for material and size involved. Use PVC heating bender for bending PVC conduit.
    c. Duct must have maximum of 180 degrees of bends between pull points.
7. Joints: Use solvent-cemented joints in nonmetallic duct and fittings and make watertight in accordance with manufacturer's published instructions. Stagger couplings so those of adjacent duct do not lie in same plane. Couple steel conduits to ducts with adapters designed for this purpose, and encase coupling with minimum 3 inch of concrete for minimum of 12 inch on each side of coupling.
    a. Install insulated grounding bushings on steel raceway terminations that are less than 12 inch below grade or floor level and do not terminate in hubs.
8. Installation Adjacent to High-Temperature Steam Lines: Where duct is installed parallel to underground steam lines, perform calculations showing duct will not be subject to environmental temperatures above 104 deg F (40 deg C). Where environmental temperatures are calculated to rise above 104 deg F (40 deg C), and anywhere duct crosses above underground steam line, install insulation blankets listed for direct burial to isolate duct bank from steam line to maintain maximum environmental temperature of 104 deg F (40 deg C).
9. End Bell Entrances to Manholes and Concrete and Polymer Concrete Handholes: Use end bells, spaced approximately 10 inch o.c. for 5 inch duct, and vary proportionately for other duct sizes.
    a. Begin change from regular spacing to end-bell spacing 10 ft (3 m) from end bell, without reducing duct slope and without forming trap in line.
    b. Grout end bells into structure walls from both sides to provide watertight entrances.
10. Duct Terminators for Entrances to Cast-in-Place Manholes and Concrete Handholes: Use manufactured, cast-in-place duct terminators, with entrances into structure spaced approximately 6 inch o.c. for 4 inch duct, and vary proportionately for other duct sizes.
    a. Begin change from regular spacing to terminator spacing 10 ft (3 m) from terminator, without reducing duct line slope and without forming trap in line.
11. Building Wall Penetrations: Make transition from underground duct to steel raceway at least 10 ft (3 m) outside building wall, without reducing duct line slope away from building and without forming trap in line. Use fittings manufactured for transition to steel raceway type installed. Install steel raceway penetrations of building walls as specified in Section 260544 "Sleeves and Sleeve Seals for Electrical Raceways and Cabling."
12. Sealing: Provide temporary closure at terminations of duct with pulled cables. Seal spare duct at terminations. Use sealing compound and plugs to withstand at least 15 psig hydrostatic pressure.
13. Pulling Cord: Install 200 lbf (1000 N) test nylon cord in empty ducts.
14. Concrete-Encased Ducts and Duct Bank:
    a. Excavate trench bottom to provide firm and uniform support for duct. Prepare trench bottoms as specified in Section 312000 "Earth Moving" for pipes 6 inch or less in nominal diameter.
    b. Width: Excavate trench 3 inch wider than duct on each side.
    c. Depth: Install so top of duct envelope is at least 24 inch below finished grade in areas not subject to deliberate traffic, and at least 30 inch below finished grade in deliberate traffic paths for vehicles unless otherwise indicated. Install so top of duct envelope is below local frost line.
    d. Support duct on duct spacers coordinated with duct size, duct spacing, and outdoor temperature.
    e. Spacer Installation: Place spacers close enough to prevent sagging and deforming of duct, with not less than four spacers per 20 ft (6 m) of duct. Place spacers within 24 inch of duct

ends. Stagger spacers approximately 6 inch between tiers. Secure spacers to earth and to duct to prevent floating during concreting. Tie entire assembly together using fabric straps; do not use tie wires or reinforcing steel that may form conductive or magnetic loops around ducts or duct groups.

f. Minimum Space between Ducts: 3 inch between edge of duct and exterior envelope wall, 2 inch between ducts for like services, and 4 inch between power and communications ducts.

g. Stub-ups to Outdoor Equipment: Extend concrete-encased steel raceway horizontally minimum of 60 inch from edge of equipment base.

1) Stub-ups must be minimum 4 inch above finished floor and minimum 3 inch from conduit side to edge of slab.

h. Stub-ups to Indoor Equipment: Extend concrete-encased steel raceway horizontally minimum of 60 inch from edge of wall. Install insulated grounding bushings on terminations at equipment.

1) Stub-ups must be minimum 4 inch above finished floor and no less than 3 inch from conduit side to edge of slab.

i. Reinforcement: Reinforce concrete-encased duct where crossing disturbed earth and where indicated. Arrange reinforcing rods and ties without forming conductive or magnetic loops around ducts or duct groups.

j. Forms: Use walls of trench to form side walls of duct bank where soil is self-supporting and concrete envelope can be poured without soil inclusions; otherwise, use forms.

k. Concrete Cover: Install minimum of 3 inch of concrete cover between edge of duct to exterior envelope wall, 2 inch between duct of like services, and 4 inch between power and communications ducts.

l. Place minimum 6 inch of engineered fill above concrete encasement of duct.

m. Pouring Concrete: Comply with requirements in "Concrete Placement" Article in Section 033000 "Cast-in-Place Concrete." Place concrete carefully during pours to prevent voids under and between duct and at exterior surface of envelope. Do not allow heavy mass of concrete to fall directly onto ducts. Allow concrete to flow around duct and rise up in middle, uniformly filling open spaces. Do not use power-driven agitating equipment unless specifically designed for duct-installation application.

15. Direct-Buried Duct and Duct Bank:

a. Excavate trench bottom to provide firm and uniform support for duct. Comply with requirements in Section 312000 "Earth Moving" for preparation of trench bottoms for pipes less than 6 inch in nominal diameter.

b. Width: Excavate trench 3 inch wider than duct on each side.

c. Depth: Install top of duct at least 36 inch below finished grade unless otherwise indicated.

d. Set elevation of top of duct bank below frost line.

e. Place minimum 3 inch of sand as bed for duct. Place sand to minimum of 6 inch above top level of duct.

f. Support ducts on duct spacers coordinated with duct size, duct spacing, and outdoor temperature.

g. Spacer Installation: Place spacers close enough to prevent sagging and deforming of duct, with not less than four spacers per 20 ft (6 m) of duct. Place spacers within 24 inch of duct ends. Stagger spacers approximately 6 inch between tiers. Secure spacers to earth and to ducts to prevent floating during concreting. Tie entire assembly together using fabric straps; do not use tie wires or reinforcing steel that may form conductive or magnetic loops around ducts or duct groups.

h. Install duct with minimum of 3 inch between ducts for like services and 6 inch between power and communications duct.

i. After installing first tier of duct, backfill and compact. Start at tie-in point and work toward end of duct run, leaving ducts at end of run free to move with expansion and contraction as temperature changes during this process. Repeat procedure after placing each tier. After placing last tier, hand place backfill to 4 inch over duct and hand tamp. Firmly tamp backfill around ducts to provide maximum supporting strength. Use hand tamper only. After placing controlled backfill over final tier, make final duct connections at end of run and complete backfilling with normal compaction. Comply with requirements in Section 312000 "Earth Moving" for installation of backfill materials.

16. Underground-Line Warning Tape: Bury conducting underground line specified in Section 260553 "Identification for Electrical Systems" no less than 12 inch above concrete-encased duct and duct banks and approximately 12 inch below grade. Align tape parallel to and within 3 inch of centerline of duct bank. Provide additional warning tape for each 12 inch increment of duct-bank width over nominal 18 inch. Space additional tapes 12 inch apart, horizontally across width of ducts.
17. Ground ducts and duct banks in accordance with Section 260526 "Grounding and Bonding for Electrical Systems."

3.6 INSTALLATION OF CONCRETE MANHOLES, HANDHOLES, AND BOXES

A. Reference Standards:
1. Precast Concrete Handholes: Comply with ASTM C891 unless otherwise indicated.
2. Consult Architect for resolution of conflicting requirements.

B. Special Techniques:
1. Cast-in-Place Manholes:
a. Finish interior surfaces with smooth-troweled finish.
b. Knockouts for Future Duct Connections: Form and pour concrete knockout panels 1-1/2 to 2 inch (38 to 50 mm) thick, arranged as indicated.
c. Comply with requirements in Section 033000 "Cast-in-Place Concrete" for cast-in-place concrete, formwork, and reinforcement.
2. Precast Concrete Handholes and Manholes:
a. Install units level and plumb and with orientation and depth coordinated with connecting duct to minimize bends and deflections required for proper entrances.
b. Unless otherwise indicated, support units on level bed of crushed stone or gravel graded from 1 inch sieve to No. 4 (4.75 mm) sieve and compacted to same density as adjacent undisturbed earth.
c. Field-cut openings for conduits in accordance with enclosure manufacturer's published instructions. Cut wall of enclosure with tool designed for material to be cut. Size holes for terminating fittings to be used, and seal around penetrations after fittings are installed.
3. Elevations:
a. Manhole Roof: Install with rooftop at least 15 inch below finished grade.
b. Manhole Frame: In paved areas and trafficways, set frames flush with finished grade. Set other manhole frames 1 inch above finished grade.
c. Install handholes with bottom below frost line below grade.
d. Handhole Covers: In paved areas and trafficways, set surface flush with finished grade. Set covers of other handholes 1 inch above finished grade.
e. Where indicated, cast handhole cover frame integrally with handhole structure.
4. Drainage: Install drains in bottom of manholes where indicated. Coordinate with drainage provisions indicated.
5. Manhole Access: Circular opening in manhole roof; sized to match cover size.
a. Manholes with Fixed Ladders: Offset access opening from manhole centerlines to align with ladder.
b. Install chimney, constructed of precast concrete collars and rings, and cast-iron frame to connect cover with manhole roof opening. Provide moisture-tight joints and waterproof grouting for frame and chimney.
6. Waterproofing: Apply waterproofing to exterior surfaces of manholes after concrete has cured at least three days. After duct has been connected and grouted, and before backfilling, waterproof joints and connections, and touch up abrasions and scars. Waterproof exterior of manhole chimneys after mortar has cured at least three days.
7. Hardware: Install removable hardware, including pulling eyes, cable stanchions, and cable arms, and insulators, as required for installation and support of cables and conductors and as indicated.
8. Fixed Manhole Ladders: Arrange to provide for safe entry with maximum clearance from cables and other items in manholes.
9. Field-Installed Bolting Anchors in Manholes and Concrete Handholes: Do not drill deeper than 3-7/8 inch for manholes and 2 inch for handholes, for anchor bolts installed in field. Use minimum of two anchors for each cable stanchion.

10. Ground manholes, handholes, and boxes in accordance with Section 260526 "Grounding and Bonding for Electrical Systems."

3.7 FIELD QUALITY CONTROL

A. Field tests and inspections must be witnessed by authorities having jurisdiction.
B. Tests and Inspections:
   1. Demonstrate capability and compliance with requirements on completion of installation of underground duct, duct bank, and utility structures.
   2. Pull solid aluminum or wood test mandrel through duct to prove joint integrity and adequate bend radii, and test for out-of-round duct. Provide minimum 12 inch long mandrel equal to duct size minus 1/4 inch. If obstructions are indicated, remove obstructions and retest.
   3. Test manhole and handhole grounding to ensure electrical continuity of grounding and bonding connections. Measure and report ground resistance as specified in Section 260526 "Grounding and Bonding for Electrical Systems."
C. Nonconforming Work:
   1. Underground ducts, raceways, and structures will be considered defective if they do not pass tests and inspections.
   2. Correct deficiencies and retest as specified above to demonstrate compliance.
D. Assemble and submit test and inspection reports.
E. Manufacturer Services:
   1. Engage factory-authorized service representative to support field tests and inspections.

END OF SECTION

SECTION 260544 - SLEEVES AND SLEEVE SEALS FOR ELECTRICAL RACEWAYS AND CABLING

PART 1 GENERAL

1.1 SUMMARY

A. Section Includes:
1. Round sleeves.
2. Rectangular sleeves.
3. Sleeve-seal systems.
4. Sleeve-seal fittings.
5. Grout.
6. Pourable sealants.
7. Foam sealants.

B. Related Requirements:
1. Section 260010 "Supplemental Requirements for Electrical" for additional abbreviations, definitions, submittals, qualifications, testing agencies, and other Project requirements applicable to Work specified in this Section.
2. Section 260011 "Facility Performance Requirements for Electrical" for seismic-load, wind-load, acoustical, and other field conditions applicable to Work specified in this Section.

1.2 ACTION SUBMITTALS

A. Product Data: For each type of product.

PART 2 PRODUCTS

2.1 ROUND SLEEVES

A. Steel Wall Sleeves:
1. General Characteristics: ASTM A53/A53M, Type E, Grade B, Schedule 40, zinc coated, plain ends and integral waterstop.

B. PVC Pipe Sleeves:
1. General Characteristics: ASTM D1785, Schedule 40.

C. Round, Galvanized-Steel, Sheet Metal Sleeves:
1. General Characteristics: Galvanized-steel sheet; thickness not less than 0.0239 inch; round tube closed with welded longitudinal joint, with tabs for screw-fastening the sleeve to the board.

2.2 RECTANGULAR SLEEVES

A. Rectangular, Galvanized-Steel, Sheet Metal Sleeves:
1. General Characteristics:
a. Material: Galvanized sheet steel.
b. Minimum Metal Thickness:
1) For sleeve cross-section rectangle perimeter less than 50 inch and with no side larger than 16 inch, thickness must be 0.052 inch.
2) For sleeve cross-section rectangle perimeter not less than 50 inch or with one or more sides larger than 16 inch, thickness must be 0.138 inch.

2.3 SLEEVE-SEAL SYSTEMS

A. General Characteristics: Modular sealing device, designed for field assembly, to fill annular space between sleeve and raceway or cable or between raceway and cable.

B. Options:

1. Sealing Elements: EPDM rubber interlocking links shaped to fit surface of pipe. Include type and number required for pipe material and size of pipe.
2. Pressure Plates: Carbon steel.
3. Connecting Bolts and Nuts: Carbon steel, with corrosion-resistant coating of length required to secure pressure plates to sealing elements.

2.4 SLEEVE-SEAL FITTINGS

A. General Characteristics: Manufactured plastic, sleeve-type, waterstop assembly made for embedding in concrete slab or wall. Unit must have plastic or rubber waterstop collar with center opening to match piping OD.

2.5 GROUT

A. General Characteristics: Nonshrink; recommended for interior and exterior sealing openings in non-fire-rated walls or floors.
1. Standard: ASTM C1107/C1107M, Grade B, post-hardening and volume-adjusting, dry, hydraulic-cement grout.
2. Design Mix: 5000 psi, 28-day compressive strength.
3. Packaging: Premixed and factory packaged.

2.6 POURABLE SEALANTS

A. Performance Criteria:
1. General Characteristics: Single-component, neutral-curing elastomeric sealants of grade indicated below.
a. Grade: Pourable (self-leveling) formulation for openings in floors and other horizontal surfaces that are not fire rated.

2.7 FOAM SEALANTS

A. Performance Criteria:
1. General Characteristics: Multicomponent, liquid elastomers that, when mixed, expand and cure in place to produce a flexible, nonshrinking foam. Foam expansion must not damage cables or crack penetrated structure.
2. Sustainability Characteristics:

PART 3 EXECUTION

3.1 INSTALLATION OF SLEEVES FOR NON-FIRE-RATED ELECTRICAL PENETRATIONS

A. Sleeves for Conduits Penetrating Above-Grade, Non-Fire-Rated, Concrete and Masonry-Unit Floors and Walls:
1. Interior Penetrations of Non-Fire-Rated Walls and Floors:
a. Seal space outside of sleeves with mortar or grout. Pack sealing material solidly between sleeve and wall or floor so no voids remain. Tool exposed surfaces smooth; protect material while curing.
b. Seal annular space between sleeve and raceway or cable, using joint sealant appropriate for size, depth, and location of joint. Comply with requirements in Section 079200 "Joint Sealants."
2. Use pipe sleeves unless penetration arrangement requires rectangular sleeved opening.
3. Size pipe sleeves to provide 1/4 inch annular clear space between sleeve and raceway or cable, unless sleeve-seal system is to be installed or seismic criteria require different clearance.
4. Install sleeves for wall penetrations unless core-drilled holes or formed openings are used. Install sleeves during erection of walls. Cut sleeves to length for mounting flush with both surfaces of walls. Deburr after cutting.

5. Install sleeves for floor penetrations. Extend sleeves installed in floors 2 inch above finished floor level. Install sleeves during erection of floors.

B. Sleeves for Conduits Penetrating Non-Fire-Rated Wall Assemblies:

1. Use circular metal sleeves unless penetration arrangement requires rectangular sleeved opening.
2. Seal space outside of sleeves with approved joint compound for wall assemblies.

C. Roof-Penetration Sleeves: Seal penetration of individual raceways and cables with flexible boot-type flashing units applied in coordination with roofing work.

D. Aboveground, Exterior-Wall Penetrations: Seal penetrations using steel pipe sleeves and mechanical sleeve-seal systems. Size sleeves to allow for 1 inch annular clear space between pipe and sleeve for installing mechanical sleeve seals.

E. Underground, Exterior-Wall and Floor Penetrations:

1. Install steel pipe sleeves with integral waterstops. Size sleeves to allow for 1 inch annular clear space between raceway or cable and sleeve for installing sleeve-seal system. Install sleeve during construction of floor or wall.
2. Install steel pipe sleeves. Size sleeves to allow for 1 inch annular clear space between raceway or cable and sleeve for installing sleeve-seal system. Grout sleeve into wall or floor opening.

3.2 INSTALLATION OF RECTANGULAR SLEEVES AND SLEEVE SEALS

A. Install sleeves in existing walls without compromising structural integrity of walls. Do not cut structural elements without reinforcing the wall to maintain the designed weight bearing and wall stiffness.

B. Install conduits and cable with no crossings within the sleeve.

C. Fill opening around conduits and cables with expanding foam without leaving voids.

D. Provide metal sheet covering at both wall surfaces and finish to match surrounding surfaces. Metal sheet must be same material as sleeve.

3.3 INSTALLATION OF SLEEVE-SEAL SYSTEMS

A. Install sleeve-seal systems in sleeves in exterior concrete walls and slabs-on-grade at raceway entries into building.

B. Install type and number of sealing elements recommended by manufacturer for raceway or cable material and size. Position raceway or cable in center of sleeve. Assemble mechanical sleeve seals and install in annular space between raceway or cable and sleeve. Tighten bolts against pressure plates that cause sealing elements to expand and make watertight seal.

END OF SECTION

SECTION 260548 - VIBRATION AND SEISMIC CONTROLS FOR ELECTRICAL SYSTEMS

PART 1 GENERAL

1.1 SUMMARY

A. Section Includes:
   1. Elastomeric isolation pads.
   2. Restraints - rigid type.
   3. Restraints - cable type.
   4. Restraint accessories.
   5. Post-Installed concrete anchors.
   6. Concrete inserts.

B. Related Requirements:
   1. Section 260010 "Supplemental Requirements for Electrical" for additional abbreviations, definitions, submittals, qualifications, testing agencies, and other Project requirements applicable to Work specified in this Section.
   2. Section 260011 "Facility Performance Requirements for Electrical" for seismic-load, wind-load, acoustical, and other field conditions applicable to Work specified in this Section.
   3. Section 260529 "Hangers and Supports for Electrical Systems" for commonly used electrical supports and installation requirements.

1.2 ACTION SUBMITTALS

A. Product Data:
   1. Include rated load capacity for each seismic- and wind-load-restraint device.
   2. Illustrate and indicate style, material, strength, fastening provision, and finish for each type and size of seismic- and wind-load-restraint component used.
   3. Annotate types and sizes of seismic restraints and accessories, complete with listing markings or report numbers and load rating in tension and compression as evaluated by an agency acceptable to authorities having jurisdiction.
   4. Annotate to indicate application of each product submitted and compliance with requirements.

B. Shop Drawings:
   1. Detail fabrication and assembly of equipment bases.
   2. Vibration Isolation Base Details: Detail fabrication including anchorages and attachments to structure and to supported equipment. Include adjustable motor bases, rails, and frames for equipment mounting.

C. Delegated Design Submittal for Each Seismic-Restraint Device: Signed and sealed by qualified structural professional engineer.
   1. For each seismic-restraint device, including restraint - rigid and cable type, restraint accessory, and concrete anchor and insert that is required by this Section or is indicated on Drawings, submit the following:
      a. Seismic Restraints: Select seismic restraints complying with performance requirements, design criteria, and analysis data.
      b. Post-Installed Concrete Anchors and Inserts: Include calculations showing anticipated seismic loads. Include certification that device is approved by an NRTL for seismic reinforcement use.
      c. Seismic Design Calculations: Submit input data and loading calculations prepared under "Seismic Design Calculations" Paragraph in "Performance Requirements" Article.

D. Delegated Design Submittal for Each Wind-Load Protection Device: Signed and sealed by qualified structural professional engineer.
   1. For each wind-load protection device, including restraint - rigid and cable type, restraint accessory, and concrete anchor and insert that is required by this Section or is indicated on Drawings, submit the following:

a. Wind-Load Restraint: Select wind-load restraints complying with performance requirements, design criteria, and analysis data.
b. Post-Installed Concrete Anchors and Inserts: Include calculations showing anticipated wind loads. Include certification that device is approved by an NRTL for reinforcement use.
c. Wind-Load Design Calculations: Submit static and dynamic loading calculations prepared under "Wind-Load Design Calculations" Paragraph in "Performance Requirements" Article.

2. Seismic- and Wind-Load-Restraint Detail Drawings: Signed and sealed by qualified structural professional engineer.
   a. Design Analysis: To support selection and arrangement of seismic and wind-load restraints. Include calculations of combined tensile and shear loads.
   b. Details: Indicate fabrication and arrangement. Detail attachments of restraints to restrained items and to the structure. Show attachment locations, methods, and spacings. Identify components, list their strengths, and indicate directions and values of forces transmitted to the structure during seismic events. Indicate association with vibration isolation devices.
   c. Coordinate seismic-restraint details with wind-load details required for equipment mounted outdoors.
3. Product Listing, Preapproval, and Evaluation Documentation: By an agency acceptable to authorities having jurisdiction, showing maximum ratings of restraint items and the basis for approval (tests or calculations).

1.3 INFORMATIONAL SUBMITTALS

A. Field quality-control reports.

PART 2 PRODUCTS

2.1 PERFORMANCE REQUIREMENTS

A. Delegated Design: Engage qualified structural professional engineer to design seismic and wind-load control system in accordance with criteria specified in Section 260010 "Supplemental Requirements for Electrical" and Section 260011 "Facility Performance Requirements for Electrical."
B. Seismic- and Wind-Load-Restraint Device Load Ratings: Devices to be tested and rated in accordance with applicable code requirements and authorities having jurisdiction. Devices to be listed by a nationally recognized third party that requires periodic follow-up inspections and has a listing directory available to the public. Provide third-party listing by one or more of the following: an agency acceptable to authorities having jurisdiction.
C. Consequential Damage: Provide additional seismic and wind-load restraints for suspended electrical components or anchorage of floor-, roof-, or wall-mounted components so that failure of a non-essential or essential component will not cause failure of any other essential building component.
D. Fire/Smoke Resistance: Seismic- and wind-load-restraint devices that are not constructed of ferrous metals must have a maximum flame-spread index of 25 and maximum smoke-developed index of 50 when tested by an NRTL in accordance with ASTM E84 or UL 723, and be so labeled.
E. Component Supports:
   1. Load ratings, features, and applications of reinforcement components must be based on testing standards of a nationally recognized testing agency.

2.2 ELASTOMERIC ISOLATION PADS

A. Elastomeric Isolation Pads:
   1. Fabrication: Single or multiple layers of sufficient durometer stiffness for uniform loading over pad area.
   2. Size: Factory or field cut to match requirements of supported equipment.
   3. Pad Material: Oil and water resistant with elastomeric properties. Neoprene rubber, silicone rubber, or other elastomeric material.
   4. Surface Pattern: Smooth, ribbed, or waffle pattern.
   5. Infused nonwoven cotton or synthetic fibers.

6. Load-bearing metal plates adhered to pads.
7. Sandwich-Core Material: Resilient and elastomeric.
    a. Surface Pattern: Smooth, ribbed, or waffle pattern.
    b. Infused nonwoven cotton or synthetic fibers.

2.3 RESTRAINTS - RIGID TYPE

A. Description: Shop- or field-fabricated bracing assembly made of ANSI/AISI S110-07-S1 slotted steel channels, ANSI/ASTM A53/A53M steel pipe, or other rigid steel brace member. Includes accessories for attachment to braced component at one end and to building structure at the other end and other matching components and with corrosion-resistant coating; rated in tension, compression, and torsion forces.

2.4 RESTRAINTS - CABLE TYPE

A. Seismic- and Wind-Load-Restraint Cables: ASTM A492 stainless steel cables. End connections made of steel assemblies with thimbles, brackets, swivel, and bolts designed for seismic-restraining cable service; with fittings attached by means of poured socket, swaged socket, or mechanical (Flemish eye) loop.
B. Restraint cable assembly and cable fittings must comply with ASCE/SEI 19. Cable fittings and complete cable assembly must maintain the minimum cable breaking force. U-shaped cable clips and wedge-type end fittings do not comply and are unacceptable.

2.5 RESTRAINT ACCESSORIES

A. Hanger-Rod Stiffener: Steel tube or steel slotted-support-system sleeve with internally bolted connections to hanger rod. Non-metallic stiffeners are unacceptable.
B. Hinged and Swivel Brace Attachments: Multifunctional steel connectors for attaching hangers to rigid channel bracings and restraint cables.
C. Bushings for Floor-Mounted Equipment Anchor Bolts: Neoprene bushings designed for rigid equipment mountings, and matched to type and size of anchor bolts and studs.
D. Bushing Assemblies for Wall-Mounted Equipment Anchorage: Assemblies of neoprene elements and steel sleeves designed for rigid equipment mountings, and matched to type and size of attachment devices used.
E. Resilient Isolation Washers and Bushings: One-piece, molded, oil- and water-resistant neoprene, with a flat washer face.

2.6 POST-INSTALLED CONCRETE ANCHORS

A. Mechanical Anchor Bolts:
    1. Drilled-in and stud-wedge or female-wedge type in zinc-coated steel for interior applications and stainless steel for exterior applications. Select anchor bolts with strength for anchor and as tested according to ASTM E488/E488M.
B. Provide post-installed concrete anchors that have been prequalified for use in seismic and wind-load applications.
    1. Prequalify post-installed anchors in concrete in accordance with ACI 355.2 or other approved qualification testing procedures.
    2. Prequalify post-installed anchors in masonry in accordance with approved qualification procedures.
C. Expansion-type anchor bolts are not permitted for equipment in excess of 10 hp (7.46 kW) that is not vibration isolated.
    1. Undercut expansion anchors are permitted.

2.7 CONCRETE INSERTS

A. Provide preset concrete inserts that are seismically prequalified in accordance with ICC-ES AC446 testing.
B. Comply with MSS SP-58.

PART 3 EXECUTION

3.1 EXAMINATION

A. Examine areas and equipment to receive seismic and wind-load control devices for compliance with requirements for installation tolerances and other conditions affecting performance of the Work.
B. Examine roughing-in for reinforcement and cast-in-place anchors to verify actual locations before installation.
C. Proceed with installation only after unsatisfactory conditions have been corrected.

3.2 APPLICATIONS

A. Multiple Raceways or Cables: Secure raceways and cables to trapeze member with clamps approved for application by an agency acceptable to authorities having jurisdiction.
B. Hanger-Rod Stiffeners: Install where indicated or scheduled on Drawings to receive them and where required to prevent buckling of hanger rods caused by seismic forces.
C. Strength of Support and Seismic-Restraint Assemblies: Where not indicated, select sizes of components so strength will be adequate to carry static, wind load, and seismic loads within specified loading limits.

3.3 INSTALLATION OF SEISMIC-RESTRAINT AND WIND-LOAD CONTROL DEVICES

A. Provide seismic restraint and wind-load control devices for systems and equipment where indicated in Equipment Schedules or Seismic and Wind-Load Controls Schedule, where indicated on Drawings, where the Specifications indicate they are to be installed on specific equipment and systems, and where required by applicable codes.
   1. Install equipment and devices to withstand the effects of earthquake motions and high wind events.
B. Coordinate location of embedded connection hardware with supported equipment attachment and mounting points and with requirements for concrete reinforcement and formwork specified in Section 033000 "Cast-in-Place Concrete."
C. Installation of seismic and wind-load restraints must not cause any stresses, misalignment, or change of position of equipment or conduits.
D. Equipment Restraints:
   1. Install resilient bolt isolation washers on equipment anchor bolts where clearance between anchor and adjacent surface exceeds 0.125 inch.
   2. Install seismic-restraint and wind-load-restraint devices using methods approved by an agency acceptable to authorities having jurisdiction that provides required submittals for component.
E. Raceway, Cable, Wireway, Cable Tray, and Busway Support and Hanger Restraints:
   1. Install resilient bolt isolation washers on equipment anchor bolts where clearance between anchor and adjacent surface exceeds 0.125 inch.
   2. Install seismic-restraint and wind-load-restraint devices using methods approved by an agency acceptable to authorities having jurisdiction that provides required submittals for component.
   3. Install resilient, bolt-isolation washers on equipment anchor bolts where clearance between anchor and adjacent surface exceeds 0.125 inch.
   4. Install seismic-restraint devices using methods approved by an agency acceptable to authorities having jurisdiction providing required submittals for component.
F. Install cables so they do not bend across edges of adjacent equipment or building structure.
G. Install bushing assemblies for mounting bolts for wall-mounted equipment, arranged to provide resilient media where equipment or equipment-mounting channels are attached to wall.
H. Attachment to Structure: If specific attachment is not indicated, anchor bracing to structure at flanges of beams, at upper truss chords of bar joists, or at concrete members.
I. Post-Installed Concrete Anchors:
   1. Identify position of reinforcing steel and other embedded items prior to drilling holes for anchors. Do not damage existing reinforcing or embedded items during coring or drilling. Notify structural engineer if reinforcing steel or other embedded items are encountered during drilling. Locate and avoid prestressed tendons, electrical and telecommunications conduit, and gas lines.

2. Do not drill holes in concrete or masonry until concrete, mortar, or grout has achieved full design strength.
3. Mechanical-Type Anchor Bolts: Protect threads from damage during anchor installation. Heavy-duty sleeve anchors must be installed with sleeve fully engaged in the structural element to which anchor is to be fastened.
4. Set anchors to manufacturer's recommended torque using a torque wrench.
5. Install zinc-coated steel anchors for interior and stainless steel anchors for exterior applications.

3.4 ACCOMMODATION OF DIFFERENTIAL SEISMIC MOTION

A. Install flexible connections in runs of raceways, cables, wireways, cable trays, and busways where they cross seismic joints, where adjacent sections or branches are supported by different structural elements, and where connection is terminated to equipment that is anchored to a different structural element from the one supporting them as they approach equipment.

3.5 FIELD QUALITY CONTROL

A. Field tests must be witnessed by authorities having jurisdiction.
B. Tests and Inspections:
   1. Perform tests and inspections with the assistance of a factory-authorized service representative.
   2. Provide evidence of recent calibration of test equipment by a testing agency acceptable to authorities having jurisdiction.
   3. Schedule test with Owner, through Architect, before connecting anchorage device to restrained component (unless postconnection testing has been approved), and with at least seven days' advance notice.
   4. Obtain Architect's approval before transmitting test loads to structure. Provide temporary load-spreading members.
   5. Test no fewer than four of each type and size of installed anchors and fasteners selected by Architect.
   6. Test to 90 percent of rated proof load of device.
C. Nonconforming Work:
   1. Seismic controls will be considered defective if they do not pass tests and inspections.
   2. Remove and replace malfunctioning units and retest as specified above.
D. Prepare test and inspection reports.

END OF SECTION

SECTION 260553 - IDENTIFICATION FOR ELECTRICAL SYSTEMS

PART 1 GENERAL

1.1 SUMMARY

A. Section Includes:
1. Labels.
2. Extruded insulating tubing.
3. Bands.
4. Tapes and stencils.
5. Tags.
6. Signs.
7. Cable ties.

B. Related Requirements:
1. Section 260010 "Supplemental Requirements for Electrical" for additional abbreviations, definitions, submittals, qualifications, testing agencies, and other Project requirements applicable to Work specified in this Section.
2. Section 260011 "Facility Performance Requirements for Electrical" for seismic-load, wind-load, acoustical, and other field conditions applicable to Work specified in this Section.

1.2 ACTION SUBMITTALS

A. Product data.

PART 2 PRODUCTS

2.1 LABELS

A. Performance Criteria:
1. Regulatory Requirements: Listed and labeled in accordance with NFPA 70, by qualified electrical testing laboratory recognized by authorities having jurisdiction, and marked for intended location and application.
2. Listing Criteria: UL CCN PGDQ2 for components; including UL 969.

B. UL PGDQ2 - Vinyl Wraparound Labels: Preprinted, flexible labels laminated with clear, weather- and chemical-resistant coating and matching wraparound clear adhesive tape for securing label ends.

C. UL PGDQ2 - Self-Adhesive Wraparound Labels: Preprinted, 3 mil thick, vinyl flexible label with acrylic pressure-sensitive adhesive.
1. Self-Lamination: Clear; UV-, weather-, and chemical-resistant; self-laminating, with protective shield over legend. Size labels such that clear shield overlaps entire printed legend.
2. Marker for Labels:
a. Permanent, waterproof, black ink marker recommended by tag manufacturer.

D. UL PGDQ2 - Self-Adhesive Labels: Vinyl, thermal, transfer-printed, 3 mil thick, multicolor, weather- and UV-resistant, pressure-sensitive adhesive labels, configured for intended use and location.
1. Minimum Nominal Size:
a. 1-1/2 by 6 inch (37 by 150 mm) for raceway and conductors.
b. 3-1/2 by 5 inch (76 by 127 mm) for equipment.
c. As required by authorities having jurisdiction.

2.2 EXTRUDED INSULATING TUBING

A. Performance Criteria:

1. Regulatory Requirements: Listed and labeled in accordance with NFPA 70, by qualified electrical testing laboratory recognized by authorities having jurisdiction, and marked for intended location and application.
2. Listing Criteria: UL CCN YDPU2 for components; including UL 224.

B. UL YDPU2 - Heat-Shrink Preprinted Tubes: Flame-retardant polyolefin tubes with machine-printed identification labels, sized to suit diameter and shrunk to fit firmly. Full shrink recovery occurs at maximum of 200 deg F (93 deg C).

2.3 BANDS

A. Snap-Around Labels: Slit, pretensioned, flexible, preprinted, color-coded acrylic sleeves, with diameters sized to suit diameters and that stay in place by gripping action.

B. Snap-Around, Color-Coding Bands: Slit, pretensioned, flexible, solid-colored acrylic sleeves, 2 inch long, with diameters sized to suit diameters and that stay in place by gripping action.

2.4 TAPES AND STENCILS

A. Marker Tapes: Vinyl or vinyl-cloth, self-adhesive wraparound type, with circuit identification legend machine printed by thermal transfer or equivalent process.

B. Self-Adhesive Vinyl Tape: Colored, heavy duty, waterproof, fade resistant; not less than 3 mil thick by 1 to 2 inch (25 to 50 mm) wide; compounded for outdoor use.

C. Tape and Stencil: 4 inch wide black stripes on 10 inch centers placed diagonally over orange background and are 12 inch wide. Stop stripes at legends.

D. Floor Marking Tape: 2 inch wide, 5 mil pressure-sensitive vinyl tape, with yellow and black stripes and clear vinyl overlay.

E. Underground-Line Warning Tape:
1. Tape:
   a. Recommended by manufacturer for method of installation and suitable to identify and locate underground electrical and communications utility lines.
   b. Printing on tape must be permanent and may not be damaged by burial operations.
   c. Tape material and ink must be chemically inert and not be subject to degradation when exposed to acids, alkalis, and other destructive substances commonly found in soils.
2. Color and Printing:
   a. Comply with APWA Uniform Color Code using NEMA Z535.1 safety colors.
   b. Inscriptions for Red Tapes: "CAUTION BURIED ELECTRIC LINE BELOW".
   c. Inscriptions for Orange Tapes: "CAUTION BURIED COMMUNICATION LINE BELOW".
3. Detectable Line-Warning Tape:
   a. Detectable three-layer laminate, consisting of printed pigmented polyolefin film, solid aluminum-foil core, and clear protective film that allows inspection of continuity of conductive core; bright colored, continuous-printed on one side with inscription of utility, compounded for direct-burial service.
   b. Width: 3 inch.
   c. Overall Thickness: 5 mil.
   d. Foil Core Thickness: 0.35 mil.
   e. Weight: 28 lb/1000 sq. ft (13.7 kg/100 sq. m).
   f. Tensile in accordance with ASTM D882: 70 lbf (311.3 N) and 4600 psi.

2.5 TAGS

A. Metal Tags: Brass or aluminum, 2 by 2 by 0.05 inch (50 by 50 by 1.3 mm), with stamped legend, punched for use with self-locking cable tie fastener.

B. Nonmetallic Preprinted Tags: Polyethylene tags, 0.015 inch thick, color-coded for phase and voltage level, with factory screened permanent designations; punched for use with self-locking cable tie fastener.

2.6 SIGNS

A. Baked-Enamel Signs:

1. Preprinted aluminum signs, high-intensity reflective, punched or drilled for fasteners, with colors, legend, and size required for application.
2. 1/4 inch grommets in corners for mounting.
3. Nominal Size: 7 by 10 inch (180 by 250 mm).

B. Metal-Backed Butyrate Signs:
1. Weather-resistant, nonfading, preprinted, cellulose-acetate butyrate signs, with 0.0396 inch galvanized-steel backing, punched and drilled for fasteners, and with colors, legend, and size required for application.
2. 1/4 inch grommets in corners for mounting.
3. Nominal Size: 10 by 14 inch (250 by 360 mm).

C. Laminated Acrylic or Melamine Plastic Signs:
1. Engraved legend.
2. Thickness:
a. For signs up to 20 sq. inch (129 sq. cm), minimum 1/16 inch thick.
b. For signs larger than 20 sq. inch (129 sq. cm), 1/8 inch thick.
c. Engraved legend with black letters on white face.
d. Punched or drilled for mechanical fasteners with 1/4 inch grommets in corners for mounting.
e. Framed with mitered acrylic molding and arranged for attachment at applicable equipment.

2.7 CABLE TIES

A. Performance Criteria:
1. Regulatory Requirements: Listed and labeled in accordance with NFPA 70, by qualified electrical testing laboratory recognized by authorities having jurisdiction, and marked for intended location and application.
2. Listing Criteria: UL CCN ZODZ; including UL 1565 or UL 62275.

B. UL ZODZ - General-Purpose Cable Ties: Fungus inert, self-extinguishing, one piece, self-locking, and Type 6/6 nylon.
1. Minimum Width: 3/16 inch.
2. Tensile Strength at 73 deg F (23 deg C) in accordance with ASTM D638: 12,000 psi.
3. Temperature Range: Minus 40 to plus 185 deg F (Minus 40 to plus 85 deg C).
4. Color: Black, except where used for color-coding.

C. UL ZODZ - UV-Stabilized Cable Ties: Fungus inert, designed for continuous exposure to exterior sunlight, self-extinguishing, one piece, self-locking, and Type 6/6 nylon.
1. Minimum Width: 3/16 inch.
2. Tensile Strength at 73 deg F (23 deg C) in accordance with ASTM D638: 12,000 psi.
3. Temperature Range: Minus 40 to plus 185 deg F (Minus 40 to plus 85 deg C).
4. Color: Black.

D. UL ZODZ - Plenum-Rated Cable Ties: Self-extinguishing, UV stabilized, one piece, and self-locking.
1. Minimum Width: 3/16 inch.
2. Tensile Strength at 73 deg F (23 deg C) in accordance with ASTM D638: 7000 psi.
3. UL 94 Flame Rating: 94V-0.
4. Temperature Range: Minus 50 to plus 284 deg F (Minus 46 to plus 140 deg C).
5. Color: Black.

PART 3 EXECUTION

3.1 PREPARATION

A. Self-Adhesive Identification Products: Before applying electrical identification products, clean substrates of substances that could impair bond, using materials and methods recommended by manufacturer of identification product.

3.2 SELECTION OF COLORS AND IDENTIFICATION MARKINGS

A. Comply with 29 CFR 1910.144 for color identification of hazards, and the following:
   1. Fire-protection and fire-alarm equipment, including raceways, must be finished, painted, or suitably marked safety red.
   2. Ceiling-mounted hangers, supports, cable trays, and raceways must be finished, painted, or suitably marked safety yellow where less than 7.7 ft (2.3 m) above finished floor.
B. Pipe and Conduit Labeling: Comply with ASME A13.1 and IEEE C2.
C. Color-Coding for Phase- and Voltage-Level Identification, 1000 V or Less: Use colors listed below for ungrounded service, feeder and branch-circuit conductors.
   1. Color must be factory applied or field applied for sizes larger than 6 AWG when permitted by authorities having jurisdiction.
   2. Colors for 208Y/120 V Circuits:
      a. Phase A: Black.
      b. Phase B: Red.
      c. Phase C: Blue.
   3. Colors for 240 V Circuits:
      a. Phase A: Black.
      b. Phase B: Red.
   4. Colors for 480Y/277 V Circuits:
      a. Phase A: Brown.
      b. Phase B: Orange.
      c. Phase C: Yellow.
   5. Color for Neutral (Grounded Conductor): White.
   6. Color for Equipment Ground: Bare copper or Green.
   7. Color for Isolated Ground: Green with two or more yellow stripes.
D. Color-Coding Raceways, Cable Trays, Junction Boxes, and Conductors for Intrinsically-Safe Circuits: Light blue. When used to identify intrinsically-safe circuits, Article 504 of NFPA 70 requires that the color light blue not be used for any other purpose.
E. Color-Coding Instructional Signs: Self-adhesive labels, including color code for grounded and ungrounded conductors.
F. Accessible Fittings for Raceways: Identify cover of junction and pull box of the following systems with wiring system legend and system voltage. System legends must be as follows:
   1. "EMERGENCY POWER."
   2. "POWER."
   3. "UPS."
   4. "COMMUNICATIONS."
G. Identify conductors, cables, and terminals in enclosures and at junctions, terminals, pull points, and locations of high visibility. Identify by system and circuit designation.
H. Locations of Underground Lines: Underground-line warning tape for power, lighting, communication, and control wiring and optical-fiber cable.
I. Vaults, Manholes, Handholes, and Pull and Junction Boxes, More Than 1000 V: For conductors in vaults, pull and junction boxes, manholes, and handholes, use nonmetallic preprinted tags colored and marked to indicate phase, and separate tag with circuit designation.
J. Concealed Raceways, Duct Banks, More Than 1000 V, within Buildings: Tape and stencil. Stencil legend "DANGER - CONCEALED HIGH-VOLTAGE WIRING" with 3 inch high, black letters on 20 inch centers.
   1. Locate identification at changes in direction, at penetrations of walls and floors, and at 10 ft (3 m) maximum intervals.
   2. Identify system voltage and system or service type with black letters on orange field.
   3. Apply floor marking tape to the following finished surfaces:
      a. Floor surface directly above conduits running beneath and within 12 inch of floor that is in contact with earth or is framed above unexcavated space.
      b. Wall surfaces directly external to raceways concealed within wall.
      c. Accessible surfaces of concrete envelope around raceways in vertical shafts, exposed in building, or concealed above suspended ceilings.

K. Accessible Raceways, Armored and Metal-Clad Cables, More Than 1000 V: Vinyl wraparound labels.
   1. Locate identification at changes in direction, at penetrations of walls and floors, at 50 ft (15 m) maximum intervals in straight runs, and at 25 ft (7.6 m) maximum intervals in congested areas.
   2. Identify system voltage and system or service type with black letters on orange field.
L. Vaults, Manholes, Handholes, and Pull and Junction Boxes, 1000 V or Less: For conductors in vaults, pull and junction boxes, manholes, and handholes, use vinyl wraparound labels to identify phase.
   1. Locate identification at changes in direction, at penetrations of walls and floors, at 50 ft (15 m) maximum intervals in straight runs, and at 25 ft (7.6 m) maximum intervals in congested areas.
   2. Identify system voltage and system or service type with black letters on orange field
M. Accessible Raceways and Metal-Clad Cables, 1000 V or Less, for Service, Feeder, and Branch Circuits, More Than 30A and 120V to Ground: Identify with self-adhesive raceway labels.
   1. Locate identification at changes in direction, at penetrations of walls and floors, at 50 ft (15 m) maximum intervals in straight runs, and at 25 ft (7.6 m) maximum intervals in congested areas.
   2. Identify system voltage and system or service type with black letters on orange field.
N. Control-Circuit Conductor Identification: For conductors and cables in pull and junction boxes, manholes, and handholes, use self-adhesive labels with conductor or cable designation, origin, and destination.
O. Control-Circuit Conductor Termination Identification: For identification at terminations, provide heat-shrink preprinted tubes with conductor designation.
P. Conductors to Be Extended in Future: Attach write-on tags to conductors and list source.
Q. Auxiliary Electrical Systems Conductor Identification: Marker tape that is uniform and consistent with system used by manufacturer for factory-installed connections.
R. Faceplates: Label individual faceplates with self-adhesive labels. Place label at top of faceplate. Each faceplate to be labeled with its individual, sequential designation, composed of the following, in the order listed:
   1. Wiring closet designation.
   2. Colon.
   3. Faceplate number.
S. Equipment Room Labeling:
   1. Racks, Frames, and Enclosures: Identify front and rear of each with self-adhesive labels containing equipment designation.
   2. Patch Panels: Label individual rows in each rack, starting at top and working down, with self-adhesive labels.
   3. Data Outlets: Label each outlet with a self-adhesive label indicating the following, in the order listed:
      a. Room number being served.
      b. Colon.
      c. Faceplate number.
T. Backbone Cables: Label each cable with a vinyl-wraparound label indicating the location of the far or other end of the backbone cable. Patch panel or punch down block where cable is terminated should be labeled identically.
U. Horizontal Cables: Label each cable with a vinyl-wraparound label indicating the following, in the order listed:
   1. Room number.
   2. Colon.
   3. Faceplate number.
V. Workspace Indication: Apply floor marking tape to finished surfaces. Show working clearances in direction of access to live parts. Workspace must comply with NFPA 70 and 29 CFR 1926.403 unless otherwise indicated. Do not install at flush-mounted panelboards and similar equipment in finished spaces.
W. Equipment Identification Labels:
   1. Black letters on white field.
   2. Indoor Equipment: Baked-enamel signs.
   3. Outdoor Equipment: Laminated acrylic or melamine sign.
   4. Equipment to Be Labeled:

a. Panelboards: Typewritten directory of circuits in location provided by panelboard manufacturer. Panelboard identification must be in form of engraved, laminated acrylic or melamine label.
b. Enclosures and electrical cabinets.
c. Communications cabinets.
d. Access doors and panels for concealed electrical items.
e. Switchgear.
f. Switchboards.
g. Transformers: Label that includes tag designation indicated on Drawings for transformer, feeder, and panelboards or equipment supplied by secondary.
h. Substations.
i. Emergency system boxes and enclosures.
j. Motor-control centers.
k. Enclosed switches.
l. Enclosed circuit breakers.
m. Enclosed controllers.
n. Variable-speed controllers.
o. Push-button stations.
p. Power-transfer equipment.
q. Contactors.
r. Remote-controlled switches, dimmer modules, and control devices.
s. Uninterruptible power supplies.
t. Battery-inverter units.
u. Battery racks.
v. Power-generating units.
w. Monitoring and control equipment.
x. Computer room air conditioners.
y. Fire-alarm and suppression equipment.
z. Egress points.

3.3 SELECTION OF SIGNS AND HAZARD MARKINGS

A. Comply with 29 CFR 1910.145 for danger, caution, warning, and safety instruction signs.
B. Signs, labels, and tags required for personnel safety must comply with the following standards:
1. Safety Colors: NEMA Z535.1.
2. Facility Safety Signs: NEMA Z535.2.
3. Safety Symbols: NEMA Z535.3.
4. Product Safety Signs and Labels: NEMA Z535.4.
5. Safety Tags and Barricade Tapes for Temporary Hazards: NEMA Z535.5.
C. Electrical Hazard Warnings:
1. Arc-Flash Hazard Warning: Self-adhesive labels. Comply with NFPA 70E requirements for arc-flash hazard warning labels.
2. Raceways and Cables Carrying Circuits at More Than 1000 V:
a. Black letters on orange field.
b. Legend: "DANGER - CONCEALED HIGH VOLTAGE WIRING."
3. Multiple Power Sources Warning Legend: "DANGER - ELECTRICAL SHOCK HAZARD - EQUIPMENT HAS MULTIPLE POWER SOURCES."
4. OSHA Workspace Clearance Warning Legend: "WARNING - OSHA REGULATION - AREA IN FRONT OF ELECTRICAL EQUIPMENT MUST BE KEPT CLEAR FOR 3 FEET MINIMUM."
D. Warning Labels for Indoor Cabinets, Boxes, and Enclosures for Power and Lighting: Baked-enamel warning signs.
1. Apply to exterior of door, cover, or other access.
2. For equipment with multiple power or control sources, apply to door or cover of equipment, including, but not limited to, the following:

a. Power-transfer switches.
b. Controls with external control power connections.
c. ???Insert items???.

E. Operating Instruction Signs: Baked-enamel warning signs.

F. Emergency Operating Instruction Signs: Baked-enamel warning signs with white legend on red background with minimum 3/8 inch high letters for emergency instructions at equipment used for power transfer, load shedding and emergency operations.

3.4 INSTALLATION

A. Install identification materials and devices at locations for most convenient viewing without interference with operation and maintenance of equipment. Install access doors or panels to provide view of identifying devices.

B. Thermal Movements: Allow for thermal movements from ambient and surface temperature changes typical for electrical equipment environments specified in Section 260011 "Facility Performance Requirements for Electrical."

C. Paint: Comply with requirements in painting Sections for paint materials and application requirements. Retain paint system applicable for surface material and location (exterior or interior).

D. Fasteners for Labels and Signs: Self-tapping, stainless steel screws or stainless steel machine screws with nuts and flat and lock washers.

E. Verify and coordinate identification names, abbreviations, colors, and other features with requirements in other Sections requiring identification applications, Drawings, Shop Drawings, manufacturer's wiring diagrams, and operation and maintenance manual. Use consistent designations throughout Project.

F. Install identifying devices before installing acoustical ceilings and similar concealment.

G. Verify identity of item before installing identification products.

H. Coordinate identification with Project Drawings, manufacturer's wiring diagrams, and operation and maintenance manual.

I. Apply identification devices to surfaces that require finish after completing finish work.

J. Install signs with approved legend to facilitate proper identification, operation, and maintenance of electrical systems and connected items.

K. System Identification for Raceways and Cables under 1000 V: Identification must completely encircle cable or conduit. Place identification of two-color markings in contact, side by side.
1. Secure tight to surface of conductor, cable, or raceway.

L. System Identification for Raceways and Cables over 1000 V: Identification must completely encircle cable or conduit. Place adjacent identification of two-color markings in contact, side by side.
1. Secure tight to surface of conductor, cable, or raceway.

M. Auxiliary Electrical Systems Conductor Identification: Identify field-installed alarm, control, and signal connections.

N. Emergency Operating Instruction Signs: Install instruction signs with white legend on red background with minimum 3/8 inch high letters for emergency instructions at equipment used for power transfer and load shedding.

O. Elevated Components: Increase sizes of labels, signs, and letters to those appropriate for viewing from floor.

P. Vinyl Wraparound Labels:
1. Secure tight to surface of raceway or cable at location with high visibility and accessibility.
2. Attach labels that are not self-adhesive type with clear vinyl tape, with adhesive appropriate to location and substrate.

Q. Snap-Around Labels: Secure tight to surface at location with high visibility and accessibility.

R. Self-Adhesive Wraparound Labels: Secure tight to surface at location with high visibility and accessibility.

S. Self-Adhesive Labels:
1. Install unique designation label that is consistent with wiring diagrams, schedules, and operation and maintenance manual.
2. Unless otherwise indicated, provide single line of text with 1/2 inch high letters on 1-1/2 inch high label; where two lines of text are required, use labels 2 inch high.

T. Snap-Around Color-Coding Bands: Secure tight to surface at location with high visibility and accessibility.

U. Heat-Shrink, Preprinted Tubes: Secure tight to surface at location with high visibility and accessibility.

V. Marker Tapes: Secure tight to surface at location with high visibility and accessibility.

W. Self-Adhesive Vinyl Tape: Secure tight to surface at location with high visibility and accessibility.

1. Field-Applied, Color-Coding Conductor Tape: Apply in half-lapped turns for minimum distance of 6 inch where splices or taps are made. Apply last two turns of tape with no tension to prevent possible unwinding.

X. Tape and Stencil: Comply with requirements in painting Sections for surface preparation and paint application.

Y. Floor Marking Tape: Apply stripes to finished surfaces following manufacturer's instructions.

Z. Underground Line Warning Tape:

1. During backfilling of trenches, install continuous underground-line warning tape directly above cable or raceway at 6 to 8 inch (150 to 200 mm) below finished grade. Use multiple tapes where width of multiple lines installed in common trench or concrete envelope exceeds 16 inch overall.
2. Limit use of underground-line warning tape to direct-buried cables.
3. Install underground-line warning tape for direct-buried cables and cables in raceways.

AA. Metal Tags:

1. Place in location with high visibility and accessibility.
2. Secure using UV-stabilized cable ties.

BB. Nonmetallic Preprinted Tags:

1. Place in location with high visibility and accessibility.
2. Secure using UV-stabilized cable ties.

CC. Write-on Tags:

1. Place in location with high visibility and accessibility.
2. Secure using general-purpose cable ties.

DD. Baked-Enamel Signs:

1. Attach signs that are not self-adhesive type with mechanical fasteners appropriate to location and substrate.
2. Unless otherwise indicated, provide single line of text with 1/2 inch high letters on minimum 1-1/2 inch high sign; where two lines of text are required, use signs minimum 2 inch high.

EE. Metal-Backed Butyrate Signs:

1. Attach signs that are not self-adhesive type with mechanical fasteners appropriate to location and substrate.
2. Unless otherwise indicated, provide single line of text with 1/2 inch high letters on 1-1/2 inch high sign; where two lines of text are required, use labels 2 inch high.

FF. Laminated Acrylic or Melamine Plastic Signs:

1. Attach signs that are not self-adhesive type with mechanical fasteners appropriate to location and substrate.
2. Unless otherwise indicated, provide single line of text with 1/2 inch high letters on 1-1/2 inch high sign; where two lines of text are required, use labels 2 inch high.

GG. Cable Ties: General purpose, for attaching tags, except as listed below:

1. Outdoors: UV-stabilized nylon.
2. In Spaces Handling Environmental Air: Plenum rated.

END OF SECTION

SECTION 260573 - POWER SYSTEM STUDIES

PART 1 GENERAL

1.1 SUMMARY

A. The Work of this Section Includes:
   1. Short-circuit study.
   2. Overcurrent protective device coordination study.
   3. Load-flow and voltage-drop study.
   4. Motor-starting study.
   5. Arc-flash hazard study.
   6. Digital-twin modeling.
B. Related Requirements:
   1. Section 260010 "Supplemental Requirements for Electrical" specifies additional requirements applicable to coordinating, scheduling, and sequencing of the Work specified in this Section.

1.2 ACTION SUBMITTALS

A. Product Data: For power system analysis software to be used for studies.
   1. Product Certificates: For power system study software applications, include certificate stating compliance with specified requirements, signed by software manufacturer.
B. Power System Study Reports:
   1. Submit reports after approval of system protective devices submittals. Submittals must be in digital form.
   2. Submit short-circuit study input data, including completed computer-program input data sheets.
   3. Submit coordination study input data, including completed computer-program input data sheets.
      a. Submit load-flow, voltage-drop, and motor-starting data with coordination study.
   4. Submit arc-flash study input data, including completed computer-program input data sheets.
   5. Submit study report for action prior to receiving final approval of distribution equipment submittals. If formal completion of studies will cause delay in equipment manufacturing, obtain approval from Architect for preliminary submittal of sufficient study data to ensure that selection of devices and associated characteristics is satisfactory.
   6. Submit revised one-line diagram, reflecting field investigation results and results of short-circuit study.
C. Data files for studies in format compatible with Owner's power system analysis software.
D. Digital-twin models.

1.3 QUALITY ASSURANCE

A. Submittals for power system studies must be signed and sealed by qualified electrical professional engineer responsible for their preparation.
B. Studies must be performed using commercially developed and distributed software designed specifically for power system analysis.
C. Software algorithms must comply with requirements of standards and guides specified in this Section.
D. Manual calculations are unacceptable.

PART 2 PRODUCTS

2.1 POWER SYSTEM ANALYSIS SOFTWARE

A. Standard Features:
   1. Power System Analysis:

a. Power-systems-analysis software applications must have analytical capability to calculate "mandatory," "very desirable," and "desirable" features as listed in IEEE 3002 series standards.
b. Computer software application must be capable of plotting and diagramming time-current-characteristic curves as part of its output. Computer software program must report device settings and ratings of overcurrent protective devices and must demonstrate selective coordination by computer-generated, time-current coordination plots.
c. Computer software application must be designed to perform arc-flash analysis or have function, component, or add-on module designed to perform arc-flash analysis.

2. Analysis Standards:
   a. Short-Circuit Current Analysis: In accordance with IEEE 3002.3.
   b. Device Coordination Analysis: In accordance with IEEE 3004.3 and IEEE 3004.5.
   c. Load-Flow Analysis: In accordance with IEEE 3002.2.
   d. Motor-Starting Analysis: In accordance with IEEE 3002.7.
   e. Harmonic Analysis: In accordance with IEEE 3002.8.
   f. Transient Stability Analysis: In accordance with IEEE P3002.9.
   g. Arc-Flash Hazard Analysis: In accordance with IEEE 1584.
3. Capable of printing arc-flash hazard warnings for equipment on polyester, weather- and UV-resistant, pressure-sensitive adhesive labels complying with NFPA 70E.
   a. Label must have orange header with wording, "WARNING, ARC-FLASH HAZARD," and must include the following information taken directly from arc-flash hazard study:
      1) Equipment designation.
      2) Nominal voltage.
      3) Protection boundaries.
         (a) Arc-flash boundary.
         (b) Restricted approach boundary.
         (c) Limited approach boundary.
      4) Arc-flash PPE category.
      5) Required minimum arc rating of PPE in Cal/cm squared.
      6) Available incident energy.
      7) Working distance.
      8) Engineering report number, revision number, and issue date.

B. Other Available Features Required by the Project:
   1. Simultaneous faults.
   2. Explicit negative sequence.
   3. Mutual coupling in zero sequence.
   4. Digital-Twin Model: Ability to create a cloud-based, digital-twin model for life-cycle operation and maintenance of the facility's electrical power system.

PART 3 EXECUTION

3.1 EXAMINATION

A. Collect and analyze data for power system studies.
   1. Verify completeness of data supplied in one-line diagram on Drawings. Call discrepancies to Architect's attention.
   2. For equipment included as Work on the Project, use characteristics submitted under provisions of action submittals and information submittals for the Project.
   3. For relocated equipment and equipment that is existing to remain, obtain required electrical distribution system data by field investigation and surveys, conducted by qualified technicians and engineers in accordance with NFPA 70E.
   4. Gather and tabulate required input data to support power system studies. Comply with requirements in Section 017839 "Project Record Documents" for recording circuit protective device characteristics. Record data on Record Document copy of one-line diagram. Comply with recommendations in IEEE 3002 series standards as to amount of detail that is required to be

acquired in field. Field data gathering must be by, or under supervision of, qualified electrical professional engineer. Data include, but are not limited to, the following:

a. Product data for the Project's overcurrent protective devices involved in overcurrent protective device coordination studies. Use equipment designation tags that are consistent with electrical distribution system diagrams, overcurrent protective device submittals, input and output data, and recommended device settings.
b. Electrical power utility impedance at service.
c. Power sources and ties.
d. Short-circuit current at each system bus (three phase and line to ground).
e. Full-load current of loads.
f. Voltage level at each bus.
g. For transformers, include kVA, primary and secondary voltages, connection type, impedance, X/R ratio, taps measured in percent, and phase shift.
h. For reactors, provide manufacturer and model designation, voltage rating, and impedance.
i. For circuit breakers and fuses, provide manufacturer and model designation. List type of breaker, type of trip and available range of settings, SCCR, current rating, and breaker settings.
j. Generator short-circuit current contribution data, including short-circuit reactance, rated kVA, rated voltage, and X/R ratio.
k. For relays, provide manufacturer and model designation, current transformer ratios, potential transformer ratios, and relay settings.
l. Maximum demands from service meters.
m. Busway manufacturer and model designation, current rating, impedance, lengths, and conductor material.
n. Motor horsepower and NEMA MG 1 code letter designation.
o. Low-voltage cable sizes, lengths, number, conductor material, and conduit material (magnetic or nonmagnetic).
p. Medium-voltage cable sizes, lengths, conductor material, cable construction, metallic shield performance parameters, and conduit material (magnetic or nonmagnetic).
q. Derating factors.

3.2 PREPARATION

A. Preparation of Data for Short-Circuit Study:
1. Verify completeness of data supplied on one-line diagram. Call discrepancies to Architect's attention.
2. For equipment included as Work on the Project, use characteristics submitted under provisions of action submittals and information submittals for the Project.
3. Prepare one-line diagram of modeled power system, showing the following:
a. Protective device designations and ampere ratings.
b. Conductor types, sizes, and lengths.
c. Transformer kVA and voltage ratings.
d. Motor and generator designations and kVA ratings.
e. Switchgear, switchboard, motor-control center, and panelboard designations and ratings.
f. Derating factors and environmental conditions.
g. Revisions to electrical equipment required by study.

B. Preparation of Data for Overcurrent Protective Device Coordination Study:
1. Prepare data sheets to supplement electrical distribution system one-line diagram, cross-referenced with tag numbers on diagram, indicating the following:
a. Special load considerations, including starting inrush currents and frequent starting and stopping.
b. Transformer characteristics, including primary protective device, magnetic inrush current, and overload capability.
c. Motor full-load current, locked rotor current, service factor, starting time, type of start, and thermal-damage curve.
d. Generator thermal-damage curve.

e. Ratings, types, and settings of utility company's overcurrent protective devices.
f. Special overcurrent protective device settings or types stipulated by utility company.
g. Time-current-characteristic curves of devices indicated to be coordinated.
h. Manufacturer, frame size, interrupting rating in amperes root mean square (rms) symmetrical, ampere or current sensor rating, long-time adjustment range, short-time adjustment range, and instantaneous adjustment range for circuit breakers.
i. Manufacturer and type, ampere-tap adjustment range, time-delay adjustment range, instantaneous attachment adjustment range, and current transformer ratio for overcurrent relays.
j. Switchgear, switchboards, motor-control centers, and panelboards ampacity, and SCCR in amperes rms symmetrical.
k. Identify series-rated interrupting devices for condition where available fault current is greater than interrupting rating of downstream equipment. Obtain device data details to allow verification that series application of these devices complies with NFPA 70 and UL 489 requirements.

2. Examine the Project's overcurrent protective device submittals for compliance with electrical distribution system coordination requirements and other conditions affecting performance of the Work. Devices to be coordinated are indicated on Drawings.
3. Proceed with coordination study only after relevant equipment submittals have been assembled. Overcurrent protective devices that have not been submitted and approved prior to coordination study may not be used in study.

C. Preparation of Data for Arc-Flash Hazard Study:
1. Assemble data from short-circuit study and overcurrent protective device coordination study.
2. Proceed with arc-flash study only after relevant equipment submittals have been assembled. Overcurrent protective devices that have not been submitted and approved prior to arc-flash study may not be used in study.

3.3 SHORT-CIRCUIT STUDY

A. Base study on device characteristics supplied by device manufacturer.
B. Extent of electrical power system to be studied is indicated on Drawings.
C. Begin short-circuit current analysis at service, extending down to system overcurrent protective devices as follows:
1. To normal system low-voltage load buses where fault current is 5 kA or less.
2. Exclude equipment supplied by single transformer smaller than 75 kVA.
D. Study electrical distribution system from normal and alternate power sources throughout electrical distribution system for the Project. Study cases of system-switching configurations and alternate operations that could result in maximum fault conditions.
E. Include AC fault-current decay from induction motors, synchronous motors, and asynchronous generators and apply to low- and medium-voltage, three-phase AC systems. Also account for fault-current DC decrement to address asymmetrical requirements of interrupting equipment.
F. Calculate short-circuit momentary and interrupting duties for three-phase bolted fault and single line-to-ground fault at equipment indicated on one-line diagram.
1. For grounded systems, provide bolted line-to-ground fault-current study for areas as defined for three-phase bolted fault short-circuit study.
G. Include in report identification of protective device applied outside its capacity.

3.4 OVERCURRENT PROTECTIVE DEVICE COORDINATION STUDY

A. Base study on device characteristics supplied by device manufacturer.
B. Extent of electrical power system to be studied is indicated on Drawings.
C. Begin analysis at service, extending down to system overcurrent protective devices as follows:
1. To normal system low-voltage load buses where fault current is 5 kA or less.
D. Study electrical distribution system from normal and alternate power sources throughout electrical distribution system for the Project. Study cases of system-switching configurations and alternate operations that could result in maximum fault conditions.
E. Transformer Primary Overcurrent Protective Devices:

1. Device must not operate in response to the following:
    a. Inrush current when first energized.
    b. Self-cooled, full-load current or forced-air-cooled, full-load current, whichever is specified for that transformer.
    c. Permissible transformer overloads in accordance with IEEE C57.96 if required by unusual loading or emergency conditions.
2. Device settings must protect transformers in accordance with IEEE C57.12.00, for fault currents.

F. Motor Protection:
1. Select protection for low-voltage motors in accordance with IEEE 3004.8 and NFPA 70.
2. Select protection for motors served at voltages more than 600 V in accordance with IEEE 620.

G. Conductor Protection: Protect cables against damage from fault currents in accordance with ICEA P-32-382, ICEA P-45-482, and protection recommendations in IEEE 3004.7. Demonstrate that equipment withstands maximum short-circuit current for time equivalent to tripping time of primary relay protection or total clearing time of fuse. To determine temperatures that damage insulation, use curves from cable manufacturers or from listed standards indicating conductor size and short-circuit current.

H. Generator Protection: Select protection in accordance with manufacturer's published instructions and IEEE C37.102.

I. Include AC fault-current decay from induction motors, synchronous motors, and asynchronous generators and apply to low- and medium-voltage, three-phase AC systems. Also account for fault-current DC decrement, to address asymmetrical requirements of interrupting equipment.

J. Include coordination of ground-fault protection devices.

K. Calculate short-circuit momentary and interrupting duties for three-phase bolted fault and single line-to-ground fault at equipment indicated on one-line diagram.
1. For grounded systems, provide bolted line-to-ground fault-current study for areas as defined for three-phase bolted fault short-circuit study.

L. Protective Device Evaluation:
1. Evaluate equipment and protective devices and compare to short-circuit ratings.
2. Adequacy of switchgear, motor-control centers, and panelboard bus bars to withstand short-circuit stresses.
3. Application of series-rated devices must be recertified, complying with requirements in NFPA 70.
4. Include in report identification of protective device applied outside its capacity.

3.5 ARC-FLASH HAZARD STUDY

A. Comply with NFPA 70E, including Annex D, for arc-flash hazard study.

B. Preparatory Studies: Obtain short-circuit study and overcurrent protective device coordination study results prior to starting arc-flash hazard study.

C. Calculate maximum and minimum contributions of fault-current size.
1. Maximum calculation must assume maximum contribution from utility and must assume motors to be operating under full-load conditions.
2. Calculate arc-flash energy at 85 percent of maximum short-circuit current in accordance with IEEE 1584 recommendations.
3. Calculate arc-flash energy with utility contribution at minimum and assume no motor contribution.

D. Calculate arc-flash protection boundary and incident energy at locations in electrical distribution system where personnel could perform work on energized parts.

E. Include medium- and low-voltage equipment locations, except nominal arc-flash hazard warning data may be provided for equipment fed from transformers rated below 240 V(ac), 2000 A, instead of documenting precise calculations.

F. Calculate limited, restricted, and prohibited approach boundaries for each location.

G. Incident energy calculations must consider accumulation of energy over time when performing arc-flash calculations on buses with multiple sources. Iterative calculations must account for changing current contributions, as sources are interrupted or decremented with time. Fault contribution from motors and generators must be decremented as follows:
1. Fault contribution from induction motors must not be considered beyond three to five cycles.
2. Fault contribution from synchronous motors and generators must be decayed to match actual decrement of each as closely as possible (for example, contributions from permanent magnet generators will typically decay from 10 to 3 p.u. after 10 cycles).

H. Arc-flash energy must generally be reported for maximum of line or load side of circuit breaker. However, arc-flash computation must be performed and reported for both line and load side of circuit breaker as follows:
   1. When circuit breaker is in separate enclosure.
   2. When line terminals of circuit breaker are separate from work location.

I. Base arc-flash calculations on actual overcurrent protective device clearing time. Cap maximum clearing time at two seconds based on IEEE 1584, Section B.1.2.

3.6 POWER SYSTEM STUDY REPORTS

A. Preparation of Power System Study Reports: Prepare and submit the following:
   1. Short-Circuit Study Report Contents:
      a. Executive summary of study findings.
      b. Study descriptions, purpose, basis, and scope. Include case descriptions, definition of terms, and guide for interpretation of results.
      c. One-line diagram of modeled power system, showing the following:
         1) Protective device designations and ampere ratings.
         2) Conductor types, sizes, and lengths.
         3) Transformer kVA and voltage ratings.
         4) Motor and generator designations and kVA ratings.
         5) Switchgear, switchboard, motor-control center, and panelboard designations and ratings.
         6) Derating factors and environmental conditions.
         7) Revisions to electrical equipment required by study.
      d. Comments and recommendations for system improvements or revisions in written document, separate from one-line diagram.
      e. Short-Circuit Study Input Data:
         1) One-line diagram of system being studied.
         2) Power sources available.
         3) Manufacturer, model, and interrupting rating of protective devices.
         4) Conductors.
         5) Transformer data.
      f. Protective Device Evaluation:
         1) Evaluate equipment and protective devices and compare to available short-circuit currents. Verify that equipment withstand ratings exceed available short-circuit current at equipment installation locations.
         2) Tabulations of circuit breaker, fuse, and other protective device ratings versus calculated short-circuit duties.
         3) For 600 V overcurrent protective devices, ensure that interrupting ratings are equal to or higher than calculated 1/2-cycle symmetrical fault current.
         4) For devices and equipment rated for asymmetrical fault current, apply multiplication factors listed in standards to 1/2-cycle symmetrical fault current.
         5) Verify adequacy of phase conductors at maximum three-phase bolted fault currents; verify adequacy of equipment grounding conductors and grounding electrode conductors at maximum ground-fault currents. Ensure that short-circuit withstand ratings are equal to or higher than calculated 1/2-cycle symmetrical fault current.
      g. Short-Circuit Study Output Reports:
         1) Low-Voltage Fault Report: Three-phase and unbalanced fault calculations, showing the following for each overcurrent device location:
            (a) Voltage.
            (b) Calculated fault-current magnitude and angle.
            (c) Fault-point X/R ratio.
            (d) Equivalent impedance.
         2) Momentary Duty Report: Three-phase and unbalanced fault calculations, showing the following for each overcurrent device location:
            (a) Voltage.
            (b) Calculated symmetrical fault-current magnitude and angle.
            (c) Fault-point X/R ratio.

(d) Calculated asymmetrical fault currents based on fault-point X/R ratio; based on calculated symmetrical value multiplied by 1.6; and based on calculated symmetrical value multiplied by 2.7.

3) Interrupting Duty Report: Three-phase and unbalanced fault calculations, showing the following for each overcurrent device location:

(a) Voltage.

(b) Calculated symmetrical fault-current magnitude and angle.

(c) Fault-point X/R ratio.

(d) No AC Decrement (NACD) ratio.

(e) Equivalent impedance.

(f) Multiplying factors for 2-, 3-, 5-, and 8-cycle circuit breakers rated on symmetrical basis.

(g) Multiplying factors for 2-, 3-, 5-, and 8-cycle circuit breakers rated on total basis.

2. Overcurrent Protection Device Coordination Study Report Contents:

a. Executive summary of study findings.

b. Study descriptions, purpose, basis, and scope. Include case descriptions, definition of terms, and guide for interpretation of results.

c. One-line diagram of modeled power system, showing the following:

1) Protective device designations and ampere ratings.

2) Conductor types, sizes, and lengths.

3) Transformer kVA and voltage ratings.

4) Motor and generator designations and kVA ratings.

5) Switchgear, switchboard, motor-control center, and panelboard designations.

6) Revisions to electrical equipment required by study.

d. Report recommended settings of protective devices, ready to be applied in field. Use manufacturer's data sheets for recording recommended setting of overcurrent protective devices when available.

1) Phase and Ground Relays:

(a) Device tag.

(b) Relay current transformer ratio and tap, time dial, and instantaneous pickup value.

(c) Recommendations on improved relaying systems, if applicable.

2) Circuit Breakers:

(a) Adjustable pickups and time delays (long time, short time, and ground).

(b) Adjustable time-current characteristic.

(c) Adjustable instantaneous pickup.

(d) Recommendations on improved trip systems, if applicable.

3) Fuses: Show current rating, voltage, and class.

e. Time-Current Coordination Curves: Determine settings of overcurrent protective devices to achieve selective coordination. Graphically illustrate that adequate time separation exists between devices installed in series, including power utility company's upstream devices. Prepare separate sets of curves for switching schemes and for emergency periods where power source is local generation. Show the following information:

1) Device tag and title, one-line diagram with legend identifying portion of system covered.

2) Terminate device characteristic curves at point reflecting maximum symmetrical or asymmetrical fault current to which device is exposed.

3) Identify device associated with each curve by manufacturer type, function, and, if applicable, tap, time delay, and instantaneous settings recommended.

4) Plot the following listed characteristic curves, as applicable:

(a) Power utility's overcurrent protective device.

(b) Medium-voltage equipment overcurrent relays.

(c) Medium- and low-voltage fuses including manufacturer's minimum melt, total clearing, tolerance, and damage bands.

(d) Low-voltage equipment circuit-breaker trip devices, including manufacturer's tolerance bands.

(e) Transformer full-load current, magnetizing inrush current, and ANSI through-fault protection curves.

(f) Cables and conductors damage curves.
(g) Ground-fault protective devices.
(h) Motor-starting characteristics and motor damage points.
(i) Generator short-circuit decrement curve and generator damage point.
(j) Largest feeder circuit breaker in each motor-control center and panelboard.

5) Maintain selectivity for tripping currents caused by overloads.
6) Provide adequate time margins between device characteristics such that selective operation is achieved.
7) Comments and recommendations for system improvements.

3. Arc-Flash Hazard Study Report Contents:
   a. Executive summary of study findings.
   b. Study descriptions, purpose, basis, and scope. Include case descriptions, definition of terms, and guide for interpretation of results.
   c. One-line diagram, showing the following:
      1) Protective device designations and ampere ratings.
      2) Conductor types, sizes, and lengths.
      3) Transformer kVA and voltage ratings, including derating factors and environmental conditions.
      4) Motor and generator designations and kVA ratings.
      5) Switchgear, switchboard, motor-control center, panelboard designations, and ratings.
   d. Short-circuit study output data.
   e. Overcurrent protective device coordination study report contents.
   f. Arc-Flash Study Output Reports:
      1) Interrupting Duty Report: Three-phase and unbalanced fault calculations, showing the following for each equipment location included in report:
         (a) Voltage.
         (b) Calculated symmetrical fault-current magnitude and angle.
         (c) Fault-point X/R ratio.
         (d) No AC Decrement (NACD) ratio.
         (e) Equivalent impedance.
         (f) Multiplying factors for 2-, 3-, 5-, and 8-cycle circuit breakers rated on symmetrical basis.
         (g) Multiplying factors for 2-, 3-, 5-, and 8-cycle circuit breakers rated on total basis.
   g. Incident Energy and Flash Protection Boundary Calculations:
      1) Arcing fault magnitude.
      2) Protective device clearing time.
      3) Duration of arc.
      4) Arc-flash boundary.
      5) Restricted approach boundary.
      6) Limited approach boundary.
      7) Working distance.
      8) Incident energy.
      9) Hazard risk category.
      10) Recommendations for arc-flash energy reduction.
   h. Fault study input data, case descriptions, and fault-current calculations including definition of terms and guide for interpretation of computer printout.

3.7 WARNING LABELING OF ARC-FLASH HAZARDS

A. Apply one arc-flash label on front cover of each section of equipment for each equipment included in study, including each piece of equipment listed below:
   1. Medium-voltage switchgear.
   2. Medium-voltage switches.
   3. Medium voltage transformers.
   4. Low-voltage switchgear.
   5. Switchboards.

6. Panelboards.
7. Motor-control centers.
8. Low voltage transformers.
9. Safety switches.
10. Control panels.

B. Base arc-flash label data on highest values calculated at each location.

C. Machine print warning labels with no handwritten or field-applied markings.

D. Install arc-flash warning labels under direct supervision and control of qualified electrical professional engineer.

E. Indicate on record Drawings location of equipment where personnel could be exposed to arc-flash hazard during their work.
1. Indicate arc-flash energy.
2. Indicate protection level required.

END OF SECTION

SECTION 260913 - ELECTRICAL POWER MONITORING

PART 1 GENERAL

1.1 REFERENCE STANDARDS

A. ANSI C12.20 - American National Standard for Electricity Meters - 0.1, 0.2, and 0.5 Accuracy Classes; 2022.
B. BICSI N1 - Installation Practices for Telecommunications and ICT Cabling and Related Cabling Infrastructure, 1st Edition; 2019.
C. BICSI TDMM - Telecommunications Distribution Methods Manual, 15th Edition; 2024.
D. IEC 60529 - Degrees of Protection Provided by Enclosures (IP Code); 1989 (Corrigendum 2019).
E. IEEE 802.3 - IEEE Standard for Ethernet; 2022 (Corrigendum 2024).
F. IEEE C57.13 - IEEE Standard Requirements for Instrument Transformers; 2016.
G. NFPA 70 - National Electrical Code; Most Recent Edition Adopted by Authority Having Jurisdiction, Including All Applicable Amendments and Supplements.
H. NRTL - Nationally Recognized Testing Laboratory; Current Edition.
I. UL 1283 - Standard for Electromagnetic Interference Filters; Current Edition, Including All Revisions.
J. UL 1449 - Standard for Surge Protective Devices; Current Edition, Including All Revisions.
K. UL 60950-1 - Information Technology Equipment – Safety – Part 1: General Requirements; Current Edition, Including All Revisions.
L. UL 61010-1 - Safety Requirements for Electrical Equipment for Measurement, Control, and Laboratory Use - Part 1: General Requirements; Current Edition, Including All Revisions.

1.2 SUMMARY

A. Section includes equipment and systems used to monitor and control electrical consumption:
   1. Multifunction energy meters.
   2. Power meters.
   3. Circuit meters and monitors.
   4. PC operating system software.
   5. Network configuration software.
   6. Monitoring and control of power distribution equipment.
   7. System operator interfaces.
   8. Desktop workstations.
   9. Raceways and boxes.
   10. Wires and cables.
   11. Surge protection devices.
B. Related Requirements:
   1. Section 260010 "Supplemental Requirements for Electrical" for additional abbreviations, definitions, submittals, qualifications, testing agencies, and other Project requirements applicable to Work specified in this Section.
   2. Section 260011 "Facility Performance Requirements for Electrical" for seismic-load, wind-load, acoustical, and other field conditions applicable to Work specified in this Section.
   3. Section 230923.13 "Energy Meters" for electricity meters for HVAC equipment.
   4. Section 262713 "Electricity Metering" for equipment to meter electricity consumption and demand for tenant submetering.

1.3 ACTION SUBMITTALS

A. Product Data: For each type of product.
B. Shop Drawings: For power monitoring and control equipment.
   1. Include plans, elevations, sections, and attachment details.
   2. Include details of equipment assemblies. Indicate dimensions, method of field assembly, components, and location and size of each field connection.

a. Attach copies of approved Product Data submittals for products (such as switchboards, switchgear, and motor-control centers) that describe the following:
   1) Location of the meters and gateways, and routing of the connecting wiring.
   2) Details of power monitoring and control features to illustrate coordination among related equipment and power monitoring and control.

3. Block Diagram: Show interconnections between components specified in this Section and devices furnished with power distribution system components. Indicate data communication paths and identify networks, data buses, data gateways, concentrators, and other devices to be used. Describe characteristics of network and other data communication lines.
4. Include diagrams for power, signal, and control wiring.
5. Surge Suppressors: Data for each device used and where applied.

1.4 INFORMATIONAL SUBMITTALS

A. Field quality-control reports.
B. Design Data:
   1. Manufacturer's system installation and setup guides, with data forms to plan and record options and setup decisions.
      a. Project Record Drawings of as-built versions of submittal Shop Drawings provided in electronic PDF format on compact disk or portable storage device with a USB interface.
      b. Testing and commissioning reports and checklists of completed final versions of reports, checklists, and trend logs.
      c. As-built versions of submittal Product Data.
      d. Names, addresses, e-mail addresses, and 24-hour telephone numbers of Installer and service representatives for the system and products.
      e. Operator's manual with procedures for operating control systems including logging on and off, handling alarms, producing point reports, trending data, overriding computer control, and changing set points and variables.
      f. Programming manuals with description of programming language and syntax, of statements for algorithms and calculations used, of point database creation and modification, of program creation and modification, and of editor use.
      g. Engineering, installation, and maintenance manuals that explain how to do the following:
         1) Design and install new points, panels, and other hardware.
         2) Perform preventive maintenance and calibration.
         3) Debug hardware problems.
         4) Repair or replace hardware.
      h. Documentation of programs created using custom programming language including set points, tuning parameters, and object database.
      i. Backup copy of graphic files, programs, and database on compact disk or portable storage device with a USB interface.
      j. Complete original-issue documentation, installation, and maintenance information for furnished third-party hardware including computer equipment and sensors.
      k. Complete original-issue copies of furnished software, including operating systems, custom programming language, workstation software, and graphics software on compact disk or portable storage device with a USB interface.
      l. Recommended preventive maintenance procedures for system components, including schedule of tasks such as inspection, cleaning, and calibration; time between tasks; and task descriptions.
      m. Owner training materials.

1.5 COORDINATION

A. Coordinate features of distribution equipment and power monitoring and control components to form an integrated interconnection of compatible components.
   1. Match components and interconnections for optimum performance of specified functions.
B. Coordinate Work of this Section with those in Sections specifying distribution components that are monitored or controlled by power monitoring and control equipment.

PART 2 PRODUCTS

2.1 SYSTEM DESCRIPTION

A. Microprocessor-based monitoring and control of electrical power distribution system(s) that includes the following:
   1. Electrical meters that monitor, control, and connect to the data transmission network.
   2. LAN: High-speed, multi-access, open, nonproprietary, industry-standard communication protocols.
   3. Include PC-based workstation, with its operating system and application software, connected to data transmission network.
B. Electrical Components, Devices, and Accessories: Listed and labeled in accordance with UL 61010-1 and marked for intended location and application.

2.2 PERFORMANCE REQUIREMENTS

A. Surge Protection: For external wiring of each conductor entry connection to components to protect components from voltage surges originating external to equipment housing and entering through power, communication, signal, control, or sensing leads.
   1. Minimum Protection for Power Lines 120 V and More: SPDs complying with UL 1449, listed and labeled for intended use by an NRTL acceptable to authorities having jurisdiction.
   2. Minimum Protection for Communication, Signal, Control, and Low-Voltage Power Lines: Comply with requirements as recommended by manufacturer for type of line being protected.
B. Addressable Devices: Transmitters and receivers must communicate unique device identification and status reports to monitoring and control clients.
C. Interface with DDC System for HVAC: Provide factory-installed hardware and software to enable the DDC system for HVAC to monitor, display, and record data for use in processing reports.
   1. Hardwired Monitoring Points: Electrical power demand (kilowatts), electrical power consumption (kilowatt-hours), power factor, frequency, amperes and harmonics.
   2. ASHRAE 135 (BACnet) communication interface with the DDC system for HVAC must enable the DDC system for HVAC operator to remotely monitor meter information from a DDC system for HVAC operator workstation. Control features and monitoring points displayed locally at metering panel must be available through the DDC system for HVAC.
D. Backup Power Source:
   1. Electrical power distribution equipment served by a backup power source for controls must have associated power monitoring and control system products that monitor and control such systems and equipment also served from a backup power source.

2.3 MULTIFUNCTION ENERGY METERS

A. Multifunction Energy Meter: Separately mounted, modular, permanently installed, solid-state, digital I/O instrument for power and energy metering and monitoring; complying with UL 61010-1.
   1. Capable of metering four-wire wye, three-wire wye, three-wire delta, and single-phase power systems.
   2. Equipped with security lock to protect revenue related metering from unauthorized and accidental changes.
B. Comply with IEC 60529 degree of protection code of IP65 for the front of the meter, and code of IP30 for the body.
C. Overvoltage: Comply with UL 61010-1 overvoltage withstand rating for CAT III.
D. Accuracy:
   1. Comply with ANSI C12.20, Class 0.5.
   2. Neutral Current Measurement: Not more than 0.65 percent.
   3. Power Factor: 1.0 percent.
   4. Frequency: 0.1 percent.
   5. THD: 1.0 percent.
   6. Waveform Sampling: 64 per cycle.
E. Data Link:
   1. BACNET

F. Meter Physical Characteristics:
   1. Display: Backlit LCD with antiglare and scratch-resistant lens.
   2. Display of Metered Values:
      a. One screen to show at least three user-selected values displayed at the same time. Selections available to display must include the following:
         1) Meters.
         2) Measurements.
         3) THD.
         4) Energy.
         5) Demand.
         6) Minimum and maximum values.
         7) Power demand.

G. Sampling Rate: Continuously sample and record voltage and current at a rate not less than 64 samples per cycle, simultaneously on voltage and current channels of the meter.

H. Meters:
   1. Instantaneous, RMS:
      a. Current: Each phase, neutral and three-phase average.
      b. Voltage: L-L each phase, L-L three-phase average, L-N each phase, and L-N three-phase average.
      c. Active Power (kW): Each phase and three-phase total.
      d. Reactive Power (kVAR): Each phase and three-phase total.
      e. Apparent Power (kVA): Each phase and three-phase total.
      f. Power Factor: Each phase and three-phase total.
   2. Energy:
      a. Active Energy (kWh): Three-phase total.
   3. Demand, Derived from Instantaneous RMS Meters:
      a. Current: Present and maximum.
      b. Active: Present and maximum.
      c. Reactive: Present and maximum.
      d. Apparent: Present and maximum.
   4. Power Quality Measurements:
      a. THD: Current and voltage from measurements simultaneously from the same cycle, as can be calculated from the specified sampling rate.

I. I/O: Two optically isolated digital outputs for KY pulsing or control. Output signal characteristics must be 150 mA at 200 V.
   1. KY Pulse: Generate standard KY pulses for a user-defined increment of metered active energy as follows:
      a. User-defined pulse output, associated with kWh.
      b. User-defined pulse output, associated with kVARh.

J. Capacities and Characteristics:
   1. Power Supply: 120 V(ac), 60 Hz.
   2. Circuit Connections:
      a. Voltage: Measurement autoranging, 60 to 400 V(ac) L-N. Connect to instrument grade potential transformers secondary at 120 V. Meter impedance must be 2 megohm L-L or greater. Overload Tolerance: 1500 V(ac), RMS, continuously.
      b. Current: Connect to instrument grade current transformer with a metering range of 5 mA to 6 A. Overcurrent tolerance of the instrument must be 10 A continuous, 50 A for 10 seconds once per hour, and 120 A for one second per hour.
      c. Frequency: 45 to 65 Hz.
      d. Time: Input from a GPS receiver to synchronize the internal clock of the instrument and to time-synchronize this instrument with the network to a deviation of not greater than 1 ms.

2.4 PC OPERATING SYSTEM SOFTWARE

A. Description: System software must monitor, analyze, display, control, and save the parameters and features available at the connected meter.

B. Software: Configured to run on a portable laptop computer, a single PC, or a tablet computer, with capability for accessing a single meter at a time, at the location of the meter. System is not connected to LAN.

C. Minimum Requirements:

1. Real-time multitasking and multiuser 64-bit operating system that allows execution of multiple real-time programs and custom program development.
2. Operating system must be capable of operating Microsoft Windows applications.
3. Scheduling software must schedule centrally based time and event, temporary, and exception day programs.

2.5 NETWORK CONFIGURATION SOFTWARE

A. Network Management Graphical Interface Features:

1. Add and remove devices in the power monitoring and control network.
2. Application for naming devices based on a user-defined naming scheme.
3. Add and remove I/O servers in the power monitoring and control network.
4. Edit communication properties for devices including timeouts and delays.
5. Display mandatory fields when adding a new device.
6. Allow to manually connect and disconnect serial, Ethernet, modem, and Ethernet gateway sites.
7. Enable and disable devices and sites in the power monitoring and control network without interruption to other devices or sites.
8. Pool modem resources so that the software uses any available modem.
9. Monitor the following diagnostics:
   a. Communication request/response and error rates, and timeouts.
   b. Log acquisition services.

B. Web Reporter: Allow viewing historical data in preformatted report templates via a web browser.

1. Features:
   a. User-configurable report generator to trigger on event, based on a schedule, or manual initiation.
   b. Format reports in HTML, PDF, TIF, Excel, XML, or user-selected printer, or network folder.
   c. Distribution of reports via email.
2. Report on power and demand profiles.
3. Power quality report with CBEMA evaluation.
4. EN 50160 compliance report.
5. 100-ms PQ report.
6. Energy over Period Report:
   a. User-defined rollup interval by day, week, month, or year.
   b. Compare daily energy to the following:
      1) Previous day.
      2) Same day, previous week.
      3) Same day, previous month.
      4) User-defined specific day.
   c. Compare weekly energy to the following:
      1) Previous week.
      2) Same week from previous month.
      3) Same week from previous year.
      4) User-defined specific week.
   d. Compare monthly energy to the following:
      1) Previous month.
      2) Same month from previous year.
      3) User-defined specific month.
   e. Compare annual energy to the following:

1) Previous year.
2) User-defined specific year.

7. Energy by daily period report for the user-defined periods. Aggregate consumption of the periods by the day, week, and year.
8. Tabular Report: Show values for multiple measurements and measurements from multiple devices in tabular format.
9. System Configuration Report:
   a. Device name.
   b. Device type.
   c. Device address.
   d. Connection status.
   e. Device protocol.
   f. Device description.
10. Each default report must include the following:
    a. Summary aggregation of data from the selected devices.
    b. Individual device information.
    c. Raw data.
11. The reporting tool must provide a graphical interface to create and manage multiple Time of Use schedules:
    a. Tariffs including energy cost rates per kWh, kVARh, and kVAh, and demand charges per kW, kVAR, and kVA.
    b. Off-peak and on-peak times.

2.6 MONITORING AND CONTROL OF POWER DISTRIBUTION EQUIPMENT

A. Power Distribution Equipment: Web-enabled, direct connected to the LAN or intranet.
B. Instrument Transformers: Comply with IEEE C57.13.
   1. Potential Transformers: Secondary voltage rating of 120 V and NEMA C12.11 accuracy class of 0.3 with burdens of W, X, and Y.
   2. Current Transformers: Burden and accuracy class suitable for connected relays, meters, and instruments.
C. Ethernet Connectivity:
   1. Serial communications network must be wired to an Ethernet server in the incoming section of the equipment. Hardware and cabling required for the connection to the network must be included within the power distribution equipment.
   2. Serial communications devices within the equipment must be factory addressed and tested to verify reliable communications to the equipment's Ethernet Server.
D. Ethernet Gateways:
   1. User configurable; complying with UL 60950-1, and IEEE 802.3, Class 3 PoE.
   2. Include provisions to set initial Ethernet parameters via a local operator interface, or standard (8PSJ) Ethernet port, that is accessible from the front of the equipment. Initial setup must be limited to basic Ethernet addressing parameters, as assigned by Owner.
   3. Common Gateway Features:
      a. User configurable, with secure password-protected login process.
      b. Include communications diagnostic information for serial and Ethernet ports as well as internal health status and memory management information through embedded HTML web pages for viewing using a standard web browser.
      c. Allow firmware upgrades through the communications port.
   4. Include a "Quick-Start" guide with the equipment to describe the commissioning process for setting the equipment's Ethernet network address and for ensuring trouble-free data access from any PC on the network, using a standard web browser.
   5. Implement a common user interface ("look and feel") across different styles of power equipment.
E. Distribution Equipment Monitoring:
   1. Main menu and summary pages, factory configured, to display data for each communicating device within the power equipment lineup.
   2. Display Data:

a. Circuit summary page to display circuit name, three-phase average RMS current, real power (kW), power factor, and breaker status (if applicable).
b. Load current summary page to display circuit name, and phase a, b, and c RMS current values.
c. Demand current summary page to display circuit name, and phase a, b, and c average demand current values.
d. Power summary page to display circuit name, present demand power (kW), peak demand power (kW), and recorded time and date.
e. Energy summary page to display circuit name, real energy (kWh), reactive energy (kVARh), and time/date of last reset.
f. For unit substations equipped with dry-type transformer(s) and microbased temperature controller(s), the circuit summary web page listed above must be augmented with transformer coil temperatures, phase a, b and c current values, and cooling fan status (on/off).
g. For motor-control centers, the circuit summary web page must be tailored specifically for this application, to display circuit name, three-phase average RMS current, thermal capacity (percentage), drive output frequency (in Hertz, where applicable), and contactor status.

2.7 SYSTEM OPERATOR INTERFACES

A. Operator means of system access must be through the following:
1. Desktop workstation with hardwired connection through LAN port.
2. Remote connection using outside of system PC, tablet, or phone using an internet portal.

2.8 DESKTOP WORKSTATIONS

A. Performance Requirements:
1. Performance requirements may dictate equipment exceeding minimum requirements indicated.
2. Capable of running Microsoft Windows.
3. ENERGY STAR compliant.

B. Personal Computer:
1. Minimum Processor Speed: Core i7.
2. RAM:
a. Capacity: 8 GB.
b. Speed and Type: 1333MHz.
3. Primary Hard Drive:
a. Media: Solid state.
b. Number of Hard Drives: One.
4. Video Card:
a. Capable of supporting three monitors.
b. Resolution: 1920 by 1200 pixels minimum for each monitor.
5. Sound Card: High-resolution 16-bit stereo digital audio recording and playback with user-selectable sample rates up to 48,000 Hz.
6. Network Interface Card: Include card with connection, as applicable.
a. 10-100-1000 base TX Ethernet with RJ45 connector port.
7. Wireless Ethernet, 802.11 a/b/g/n.
8. Optical Modem: Full duplex link for connection to optical fiber cable provided.
9. I/O Ports:
a. Two USB 3.0 ports on front panel, six on back panel, and three internal on motherboard.
b. One 8PSJ.
c. One stereo line-in and line-out on back panel.
d. One microphone and headphone connector on front panel.
e. One IEEE 1394 on front and back panel with PCI-e card.
f. One ESATA port on back panel.
10. Battery: Life of at least three years to maintain system clock/calendar and ROM, as a minimum.

C. Keyboard:
   1. 101-key enhanced keyboard.
   2. Full upper- and lowercase ASCII keyset, numeric keypad, dedicated cursor control keypad, and 12 programmable function keys.
D. Pointing Device:
   1. Either a two- or three-button mouse.
E. Flat Panel Display Monitor:
   1. Color display with 50 diagonal viewable area.
   2. Aspect Ratio: 16 to 9.
   3. Resolution: 1920 by 1080 pixels at 60 Hz with pixel size of 0.277 mm or smaller.
   4. Digital input signal.
   5. ENERGY STAR compliant.
   6. Antiglare display.
F. Speakers: Two, with individual controls for volume, bass, and treble.
G. I/O Cabling: Include applicable cabling to connect I/O devices.
H. Software:
   1. Factory-installed operating system.

2.9 RACEWAYS AND BOXES

A. Comply with requirements in Section 260533.13 "Conduits for Electrical Systems" for electrical power wiring and NFPA 70 Class 1 remote-control and signaling circuits.
B. Comply with requirements in Section 270528 "Pathways for Communications Systems" for control wiring, and NFPA 70 Class 2 remote-control and signaling circuits.

2.10 WIRES AND CABLES

A. Electrical Power Wiring: Comply with requirements in Section 260519 "Low-Voltage Electrical Power Conductors and Cables."
   1. Copper conductors are Type THHN/THWN-2.
B. Control Wiring:
   1. Copper: Comply with requirements in Section 260523 "Control-Voltage Electrical Power Cables."
   2. Optical Fiber: Comply with requirements in Section 271323 "Communications Optical Fiber Backbone Cabling" and 271523 "Communications Optical Fiber Horizontal Cabling."
C. Optical-Fiber Cable: Multimode, 50/125-micrometer OM3, six-fiber, nonconductive, tight-buffer, optical-fiber cable, with aqua jacket.
D. Balanced Twisted-Pair Cable: 100 ohm, four-pair balanced twisted-pair cable, Category 6.
E. Control-Voltage Cable: Multiple conductor, color-coded, No. 20 AWG copper, minimum.
   1. Sheath: PVC; except in plenum-type spaces, use sheath listed for plenums.
   2. Ordinary Switching Circuits: Three conductors unless otherwise indicated.
   3. Switching Circuits with Pilot Lights or Locator Feature: Five conductors unless otherwise indicated.

2.11 SURGE PROTECTION DEVICES

A. SPDs: Comply with UL 1449, Type 1.
   1. Include LED indicator lights for power and protection status.
   2. Internal thermal protection that disconnects the SPD before damaging internal suppressor components.
   3. Include Form-C contacts rated at 5 A and 250 V(ac), one normally open and one normally closed, for remote monitoring of protection status. Contacts must reverse on failure of surge diversion module or on opening of current-limiting device. Coordinate with building power monitoring and control system.
B. Peak Surge Current Rating: The minimum single-pulse surge current withstand rating per phase must not be less than 100 kA. The peak surge current rating must be the arithmetic sum of the ratings of the individual metal-oxide varistors in a given mode.
C. Comply with UL 1283.

D. Protection modes and UL 1449 SPD for grounded wye circuits with 480Y/277 V, three-phase, four-wire circuits must not exceed the following:
   1. L-N: 1200 V for 480Y/277 V
   2. L-G: 1200 V for 480Y/277 V.
   3. N-G: 1200 V for 480Y/277 V.
   4. L-L: 2000 V for 480Y/277 V.
E. Protection modes and UL 1449 SPD for 240/120 V, single-phase, three-wire circuits must not exceed the following:
   1. L-N: 700 V.
   2. L-G: 700 V.
   3. N-G: 700 V.
   4. L-L: 1200 V.
F. SCCR: Equal or exceed 100 kA.
G. Nominal Rating: 20 kA.
H. Indoor Enclosures: NEMA 250, Type 1.
I. Outdoor Enclosures: NEMA 250, Type 3R.

PART 3 EXECUTION

3.1 POWER MONITORING AND CONTROL SYSTEM INSTALLATION

A. Wiring Method: Install cables in raceways and cable trays except within consoles, cabinets, desks, and counters. Conceal raceway and cables except in unfinished spaces.
B. Wiring within Enclosures: Bundle, lace, and train conductors to terminal points with no excess and without exceeding manufacturer's limitations on bending radii. Install lacing bars and distribution spools.
C. Wiring and Cabling Installation:
   1. Comply with Section 260519 "Low-Voltage Electrical Power Conductors and Cables" for electrical power wiring.
   2. Comply with Section 260523 "Control-Voltage Electrical Power Cables" for control wiring.
D. Raceways Installation:
   1. Comply with Section 260533.13 "Conduits for Electrical Systems" for electrical power wiring and NFPA 70 Class 1 remote-control and signaling circuits.
   2. Comply with Section 270528 "Pathways for Communications Systems" for control wiring, and NFPA 70 Class 2 remote-control and signaling circuits.
E. Identification Installation:
   1. Comply with Section 260519 "Low-Voltage Electrical Power Conductors and Cables" for electrical power wiring.
   2. Comply with Section 271513 "Communications Copper Horizontal Cabling" for identification products and cable management system requirements for UTP and control-voltage cable.
   3. Comply with Section 271523 "Communications Optical Fiber Horizontal Cabling" for identification products and cable management system requirements for optical-fiber cable.

3.2 INSTALLATION OF WORKSTATIONS

A. Desktop Workstations Installation:
   1. Install workstation(s) at location(s) directed by Owner.
   2. Install multiple-receptacle power strip with cord for use in connecting multiple workstation components to a single, duplex electrical power receptacle.
   3. Power each workstation through a UPS unit. Locate UPS adjacent to workstation.
   4. Install software on workstation(s) and verify that software functions properly.
   5. Develop Project-specific graphics, trends, reports, logs, and historical database.
B. Graphics Application:
   1. Use system schematics indicated as starting point to create graphics.
   2. Develop Project-specific library of symbols for representing system equipment and products.

3. Incorporate digital images of Project-completed installation into graphics where beneficial to enhance effect.
4. Submit sketch of graphic layout with description of text for each graphic for Owner's and Architect's review before creating graphic using graphics software.
5. Seek Owner input in graphics development once using graphics software.
6. Final editing must be done on-site with Owner's review and feedback.
7. Refine graphics as necessary for Owner acceptance.
8. On receiving Owner acceptance, print a hard copy to include in operation and maintenance manual. Prepare a scanned copy PDF file of each graphic and include with softcopy of the system operation and maintenance manual.

3.3 NETWORK NAMING AND NUMBERING

A. Coordinate with Owner and provide unique naming and addressing for networks and devices.

3.4 GROUNDING

A. For data communication wiring, comply with BICSI N1.
B. For control-voltage wiring and cabling, comply with requirements in Section 260526 "Grounding and Bonding for Electrical Systems."

3.5 FIELD QUALITY CONTROL

A. Field tests and inspections must be witnessed by authorities having jurisdiction.
B. Tests and Inspections:
1. Test and adjust controls and safeties. Replace damaged and malfunctioning controls and equipment.
2. Visually inspect balanced twisted-pair cabling and optical-fiber cable jacket materials for UL or third-party certification markings. Inspect cabling terminations to confirm color-coding for pin assignments, and inspect cabling connections to confirm compliance with TIA-568-C.1.
3. Visually inspect cable placement, cable termination, grounding and bonding, equipment and patch cords, and labeling of components.
4. Test balanced twisted-pair cabling for direct-current loop resistance, shorts, opens, intermittent faults, and polarity between conductors. Test operation of shorting bars in connection blocks. Test cables after termination, but not after cross-connection.
a. Test instruments must meet or exceed applicable requirements in TIA-568-C.2. Perform tests with a tester that complies with performance requirements in its "Test Instruments (Normative)" Annex, complying with measurement accuracy specified in its "Measurement Accuracy (Informative)" Annex. Use only test cords and adapters that are qualified by test equipment manufacturer for channel or link test configuration.
b. Document data for each measurement. Print data for submittals in a summary report that is formatted using Table 10.1 inch BICSI TDMM as a guide, or transfer the data from the instrument to the computer, save as text files, print, and submit.
5. Optical-Fiber Cable Tests:
a. Test instruments must meet or exceed applicable requirements in TIA-568-C.0. Use only test cords and adapters that are qualified by test equipment manufacturer for channel or link test configuration.
b. Link End-to-End Attenuation Tests:
1) Multimode Link Measurements: Test at 850 or 1300 nm in one direction according to IEC 61280-4-1.
2) Attenuation test results for links must be less than 2.0 dB.
c. Document data for each measurement. Print data for submittals in a summary report that is formatted using Table 10.1 inch BICSI TDMM as a guide, or transfer the data from the instrument to the computer, save as text files, print, and submit.
6. Power Monitoring and Control System Tests.
a. Test Analog Signals:
1) Check analog voltage signals using a precision voltage meter at zero, 50, and 100 percent.

2) Check analog current signals using a precision current meter at zero, 50, and 100 percent.
3) Check resistance signals for temperature sensors at zero, 50, and 100 percent of operating span using a precision-resistant source.

b. Test Digital Signals:
1) Check digital signals using a jumper wire.
2) Check digital signals using an ohmmeter to test for contact making or breaking.

c. I/O Control Loop Tests:
1) Test every I/O point to verify that safety and operating control set points are as indicated and as required to operate controlled system safely and at optimum performance.
2) Test every I/O point throughout its full operating range.
3) Test every control loop to verify that operation is stable and accurate.
4) Adjust control loop proportional, integral, and derivative settings to achieve optimum performance while complying with performance requirements indicated. Document testing of each control loop's precision and stability via trend logs.
5) Test and adjust every control loop for proper operation according to sequence of operation.
6) Test software and hardware interlocks for proper operation.
7) Operate each analog point at the following:
(a) Upper quarter of range.
(b) Lower quarter of range.
(c) At midpoint of range.
8) Exercise each binary point.
9) For every I/O point in the system, read and record each value at operator workstation, at controller, and at field instrument simultaneously. Value displayed at operator workstation and at field instrument must match.
10) Prepare and submit a report documenting results for each I/O point in the system, and include in each I/O point a description of corrective measures and adjustments made to achieve desire results.

C. Nonconforming Work:
1. Wiring and cabling will be considered defective if they do not pass tests and inspections.

D. Prepare test and inspection reports.

3.6 FINAL REVIEW

A. Submit written request to Architect and Construction Manager when the power monitoring and control system is ready for final review. Written request must state the following:
1. The system has been thoroughly inspected for compliance with Contract Documents and found to be in full compliance.
2. The system has been calibrated, adjusted, and tested and found to comply with requirements of operational stability, accuracy, speed, and other performance requirements indicated.
3. The system monitoring and control of electrical distribution systems results in operation according to sequences of operation indicated.
4. The system is complete and ready for final review.

B. Review by Architect and Construction Manager will be made after receipt of written request. A field report must be issued to document observations and deficiencies.

C. Take prompt action to remedy deficiencies indicated in field report and submit a second written request when deficiencies have been corrected. Repeat process until no deficiencies are reported.

D. Final review must include a demonstration to parties participating in final review.

E. Beginning at Substantial Completion, maintenance service must include three months' full maintenance by manufacturer's authorized service representative. Include quarterly preventive maintenance, repair or replacement of defective components, cleaning, and adjusting as required for proper system operation. Parts and supplies must be manufacturer's authorized replacement parts and supplies.

3.7 SOFTWARE SERVICE AGREEMENT

A. Technical Support: Beginning at Substantial Completion, service agreement must include software support for two years.

B. Upgrade Service: At Substantial Completion, update software to latest version. Install and program software upgrades that become available within two years from date of Substantial Completion. Upgrading software must include operating system and new or revised licenses for using software.

1. Upgrade Notice: At least 30 days to allow Owner to schedule and access the system and to upgrade computer equipment if necessary.

3.8 TRAINING

A. On-Site Training:

1. Owner will provide conditioned classroom or workspace with ample desks or tables, chairs, power, and data connectivity for instructor and each attendee.
2. Instructor must provide training materials, projector, and other audiovisual equipment used in training.
3. Provide as much of training located on-site as deemed feasible and practical by Owner.
4. On-site training must include regular walk-through tours, as required, to observe each unique product type installed with hands-on review of operation, calibration, and service requirements.
5. The operator workstation provided with the system must be used in training. If operator workstation is not indicated, provide a temporary workstation to convey training content.

B. Off-Site Training:

1. Provide conditioned training rooms and workspace with ample tables, chairs, power, and data connectivity for each attendee.
2. Provide capability to remotely access to Project monitoring and control system for use in training.
3. Provide a workstation for use by each attendee.

END OF SECTION

SECTION 260923 - LIGHTING CONTROL DEVICES

PART 1 GENERAL

1.1 SUMMARY

A. Section Includes:
1. Electronic time switches.
2. Electromechanical dial-time switches.
3. Outdoor photoelectric switches, solid state, flexible mounting.
4. Outdoor photoelectric switches, low voltage.
5. Indoor occupancy and vacancy sensors.
6. Switchbox-mounted occupancy sensors.
7. Digital timer light switch.
8. Outdoor motion sensors.
9. Lighting contactors.
10. Conductors and cables.

B. Related Requirements:
1. Section 260010 "Supplemental Requirements for Electrical" for additional abbreviations, definitions, submittals, qualifications, testing agencies, and other Project requirements applicable to Work specified in this Section.
2. Section 260011 "Facility Performance Requirements" for seismic-load, wind-load, acoustical, and other field conditions applicable to Work specified in this Section.
3. Section 262726 "Wiring Devices" for wall-box dimmers, non-networkable wall-switch occupancy sensors, and manual light switches.

1.2 ACTION SUBMITTALS

A. Product Data:
1. For each type of product.

B. Shop Drawings:
1. Show installation details for the following:
a. Occupancy sensors.
b. Vacancy sensors.
2. Interconnection diagrams showing field-installed wiring.
3. Include diagrams for power, signal, and control wiring.

C. Field quality-control reports.

1.3 INFORMATIONAL SUBMITTALS

A. Sample Warranty: For manufacturer's warranties.

1.4 WARRANTY

A. Special Extended Warranty: Manufacturer and Installer warrant that installed lighting control devices perform in accordance with specified requirements and agree to repair or replace, including labor, materials, and equipment, devices that fail to perform as specified within extended warranty period.
1. Failures include, but are not limited to, the following:
a. Faulty operation of lighting control software.
b. Faulty operation of lighting control devices.
2. Extended Warranty Period: Two year(s) from date of Substantial Completion.

PART 2 PRODUCTS

2.1 ELECTRONIC TIME SWITCHES

A. Electronic Time Switches: Solid state, programmable, with alphanumeric display; complying with UL 917.
   1. Listed and labeled in accordance with NFPA 70, by a qualified electrical testing laboratory recognized by authorities having jurisdiction, and marked for intended location and application.
   2. Contact Configuration: SPST.
   3. Contact Rating: 30 A inductive or resistive, 240 V(ac).
   4. Programs:
      a. Eight on-off set points on a 24-hour schedule and an annual holiday schedule that overrides the weekly operation on holidays.
   5. Circuitry: Allow connection of a photoelectric relay as substitute for on-off function of a program on selected channels.
   6. Astronomic Time: All channels.
   7. Automatic daylight savings time changeover.
   8. Battery Backup: Not less than seven days reserve, to maintain schedules and time clock.

2.2 OUTDOOR PHOTOELECTRIC SWITCHES, SOLID STATE, FLEXIBLE MOUNTING

A. Description: Solid state, with SPST dry contacts rated for 1000 W LED, to operate connected relay, contactor coils, or microprocessor input; complying with UL 773A, and compatible with ballasts and LED lamps.
   1. Listed and labeled in accordance with NFPA 70, by a qualified electrical testing laboratory recognized by authorities having jurisdiction, and marked for intended location and application.
   2. Light-Level Monitoring Range: 1.5 to 10 fc (16.14 to 108 lx), with an adjustment for turn-on and turn-off levels within that range, and a directional lens in front of the photocell to prevent fixed light sources from causing turn-off.
   3. Time Delay: Fifteen-second minimum, to prevent false operation.
   4. Surge Protection: Metal-oxide varistor.
   5. Mounting: Twist lock complies with ANSI C136.10, with base-and-stem mounting or stem-and-swivel mounting accessories as required to direct sensor to the north sky exposure from same source and manufacturer as switch.
   6. Failure Mode: Luminaire stays ON.

2.3 INDOOR OCCUPANCY AND VACANCY SENSORS

A. General Requirements for Sensors:
   1. Wall or Ceiling-mounted, solid-state indoor occupancy sensors.
   2. Dual technology.
   3. Listed and labeled in accordance with NFPA 70, by a qualified electrical testing laboratory recognized by authorities having jurisdiction, and marked for intended location and application.
   4. Operation:
      a. Occupancy Sensor: Unless otherwise indicated, turn lights on when coverage area is occupied, and turn them off when unoccupied; with a time delay for turning lights off, adjustable over a minimum range of 1 to 15 minutes.
      b. Vacancy Sensor: Unless otherwise indicated, lights are manually turned on and sensor turns lights off when the room is unoccupied; with a time delay for turning lights off, adjustable over a minimum range of 1 to 15 minutes.
      c. Combination Sensor: Unless otherwise indicated, sensor must be programmed to turn lights on when coverage area is occupied and turn them off when unoccupied, or to turn off lights that have been manually turned on; with a time delay for turning lights off, adjustable over a minimum range of 1 to 15 minutes.
   5. Sensor Output: Contacts rated to operate the connected relay, complying with UL 773A.
   6. Power: Line voltage.
   7. Power Pack: Dry contacts rated for 20 A LED load at 120 and 277 V(ac), for 13 A tungsten at 120 V(ac), and for 1 hp at 120 V(ac). Sensor has 24 V(dc), 150 mA, Class 2 power source.

8. Mounting:
    a. Sensor: Suitable for mounting in any position in a standard device box or outlet box.
    b. Relay: Externally mounted through a 1/2 inch knockout in a standard electrical enclosure.
    c. Time-Delay and Sensitivity Adjustments: Recessed and concealed behind hinged door.
9. Indicator: Digital display, to show when motion is detected during testing and normal operation of sensor.
10. Bypass Switch: Override the "on" function in case of sensor failure.
11. Automatic Light-Level Sensor: Adjustable from 2 to 200 fc (21.5 to 2152 lx); turn lights off when selected lighting level is present.

B. Dual-Technology Type: Wall or Ceiling mounted; detect occupants in coverage area using PIR and ultrasonic detection methods. The particular technology or combination of technologies that control on-off functions is selectable in the field by operating controls on unit.
1. Sensitivity Adjustment: Separate for each sensing technology.
2. Detector Sensitivity: Detect occurrences of 6 inch minimum movement of any portion of a human body that presents a target of not less than 36 sq. inch (23 200 sq. mm), and detect a person of average size and weight moving not less than 12 inch in either a horizontal or a vertical manner at an approximate speed of 12 inch/s (305 mm/s).
3. Detection Coverage (Standard Room): Detect occupancy anywhere within a circular area of 1000 sq. ft. (93 sq. m) when mounted on a 96 inch high ceiling.
4. Detection Coverage (Room, Wall Mounted): Detect occupancy anywhere within a 180-degree pattern centered on the sensor over an area of 1000 sq. ft. (110 sq. m) when mounted 48 inch above finished floor.

2.4 SWITCHBOX-MOUNTED OCCUPANCY SENSORS

A. General Requirements for Sensors: Automatic-wall-switch occupancy sensor with manual on-off switch, suitable for mounting in a single gang switchbox, with provisions for connection to BAS.
1. Listed and labeled in accordance with NFPA 70, by a qualified electrical testing laboratory recognized by authorities having jurisdiction, and marked for intended location and application, and must comply with California Title 24.
2. Occupancy Sensor Operation: Unless otherwise indicated, turn lights on when coverage area is occupied, and turn lights off when unoccupied; with a time delay for turning lights off, adjustable over a minimum range of 1 to 15 minutes.
3. Operating Ambient Conditions: Dry interior conditions, 32 to 120 deg F (0 to 49 deg C).
4. Switch Rating: Not less than 800 VA LED load at 120 V, 1200 VA LED load at 277 V, and 800 W incandescent.

B. Wall-Switch Sensor:
1. Standard Range: 180-degree field of view, field adjustable from 180 to 40 degrees; with a minimum coverage area of 900 sq. ft. (84 sq. m).
2. Sensing Technology: Dual technology - PIR and ultrasonic.
3. Switch Type: SP
4. Capable of controlling load in three-way application.
5. Voltage: Match the circuit voltage.
6. Ambient-Light Override: Concealed, field-adjustable, light-level sensor from 10 to 150 fc (108 to 1600 lx). The switch prevents the lights from turning on when the light level is higher than the set point of the sensor.
7. Concealed, field-adjustable, "off" time-delay selector at up to 30 minutes.
8. Concealed, "off" time-delay selector at 30 seconds and 5, 10, and 20 minutes.
9. Adaptive Technology: Self-adjusting circuitry detects and memorizes usage patterns of the space and helps eliminate false "off" switching.
10. Color: White.
11. Faceplate: Color matched to switch.

2.5 OUTDOOR MOTION SENSORS

A. Description: Solid-state outdoor motion sensors.

1. Listed and labeled in accordance with NFPA 70, by a qualified electrical testing laboratory recognized by authorities having jurisdiction, and marked for intended location and application, and must comply with California Title 24.
2. PIR type, weatherproof. Detect occurrences of 6 inch minimum movement of any portion of a human body that presents a target of not less than 36 sq. inch (23 200 sq. mm). Comply with UL 773A.
3. Switch Rating:
   a. Luminaire-Mounted Sensor: 1000 W incandescent, 500 VA fluorescent/LED.
   b. Separately Mounted Sensor: Dry contacts rated for 20 A LED load at 120 and 277 V(ac), for 13 A tungsten at 120 V(ac), and for 1 hp at 120 V(ac). Sensor has 24 V(dc), 150 mA, Class 2 power source.
4. Switch Type: SP.
5. Voltage: Match the circuit voltage type.
6. Detector Coverage:
   a. Standard Range: 210-degree field of view, with a minimum coverage area of 900 sq. ft. (84 sq. m).
   b. Long Range: 180-degree field of view and 110 feet detection range.
7. Ambient-Light Override: Concealed, field-adjustable, light-level sensor from 10 to 150 fc (108 to 1600 lx). The switch prevents the lights from turning on when the light level is higher than the set point of the sensor.
8. Concealed, field-adjustable, "off" time-delay selector at up to 30 minutes.
9. Concealed, "off" time-delay selector at 30 seconds and 5, 10, and 20 minutes.
10. Adaptive Technology: Self-adjusting circuitry detects and memorizes usage patterns of the space and help eliminate false "off" switching.
11. Operating Ambient Conditions: Suitable for operation in ambient temperatures ranging from minus 40 to plus 130 deg F (minus 40 to plus 54 deg C), rated as "raintight" in accordance with UL 773A.

2.6 CONDUCTORS AND CABLES

A. Power Wiring to Supply Side of Remote-Control Power Sources: Not smaller than No. 12 AWG. Comply with requirements in Section 260519 "Low-Voltage Electrical Power Conductors and Cables."

B. Classes 2 and 3 Control Cable: Multiconductor cable with stranded-copper conductors not smaller than No. 18 AWG. Comply with requirements in Section 260519 "Low-Voltage Electrical Power Conductors and Cables."

C. Class 1 Control Cable: Multiconductor cable with stranded-copper conductors not smaller than No. 14 AWG. Comply with requirements in Section 260519 "Low-Voltage Electrical Power Conductors and Cables."

PART 3 EXECUTION

3.1 INSTALLATION OF SENSORS

A. Coordinate layout and installation of ceiling-mounted devices with other construction that penetrates ceilings or is supported by them, including light fixtures, HVAC equipment, smoke detectors, fire-suppression systems, and partition assemblies.

B. Install and aim sensors in locations to achieve not less than 90 percent coverage of areas indicated. Do not exceed coverage limits specified in manufacturer's instructions.

3.2 INSTALLATION OF CONTACTORS

A. Mount electrically held lighting contactors with elastomeric isolator pads to eliminate structure-borne vibration unless contactors are installed in an enclosure with factory-installed vibration isolators.

3.3 INSTALLATION OF WIRING

A. Wiring Method: Comply with Section 260519 "Low-Voltage Electrical Power Conductors and Cables." Minimum conduit size is 1/2 inch.

B. Wiring within Enclosures: Separate power-limited and nonpower-limited conductors in accordance with conductor manufacturer's instructions.

C. Size conductors in accordance with lighting control device manufacturer's instructions unless otherwise indicated.

D. Splices, Taps, and Terminations: Make connections only on numbered terminal strips in junction, pull, device, and outlet boxes; terminal cabinets; and equipment enclosures.

3.4 IDENTIFICATION

A. Identify components and power and control wiring in accordance with Section 260553 "Identification for Electrical Systems.

B. Label time switches and contactors with a unique designation.

3.5 FIELD QUALITY CONTROL

A. Field tests must be witnessed by authorities having jurisdiction.

B. Tests and Inspections:

1. Operational Test: After installing time switches and sensors, and after electrical circuitry has been energized, start units to confirm proper unit operation.

2. Test and adjust controls and safeties. Replace damaged and malfunctioning controls and equipment.

C. Nonconforming Work:

1. Lighting control devices will be considered defective if they do not pass tests and inspections.

2. Remove and replace defective units and retest.

D. Prepare test and inspection reports.

E. Manufacturer Services:

1. Engage factory-authorized service representative to support field tests and inspections.

3.6 ADJUSTING

A. Occupancy Adjustments: When requested within 12 months from date of Substantial Completion, provide on-site assistance in adjusting lighting control devices to suit actual occupied conditions. Provide up to two visits to Project during other-than-normal occupancy hours for this purpose.

1. For occupancy and motion sensors, verify operation at outer limits of detector range. Set time delay to suit Owner's operations.

2. For daylighting controls, adjust set points and deadband controls to suit Owner's operations.

3. Align high-bay occupancy sensors using manufacturer's laser aiming tool.

3.7 MAINTENANCE

A. Software and Firmware Service Agreement:

1. Technical Support: Beginning at Substantial Completion, verify that software and firmware service agreement includes software support for two years.

2. Upgrade Service: At Substantial Completion, update software and firmware to latest version. Install and program software upgrades that become available within two years from date of Substantial Completion. Verify upgrading software includes operating system and new or revised licenses for using software.

a. Upgrade Notice: No fewer than 30 days to allow Owner to schedule and access the system and to upgrade computer equipment if necessary.

3. Upgrade Reports: Prepare written report after each update, documenting upgrades installed.

END OF SECTION

SECTION 261213 - LIQUID-FILLED, MEDIUM-VOLTAGE TRANSFORMERS

PART 1 GENERAL

1.1 SUMMARY

A. Section Includes:
1. Liquid-filled, medium-voltage substation transformers, with primary and secondary bushings within or without air-terminal enclosures.
2. Control network.
3. Warning labels and signs.

B. Related Requirements:
1. Section 260010 "Supplemental Requirements for Electrical" for additional abbreviations, definitions, submittals, qualifications, testing agencies, and other Project requirements applicable to Work specified in this Section.
2. Section 260011 "Facility Performance Requirements for Electrical" for seismic-load, wind-load, acoustical, and other field conditions applicable to Work specified in this Section.

1.2 PREINSTALLATION MEETINGS

A. Preinstallation Conference: Conduct conference at Project site.

B. Preinstallation Coordination Meeting(s): For liquid-filled, medium-voltage transformers. Conduct meeting(s) at Project site before installation.

1.3 ACTION SUBMITTALS

A. Product Data:
1. For each type of product.

B. Shop Drawings:
1. For liquid-filled, medium-voltage transformers.
a. Include plans and elevations showing major components and features.
1) Include plan view and cross section of equipment base, showing clearances, manufacturer's recommended workspace, and locations of penetrations for grounding and conduits.
b. Include details of equipment assemblies and indicate dimensions, weights, loads, required clearances, method of field assembly, components, and location and size of field connections.
c. Include single-line diagram.
d. Include list of materials.
e. Include nameplate legends.

C. Field Quality-Control Submittals:
1. Field quality-control reports.

1.4 INFORMATIONAL SUBMITTALS

A. Product Certificates: For transformers, signed by product manufacturer.

B. Source quality-control reports.

PART 2 PRODUCTS

2.1 SYSTEM DESCRIPTION

A. Electrical Components, Devices, and Accessories: Listed and labeled in accordance with NFPA 70, by qualified electrical testing laboratory recognized by authorities having jurisdiction, and marked for intended location and application.

B. Comply with IEEE C2.
C. Comply with IEEE C57.12.00.

2.2 PERFORMANCE REQUIREMENTS

A. Windings Material: Aluminum or Copper.
B. Surge Arresters: Comply with IEEE C62.11, Distribution Class; metal-oxide-varistor type, connected in each phase of incoming circuit and ahead of disconnecting device.
C. Winding Connections: Connection of windings and terminal markings must comply with IEEE C57.12.70.
D. Efficiency: Comply with 10 CFR 431, Subpart K.
E. Insulation:
    1. Transformer kVA Rating, when Indicated at 65 deg C Rise, Must Be as Follows: Average winding temperature rise above ambient temperature must not exceed 65 deg C and 80 deg C hottest-spot temperature rise at rated kVA when tested in accordance with IEEE C57.12.90, using combination of connections and taps that give highest average winding temperature rise.
F. Bushings must comply with IEEE C57.19.01 requirements for impulse and low-frequency insulation levels.
G. Tap Changer: External, for de-energized operation.
H. Mounting: Integral skid mounting frame, suitable to allow skidding or rolling of transformer in any direction, and with provision for anchoring frame to pad.
I. Insulating Liquids:
    1. Mineral Oil: ASTM D3487, Type II, and tested for compliance with ASTM D117.
    2. Edible-Seed-Oil-Based Dielectric: Listed and labeled by qualified electrical testing laboratory recognized by authorities having jurisdiction as complying with NFPA 70 requirements for fire point of not less than 300 deg C when tested in accordance with ASTM D92. Liquid must be biodegradable and nontoxic, having passed Organisation for Economic Co-operation and Development G.L.203 with zero mortality, and must be certified by U.S. Environmental Protection Agency as biodegradable, meeting Environmental Technology Verification requirements.
J. Capacities and Characteristics:
    1. Location: Outdoors.
    2. Additional Standards: Comply with IEEE C57.12.10.
        a. Comply with UL 1062 listing requirements.
        b. Comply with FM Global Class No. 3990.
        c. Comply with UL listing requirements for combination classification and listing for transformer and less-flammable insulating liquid.
    3. Connections:
        a. Primary: Air-filled terminal cabinet for cable connection.
        b. Secondary: Air-filled terminal cabinet for cable connection
    4. Transformer Ratings. Comply with IEEE C57.12.00 for cooling class.
        a. Self-Cooled Rating, kVA as indicated on drawings.
        b. Impedance: Not less than 5.75 percent.
        c. Temperature Rise: 65 deg C.
        d. Coils Connection:
            1) Line-Side Winding: Delta.
            2) Load-Side Winding: Wye.
        e. Voltage and BIL Ratings:
            1) Nominal primary phase-to-phase voltage and BIL: 12,000 V, 95 kV.
            2) Nominal secondary voltage and BIL: 480Y/277 V, 45 kV.
    5. Finish:
        a. Outdoor Transformer Enclosure Finish: Factory-applied finish in manufacturer's standard color, corrosion resistance complying with IEEE C57.12.28.
        b. Special Corrosion-Resistant Enclosure Finish: Factory-applied, corrosion-resistant finish in manufacturer's standard color that withstands 120 hours of exposure to salt-spray test specified in ASTM B117 without loss of paint or release of adhesion of paint primer coat to metal surface in excess of 1/16 inch (2 mm) from test mark. Scribed test mark and test evaluation must be in accordance with ASTM D1654 with rating of not less than 7, in accordance with Table 1 (Procedure A). Cut edges or otherwise damaged surfaces of hot-

dip galvanized sheet steel, or mill-galvanized sheet steel must be coated with manufacturer's standard zinc-rich paint.

6. Taps: Two 2-1/2 percent, full-capacity taps above, and two 2-1/2 percent, full-capacity taps below rated voltage. Comply with IEEE C57.12.36 requirements.
7. Transformer Accessories:
   a. Drain and filter connection.
   b. Filling and top filter press connections.
   c. Pressure-vacuum gauge.
   d. Dial-type analog thermometer with alarm contacts.
   e. Magnetic liquid level indicator with high and low alarm contacts.
   f. Pressure-relief device set to operate at 10 psig, plus or minus 2 psig, and then automatically reseal when pressure drops to 6 psig minimum. Device flow must be as recommended by manufacturer. With alarm contacts and manual bleeder.
   g. At least four stainless steel ground connection pads.
   h. Provisions for jacking, lifting, and towing.
   i. Machine-engraved nameplate made of anodized aluminum or stainless steel.
   j. Sudden pressure relay for remote alarm or trip when internal transformer pressure rises at field-set rate. Provide with seal-in delay.

2.3 CONTROL NETWORK

A. Controllers: Support serial MS/TP and Ethernet IP communications, and able to communicate directly via RS-485 serial networks and Ethernet 10Base-T networks as native device.

2.4 WARNING LABELS AND SIGNS

A. Comply with requirements for labels and signs specified in Section 260553 "Identification for Electrical Systems."
   1. Warning signs must be made of baked enamel.
   2. Equipment Identification Labels: Engraved, laminated-acrylic or -melamine label.

2.5 SOURCE QUALITY CONTROL

A. Factory Tests and Inspections: Perform the following tests and inspections on liquid-filled, medium-voltage transformer, by, or under supervision of, qualified electrical testing laboratory recognized by authorities having jurisdiction, before delivering to site. Affix label with name and date of manufacturer's certification of system compliance on control units.
   1. Resistance.
   2. Turns ratio, polarity, and phase relation.
   3. Transformer no-load losses and excitation current at 100 percent of ratings.
   4. Transformer impedance voltage and load loss.
   5. Operation of devices.
   6. Control (auxiliary) and consumption losses.
   7. Lightning impulse.
   8. Low frequency.
   9. Leak.
B. Nonconforming Work:
   1. System equipment that does not pass tests and inspections will be considered defective.
C. Prepare test and inspection reports.

PART 3 EXECUTION

3.1 EXAMINATION

A. Handling:

1. Handle transformers carefully, in accordance with manufacturer recommendations, to avoid damage to enclosure, termination compartments, base, frame, tank, and internal components. Do not subject transformers to impact, jolting, jarring, or rough handling.
2. Protect transformer termination compartments against entrance of dust, rain, and snow.
3. Transport transformers upright, to avoid internal stresses on core and coil mounting assembly and to prevent trapping air in windings. Do not tilt or tip transformers.

B. Examine areas and space conditions for compliance with requirements for liquid-filled, medium-voltage transformers and other conditions affecting performance of the Work.

C. Examine roughing-in of conduits and grounding systems to verify the following:
1. Wiring entries comply with layout requirements.
2. Entries are within conduit-entry tolerances specified by manufacturer, and no feeders will cross section barriers to reach load or line lugs.

D. Verify that ground connections are in place and that requirements in Section 260526 "Grounding and Bonding for Electrical Systems" have been met. Maximum ground resistance must be 5 Ω at transformer location.

E. Proceed with installation only after unsatisfactory conditions have been corrected.

3.2 INSTALLATION

A. Install transformers on cast-in-place concrete equipment base(s). Comply with requirements for equipment bases and foundations specified in Section 260529 "Hangers and Supports for Electrical Systems."

B. Transformer must be installed level and plumb and must tilt less than 1.5 degrees while energized.

C. Comply with requirements for vibration isolation and seismic control devices specified in Section 260529 "Hangers and Supports for Electrical Systems" and Section 260548 "Vibration and Seismic Controls for Electrical Systems."

D. Maintain minimum clearances and workspace at equipment in accordance with manufacturer's written instructions and NFPA 70.

3.3 CONNECTIONS

A. Ground equipment in accordance with Section 260526 "Grounding and Bonding for Electrical Systems."
1. At Interior Locations: For grounding to grounding electrodes, use bare copper cable not smaller than 4/0 AWG. Bond surge arrester and neutrals directly to transformer enclosure and then to grounding electrode system with bare copper conductors. Keep leads as short as practicable, with no kinks or sharp bends. Make joints in grounding conductors and loops by exothermic weld or compression connector.
2. At Exterior Locations:
   a. For counterpoise, use tinned bare copper cable not smaller than 4/0 AWG, buried not less than 30 inch (765 mm) below grade interconnecting grounding electrodes. Bond surge arrester and neutrals directly to transformer enclosure and then to grounding electrode system with bare copper conductors. Keep lead lengths as short as practicable, with no kinks or sharp bends.
   b. Fence and equipment connections must not be smaller than 4 AWG. Ground fence at gate post and corner post and at intervals not exceeding 10 ft (3 m). Bond gate section to fence post using 1/8 by 1 inch (3 by 25 mm) flexible braided copper strap and clamps.
   c. Make joints in grounding conductors and loops by exothermic weld or compression connector.
3. Terminate grounding and bonding conductors on common equipment grounding terminal on transformer enclosure. Install supplemental terminal bars, lugs, and bonding jumpers as required to accommodate number of conductors for termination.
4. Complete transformer tank grounding and lightning arrester connections prior to making other electrical connections.

B. Terminate medium-voltage cables in incoming section of substations in accordance with Section 260513 "Medium-Voltage Cables."

3.4 SIGNS AND LABELS

A. Comply with installation requirements for labels and signs specified in Section 260553 "Identification for Electrical Systems."

B. Install warning signs as required to comply with 29 CFR 1910.269.

3.5 FIELD QUALITY CONTROL

A. Field tests and inspections must be witnessed by authorities having jurisdiction.
B. Tests and Inspections:
    1. General Field-Testing Requirements:
        a. Comply with provisions of "Testing and Test Methods" Chapter in NFPA 70B.
        b. After installing transformer but before primary is energized, verify that grounding system at substation is tested at specified value or less.
C. Nonconforming Work:
    1. Equipment and devices will be considered defective if they do not pass tests and inspections.
    2. Remove and replace malfunctioning units and retest.
D. Assemble and submit test and inspection reports. Record as-left set points of adjustable devices.
E. Manufacturer Services:
    1. Engage factory-authorized service representative to support field tests and inspections.

END OF SECTION

SECTION 261326 - MEDIUM-VOLTAGE METAL-CLAD SWITCHGEAR

PART 1 GENERAL

1.1 SUMMARY

A. Section includes indoor metal-clad switchgear.
B. Related Requirements:
1. Section 260010 "Supplemental Requirements for Electrical" for additional abbreviations, definitions, submittals, qualifications, testing agencies, and other Project requirements applicable to Work specified in this Section.
2. Section 260011 "Facility Performance Requirements for Electrical" for seismic-load, wind-load, acoustical, and other field conditions applicable to Work specified in this Section.

1.2 ACTION SUBMITTALS

A. Product Data: For each type of product.
B. Shop Drawings: For each medium-voltage, metal-clad switchgear.
1. Include a tabulation of installed devices with features and ratings.
2. Include dimensioned plans and elevations, showing dimensions, shipping sections, and weights of each assembled section. Elevations must show major components, features, and mimic bus diagram.
3. Include a plan view and cross section of equipment base showing clearances, manufacturer's recommended work space, and locations of penetrations for grounding and conduits. Show location of anchor bolts and leveling channels.
4. Include details of equipment assemblies. Indicate dimensions, weights, loads, required clearances, method of field assembly, and location and size of each field connection.
5. Locate accessory and spare equipment storage.
6. Include single-line diagram.
7. Include control power wiring diagrams.
8. Include batteries, battery rack, equipment base, and room layout.
9. Include copy of nameplate.
10. Test results of enclosure corrosion resistant finish.
11. Ratings the switchgear assembly:
a. Voltage.
b. Continuous current.
c. Short-circuit current.
d. Lightning impulse full-wave withstand voltage.
12. Utility company's metering provisions with indication of approval by utility company.
13. Design Calculations: Signed and sealed by a qualified structural professional engineer. Calculate requirements for selecting seismic restraints.
14. Relay settings.
15. Interface data with monitoring or control network.
16. Wiring Diagrams: For each switchgear assembly include the following:
a. Power, signal, and control wiring.
b. Three-line diagrams of current and future secondary circuits showing device terminal numbers and internal diagrams.
c. Schematic control diagrams.
d. Diagrams showing connections of component devices and equipment.
e. Schematic diagrams showing connections to remote devices including connection details to the communications network.

1.3 INFORMATIONAL SUBMITTALS

A. Product certificates.

B. Source quality-control reports.
C. Field quality-control reports.

1.4 WARRANTY

A. Special Battery Warranties: Manufacturer and Installer agree to repair or replace the switchgear control system storage batteries that fail in materials or workmanship within specified warranty period.
   1. Warranted Cycle Life for Premium VRLA Batteries: Equal to or greater than that represented in manufacturer's published table, including figures corresponding to the following, based on annual average battery temperature of 77 deg F (25 deg C):
      a. For discharge rate not faster than eight hours, discharge duration not longer than eight hours, and voltage at end of discharge not less than 1.67 V, warranted life must be not fewer than 40 discharge cycles.
      b. For discharge rate not faster than 30 minutes, discharge duration not longer than 30 minutes, and voltage at end of discharge not less than 1.67 V, warranted life must be not fewer than 20 discharge cycles.
      c. For discharge rate not faster than 15 minutes, discharge duration not longer than 1.5 minutes, and voltage at end of discharge not less than 1.67 V, warranted life must be not fewer than 750 discharge cycles.

PART 2 PRODUCTS

2.1 SYSTEM DESCRIPTION

A. Manufactured Unit: Indoor, metal-clad switchgear, designed for application in solidly grounded neutral system.
B. Comply with IEEE ANSI C37.20.2.
C. The switchgear ratings must comply with IEEE ANSI C37.04, and must be the preferred ratings of IEEE ANSI C37.06.
D. Switchgear Components, Devices, and Accessories: Listed and labeled in accordance with NFPA 70, by a qualified electrical testing laboratory, and marked for intended location and application.

2.2 SWITCHGEAR ENCLOSURE

A. Indoor Enclosure: Steel.
B. Enclosure Finish:
   1. Indoor Finish: Factory-applied finish in manufacturer's standard gray over a rust-inhibiting primer on treated metal surface.

2.3 SWITCHGEAR CONSTRUCTION

A. Deadfront, metal-clad, drawout, switchgear assembly of vertical sections, with vacuum circuit breakers. Provide additional vertical sections to house accessories related to the switchgear functions.
   1. Front and rear access switchgear.
   2. Front and rear vertical section covers with full-length hinges. The front cover must be a flanged door with latching hardware. The rear cover may be bolted.
   3. Switchgear must be arc resistant, complying with IEEE ANSI C37.20.7, Type 1A.
B. Bus: Tin-plated copper.
   1. Ground Bus: Sized to carry the rated short-time withstand current, extended full length of the switchgear assembly, and connected to the metal enclosures of each vertical section.
C. Circuit Breaker Compartments: Include a racking mechanism, circuit breaker operated automatic shutters covering the high-voltage bus connections, safety interlocks.
D. Auxiliary Vertical Sections and Compartments:
   1. Utility metering compartment that complies with utility company requirements.
   2. Owner's Metering: A vertical section with a front hinged door for isolated access to meters and associated terminal and fuse blocks for maintenance, calibration, or testing while the gear is energized.

E. Circuit Breakers: Horizontally mounted, drawout, vacuum circuit breakers, operated by a motor-charged stored-energy mechanism, and having manual means of charging the mechanism.
   1. Electrically Operated: 120 V(dc) close and trip. Powered from an external power source.
F. Accessory Set: Tools and miscellaneous items required for interrupter switchgear test, inspection, maintenance, and operation.
   1. One of each size handling device to remove the circuit breaker from metal-clad switchgear and to move the breaker about on the floor.
   2. Test cabinet with accessories to connect to the secondary contacts on an electrically operated removable element, permitting operation and testing of the removable element when it is removed from the housing.
G. Capacities and Characteristics:
   1. Comply with IEEE ANSI C37.06.
   2. Switchgear Assembly:
      a. Rated Maximum Design Voltage and BIL (Dielectric Test): 15 kV, 95 kV.
      b. Rated Continuous Current: 2000 A.
      c. Rated Short-Circuit Current and Short-Time Current: 40 kA RMS
   3. Circuit Breakers:
      a. Same capacities and characteristics as the switchgear assembly, and as follows:
         1) Rated Continuous Current and Load Switching Current: 2000 A.
         2) Rated Closing and Latching Current: 104 kA, peak.
         3) Rated Interrupting Time: 50 ms.

2.4 SURGE ARRESTERS

A. Comply with IEEE ANSI C62.11, distribution class; metal-oxide-varistor type, connected in each phase of incoming circuit and ahead of disconnecting device.

2.5 INSTRUMENTS

A. Instrument Transformers: Comply with IEEE ANSI C57.13.
   1. Potential Transformers: Secondary voltage rating of 120 V and NEMA C 12.11 accuracy class of 0.3 with burdens of W, X, and Y.
   2. Current Transformers: Burden and accuracy class suitable for connected relays, meters, and instruments.
B. Metering: Install the following listed Owner's instruments, comply with requirements in Section 260913 "Electrical Power Monitoring":
C. Multifunction Digital Meter and Monitor: Microprocessor-based unit suitable for three- or four-wire systems.
   1. Inputs from sensors or 5 A current-transformer secondaries, and potential terminals rated to 600 V.
   2. Switch-selectable digital display with the following features:
      a. Phase Currents, Each Phase: Plus or minus 1 percent.
      b. Phase-to-Phase Voltages, Three Phase: Plus or minus 1 percent.
      c. Phase-to-Neutral Voltages, Three Phase: Plus or minus 1 percent.
      d. Three-Phase Real Power: Plus or minus 2 percent.
      e. Three-Phase Reactive Power: Plus or minus 2 percent.
      f. Power Factor: Plus or minus 2 percent.
      g. Frequency: Plus or minus 0.5 percent.
      h. Integrated Demand, with Demand Interval Selectable from 5 to 60 Minutes: Plus or minus 2 percent.
   3. Communications module suitable for remote monitoring of meter quantities and functions. Interface communication and metering requirements in accordance with Section 260913 "Electrical Power Monitoring."
   4. Mounting: Display and control unit that is flush or semiflush mounted in instrument compartment door.

2.6 PROTECTIVE RELAYS

A. Multifunctional, solid-state microprocessor-based relay systems, complying with IEEE ANSI C37.90.

B. Relay Mounting:
   1. Each relay must be mounted in a drawout case with a two-stage quick-release operation.
   2. Removal of the relay from the case must disconnect the trip circuits and short the current-transformer secondaries before the unit control power is disconnected.
   3. When the relay is inserted into the case, control power connections must be made before the trip circuits are activated.
   4. Include a self-shorting contact on the case terminal block for alarm indication and tripping of circuit breaker upon removal of the relay from the case.
C. Equip each relay system with a communications module to transmit the following data in accordance with Section 260913 "Electrical Power Monitoring."
   1. Relay's metered and target data, such as currents, set points, cause of trip, magnitude of trip current, and open-close trip status.
   2. Ability to close and open the associated breaker with proper access code from remote location over the communication network when the relay is configured in remote open-close mode.
D. Overcurrent and Ground-Fault Protective Relays:
   1. IEEE ANSI C37.2 device functions 51/50 and 51/50N.
   2. Field-Selectable Relay Settings: Required by the overcurrent protective device coordination study and arc-flash study.
   3. Primary Current-Transformer Ratings: Programmable from 5 to 5000 A.
   4. Phase and Ground Protection: Field-selectable curves from IEEE moderately inverse, very inverse, or extremely inverse.
   5. Phase Instantaneous Overcurrent Trip Pickup Point: Field selectable as "none" or from 1.0 to 25 times current-transformer primary rating. Include discriminator circuit with "on" and "off" switch so that when phase instantaneous overcurrent has been programmed to "none," the discriminator circuit protects against currents exceeding 11 times current-transformer primary rating when the breaker is being closed and must be deactivated after approximately eight cycles.
   6. Contacts:
      a. Two Form-A contacts.
      b. Field selectable into contact pairs as follows and as required by the overcurrent protective device coordination study and arc-flash study:
         1) One contact assigned function 51 phase and function 51 ground, and the other contact assigned function 50 phase and function 50 ground.
         2) One contact assigned function 51/50 phase, and the other contact assigned function 51/50 ground.
   7. Alphanumeric display to show the following parameters with metering accuracy not to exceed 2 percent of full scale:
      a. Individual phase currents.
      b. Ground current.
      c. Cause of trip.
      d. Magnitude and phase of current-causing trip.
      e. Phase or ground indication.
      f. Peak current demand for each phase and ground since last reset.
      g. Current-transformer primary rating.
      h. Programmed phase and ground set points.
   8. Relay alarm and trip contacts must not change state if power is lost or an undervoltage occurs. These contacts must only cause a trip on detection of an overcurrent or fault condition based on programmed settings. A "protection off" alarm must be normally energized when the relay is powered and the self-diagnostics indicates the unit is functional. On loss of power or relay failure, this alarm relay must be de-energized, providing a fail-safe protection off alarm.
E. Sync Check Relay
F. Lock-Out Relay

2.7 AC CONTROL POWER SUPPLY

A. Description: Uninterruptible ac power supply complying with requirements of Section 263353 "Static Uninterruptible Power Supply."

2.8 DC CONTROL POWER SUPPLY

A. Dedicated 120 V(dc) battery system.

B. System Requirements: Battery must have number of cells and ampere-hour capacity based on an initial specific gravity of 1.210 at 77 deg F (25 deg C) with electrolyte at normal level and minimum ambient temperature of 58 deg F (13 deg C). Cycle battery before shipment to guarantee rated capacity on installation. Arrange to operate ungrounded. Battery system capacity must be as recommended by switchgear manufacturer to operate the circuit breakers for intended duty.

C. Battery:

1. Premium VRLA batteries, with system disconnect and overcurrent protective device.
2. Rack: Two-step rack with electrical connections between battery cells and between rows of cells; include two flexible connectors with bolted-type terminals for output leads. Rate battery rack, cell supports, and anchorage for seismic requirements.
3. Accessories:
   a. Set of cell numerals.
   b. Monitoring system.
4. Charger: Static-type silicon rectifier equipped with automatic regulation and provision for manual and automatic adjustment of charging rate. Unit must automatically maintain output voltage within 0.5 percent from no load to rated charger output current, with ac input-voltage variation of plus or minus 10 percent and input-frequency variation of plus or minus 3 Hz.
   a. DC ammeter.
   b. DC Voltmeter: Maximum error of 5 percent at full-charge voltage, with toggle switch to select between battery and charger voltages.
   c. Ground Indication: Two appropriately labeled lights to indicate circuit ground, connected in series between negative and positive terminals, with midpoint junction connected to ground by NO push-button contact.
   d. Capacity: Sufficient to supply steady load, float-charge battery between 2.20 and 2.25 V per cell and equalizing charge at 2.33 V per cell.
   e. Charging-Rate Switch: Manually operated switch to transfer to higher charging rate. Charger operation must be automatic until manually reset.
   f. AC Power Supply: 120 V, 60 Hz, subject to plus or minus 10 percent variation in voltage and plus or minus 3 Hz variation in frequency. Automatic charger operation must resume after loss of ac power supply for interval.
   g. Charging Regulator: Protect charger from damage due to overload, including short circuit on output terminals. The device must regulate charging current but must not disconnect charger from either battery or ac supply.
   h. Charger's Audible Noise: Less than 26 dB.

D. Battery Ground-Fault Detector: Initiates alarm when resistance to ground of positive or negative bus of battery is less than 5000 ohms.

E. Control Wiring: Factory installed, complete with bundling, lacing, and protection.

1. Conductors across Hinges and for Interconnections between Shipping Units: Flexible conductors for No. 8 AWG and smaller.
2. Conductors: Sized in accordance with NFPA 70 for duty required.

2.9 WARNING LABELS AND SIGNS

A. Install appropriate precautionary labels to warn about potential hazards that are inherent to the equipment. Comply with requirements for labels and signs specified in Section 260553 "Identification for Electrical Systems."

1. Warning signs must be baked enamel signs.
2. Equipment Identification Labels: Laminated acrylic or melamine plastic signs

2.10 SOURCE QUALITY CONTROL

A. Perform production tests on each circuit breaker housing for this Project, complying with IEEE ANSI C37.09.

1. Perform mechanical operation tests to ensure proper functioning of shutters, operating mechanism, mechanical interlocks, and interchangeability of removable elements that are designed to be interchangeable.
2. Conduct an alignment test with master circuit breaker to verify interfaces.
3. Verify that control wiring is correct by verifying continuity. Perform electrical operation of relays and devices to ensure they function properly and in the intended sequence.
4. Perform the control wiring dielectric test at 1500 V for one minute.
5. Perform the dielectric test on primary and secondary circuits.

B. Perform production tests, on each circuit breaker supplied for this Project, complying with IEEE ANSI C37.09.
1. Perform mechanical operation tests to ensure proper functioning of the switch.
2. Conduct an alignment test with master cell to verify interfaces and interchangeability.
3. Verify the contact gap. Perform terminal-to-terminal resistance test.
4. Verify that control wiring is correct by verifying continuity. Perform electrical operation of relays and devices to ensure they function properly and in the intended sequence. Operate the circuit breakers over the range of minimum to maximum of the control voltage.
5. Perform the control wiring dielectric test at 1500 V for one minute.
6. Set the contact gap.

PART 3 EXECUTION

3.1 SWITCHGEAR INSTALLATION

A. Equipment Mounting:
1. Install switchgear on cast-in-place concrete equipment base(s) in accordance with Section 260529 "Hangers and Supports for Electrical Systems."
2. Comply with requirements for vibration isolation and seismic control devices specified in Section 260548.16 "Seismic Controls for Electrical Systems."
3. Comply with requirements for vibration isolation devices specified in Section 260529 "Hangers and Supports for Electrical Systems."

B. Switchgear must be installed level and plumb. Switchgear must tilt less than 1.5 degrees while energized.

C. Maintain minimum clearances and workspace at equipment in accordance with manufacturer's instructions and NFPA 70.

D. Comply with NECA 430.

3.2 CONNECTIONS

A. Ground equipment in accordance with Section 260526 "Grounding and Bonding for Electrical Systems."

B. Grounding Connections at Interior Locations:
1. Install bare copper cable not smaller than No. 4/0 AWG for grounding to grounding electrodes.
2. Bond surge arrester and neutrals directly to the switchgear enclosure and then to the grounding electrode system with bare copper conductors.
3. Keep leads as short as practicable with no kinks or sharp bends.
4. Make joints in grounding conductors and loops by exothermic weld or compression connector.

C. Grounding at Exterior Locations:
1. Install tinned bare copper cable not smaller than No. 4/0 AWG, for counterpoise buried not less than 30 inch below grade interconnecting the grounding electrodes.
2. Bond surge arrester and neutrals directly to the switchgear enclosure and then to the grounding electrode system with bare copper conductors, sized as shown.
3. Keep lead lengths as short as practicable with no kinks or sharp bends.
4. Fence and equipment connections must not be smaller than No. 4 AWG.
5. Ground fence at each gate post and corner post and at intervals not exceeding 10 feet.
6. Bond each gate section to the fence post using 1/8 by 1 inch (3 by 25 mm) tinned flexible braided copper strap and clamps.
7. Make joints in grounding conductors and loops by exothermic weld or compression connector.

D. Terminate grounding and bonding conductors on a common equipment grounding terminal on the switchgear enclosure. Install supplemental terminal bars, lugs, and bonding jumpers as required to accommodate the number of conductors for termination.

E. Complete switchgear grounding and lightning arrester connections prior to making other electrical connections.

F. Terminate medium-voltage cables in accordance with Section 260513 "Medium-Voltage Cables."

3.3 SIGNS AND LABELS

A. Comply with the installation requirements for labels and signs specified in Section 260553 "Identification for Electrical Systems."

B. Install warning signs as required to comply with 29 CFR 1910.269.

3.4 FIELD QUALITY CONTROL

A. Field tests and inspections must be witnessed by authorities having jurisdiction.

B. General Field Testing Requirements:

1. Comply with the provisions of NFPA 70B, "Testing and Test Methods."
2. After installing switchgear and after electrical circuitry has been energized, test for compliance with requirements.
3. Perform each visual and mechanical inspection and electrical test. Certify compliance with test parameters.

C. Medium-Voltage Switchgear Assembly Field Tests:

1. Visual and Mechanical Inspection:
   a. Verify that fuse and circuit breaker sizes and types correspond to Drawings and coordination study, as well as to the circuit breaker's address in the control network.
   b. Verify that current and voltage transformer ratios correspond to Drawings.
   c. Inspect bolted electrical connections using calibrated torque-wrench method in accordance with manufacturer's published data or NETA ATS, Table 100.12. Bolt-torque levels must be in accordance with manufacturer's published data. In the absence of manufacturer's published data, use NETA ATS, Table 100.12. Investigate values that deviate from those of similar bolted connections by more than 50 percent of the lowest value.
   d. Confirm correct operation and sequencing of electrical and mechanical interlock systems.
      1) Attempt closure on locked-open devices. Attempt to open locked-closed devices.
      2) Make key exchange with devices operated in off-normal positions.
   e. Verify appropriate lubrication on moving current-carrying parts and on moving and sliding surfaces.
   f. Inspect insulators for evidence of physical damage or contaminated surfaces.
   g. Verify correct barrier and shutter installation and operation.
   h. Exercise active components.
   i. Inspect mechanical indicating devices for correct operation.
   j. Verify that filters are in place and vents are clear.
   k. Perform visual and mechanical inspection of instrument transformers in accordance with "Instrument Transformer Field Tests" Paragraph.
   l. Inspect control power transformers.
      1) Inspect for physical damage, cracked insulation, broken leads, tightness of connections, defective wiring, and overall general condition.
      2) Verify that primary and secondary fuse or circuit breaker ratings match drawings.
      3) Verify correct functioning of drawout disconnecting and grounding contacts and interlocks.
2. Electrical Tests:
   a. Inspect bolted electrical connections using a low resistance ohmmeter to compare bolted resistance values to values of similar connections. Investigate values that deviate from those of similar bolted connections by more than 50 percent of the lowest value.
   b. Perform dc voltage insulation-resistance tests on each bus section, phase to phase and phase to ground, for one minute. If the temperature of the bus is other than plus or minus 20 deg. C, adjust the resulting resistance as provided in NETA ATS, Table 100.11.

1) Insulation-resistance values of bus insulation must be in accordance with manufacturer's published data. In the absence of manufacturer's published data, comply with NETA ATS, Table 100.1. Investigate and correct values of insulation resistance less than manufacturer's recommendations or NETA ATS, Table 100.1.
2) Do not proceed to the dielectric withstand voltage tests until insulation-resistance levels are raised above minimum values.

c. Perform a dielectric withstand voltage test on each bus section, each phase to ground with phases not under test grounded, in accordance with manufacturer's published data. If manufacturer has no recommendation for this test, it must be conducted in accordance with NETA ATS, Table 100.2. Apply the test voltage for one minute.
1) If no evidence of distress or insulation failure is observed by the end of the total time of voltage application during the dielectric withstand test, the test specimen is considered to have passed the test.

d. Perform insulation-resistance tests on control wiring with respect to ground. Applied potential must be 500 V(dc) for 300 V rated cable and 1000 V(dc) for 600 V rated cable. Test duration must be one minute. For units with solid-state components or control devices that cannot tolerate the applied voltage, follow the manufacturer's recommendation.
1) Minimum insulation-resistance values of control wiring must not be less than 2 megohms.

e. Control Power Transformers:
1) Perform insulation-resistance tests. Perform measurements from winding to winding and each winding to ground. Insulation-resistance values of winding insulation must be in accordance with manufacturer's published data. In the absence of manufacturer's published data, comply with NETA ATS, Table 100.1. Investigate and correct values of insulation resistance less than manufacturer's recommendations or NETA ATS, Table 100.1.
2) Perform secondary wiring integrity test. Disconnect transformer at secondary terminals and connect secondary wiring to a rated secondary voltage source. Verify correct potential at all devices.
3) Verify correct secondary voltage by energizing the primary winding with system voltage. Measure secondary voltage with the secondary wiring disconnected.
4) Verify correct function of control transfer relays located in the switchgear with multiple control power sources.

f. Voltage Transformers:
1) Perform secondary wiring integrity test. Verify correct potential at devices.
2) Verify secondary voltages by energizing the primary winding with system voltage.

g. Perform current-injection tests on the entire current circuit in each section of switchgear.
1) Perform current tests by secondary injection with magnitudes such that a minimum current of 1.0 A flows in the secondary circuit. Verify correct magnitude of current at each device in the circuit.
2) Perform current tests by primary injection with magnitudes such that a minimum of 1.0 A flows in the secondary circuit. Verify correct magnitude of current at each device in the circuit.

h. Perform system function tests in accordance with "System Function Tests" Article.

i. Verify operation of space heaters.

j. Perform phasing checks on double-ended or dual-source switchgear to ensure correct bus phasing from each source.

D. Medium-Voltage Vacuum Circuit Breaker Field Tests:
1. Visual and Mechanical Inspection:
a. Inspect physical and mechanical condition.
b. Inspect anchorage, alignment, grounding, and required clearances.
c. Verify that maintenance devices such as special tools and gages specified by the manufacturer are available for servicing and operating the breaker.
d. Verify the unit is clean.
e. Perform mechanical operation tests on operating mechanism in accordance with manufacturer's published data.
f. Measure critical distances on operating mechanism as recommended by the manufacturer. Critical distances of the operating mechanism must be in accordance with manufacturer's published data.

g. Verify cell fit and element alignment.
h. Verify racking mechanism operation.
i. Verify appropriate lubrication on moving current-carrying parts and on moving and sliding surfaces.
j. Verify appropriate lubrication on moving current-carrying parts and on moving and sliding surfaces.
k. Perform time-travel analysis. Travel and velocity values must be in accordance with manufacturer's published data.
l. Record as-found and as-left operation counter reading. Operation counter must advance one digit per close-open cycle.

2. Electrical Tests:
   a. Perform insulation-resistance tests for one minute on each pole, phase-to-phase and phase-to ground with switch closed, and across each open pole. Apply voltage in accordance with manufacturer's published data. In the absence of manufacturer's published data, comply with NETA ATS, Table 100.1. Insulation-resistance values must be in accordance with manufacturer's published data. In the absence of manufacturer's published data, comply with NETA ATS, Table 100.1. Investigate and correct values of insulation resistance less than this table or manufacturer's recommendations. Dielectric-withstand-voltage tests must not proceed until insulation-resistance levels are raised above minimum values.
   b. Perform a contact/pole-resistance test. Compare bolted connection resistance values to values of similar connections. Investigate values that deviate from those of similar bolted connections by more than 50 percent of the lowest value. Microhm or dc millivolt drop values must not exceed the high levels of the normal range as indicated in the manufacturer's published data. If manufacturer's published data is not available, investigate values that deviate from adjacent poles or similar switches by more than 50 percent of the lowest value.
   c. Perform minimum pickup voltage tests on trip and close coils in accordance with manufacturer's published data. Minimum pickup voltage of the trip and close coils must comply with manufacturer's published data. In the absence of the manufacturer's published data, comply with NETA ATS, Table 100.20.
   d. Verify correct operation of auxiliary features, such as electrical close and trip operation, trip-free operation, and anti-pump function. Auxiliary features must operate in accordance with manufacturer's published data.
   e. Trip circuit breaker by operation of each protective device. Reset trip logs and indicators.
   f. Perform power-factor or dissipation-factor tests on each pole with the breaker open and each phase with the breaker closed. Power-factor or dissipation-factor values must comply with manufacturer's published data.
   g. Perform vacuum bottle integrity (dielectric-withstand-voltage) test across each vacuum bottle, with the contacts in the "open" position in accordance with manufacturer's published data. If no evidence of distress or insulation failure is observed by the end of the total time of voltage application during the vacuum bottle integrity test, the test specimen is considered to have passed the test.
   h. Perform a dielectric-withstand-voltage test in accordance with manufacturer's published data. If no evidence of distress or insulation failure is observed by the end of the total time of voltage application during the dielectric-withstand-voltage test, the test specimen is considered to have passed the test.
   i. Verify operation of heaters.

E. Instrument Transformer Field Tests:
   1. Visual and Mechanical Inspection:
      a. Verify that equipment nameplate data complies with Contract Documents.
      b. Inspect physical and mechanical condition.
      c. Verify correct connection of transformers with system requirements.
      d. Verify that adequate clearances exist between primary and secondary circuit wiring.
      e. Verify the unit is clean.
      f. Inspect bolted electrical connections using calibrated torque-wrench method in accordance with manufacturer's published data or NETA ATS, Table 100.12. Bolt-torque levels must be

in accordance with manufacturer's published data. In the absence of manufacturer's published data, use NETA ATS, Table 100.12.

g. Verify that required grounding and shorting connections provide contact.

h. Verify correct operation of transformer withdrawal mechanism and grounding operation.

i. Verify correct primary and secondary fuse sizes for voltage transformers.

j. Verify appropriate lubrication on moving current-carrying parts and on moving and sliding surfaces.

2. Electrical Tests of Current Transformers:

a. Inspect bolted electrical connections using a low resistance ohmmeter to compare bolted resistance values to values of similar connections. Investigate values that deviate from those of similar bolted connections by more than 50 percent of the lowest value.

b. Perform insulation-resistance test of each current transformer and its secondary wiring with respect to ground at 1000 V(dc) for one minute. For units with solid-state components that cannot tolerate the applied voltage, follow manufacturer's recommendations. Investigate and correct values of insulation resistance less than manufacturer's written recommendations or NETA ATS, Table 100.5.

c. Perform a polarity test of each current transformer in accordance with IEEE ANSI C57.13.1. Polarity results must agree with transformer markings.

d. Perform a ratio-verification test using the voltage or current method in accordance with IEEE ANSI C57.13.1. Ratio errors must be in accordance with IEEE ANSI C57.13.

e. Perform an excitation test on transformers used for relaying applications in accordance with IEEE ANSI C57.13.1. Excitation results must match the curve supplied by the manufacturer or be in accordance with IEEE ANSI C57.13.1.

f. Measure current circuit burdens at transformer terminals in accordance with IEEE ANSI C57.13.1. Measured burdens must be compared with and must match instrument transformer ratings.

g. Perform insulation-resistance tests on the primary winding with the secondary grounded. Test voltages must be in accordance with Table 100.5.

h. Perform dielectric withstand tests on the primary winding with the secondary grounded. Test voltages must be in accordance with Table 100.9.

i. Perform power-factor or dissipation-factor tests in accordance with test equipment manufacturer's published data.

j. Verify that current transformer secondary circuits are grounded and have only one grounding point in accordance with IEEE ANSI C57.13.3. That grounding point should be located as specified by the engineer in the project drawings.

3. Electrical Tests of Voltage Transformers.

a. Inspect bolted electrical connections using a low resistance ohmmeter to compare bolted resistance values to values of similar connections. Investigate values that deviate from those of similar bolted connections by more than 50 percent of the lowest value.

b. Perform insulation-resistance tests winding-to-winding and each winding to ground. Test voltages must be applied for one minute in accordance with Table 100.5. For units with solid-state components that cannot tolerate the applied voltage, follow manufacturer's recommendations. Investigate and correct values of insulation resistance less than manufacturer's recommendations or NETA ATS, Table 100.5.

c. Perform a polarity test on each transformer to verify the polarity marks or H1-X1 relationship as applicable. Polarity results must agree with transformer markings.

d. Perform a turns-ratio test on tap positions. Ratio errors must be in accordance with IEEE ANSI C57.13.

e. Measure voltage circuit burdens at transformer terminals. Measured burdens must be compared with and must match instrument transformer ratings.

f. Perform a dielectric withstand test on the primary windings with the secondary windings connected to ground. The dielectric voltage must be in accordance with Table 100.9. The test voltage must be applied for one minute. If no evidence of distress or insulation failure is observed by the end of the total time of voltage application during the dielectric withstand test, the primary windings are considered to have passed the test.

g. Perform power-factor or dissipation-factor tests in accordance with test equipment manufacturer's published data. Power-factor or dissipation-factor values must be in

accordance with manufacturer's published data. In the absence of manufacturer's published data, use test equipment manufacturer's published data.

h. Verify that voltage transformer secondary circuits are grounded and have only one grounding point in accordance with IEEE ANSI C57.13.3. Test results must indicate that the circuits are grounded at only one point.

F. Ground Resistance Test

1. Visual and Mechanical Inspection:

a. Verify ground system complies with Contract Documents and NFPA 70 Article 250, "Grounding and Bonding."

b. Inspect physical and mechanical condition. Grounding system electrical and mechanical connections must be free of corrosion.

c. Inspect bolted electrical connections using calibrated torque-wrench method in accordance with manufacturer's published data or NETA ATS, Table 100.12. Bolt-torque levels must be in accordance with manufacturer's published data. In the absence of manufacturer's published data, use NETA ATS, Table 100.12.

d. Inspect anchorage.

2. Electrical Tests.

a. Perform fall-of-potential or alternative test in accordance with IEEE Std 81 on the main grounding electrode or system. The resistance between the main grounding electrode and ground must be no more than 5 ohms.

b. Perform point-to-point tests to determine the resistance between the main grounding system and major electrical equipment frames, system neutral, and derived neutral points. Investigate point-to-point resistance values that exceed 0.5 ohm. Compare equipment nameplate data with Contract Documents.

c. Inspect physical and mechanical condition.

d. Inspect bolted electrical connections for high resistance using a low-resistance ohmmeter to compare bolted connection resistance values to values of similar connections. Investigate values that deviate from those of similar bolted connections by more than 50 percent of the lowest value.

G. Metering Devices Field Tests:

1. Visual and Mechanical Inspection:

a. Inspect physical and mechanical condition.

b. Inspect bolted electrical connections using calibrated torque-wrench method in accordance with manufacturer's published data or NETA ATS, Table 100.12. Bolt-torque levels must be in accordance with manufacturer's published data. In the absence of manufacturer's published data, use NETA ATS, Table 100.12.

c. Inspect cover gasket, cover glass, condition of spiral spring, disk clearance, contacts, and case shorting contacts, as applicable.

d. Verify the unit is clean.

e. Verify freedom of movement, end play, and alignment of rotating disk(s).

2. Electrical Tests:

a. Inspect bolted electrical connections using a low resistance ohmmeter to compare bolted resistance values to values of similar connections. Investigate values that deviate from those of similar bolted connections by more than 50 percent of the lowest value.

b. Verify accuracy of meters at cardinal points. Meter accuracy must be in accordance with manufacturer's published data.

c. Calibrate meters in accordance with manufacturer's published data. Calibration results must be within manufacturer's published tolerances.

d. Verify instrument multipliers. Instrument multipliers must be in accordance with system design specifications.

e. Verify that current transformer and voltage transformer secondary circuits are intact. Test results must confirm the integrity of the secondary circuits of current and voltage transformers.

H. Medium-Voltage Surge Arrester Field Tests:

1. Visual and Mechanical Inspection:

a. Verify that equipment nameplate data complies with Contract Documents.

b. Inspect physical and mechanical condition.

c. Inspect anchorage, alignment, grounding, and clearances.
d. Verify the arresters are clean.
e. Verify that the ground lead on each device is individually attached to a ground bus or ground electrode.
f. Verify that the stroke counter is correctly mounted and electrically connected if applicable. Record the stroke counter reading.

2. Electrical Test:
   a. Perform an insulation-resistance test on each arrester, phase terminal-to-ground. Apply voltage in accordance with manufacturer's published data. In the absence of manufacturer's published data, comply with NETA ATS, Table 100.1. Replace units that fail to meet recommended minimum insulation resistance listed in the table.
   b. Perform a watts-loss test. Evaluate watts-loss values by comparison with similar units and test equipment manufacturer's published data.
   c. Test grounding connections. Resistance between the arrester ground terminal and the ground system must be less than 0.5 ohm.

I. Microprocessor-Based Protective Relay Field Tests:
1. Visual and Mechanical Inspection:
   a. Record model number, style number, serial number, firmware revision, software revision, and rated control voltage.
   b. Verify operation of light-emitting diodes, display, and targets.
   c. Record passwords for each access level.
   d. Clean the front panel and remove foreign material from the case.
   e. Check tightness of connections.
   f. Verify that the frame is grounded in accordance with manufacturer's instructions.
   g. Set the relay in accordance with results in Section 260573.16 "Coordination Studies" and in Section 260573.19 "Arc-Flash Hazard Analysis."
   h. Download settings from the relay. Print a copy of the settings for the report and compare the settings to those specified in the coordination study.
2. Electrical Tests:
   a. Perform insulation-resistance tests from each circuit to the grounded frame in accordance with manufacturer's published data.
   b. Apply voltage or current to analog inputs, and verify correct registration of the relay meter functions.
   c. Functional Operation: Check functional operation of each element used in the protection scheme as follows:
      1) Timing Relay:
         (a) Determine time delay.
         (b) Verify operation of instantaneous contacts.
      2) Volts/Hertz Relay:
         (a) Determine pickup frequency at rated voltage.
         (b) Determine pickup frequency at a second voltage level.
         (c) Determine time delay.
      3) Sync Check Relay:
         (a) Determine closing zone at rated voltage.
         (b) Determine maximum voltage differential that permits closing at zero degrees.
         (c) Determine live line, live bus, dead line, and dead bus set points.
         (d) Determine time delay.
         (e) Verify dead bus/live line, dead line/live bus, and dead bus/dead line control functions.
      4) Undervoltage Relay:
         (a) Determine dropout voltage.
         (b) Determine time delay.
         (c) Determine time delay at a second point on the timing curve for inverse time relays.
      5) Directional Power Relay:
         (a) Determine minimum pickup at maximum torque angle.
         (b) Determine closing zone.

(c) Determine maximum torque angle.
(d) Determine time delay.
(e) Verify time delay at a second point on the timing curve for inverse time relays.
(f) Plot the operating characteristic.

6) Current Balance Relay:
(a) Determine pickup of each unit.
(b) Determine percent slope.
(c) Determine time delay.

7) Negative Sequence Current Relay:
(a) Determine negative sequence alarm level.
(b) Determine negative sequence minimum trip level.
(c) Determine maximum time delay.
(d) Verify two points on the I-two-squared-t curve.

8) Phase Sequence or Phase Balance Voltage Relay:
(a) Determine positive sequence voltage to close the NO contact.
(b) Determine positive sequence voltage to open the NC contact (undervoltage trip).
(c) Verify negative sequence trip.
(d) Determine time delay to close the NO contact with sudden application of 120 percent of pickup.
(e) Determine time delay to close the NC contact upon removal of voltage when previously set to rated system voltage.

9) Instantaneous Overcurrent Relay:
(a) Determine pickup.
(b) Determine dropout.
(c) Determine time delay.

10) Time Overcurrent:
(a) Determine minimum pickup.
(b) Determine time delay at two points on the time current curve.

11) Ground Detector Relay:
(a) Determine maximum impedance to ground causing relay pickup.

12) Directional Overcurrent Relay:
(a) Determine directional unit minimum pickup at maximum torque angle.
(b) Determine closing zone.
(c) Determine maximum torque angle.
(d) Plot operating characteristics.
(e) Determine overcurrent unit pickup.
(f) Determine overcurrent unit time delay at two points on the time current curve.

d. Control Verification:

1) Functional Tests:
(a) Check operation of active digital inputs.
(b) Check output contacts or silicone-controlled rectifiers (SCRs), preferably by operating the controlled device, such as circuit breaker, auxiliary relay, or alarm.
(c) Check internal logic functions used in protection scheme.
(d) Upon completion of testing, reset min/max recorders, communications statistics, fault counters, sequence-of-events recorder, and event records.

2) In-Service Monitoring: After the equipment is initially energized, measure magnitude and phase angle of inputs and verify expected values.

J. DC System VRLA Batteries Field Test:

1. Visual and Mechanical Inspection:

a. Verify that batteries are adequately located.
b. Verify that battery area ventilation system is operable.
c. Verify existence of suitable eyewash equipment.
d. Verify equipment nameplate data complies with Contract Documents.
e. Inspect physical and mechanical condition.
f. Verify adequacy of battery support racks, mounting, anchorage, alignment, grounding, and clearances.

g. Verify the units are clean.
h. Inspect spill containment installation.
i. Verify application of an oxide inhibitor on battery terminal connections.

2. Electrical Tests:
a. Measure charger float and equalizing voltage levels. Adjust to battery manufacturer's recommended levels.
b. Verify charger functions and that alarms comply with system manufacturer's recommendations.
c. Measure negative post temperature. Negative post temperature must comply with manufacturer's published data or IEEE Std 1188.
d. Measure charger float and equalizing voltage levels. Charger float and equalizing voltage levels must be in accordance with the battery manufacturer's published data.
e. Measure each monoblock/cell voltage and total battery voltage with charger energized and in float mode of operation. Monoblock/cell voltages must be in accordance with manufacturer's published data.
f. Measure intercell connection resistances.
g. Perform internal ohmic measurement tests. Cell internal ohmic values (resistance, impedance, or conductance) must not vary by more than 25 percent between identical cells that are in a fully charged state. Monoblock/cell internal ohmic values (resistance, impedance, or conductance) must not vary by more than 25 percent between identical monoblocks/cells in a fully charged state.
h. Perform a load test in accordance with manufacturer's published data or IEEE Std 1188. Replace units that fail to pass the test.
i. Measure the battery system voltage from positive to ground and negative to ground. Voltage measured from positive to ground must be equal in magnitude to the voltage measured from negative to ground.

K. DC System Vented NiCd Batteries Field Test:
1. Visual and Mechanical Inspection:
a. Verify that batteries are adequately located.
b. Verify that battery area ventilation system is operable.
c. Verify existence of suitable eyewash equipment.
d. Verify equipment nameplate data complies with Contract Documents.
e. Inspect physical and mechanical condition.
f. Verify adequacy of battery support racks, mounting, anchorage, alignment, grounding, and clearances.
g. Verify electrolyte level. Measure pilot-cell electrolyte temperature, and correct as recommended by manufacturer's maintenance procedures to bring the temperature and electrolyte level to within normal limits.
h. Verify the units are clean.
i. Inspect spill containment installation.
j. Verify application of an oxide inhibitor on battery terminal connections.

2. Electrical Tests:
a. Measure charger float and equalizing voltage levels. Adjust to battery manufacturer's recommended levels.
b. Verify charger functions and that alarms comply with system manufacturer's recommendations.
c. Measure each cell voltage and total battery voltage with charger energized and in float mode of operation. Cell voltages must be within 0.05 volt of each other or in accordance with manufacturer's published data.
d. Measure intercell connection resistances.
e. Perform internal ohmic measurement tests. Cell internal ohmic values (resistance, impedance, or conductance) must not vary by more than 25 percent between identical cells that are in a fully charged state.
f. Perform a load test in accordance with manufacturer's published data or IEEE Std 1106. Replace units that fail to pass the test.

g. Measure the battery system voltage from positive to ground and negative to ground. Voltage measured from positive-to-ground must be equal in magnitude to the voltage measured from negative to ground.

L. Switchgear will be considered defective if it does not pass tests and inspections.

M. Nonconforming Work:

1. Remove and replace defective units and retest.

N. Prepare test and inspection reports. Record as-left set points of adjustable devices.

3.5 SYSTEM FUNCTION TESTS

A. System function tests must prove the correct interaction of sensing, processing, and action devices. Perform system function tests after field quality control tests have been completed and components have passed specified tests.

1. Develop test parameters and perform tests for the purpose of evaluating performance of integral components and their functioning as a complete unit within design requirements and manufacturer's published data.
2. Verify the correct operation of interlock safety devices for fail-safe functions in addition to design function.
3. Verify the correct operation of sensing devices, alarms, and indicating devices.

END OF SECTION

SECTION 262213 - LOW-VOLTAGE DISTRIBUTION TRANSFORMERS

PART 1 GENERAL

1.1 SUMMARY

A. Section Includes:
   1. Distribution, dry-type transformers with nominal primary and secondary rating of 600 V and less, with capacities up to 1500 kVA.
B. Related Requirements:
   1. Section 260010 "Supplemental Requirements for Electrical" for additional abbreviations, definitions, submittals, qualifications, testing agencies, and other Project requirements applicable to Work specified in this Section.
   2. Section 260011 "Facility Performance Requirements for Electrical" for seismic-load, wind-load, acoustical, and other field conditions applicable to Work specified in this Section.

1.2 ACTION SUBMITTALS

A. Product Data:
   1. For each type of product.
B. Shop Drawings:
   1. Detail equipment assemblies and indicate dimensions, weights, loads, required clearances, method of field assembly, components, and location and size of field connections.
   2. Vibration Isolation Base Details: Detail fabrication including anchorages and attachments to structure and to supported equipment.
   3. Include diagrams for power, signal, and control wiring.
C. Field Quality-Control Submittals:
   1. Field quality-control reports.

1.3 INFORMATIONAL SUBMITTALS

A. Manufacturers' Published Instructions: Record copy of official installation and testing instructions issued to Installer by manufacturer for the following:
   1. Transformer working clearances, anchoring, torque values, and insulation-resistance testing.
B. Source quality-control reports.

PART 2 PRODUCTS

2.1 GENERAL TRANSFORMER REQUIREMENTS

A. Description: Factory-assembled and -tested, air-cooled units for 60 Hz service.
B. Electrical Components, Devices, and Accessories: Listed and labeled in accordance with NFPA 70, by qualified electrical testing laboratory recognized by authorities having jurisdiction, and marked for intended location and application.
C. Transformers Rated 15 kVA and Larger:
   1. Comply with 10 CFR 431 (DOE 2016) efficiency levels.
   2. Marked as compliant with DOE 2016 efficiency levels by qualified electrical testing laboratory recognized by authorities having jurisdiction.

2.2 DISTRIBUTION TRANSFORMERS

A. Comply with NFPA 70.
B. Cores: Electrical grade, non-aging silicon steel with high permeability and low hysteresis losses.
   1. One leg per phase.
C. Coils: Continuous windings without splices except for taps.

1. Coil Material: Aluminum or Copper.
2. Internal Coil Connections: Brazed or pressure type.
3. Terminal Connections: Welded.

D. Encapsulation: Transformers smaller than 30 kVA must have core and coils completely resin encapsulated.

E. Enclosure: Ventilated.
1. Core and coil must be encapsulated within resin compound to seal out moisture and air.
2. KVA Ratings: Based on convection cooling only and not relying on auxiliary fans.
3. Wiring Compartment: Sized for conduit entry and wiring installation.
4. Environmental Protection:
a. Indoor: UL 50E, Type 2.
b. Outdoor: UL 50E, Type 3R.

F. Taps for Transformers 3 kVA and Smaller: One 5 percent tap above normal full capacity.

G. Taps for Transformers 7.5 to 24 kVA: One 5 percent tap above and one 5 percent tap below normal full capacity.

H. Taps for Transformers 25 kVA and Larger: Two 2.5 percent taps above and two 2.5 percent taps below normal full capacity.

I. Insulation Class, Smaller Than 30 kVA: 180 deg C, UL-component-recognized insulation system with maximum of 115 deg C rise above 40 deg C ambient temperature.

J. Insulation Class, 30 kVA and Larger: 220 deg C, UL-component-recognized insulation system with maximum of 115 deg C rise above 40 deg C ambient temperature.

K. Grounding: Provide ground-bar kit or ground bar installed on inside of transformer enclosure.

2.3 IDENTIFICATION

A. Nameplates:
1. Engraved, laminated-acrylic or melamine plastic signs for distribution transformers, mounted with corrosion-resistant screws. Nameplates and label products are specified in Section 260553 "Identification for Electrical Systems."
2. Self-adhesive label for distribution transformers. Self-adhesive labels are specified in Section 260553 "Identification for Electrical Systems."

PART 3 EXECUTION

3.1 EXAMINATION

A. Examine conditions for compliance with enclosure- and ambient-temperature requirements for transformers.

B. Verify that field measurements are as needed to maintain working clearances required by NFPA 70 and manufacturer's published instructions.

C. Examine walls, floors, roofs, and concrete bases for suitable mounting conditions where transformers will be installed.

D. Verify that ground connections are in place and requirements in Section 260526 "Grounding and Bonding for Electrical Systems" have been met. Maximum ground resistance must be 5 Ω at location of transformer.

E. Environment: Enclosures must be rated for environment in which they are located. Covers for UL 50E, Type 4X enclosures may not cause accessibility problems.

3.2 INSTALLATION

A. Install wall-mounted transformers level and plumb with wall brackets fabricated by transformer manufacturer.
1. Coordinate installation of wall-mounted and structure-hanging supports with actual transformer provided.

B. Construct concrete bases and anchor floor-mounted transformers in accordance with manufacturer's published instructions and requirements in Section 260529 "Hangers and Supports for Electrical Systems."

1. Coordinate size and location of concrete bases with actual transformer provided. Cast anchor-bolt inserts into bases. Concrete, reinforcement, and formwork requirements are specified with concrete.

C. Secure transformer to concrete base in accordance with manufacturer's published instructions.

D. Secure covers to enclosure and tighten bolts to manufacturer-recommended torques to reduce noise generation.

E. Remove shipping bolts, blocking, and wedges.

3.3 CONNECTIONS

A. Ground equipment in accordance with Section 260526 "Grounding and Bonding for Electrical Systems."

B. Connect wiring in accordance with Section 260519 "Low-Voltage Electrical Power Conductors and Cables."

C. Tighten electrical connectors and terminals in accordance with manufacturer's published torque-tightening values. If manufacturer's torque values are not indicated, use those specified in UL 486A-486B.

D. Provide flexible connections at conduit and conductor terminations and supports to eliminate sound and vibration transmission to building structure.

3.4 FIELD QUALITY CONTROL

A. Tests and Inspections:

1. Small (Up to 167 kVA Single-Phase or 500 kVA Three-Phase) Dry-Type Transformer Field Tests:

a. Visual and Mechanical Inspection.

1) Inspect physical and mechanical condition.

2) Inspect anchorage, alignment, and grounding.

3) Verify that resilient mounts are free and that shipping brackets have been removed.

4) Verify that unit is clean.

5) Perform specific inspections and mechanical tests recommended by manufacturer.

6) Verify that as-left tap connections are as specified.

7) Verify presence of surge arresters and that their ratings are as specified.

b. Electrical Tests:

1) Measure resistance at windings, taps, and bolted connections.

2) Perform insulation-resistance tests winding-to-winding and windings-to-ground. Apply voltage in accordance with manufacturer's published data. In absence of manufacturer's published data, comply with NETA ATS, Table 100.5. Calculate polarization index: value of index may not be less than 1.0.

3) Perform turns-ratio tests at tap positions. Test results may not deviate by more than one-half percent from either adjacent coils or calculated ratio. If test fails, replace transformer.

4) Verify correct secondary voltage, phase-to-phase and phase-to-neutral, after energization and prior to loading.

B. Test Labeling: On completion of satisfactory testing of units, attach dated and signed "Satisfactory Test" label to tested components.

C. Nonconforming Work:

1. Transformer will be considered defective if it does not pass tests and inspections.

2. Remove and replace units that do not pass tests or inspections and retest as specified above.

D. Assemble and submit test and inspection reports.

3.5 CLEANING

A. Vacuum dirt and debris; do not use compressed air to assist in cleaning.

END OF SECTION

SECTION 262413 - SWITCHBOARDS

PART 1 GENERAL

1.1 SUMMARY

A. Section Includes:
1. Switchboards.
2. Surge protection devices.
3. Disconnecting and overcurrent protective devices.
4. Instrumentation.
5. Control power.
6. Accessory components and features.

B. Related Requirements
1. Section 260010 "Supplemental Requirements for Electrical" for additional abbreviations, definitions, submittals, qualifications, testing agencies, and other Project requirements applicable to Work specified in this Section.
2. Section 260011 "Facility Performance Requirements for Electrical" for seismic-load, wind-load, acoustical, and other field conditions applicable to Work specified in this Section.
3. Section 260573.19 "Arc-Flash Hazard Analysis" for arc-flash analysis and arc-flash label requirements.

1.2 ACTION SUBMITTALS

A. Product Data:
1. Switchboards.
2. Overcurrent protective devices.
3. Surge protection devices.
4. Groud-fault protection devices.
5. Accessories.
6. Other components.
7. Include dimensions and manufacturers' technical data on features, performance, electrical characteristics, ratings, accessories, and finishes.

B. Shop Drawings: For each switchboard and related equipment.
1. Include dimensioned plans, elevations, sections, and details, including required clearances and service space around equipment. Show tabulations of installed devices, equipment features, and ratings.
2. Detail enclosure types for types other than UL 50E, Type 1.
3. Detail bus configuration, current, and voltage ratings.
4. Detail short-circuit current rating of switchboards and overcurrent protective devices.
5. Include descriptive documentation of optional barriers specified for electrical insulation and isolation.
6. Detail utility company's metering provisions with indication of approval by utility company.
7. Detail features, characteristics, ratings, and factory settings of individual overcurrent protective devices and auxiliary components.
8. Include diagram and details of proposed mimic bus.
9. Include schematic and wiring diagrams for power, signal, and control wiring.

C. Field Quality-Control Submittals:
1. Field Quality-Control Reports:
a. Test procedures used.
b. Test results that comply with requirements.
c. Results of failed tests and corrective action taken to achieve test results that comply with requirements.

1.3 INFORMATIONAL SUBMITTALS

A. Manufacturers' Published Instructions: Record copy of official installation and testing instructions issued to Installer by manufacturer for the following:
   1. Handling, storing, and providing temporary heat.
   2. Mounting accessories and anchoring devices.
   3. Testing and adjusting overcurrent protective devices.
B. Sample warranties.

1.4 CLOSEOUT SUBMITTALS

A. Warranty documentation.

1.5 MAINTENANCE MATERIAL SUBMITTALS

A. Spare Parts: Furnish to Owner spare parts, for repairing switchboards, that are packaged with protective covering for storage on-site and identified with labels describing contents

1.6 WARRANTY

A. Special Installer Extended Warranty: Installer warrants that fabricated and installed switchboard perform in accordance with specified requirements and agrees to repair or replace components that fail to perform as specified within extended-warranty period.
   1. Extended-Warranty Period: Two years from date of Substantial Completion; full coverage for labor, materials, and equipment.
B. Special Manufacturer Extended Warranty: Manufacturer warrants that switchboard performs in accordance with specified requirements and agrees to provide repair or replacement of components that fail to perform as specified within extended-warranty period.
   1. Initial Extended-Warranty Period: Three years from date of Substantial Completion; full coverage for labor, materials, and equipment.
   2. Follow-On Extended-Warranty Period: Five years from date of Substantial Completion; full coverage for materials that failed because of transient voltage surges only, free on board origin, freight prepaid.

PART 2 PRODUCTS

2.1 SWITCHBOARDS

A. Product Selection for Restricted Space: Drawings indicate maximum dimensions for switchboards including clearances between switchboards and adjacent surfaces and other items. Comply with indicated maximum dimensions.
B. Electrical Components, Devices, and Accessories: Listed and labeled in accordance with NFPA 70, by qualified electrical testing laboratory recognized by authorities having jurisdiction, and marked for intended location and application.
C. Comply with NEMA PB 2.
D. Comply with NFPA 70.
E. Comply with UL 891.
F. Front-Connected, Front-Accessible Switchboards:
   1. Main Devices: Panel mounted.
   2. Branch Devices: Panel mounted.
   3. Sections front and rear aligned.
G. Nominal System Voltage: As indicated on drawings.
H. Main-Bus Continuous: As indicated .
I. Indoor Enclosures: Steel, UL 50E, Type 1.
J. Enclosure Finish for Indoor Units: Factory-applied finish in manufacturer's standard gray finish over rust-inhibiting primer on treated metal surface.

K. Service Entrance Rating: Switchboards intended for use as service entrance equipment may contain from one to six service disconnecting means with overcurrent protection, neutral bus with disconnecting link, grounding electrode conductor terminal, and main bonding jumper.

L. Utility Metering Compartment: Barrier compartment and section complying with utility company's requirements; hinged sealable door; buses provisioned for mounting utility company's current transformers and potential transformers or potential taps as required by utility company. If separate vertical section is required for utility metering, match and align with basic switchboard. Provide service entrance label and necessary applicable service entrance features.

M. Bus Transition and Incoming Pull Sections: Matched and aligned with basic switchboard.

N. Hinged Front Panels: Allow access to circuit breaker, metering, accessory, and blank compartments.

O. Pull Box on Top of Switchboard:

1. Adequate ventilation to maintain temperature in pull box within same limits as switchboard.
2. Set back from front to clear circuit-breaker removal mechanism.
3. Removable covers may form top, front, and sides. Top covers at rear must be easily removable for drilling and cutting.
4. Bottom must be insulating, fire-resistive material with separate holes for cable drops into switchboard.
5. Cable supports must be arranged to facilitate cabling and adequate to support cables indicated, including those for future installation.

P. Buses and Connections: Three phase, four wire unless otherwise indicated.

1. Provide phase bus arrangement A, B, C from front to back, top to bottom, and left to right when viewed from front of switchboard.
2. Ground Bus: 1/4 by 2 inch (6 by 50 mm-) Minimum-size required by UL 891, hard-drawn copper of 98 percent conductivity, equipped with compression connectors for feeder and branch-circuit ground conductors.
3. Main-Phase Buses and Equipment-Ground Buses: Uniform capacity for entire length of switchboard's main and distribution sections. Provide for future extensions from both ends.
4. Disconnect Links:
   a. Isolate neutral bus from incoming neutral conductors.
   b. Bond neutral bus to equipment-ground bus for switchboards utilized as service equipment or separately derived systems.
5. Neutral Buses: 100 percent of ampacity of phase buses unless otherwise indicated, equipped with compression connectors for outgoing circuit neutral cables. Brace bus extensions for busway feeder neutral bus.

Q. Future Devices: Equip compartments with mounting brackets, supports, bus connections, and appurtenances at full rating of circuit-breaker compartment.

2.2 SURGE PROTECTION DEVICES

A. SPDs: Listed and labeled in accordance with UL 1449, Type 1.

B. Features and Accessories:

1. Integral disconnect switch.
2. Internal thermal protection that disconnects SPD before damaging internal suppressor components.
3. Indicator light display for protection status.
4. Form-C contacts rated at 5 A and 250 V(ac), one normally open and one normally closed, for remote monitoring of protection status. Contacts must reverse on failure of surge diversion module or on opening of current-limiting device. Coordinate with building power monitoring and control system.
5. Surge counter.

C. Peak Surge Current Rating: Minimum single-pulse surge current withstand rating per phase may not be less than 200 kA. Peak surge current rating must be arithmetic sum of ratings of individual MOVs in each mode.

D. Protection modes and UL 1449 VPR for grounded wye circuits with 480Y/277 V, three-phase, four-wire circuits may not exceed the following:

1. Line to Neutral: 1200 V for 480Y/277 V.
2. Line to Ground: 1200 V for 480Y/277 V.

3. Line to Line: 2000 V for 480Y/277 V.

E. Protection modes and UL 1449 VPR for 240/120 V, single-phase, three-wire circuits may not exceed the following:

1. Line to Neutral: 700 V.
2. Line to Ground: 700 V.
3. Line to Line: 1000 V.

F. SCCR: Equal or exceed 100 kA.

G. Nominal Rating: 20 kA.

2.3 DISCONNECTING AND OVERCURRENT PROTECTIVE DEVICES

A. Molded-Case Circuit Breaker (MCCB): Comply with UL 489, with interrupting capacity to meet available fault currents.

1. Thermal-Magnetic Circuit Breakers: Inverse time-current element for low-level overloads and instantaneous magnetic trip element for short circuits. Adjustable magnetic trip setting for circuit-breaker frame sizes 250 A and larger.
2. Adjustable Instantaneous-Trip Circuit Breakers: Magnetic trip element with front-mounted, field-adjustable trip setting.
3. Electronic trip circuit breakers with RMS sensing; field-replaceable rating plug or field-replicable electronic trip; and the following field-adjustable settings:
   a. Instantaneous trip.
   b. Long- and short-time pickup levels.
   c. Long and short time adjustments.
   d. Ground-fault pickup level, time delay, and I squared t response.
4. Current-Limiting Circuit Breakers: Frame sizes 400 A and smaller; let-through ratings less than NEMA FU 1, RK-5.
5. Integrally Fused Circuit Breakers: Thermal-magnetic trip element with integral limiter-style fuse listed for use with circuit breaker; trip activation on fuse opening or on opening of fuse compartment door.
6. GFCI Circuit Breakers: Single- and double-pole configurations with Class A ground-fault protection (6 mA trip).
7. Ground-Fault Equipment Protection (GFEP) Circuit Breakers: Class B ground-fault protection (30 mA trip).
8. MCCB Features and Accessories:
   a. Standard frame sizes, trip ratings, and number of poles.
   b. Lugs: Compression style, suitable for number, size, trip ratings, and conductor material.
   c. Application Listing: Appropriate for application; Type SWD for switching fluorescent lighting loads; Type HID for feeding fluorescent and high-intensity discharge (HID) lighting circuits.
   d. Ground-Fault Protection: Integrally mounted relay and trip unit with adjustable pickup and time-delay settings, push-to-test feature, and ground-fault indicator.
   e. Auxiliary Contacts: One SPDT switch with "a" and "b" contacts; "a" contacts mimic circuit-breaker contacts, "b" contacts operate in reverse of circuit-breaker contacts.

B. Insulated-Case Circuit Breaker (ICCB): 100 percent rated, sealed, insulated-case power circuit breaker with interrupting capacity rating to meet available fault current.

1. Fixed circuit-breaker mounting.
2. Two-step, stored-energy closing.
3. Standard-function, microprocessor-based trip units with interchangeable rating plug, trip indicators, and the following field-adjustable settings:
   a. Instantaneous trip.
   b. Time adjustments for long- and short-time pickup.
   c. Ground-fault pickup level, time delay, and I squared t response.

2.4 INSTRUMENTATION

A. Instrument Transformers: NEMA EI 21.1, and the following:

1. Potential Transformers: NEMA EI 21.1; 120 V, 60 Hz, single secondary; disconnecting type with integral fuse mountings. Burden and accuracy must be consistent with connected metering and relay devices.
2. Current Transformers: NEMA EI 21.1; 5 A, 60 Hz, secondary; wound type; single secondary winding and secondary shorting device. Burden and accuracy must be consistent with connected metering and relay devices.
3. Control-Power Transformers: Dry type, mounted in separate compartments for units larger than 3 kVA.
4. Current Transformers for Neutral and Ground-Fault Current Sensing: Connect secondary wiring to ground overcurrent relays, via shorting terminals, to provide selective tripping of main and tie circuit breaker. Coordinate with feeder circuit-breaker, ground-fault protection.

B. Multifunction Digital-Metering Monitor: Microprocessor-based unit suitable for three- or four-wire systems and with the following features:
1. Switch-selectable digital display of the following values with maximum accuracy tolerances as indicated:
a. Phase Currents, Each Phase: Plus or minus 0.5 percent.
b. Phase-to-Phase Voltages, Three Phase: Plus or minus 0.5 percent.
c. Phase-to-Neutral Voltages, Three Phase: Plus or minus 0.5 percent.
d. Megawatts: Plus or minus 1 percent.
e. Megavars: Plus or minus 1 percent.
f. Power Factor: Plus or minus 1 percent.
g. Frequency: Plus or minus 0.1 percent.
h. Accumulated Energy, Megawatt Hours: Plus or minus 1 percent; accumulated values unaffected by power outages up to 72 hours.
i. Megawatt Demand: Plus or minus 1 percent; demand interval programmable from five to 60 minutes.
2. Mounting: Display and control unit flush or semiflush mounted in instrument compartment door.

C. Watt-Hour Meters and Wattmeters:
1. Comply with ANSI C12.1.
2. Three-phase induction type with two stators, each with current and potential coil, rated 5 A, 120 V, 60 Hz.
3. Suitable for connection to three- and four-wire circuits.
4. Potential indicating lamps.
5. Adjustments for light and full load, phase balance, and power factor.
6. Four-dial clock register.
7. Ratchets to prevent reverse rotation.
8. Removable meter with drawout test plug.
9. Semiflush mounted case with matching cover.
10. Appropriate multiplier tag.

D. Impulse-Totalizing Demand Meter:
1. Comply with ANSI C12.1.
2. Suitable for use with switchboard watt-hour meter, including two-circuit totalizing relay.
3. Cyclometer.
4. Four-dial, totalizing kilowatt-hour register.
5. Positive chart drive mechanism.
6. Capillary pen holding minimum of one month's ink supply.
7. Roll chart with minimum 31-day capacity; appropriate multiplier tag.
8. Capable of indicating and recording 15-minute integrated demand of totalized system.

2.5 CONTROL POWER

A. Control Circuits: 120 V(ac), supplied through secondary disconnecting devices from control-power transformer.

B. Electrically Interlocked Main and Tie Circuit Breakers: Two control-power transformers in separate compartments, with interlocking relays, connected to primary side of each control-power transformer at line

side of associated main circuit breaker. 120 V secondaries connected through automatic transfer relays to ensure fail-safe automatic transfer scheme.

C. Control-Power Fuses: Primary and secondary fuses for current-limiting and overload protection of transformer and fuses for protection of control circuits.

D. Control Wiring: Factory installed, with bundling, lacing, and protection included. Provide flexible conductors for 8 AWG and smaller, for conductors across hinges, and for conductors for interconnections between shipping units.

2.6 ACCESSORY COMPONENTS AND FEATURES

A. Mounting Accessories: For anchors, mounting channels, bolts, washers, and other mounting accessories, comply with requirements in Section 260548.16 "Seismic Controls for Electrical Systems" or manufacturer's instructions.

PART 3 EXECUTION

3.1 INSTALLATION

A. Comply with manufacturer's published instructions.

B. Reference Standards:

1. Switchboards and Accessories: Unless more stringent requirements are specified in Contract Documents or manufacturers' published instructions, comply with NEMA PB 2.1.
2. Consult Architect for resolution of conflicting requirements.

C. Special Techniques:

1. Equipment Mounting: Install switchboards on concrete base, 4 inch nominal thickness. Comply with requirements for concrete base specified in Section 260529 "Hangers and Supports for Electrical Systems."
   a. Install conduits entering underneath switchboard, entering under vertical section where conductors will terminate. Install with couplings flush with concrete base. Extend 2 inch above concrete base after switchboard is anchored in place.
   b. Install dowel rods to connect concrete base to concrete floor. Unless otherwise indicated, install dowel rods on 18 inch centers around full perimeter of concrete base.
   c. For supported equipment, install epoxy-coated anchor bolts that extend through concrete base and anchor into structural concrete floor.
   d. Place and secure anchorage devices. Use setting drawings, templates, diagrams, published instructions, and directions furnished with items to be embedded.
   e. Install anchor bolts to elevations required for proper attachment to switchboards.
   f. Anchor switchboard to building structure at top of switchboard if required or recommended by manufacturer.
2. Temporary Lifting Provisions: Remove temporary lifting eyes, channels, straps and brackets, and temporary blocking of moving parts from switchboard units and components.
3. Comply with mounting and anchoring requirements specified in Section 260548.16 "Seismic Controls for Electrical Systems."
4. Operating Instructions: Frame and mount printed basic operating instructions for switchboards, including control and key interlocking sequences and emergency procedures. Fabricate frame of finished wood or metal and cover instructions with clear acrylic plastic. Mount on front of switchboards.
5. Install filler plates in unused spaces of panel-mounted sections.
6. Install overcurrent protective devices, surge protection devices, and instrumentation.
   a. Set field-adjustable switches and circuit-breaker trip ranges.

3.2 CONNECTIONS

A. Comply with requirements for terminating feeder bus specified in Section 262500 "Enclosed Bus Assemblies." Drawings indicate general arrangement of bus, fittings, and specialties.

B. Comply with requirements for terminating cable trays specified in Section 260536 "Cable Trays for Electrical Systems." Drawings indicate general arrangement of cable trays, fittings, and specialties.

C. Bond conduits entering underneath switchboard to equipment ground bus with bonding conductor sized in accordance with NFPA 70.

D. Support and secure conductors within switchboard in accordance with NFPA 70.

E. Extend insulated equipment grounding cable to busway ground connection and support cable at intervals in vertical run.

3.3 IDENTIFICATION

A. Identify field-installed conductors, interconnecting wiring, and components; provide warning signs complying with requirements for identification specified in Section 260553 "Identification for Electrical Systems."

B. Switchboard Nameplates: Label each switchboard compartment with nameplate complying with requirements for identification specified in Section 260553 "Identification for Electrical Systems."

C. Device Nameplates: Label each disconnecting and overcurrent protective device and each meter and control device mounted in compartment doors with nameplate complying with requirements for identification specified in Section 260553 "Identification for Electrical Systems."

D. Service Equipment Label: Labeled, by qualified electrical testing laboratory recognized by authorities having jurisdiction, for use as service equipment for switchboards with one or more service disconnecting and overcurrent protective devices.

3.4 FIELD QUALITY CONTROL

A. Field tests and inspections must be witnessed by authorities having jurisdiction.

B. Tests and Inspections:

1. Acceptance Testing:
   a. Test insulation resistance for each switchboard bus, component, connecting supply, feeder, and control circuit. Open control and metering circuits within switchboard, and remove neutral connection to surge protection and other electronic devices prior to insulation test. Reconnect after test.
   b. Test continuity of each circuit.
2. Test ground-fault protection of equipment for service equipment in accordance with NFPA 70.
3. Perform each visual and mechanical inspection and electrical test stated in NETA Acceptance Testing Specification. Certify compliance with test parameters.
4. Correct malfunctioning units on-site where possible, and retest to demonstrate compliance; otherwise, replace with new units and retest.
5. Perform the following infrared scan tests and inspections, and prepare reports:
   a. Initial Infrared Scanning: After Substantial Completion, but not more than 60 days after Final Acceptance, perform infrared scan of each switchboard. Remove front panels so joints and connections are accessible to portable scanner.
   b. Follow-up Infrared Scanning: Perform additional follow-up infrared scan of each switchboard 11 months after date of Substantial Completion.
   c. Instruments and Equipment:
      1) Use infrared scanning device designed to measure temperature or to detect significant deviations from normal values. Provide calibration record for device.
6. Test and adjust controls, remote monitoring, and safeties. Replace damaged and malfunctioning controls and equipment.

C. Nonconforming Work:

1. Switchboard will be considered defective if it does not pass tests and inspections.
2. Remove and replace defective units and retest.

D. Collect, assemble, and submit test and inspection reports, including certified report that identifies switchboards included and that describes scanning results. Include notation of deficiencies detected, remedial action taken, and observations after remedial action.

E. Manufacturer Services:

1. Engage factory-authorized service representative to support field tests and inspections.

END OF SECTION

SECTION 262713 - ELECTRICITY METERING

PART 1 GENERAL

1.1 SUMMARY

A. Section Includes:
   1. Electricity meters.
   2. Work to accommodate utility company revenue meters, and Owner's electricity meters used to manage electrical power system.
B. Related Requirements:
   1. Section 260010 "Supplemental Requirements for Electrical" for additional abbreviations, definitions, submittals, qualifications, testing agencies, and other Project requirements applicable to Work specified in this Section.
   2. Section 260011 "Facility Performance Requirements for Electrical" for seismic-load, wind-load, acoustical, and other field conditions applicable to Work specified in this Section.

1.2 COORDINATION

A. Electrical Service Connections:
   1. Coordinate with utility companies and utility-furnished components.
      a. Comply with requirements of utility providing electrical power services.
      b. Coordinate installation and connection of utilities and services, including provision for electricity-metering components.

1.3 ACTION SUBMITTALS

A. Product Data:
   1. For each type of meter.
   2. For metering infrastructure components.
   3. For metering software.
B. Shop Drawings: For electricity-metering equipment.
   1. Include elevation views of front panels of control and indicating devices and control stations.
   2. Include diagrams for power, signal, and control wiring.
   3. Wire Termination Diagrams and Schedules: Include diagrams for power, signal, and control wiring. Identify terminals and wiring designations and color-codes to facilitate installation, operation, and maintenance. Indicate recommended types, wire sizes, and circuiting arrangements for field-installed wiring, and show circuit protection features. Differentiate between manufacturer-installed and field-installed wiring.
   4. Include series-combination rating data for modular meter centers with main disconnect device.
   5. Block Diagram: Show interconnections between components specified in this Section and devices furnished with power distribution system components. Indicate data communication paths and identify networks, data buses, data gateways, concentrators, and other devices used. Describe characteristics of network and other data communication lines.
C. Field quality-control reports.

1.4 INFORMATIONAL SUBMITTALS

A. Manufacturers' Published Instructions: Record copy of official installation and testing instructions issued to Installer by manufacturer for the following:
   1. Installation of metering equipment.
B. Sample warranties.

1.5 CLOSEOUT SUBMITTALS

A. Warranty documentation.

1.6 WARRANTY

A. Special Installer Extended Warranty: Installer warrants that fabricated and installed metering equipment performs in accordance with specified requirements and agrees to repair or replace components or products that fail to perform as specified within extended-warranty period.
   1. Extended-Warranty Period: Two years from date of Substantial Completion; full coverage for labor, materials, and equipment.

PART 2 PRODUCTS

2.1 SYSTEM DESCRIPTION

A. Electrical Components, Devices, and Accessories: Listed and labeled in accordance with NFPA 70, by qualified electrical testing laboratory recognized by authorities having jurisdiction, and marked for intended location and application.
B. Comply with UL 916.

2.2 UTILITY METERING INFRASTRUCTURE

A. Install metering accessories furnished by utility company, complying with its requirements.
B. Utility-Furnished Meters: Connect data transmission facility of metering equipment installed by Utility.
   1. Data Transmission: Transmit pulse data over control-circuit conductors, classified as Class 1 per NFPA 70, Article 725. Comply with Section 260523 "Control-Voltage Electrical Power Cables."
C. Current-Transformer Cabinets: Comply with requirements of electrical-power utility company.
D. Meter Sockets:
   1. Comply with requirements of electrical-power utility company.
   2. Meter Sockets: Steady-state and short-circuit current ratings must meet indicated circuit ratings.
E. Modular Meter Center: Factory-coordinated assembly of main service disconnect device, wireways, meter socket modules, and feeder circuit breakers arranged in adjacent vertical sections complete with interconnecting buses.
   1. Comply with requirements of utility company for meter center.
      a. Comply with UL 67.
   2. Housing: UL 50E, Type 1 enclosure.
   3. Meter Socket Rating: Coordinated with connected feeder circuit rating.
   4. Minimum Short-Circuit Rating: as indicated on drawings at symmetrical at rated voltage.
   5. Steady-state and short-circuit current ratings must have ratings that match connected circuit ratings.
   6. Main Disconnect Device:
      a. Fusible switch, UL 98 Type GD, series-combination rated by fuse manufacturer to protect downstream feeder and branch circuit breakers. Comply with requirements in Section 262816 "Enclosed Switches and Circuit Breakers." Switch must be operable from outside enclosure to disconnect unit. Configure cover so that it can be opened only when disconnect switch is open.
   7. Surge Protection:
      a. Factory-installed in main disconnect, integrally mounted, UL 1449 Type 1. Comply with Section 264313 "Surge Protection for Low-Voltage Electrical Power Circuits."
F. Arc-Flash Warning Labels;
   1. Comply with requirements for "Arc-Flash Warning Labels" in Section 260573.19 "Arc-Flash Studies." Apply 3-1/2-by-5 inch thermal transfer label of high-adhesion polyester for each work location included in the analysis.

2.3 ELECTRICITY METERS

A. System Description: Able to meter designated activity loads, with or without external alarm, control, and communication capabilities, or other optional features.
B. General Requirements for Meters:

1. Comply with NEMA ANSI C12.1 and NEMA ANSI C12.20, 0.1 accuracy class.
2. Ambient Temperature: Minus 22 deg F to plus 158 deg F (Minus 30 deg C to plus 70 deg C).
3. Humidity: Zero to 95 percent, noncondensing.
4. Capacities and Characteristics:
    a. Circuit: 120/240 V(ac), 100 A.
    b. Measure: kWh, onboard LED display.
    c. Remote-Reading Options: None.
5. Billing Meters Accuracy: 0.2 percent of reading, complying with NEMA ANSI C12.20.
6. Certify that meters comply with NEMA ANSI C12.20 requirements by laboratory accredited by the National Voluntary Laboratory Accreditation Program (((NVLAP))) of the National Institute of Standards and Technology (NIST). Laboratory must use test equipment that is certified annually and is traceable to NIST standards.
7. Enclosure: Supplied by meter manufacturer, UL 50E, Type 1 minimum, with provisions for locking or sealing.
8. Identification: Comply with requirements in Section 260553 "Identification for Electrical Systems."
9. Onboard Nonvolatile Data Storage: kWh, until reset.
10. Sensors: Current-sensing type, supplied by electronic meter manufacturer, with current or voltage output, selected for optimum range and accuracy for meters indicated for this application.
    a. Type: Split and solid core, complying with recommendation of meter manufacturer.

C. kWh Meter: Electronic three-phase meters, measuring electricity use.
1. Voltage and Phase Configuration: Meter must be designed for use on circuits with voltage rating and phase configuration indicated for its application.
2. Display: Digital electromechanical counter, indicating accumulative kWh.

D. KY and KYZ Pulse Totalizer:
1. Pulse Totalizer: Instrument for demand and billing applications where one or more utility revenue meters stream KY or KYZ energy pulses. Instrument must totalize kWh accumulated over user-selected period and must log maximum and minimum kWhd for that period. Record each period with date/time stamp. Time period must be user selected from one to 60 minutes.
    a. Pulse Input: One, individually programmable, KYZ Form C (three-wire) contact pulse channels. Pulse interval, pulse rate, and minimum pulse width must be field adjustable, set for pulse stream provided by utility revenue meter.
    b. Data Totalizing Capacity of Each Channel: Not less than 149 days at 15-minute intervals.
    c. Instrument Power: User selectable, 120 V(ac) and 277 V(ac).
    d. Clock: Line frequency.

E. Remote Reading Options:
1. Pulse Output: KYZ, complete with optical sensor and interface devices.
2. TIA-232 serial interface.
3. TIA-485 serial interface, with Modbus RTU protocol.
4. USB interface.
5. TCP/IP adapter.

F. Data Transmission Cable: Comply with requirements in Section 260523 "Control-Voltage Electrical Power Cables."

PART 3 EXECUTION

3.1 INSTALLATION

A. Comply with manufacturer's published instructions.
B. Reference Standards:
1. Install modular meter center according to switchboard installation requirements in NECA 400.
2. Install arc-flash labels as required by NFPA 70.

C. Special Techniques:

1. Install meters furnished by utility company. Install raceways and equipment according to utility company's published instructions. Provide empty conduits for metering leads and extend grounding connections as required by utility company.
2. Wiring Methods:
    a. Comply with requirements in Section 260519 "Low-Voltage Electrical Power Conductors and Cables" and Section 260533.13 "Conduits for Electrical Systems."
    b. Install unshielded, twisted-pair cable for control and signal transmission conductors, complying with Section 271513 "Communications Copper Horizontal Cabling."
    c. Minimum conduit size is metric designator 16 (trade size 1/2).

3.2 IDENTIFICATION

A. Comply with requirements for identification specified in Section 260553 "Identification for Electrical Systems."
    1. Equipment Identification Labels: Self-adhesive labels with clear protective overlay. For residential meters, provide additional card holder suitable for printed, weather-resistant card with occupant's name.

3.3 FIELD QUALITY CONTROL

A. Field tests and inspections must be witnessed by authorities having jurisdiction.
B. Tests and Inspections:
    1. Equipment and Software Setup:
        a. Set meter date and time clock.
        b. Test, calibrate, and connect pulse metering system.
        c. Set and verify billing demand interval for demand meters.
        d. Report settings and calibration results.
        e. Set up reporting and billing software, insert billing location names and initial constant values and variable needed for billing computations.
    2. Connect load of known power rating, 1.5 kW minimum, to circuit supplied by metered feeder.
    3. Turn off circuits supplied by metered feeder and secure them in off condition.
    4. Run test load continuously for eight hours minimum, or longer, to obtain measurable meter indication. Use test-load placement and setting that ensures continuous, safe operation.
    5. Check and record meter reading at end of test period and compare with actual electricity used, based on test-load rating, duration of test, and sample measurements of supply voltage at test-load connection. Record test results.
    6. Generate test report and billing for each tenant or activity from meter reading tests.
C. Nonconforming Work:
    1. Electricity metering will be considered defective if it does not pass tests and inspections.
    2. Remove and replace defective units and retest.
D. Collect, assemble, and submit test and inspection reports.
E. Manufacturer Services:
    1. Engage factory-authorized service representative to support field tests and inspections.

3.4 PROTECTION

A. After installation, protect metering equipment from construction activities. Remove and replace items that are contaminated, defaced, damaged, or otherwise caused to be unfit for use prior to acceptance by Owner.

END OF SECTION

SECTION 262726 - WIRING DEVICES

PART 1 GENERAL

1.1 SUMMARY

A. Section Includes:
1. General-use switches, dimmer switches, and fan-speed controller switches.
2. General-grade single straight-blade receptacles.
3. General-grade duplex straight-blade receptacles.
4. Hospital-grade straight-blade receptacles.
5. Receptacles with arc-fault and ground-fault protective devices.
6. Locking receptacles.
7. Pin-and-sleeve receptacles.
8. Special-purpose power outlet assemblies.
9. Connectors, cords, and plugs.

B. Related Requirements:
1. Section 260010 "Supplemental Requirements for Electrical" for additional abbreviations, definitions, submittals, qualifications, testing agencies, and other Project requirements applicable to Work specified in this Section.
2. Section 260011 "Facility Performance Requirements for Electrical" for seismic-load, wind-load, acoustical, and other field conditions applicable to Work specified in this Section.
3. Section 013100 "Project Management and Coordination" for preinstallation conference procedures.
4. Section 260923 "Lighting Control Devices" for occupancy sensors, timers, control-voltage switches, and control-voltage dimmers.
5. Section 260936 "Modular Dimming Controls" for multiscene and multipreset dimming controls.
6. Section 260943.16 "Addressable Luminaire Lighting Controls" for network lighting control solid-state devices.
7. Section 260943.23 "Relay-Based Lighting Controls" for network lighting control relay devices.
8. Section 262726.11 "General-Use Switches, Dimmer Switches, and Fan-Speed Controller Switches" for additional wiring device products.
9. Section 262726.31 "General-Grade Single Straight-Blade Receptacles" for additional wiring device products.
10. Section 262726.33 "General-Grade Duplex Straight-Blade Receptacles" for additional wiring device products.
11. Section 262726.35 "Hospital-Grade Straight-Blade Receptacles" for additional wiring device products.
12. Section 262726.37 "Receptacles with Arc-Fault and Ground-Fault Protective Devices" for additional wiring device products.
13. Section 262726.39 "Locking Receptacles" for additional wiring device products.
14. Section 262726.41 "Pin-and-Sleeve Receptacles" for additional wiring device products.
15. Section 262726.43 "Special-Purpose Power Outlet Assemblies" for additional wiring device products.
16. Section 262726.51 "Connectors, Cords, and Plugs" for additional wiring device products.

1.2 ACTION SUBMITTALS

A. Product Data:
1. General-use switches, dimmer switches, and fan-speed controller switches.
2. General-grade single straight-blade receptacles.
3. General-grade duplex straight-blade receptacles.
4. Hospital-grade straight-blade receptacles.
5. Receptacles with arc-fault and ground-fault protective devices.
6. Locking receptacles.

7. Pin-and-sleeve receptacles.
8. Special-purpose power outlet assemblies.
9. Connectors, cords, and plugs.

B. Shop Drawings:
1. Wiring diagrams for duplex straight-blade receptacles with integral switching means.

C. Field quality-control reports.

1.3 INFORMATIONAL SUBMITTALS

A. Manufacturers' Instructions: Record copy of official installation and testing instructions issued to Installer by manufacturer for the following:
1. Dimmers.
2. Fan-speed controllers.
3. Single straight-blade receptacles.
4. Duplex straight-blade receptacles.
5. Duplex straight-blade receptacles with integral switching means.
6. Hospital-grade straight-blade receptacles.
7. Receptacles with AFCI device.
8. Receptacles with AFCI and GFCI devices.
9. Receptacles with GFCI device.
10. Locking receptacles.
11. Pin-and-sleeve receptacles.
12. Spring-driven commercial/industrial-use cord reels.
13. Cord reels for use in hazardous locations.

B. Sample warranties.

1.4 WARRANTY FOR DEVICES

A. Special Manufacturer Extended Warranty: Manufacturer warrants that devices perform in accordance with specified requirements and agrees to provide repair or replacement of devices that fail to perform as specified within extended warranty period.
1. Initial Extended Warranty Period: Three years from date of Substantial Completion; full coverage for labor, materials, and equipment.

PART 2 PRODUCTS

2.1 GENERAL-USE SWITCHES

A. Toggle Switch:
1. Regulatory Requirements:
a. Listed and labeled in accordance with NFPA 70, by qualified electrical testing laboratory recognized by authorities having jurisdiction, and marked for intended location and application.
2. General Characteristics:
a. Reference Standards: UL CCN WMUZ and UL 20.
3. Options:
a. Device Color: White.
b. Configuration:
1) General-duty, 120-277 V, 20 A, single pole.
4. Accessories:
a. Cover Plate: 0.060 inch thick, high-impact thermoplastic (nylon) with smooth finish and color matching wiring device; from same manufacturer as wiring device.
b. Securing Screws for Cover Plate: Metal with head color matching wallplate finish.

2.2 GENERAL-GRADE DUPLEX STRAIGHT-BLADE RECEPTACLES

A. Duplex Straight-Blade Receptacle:
   1. Regulatory Requirements:
      a. Listed and labeled in accordance with NFPA 70, by qualified electrical testing laboratory recognized by authorities having jurisdiction, and marked for intended location and application.
   2. General Characteristics:
      a. Reference Standards: UL CCN RTRT and UL 498.
   3. Options:
      a. Device Color: White.
      b. Configuration:
         1) Heavy-duty, NEMA 5-20R.
   4. Accessories:
      a. Cover Plate: 0.060 inch thick, high-impact thermoplastic (nylon) with smooth finish and color matching wiring device; from same manufacturer as wiring device.
      b. Securing Screws for Cover Plate: Metal with head color matching wallplate finish.

2.3 RECEPTACLES WITH ARC-FAULT AND GROUND-FAULT PROTECTIVE DEVICES

A. General-Grade, Weather-Resistant, Tamper-Resistant Duplex Straight-Blade Receptacle with GFCI Device:
   1. Regulatory Requirements:
      a. Listed and labeled in accordance with NFPA 70, by qualified electrical testing laboratory recognized by authorities having jurisdiction, and marked for intended location and application.
   2. General Characteristics:
      a. Reference Standards: UL CCN KCXS, UL 498, and UL 943.
   3. Options:
      a. Device Color: White.
      b. Configuration: Heavy-duty, NEMA 5-20R.
   4. Accessories:
      a. Cover Plate: 0.060 inch thick, high-impact thermoplastic (nylon) with smooth finish and color matching wiring device; from same manufacturer as wiring device.
      b. Securing Screws for Cover Plate: Metal with head color matching wallplate finish.

2.4 LOCKING RECEPTACLES

A. NEMA, 125 V, Locking Receptacle:
   1. Regulatory Requirements:
      a. Listed and labeled in accordance with NFPA 70, by qualified electrical testing laboratory recognized by authorities having jurisdiction, and marked for intended location and application.
   2. General Characteristics:
      a. Reference Standards: UL CCN RTRT and UL 498.
   3. Options:
      a. Device Color: Black with yellow voltage indication on face.
      b. Configuration: as noted on plans.
B. NEMA, 250 V, Locking Receptacle:
   1. Regulatory Requirements:
      a. Listed and labeled in accordance with NFPA 70, by qualified electrical testing laboratory recognized by authorities having jurisdiction, and marked for intended location and application.
   2. General Characteristics:
      a. Reference Standards: UL CCN RTRT and UL 498.
   3. Options:

a. Device Color: Black with blue voltage indication on face.
b. Configuration: as noted on plans

PART 3 EXECUTION

3.1 EXAMINATION

A. Receptacles:
1. Verify that receptacles to be procured and installed for Owner-furnished equipment are compatible with mating attachment plugs on equipment.
B. Cord Reels:
1. Examine roughing-in for cord reel mounting and power connections to verify actual locations of mounts and power connections before cord reel installation.
2. Examine walls, floors, and ceilings for suitable conditions where cord reel will be installed.
3. Proceed with installation only after unsatisfactory conditions have been corrected.

3.2 INSTALLATION OF SWITCHES

A. Comply with manufacturer's instructions.
B. Reference Standards:
1. Unless more stringent requirements are specified in Contract Documents or manufacturers' instructions, comply with installation instructions in NECA NEIS 130.
2. Mounting Heights: Unless otherwise indicated in Contract Documents, comply with mounting heights recommended in NECA NEIS 1.
3. Consult Architect for resolution of conflicting requirements.
C. Identification:
1. Identify cover or cover plate for device with panelboard identification and circuit number in accordance with Section 260553 "Identification for Electrical Systems."
a. Mark cover or cover plate using hot, stamped, or engraved machine printing with white-filled lettering, and provide durable wire markers or tags inside device box or outlet box.

3.3 INSTALLATION OF STRAIGHT-BLADE RECEPTACLES

A. Comply with manufacturer's instructions.
B. Reference Standards:
1. Unless more stringent requirements are specified in Contract Documents or manufacturers' instructions, comply with installation instructions in NECA NEIS 130.
2. Mounting Heights: Unless otherwise indicated in Contract Documents, comply with mounting heights recommended in NECA NEIS 1.
3. Receptacle Orientation: Unless otherwise indicated in Contract Documents, orient receptacle to match configuration diagram in NEMA WD 6.
a. Hospital-Grade Receptacle Orientation: Orient receptacle with ground pin or neutral pin at top.
4. Consult Architect for resolution of conflicting requirements.
C. Identification:
1. Identify cover or cover plate for device with panelboard identification and circuit number in accordance with Section 260553 "Identification for Electrical Systems."
a. Mark cover or cover plate using hot, stamped, or engraved machine printing with white-filled lettering, and provide durable wire markers or tags inside device box or outlet box.
b. Healthcare Facilities: Distinctively identify covers or cover plates of device boxes and outlet boxes that are supplied from life safety and critical branch power supplies following facility's standard practice.

3.4 INSTALLATION OF LOCKING RECEPTACLES

A. Comply with manufacturer's instructions.

B. Reference Standards:
   1. Unless more stringent requirements are specified in Contract Documents or manufacturers' instructions, comply with installation instructions in NECA NEIS 130.
   2. Mounting Heights: Unless otherwise indicated in Contract Documents, comply with mounting heights recommended in NECA NEIS 1.
   3. Receptacle Orientation: Unless otherwise indicated in Contract Documents, orient receptacle to match configuration diagram in NEMA WD 6.
   4. Consult Architect for resolution of conflicting requirements.
C. Identification:
   1. Identify cover or cover plate for device with panelboard identification and circuit number in accordance with Section 260553 "Identification for Electrical Systems."
      a. Mark cover or cover plate using hot, stamped, or engraved machine printing with white-filled lettering, and provide durable wire markers or tags inside device box or outlet box.

3.5 FIELD QUALITY CONTROL OF SWITCHES

A. Field tests and inspections must be witnessed by authorities having jurisdiction.
B. Tests and Inspections:
   1. Perform tests and inspections in accordance with manufacturers' instructions.
C. Nonconforming Work:
   1. Unit will be considered defective if it does not pass tests and inspections.
   2. Remove and replace defective units and retest.
D. Assemble and submit test and inspection reports.
E. Manufacturer Services:
   1. Engage factory-authorized service representative to support field tests and inspections.

3.6 FIELD QUALITY CONTROL OF STRAIGHT-BLADE RECEPTACLES

A. Field tests and inspections must be witnessed by authorities having jurisdiction.
B. Tests and Inspections:
   1. Insert and remove test plug to verify that device is securely mounted.
   2. Verify polarity of hot and neutral pins.
   3. Measure line voltage.
   4. Measure percent voltage drop.
   5. Measure grounding circuit continuity; impedance must be not greater than 2 ohms.
   6. Perform additional installation and maintenance inspections and diagnostic tests in accordance with NECA NEIS 130 and manufacturers' instructions.
C. Nonconforming Work:
   1. Device will be considered defective if it does not pass tests and inspections.
   2. Remove and replace defective units and retest.
D. Assemble and submit test and inspection reports.
E. Manufacturer Services:
   1. Engage factory-authorized service representative to support field tests and inspections.

3.7 FIELD QUALITY CONTROL OF LOCKING RECEPTACLES

A. Field tests and inspections must be witnessed by authorities having jurisdiction.
B. Tests and Inspections:
   1. Insert and remove test plug to verify that device is securely mounted.
   2. Verify polarity of hot and neutral pins.
   3. Measure line voltage.
   4. Measure percent voltage drop.
   5. Measure grounding circuit continuity; impedance must be not greater than 2 ohms.
   6. Perform additional installation and maintenance inspections and diagnostic tests in accordance with NECA NEIS 130 and manufacturers' instructions.

C. Nonconforming Work:
   1. Device will be considered defective if it does not pass tests and inspections.
   2. Remove and replace defective units and retest.
D. Assemble and submit test and inspection reports.
E. Manufacturer Services:
   1. Engage factory-authorized service representative to support field tests and inspections.

3.8 SYSTEM STARTUP FOR SWITCHES

A. Perform startup service.
   1. Complete installation and startup checks for momentary switches, dimmer switches, and fan-speed controller switches in accordance with manufacturer's instructions.

3.9 ADJUSTING

A. Occupancy Adjustments for Controlled Receptacles: When requested within 12 months from date of Substantial Completion, provide on-site assistance in adjusting system to suit actual occupied conditions. Provide up to two visits to Project during other-than-normal occupancy hours for this purpose.
B. Cord Reels and Fittings: Adjust spring mechanisms and moving parts of cord reels and fittings to function smoothly, and lubricate as recommended in writing by manufacturer.

3.10 PROTECTION

A. Devices:
   1. Schedule and sequence installation to minimize risk of contamination of wires and cables, devices, device boxes, outlet boxes, covers, and cover plates by plaster, drywall joint compound, mortar, cement, concrete, dust, paint, and other materials.
   2. After installation, protect wires and cables, devices, device boxes, outlet boxes, covers, and cover plates from construction activities. Remove and replace items that are contaminated, defaced, damaged, or otherwise caused to be unfit for use prior to acceptance by Owner.
B. Cord Reels and Fittings:
   1. After installation, protect cord reels and fittings from construction activities. Remove and replace items that are contaminated, defaced, damaged, or otherwise caused to be unfit for use prior to acceptance by Owner.
C. Connectors, Cords, and Plugs:
   1. After installation, protect connectors, cords, and plugs from construction activities. Remove and replace items that are contaminated, defaced, damaged, or otherwise caused to be unfit for use prior to acceptance by Owner.

END OF SECTION

SECTION 262813 - FUSES

PART 1 GENERAL

1.1 SUMMARY

A. Section Includes:
   1. Cartridge fuses rated 600 V ac and less for use in the following:
      a. Control circuits.
      b. Motor-control centers.
      c. Panelboards.
      d. Switchboards.
      e. Enclosed controllers.
      f. Enclosed switches.

1.2 ACTION SUBMITTALS

A. Product Data: For each type of product.

1.3 CLOSEOUT SUBMITTALS

A. Operation and maintenance data.

PART 2 PRODUCTS

2.1 CARTRIDGE FUSES

A. Characteristics: NEMA FU 1, current-limiting, nonrenewable cartridge fuses with voltage ratings consistent with circuit voltages.
   1. Type RK-1: 600-V, zero- to 600-A rating, 200 kAIC.
   2. Type RK-5: 600-V, zero- to 600-A rating, 200 kAIC.
   3. Type J: 600-V, zero- to 600-A rating, 200 kAIC.
   4. Type L: 600-V, 601- to 6000-A rating, 200 kAIC.
B. Electrical Components, Devices, and Accessories: Listed and labeled as defined in NFPA 70, by a qualified testing agency, and marked for intended location and application.
C. Comply with NEMA FU 1 for cartridge fuses.
D. Comply with NFPA 70.
E. Coordinate fuse ratings with utilization equipment nameplate limitations of maximum fuse size and with system short-circuit current levels.

PART 3 EXECUTION

3.1 INSTALLATION

A. Install fuses in fusible devices. Arrange fuses so rating information is readable without removing fuse.

3.2 IDENTIFICATION

A. Install labels complying with requirements for identification specified in Section 260553 "Identification for Electrical Systems" and indicating fuse replacement information inside of door of each fused switch and adjacent to each fuse block, socket, and holder.

END OF SECTION

SECTION 262816 - ENCLOSED SWITCHES AND CIRCUIT BREAKERS

PART 1 GENERAL

1.1 SUMMARY

A. Section Includes:
1. Fusible switches.
2. Nonfusible switches.
3. Receptacle switches.
4. Shunt trip switches.
5. Molded-case circuit breakers (MCCBs).
6. Enclosures.

B. Related Requirements:
1. Section 260010 "Supplemental Requirements for Electrical" for additional abbreviations, definitions, submittals, qualifications, testing agencies, and other Project requirements applicable to Work specified in this Section.
2. Section 260011 "Facility Performance Requirements for Electrical" for seismic-load, wind-load, acoustical, and other field conditions applicable to Work specified in this Section.

1.2 DEFINITIONS

A. GFEP: Ground-fault circuit-interrupter for equipment protection.
B. GFLS: Ground-fault circuit-interrupter for life safety.

1.3 ACTION SUBMITTALS

A. Product Data:
1. For each type of enclosed switch, circuit breaker, accessory, and component indicated. Include nameplate ratings, dimensioned elevations, sections, weights, and manufacturers' technical data on features, performance, electrical characteristics, ratings, accessories, and finishes.
2. Enclosure types and details for types other than UL 50E, Type 1.
3. Current and voltage ratings.
4. Short-circuit current ratings (interrupting and withstand, as appropriate).
5. Detail features, characteristics, ratings, and factory settings of individual overcurrent protective devices, accessories, and auxiliary components.
6. Include time-current coordination curves (average melt) for each type and rating of overcurrent protective device; include selectable ranges for each type of overcurrent protective device. Provide in PDF electronic format.

B. Shop Drawings: For enclosed switches and circuit breakers.
1. Include plans, elevations, sections, details, and attachments to other work.
2. Include wiring diagrams for power, signal, and control wiring.

C. Field Quality-Control Submittals:
1. Field quality-control reports.

1.4 INFORMATIONAL SUBMITTALS

A. Sample warranties.

1.5 CLOSEOUT SUBMITTALS

A. Warranty documentation.

1.6 WARRANTY

A. Special Installer Extended Warranty: Installer warrants that fabricated and installed enclosed switches and circuit breakers perform in accordance with specified requirements and agrees to repair or replace components or products that fail to perform as specified within extended-warranty period.
   1. Extended-Warranty Period: Two years from date of Substantial Completion; full coverage for labor, materials, and equipment.

PART 2 PRODUCTS

2.1 GENERAL REQUIREMENTS

A. Product Selection for Restricted Space: Drawings indicate maximum dimensions for enclosed switches and circuit breakers, including clearances between enclosures, and adjacent surfaces and other items. Comply with indicated maximum dimensions.
B. Electrical Components, Devices, and Accessories: Listed and labeled in accordance with NFPA 70, by qualified electrical testing laboratory recognized by authorities having jurisdiction, and marked for intended location and application.

2.2 FUSIBLE SWITCHES

A. Type HD, Heavy Duty:
   1. Single throw.
   2. Three pole.
   3. 600 V(ac).
   4. 1200 A and smaller.
   5. UL 98 and NEMA KS 1, horsepower rated, with clips or bolt pads to accommodate specified fuses.
   6. Lockable handle with capability to accept three padlocks, and interlocked with cover in closed position.
B. Accessories:
   1. Equipment Ground Kit: Internally mounted and labeled for copper and aluminum ground conductors.
   2. Neutral Kit: Internally mounted; insulated, capable of being grounded and bonded; labeled for copper and aluminum neutral conductors.
   3. Isolated Ground Kit: Internally mounted; insulated, labeled for copper and aluminum neutral conductors.
   4. Class R Fuse Kit: Provides rejection of other fuse types when Class R fuses are specified.
   5. Service-Rated Switches: Labeled for use as service equipment.

2.3 NONFUSIBLE SWITCHES

A. Type HD, Heavy Duty, Three Pole, Single Throw, 600 V(ac), 1200 A and Smaller: UL 98 and NEMA KS 1, horsepower rated, lockable handle with capability to accept three padlocks, and interlocked with cover in closed position.
B. Accessories:
   1. Equipment Ground Kit: Internally mounted and labeled for copper and aluminum ground conductors.
   2. Neutral Kit: Internally mounted; insulated, capable of being grounded and bonded; labeled for copper and aluminum neutral conductors.
   3. Class R Fuse Kit: Provides rejection of other fuse types when Class R fuses are specified.

2.4 SHUNT TRIP SWITCHES

A. General Requirements: Comply with ASME A17.1, UL 50, and UL 98, with Class J fuse block and 200 kA interrupting and short-circuit current rating.
B. Type HD, Heavy-Duty, Three Pole, Single-Throw Fusible Switch: 600 V(ac), amperage to meet or exceed the requirements indicated on drawings; UL 98 and NEMA KS 1; integral shunt trip mechanism; horsepower rated, with clips or bolt pads to accommodate specified fuses; lockable handle with capability to accept three padlocks; interlocked with cover in closed position.

C. Control Circuit: 120 V(ac); obtained from integral control power transformer, with primary and secondary fuses with control power transformer of enough capacity to operate shunt trip, pilot, indicating and control devices.

D. Accessories:

1. Mechanically interlocked auxiliary contacts that change state when switch is opened and closed.
2. Three-pole, double-throw, fire-safety and alarm relay; 120 V(ac) coil voltage.
3. Three-pole, double-throw, fire-alarm voltage monitoring relay complying with NFPA 72.
4. Neutral Kit: Internally mounted; insulated, capable of being grounded and bonded; labeled for copper and aluminum neutral conductors.
5. Class R Fuse Kit: Provides rejection of other fuse types when Class R fuses are specified.

2.5 MOLDED-CASE CIRCUIT BREAKERS

A. Circuit breakers must be constructed using glass-reinforced insulating material. Current carrying components must be completely isolated from handle and accessory mounting area.

B. Circuit breakers must have toggle operating mechanism with common tripping of all poles, which provides quick-make, quick-break contact action. Circuit-breaker handle must be over center, be trip free, and reside in tripped position between on and off to provide local trip indication. Circuit-breaker escutcheon must be clearly marked on and off in addition to providing international I/O markings. Equip circuit breaker with push-to-trip button, located on face of circuit breaker to mechanically operate circuit-breaker tripping mechanism for maintenance and testing purposes.

C. MCCBs must be equipped with device for locking in isolated position.

D. Lugs must be suitable for 90 deg C rated wire, sized in accordance with 75 deg C temperature rating in NFPA 70.

E. Standard: Comply with UL 489 with required interrupting capacity for available fault currents.

F. Thermal-Magnetic Circuit Breakers: Inverse time-current thermal element for low-level overloads and instantaneous magnetic trip element for short circuits. Adjustable magnetic trip setting for circuit-breaker frame sizes 250 A and larger.

G. Electronic Trip Circuit Breakers: Field-replaceable rating plug, RMS sensing, with the following field-adjustable settings:

1. Instantaneous trip.
2. Long- and short-time pickup levels.
3. Long- and short-time time adjustments.

H. Current-Limiting Circuit Breakers: Frame sizes 400 A and smaller, and let-through ratings less than NEMA FU 1, RK-5.

1. Auxiliary Contacts: One SPDT switch with "a" and "b" contacts; "a" contacts mimic circuit-breaker contacts, "b" contacts operate in reverse of circuit-breaker contacts.

2.6 ENCLOSURES

A. Enclosed Switches and Circuit Breakers: UL 489, NEMA KS 1, UL 50E, and UL 50, to comply with environmental conditions at installed location.

B. Enclosure Finish: Enclosure must be gray baked enamel paint, electrodeposited on cleaned, phosphatized steel (((UL 50E)) Type 1).

C. Conduit Entry: UL 50E Types 4, 4X, and 12 enclosures may not contain knockouts. UL 50E Types 7 and 9 enclosures must be provided with threaded conduit openings in both endwalls.

D. Operating Mechanism: Circuit-breaker operating handle must be externally operable with operating mechanism being integral part of box, not cover. Cover interlock mechanism must have externally operated override. Override may not permanently disable interlock mechanism, which must return to locked position once override is released. Tool used to override cover interlock mechanism must not be required to enter enclosure in order to override interlock.

E. Enclosures designated as UL 50E Type 4, 4X stainless steel, 12, or 12K must have dual cover interlock mechanism to prevent unintentional opening of enclosure cover when circuit breaker is ON and to prevent turning circuit breaker ON when enclosure cover is open.

F. UL 50E Type 7/9 enclosures must be furnished with breather and drain kit to allow their use in outdoor and wet location applications.

PART 3 EXECUTION

3.1 SELECTION OF ENCLOSURES

A. Indoor, Dry and Clean Locations: UL 50E, Type 1.
B. Outdoor Locations: UL 50E, Type 3R.
C. Other Wet or Damp, Indoor Locations: UL 50E, Type 4.
D. Indoor Locations Subject to Dust, Falling Dirt, and Dripping Noncorrosive Liquids: UL 50E, Type 12.
E. Hazardous Areas Indicated on Drawings: UL 50E, Type 9 with cover attached by Type 316 stainless steel bolts.

3.2 INSTALLATION

A. Comply with manufacturer's published instructions.
B. Special Techniques:
    1. Coordinate layout and installation of switches, circuit breakers, and components with equipment served and adjacent surfaces. Maintain required workspace clearances and required clearances for equipment access doors and panels.
    2. Install individual wall-mounted switches and circuit breakers with tops at uniform height unless otherwise indicated.
    3. Comply with mounting and anchoring requirements specified in Section 260548.16 "Seismic Controls for Electrical Systems."
    4. Temporary Lifting Provisions: Remove temporary lifting of eyes, channels, and brackets and temporary blocking of moving parts from enclosures and components.
    5. Install fuses in fusible devices.

3.3 IDENTIFICATION

A. Comply with requirements in Section 260553 "Identification for Electrical Systems."
    1. Identify field-installed conductors, interconnecting wiring, and components; provide warning signs.
    2. Label each enclosure with engraved metal or laminated-plastic nameplate.

3.4 FIELD QUALITY CONTROL

A. Field tests and inspections must be witnessed by authorities having jurisdiction.
B. Tests and Inspections for Switches:
    1. Visual and Mechanical Inspection:
        a. Inspect physical and mechanical condition.
        b. Inspect anchorage, alignment, grounding, and clearances.
        c. Verify that unit is clean.
        d. Verify blade alignment, blade penetration, travel stops, and mechanical operation.
        e. Verify that fuse sizes and types match the Specifications and Drawings.
        f. Verify that each fuse has adequate mechanical support and contact integrity.
        g. Inspect bolted electrical connections for high resistance using one of the following methods:
            1) Use low-resistance ohmmeter.
                (a) Compare bolted connection resistance values to values of similar connections. Investigate values that deviate from those of similar bolted connections by more than 50 percent of lowest value.
            2) Verify tightness of accessible bolted electrical connections by calibrated torque-wrench method in accordance with manufacturer's published data or NETA ATS Table 100.12.
                (a) Bolt-torque levels must be in accordance with manufacturer's published data. In absence of manufacturer's published data, use NETA ATS Table 100.12.
        h. Verify that operation and sequencing of interlocking systems is as described in the Specifications and shown on Drawings.
        i. Verify correct phase barrier installation.
        j. Verify lubrication of moving current-carrying parts and moving and sliding surfaces.

2. Electrical Tests:
    a. Perform resistance measurements through bolted connections with low-resistance ohmmeter. Compare bolted connection resistance values to values of similar connections. Investigate values that deviate from adjacent poles or similar switches by more than 50 percent of lowest value.
    b. Measure contact resistance across each switchblade fuseholder. Drop values may not exceed high level of manufacturer's published data. If manufacturer's published data are not available, investigate values that deviate from adjacent poles or similar switches by more than 50 percent of lowest value.
    c. Perform insulation-resistance tests for one minute on each pole, phase-to-phase and phase-to-ground with switch closed, and across each open pole. Apply voltage in accordance with manufacturer's published data. In absence of manufacturer's published data, use Table 100.1 from NETA ATS. Investigate values of insulation resistance less than those published in Table 100.1 or as recommended in manufacturer's published data.
    d. Measure fuse resistance. Investigate fuse-resistance values that deviate from each other by more than 15 percent.
    e. Perform ground fault test in accordance with NETA ATS Section 7.14 "Ground Fault Protection Systems, Low-Voltage."

C. Tests and Inspections for Molded-Case Circuit Breakers:
1. Visual and Mechanical Inspection:
    a. Verify that equipment nameplate data are as described in the Specifications and shown on Drawings.
    b. Inspect physical and mechanical condition.
    c. Inspect anchorage, alignment, grounding, and clearances.
    d. Verify that unit is clean.
    e. Operate circuit breaker to ensure smooth operation.
    f. Inspect bolted electrical connections for high resistance using one of the following methods:
        1) Use low-resistance ohmmeter.
            (a) Compare bolted connection resistance values to values of similar connections. Investigate values that deviate from those of similar bolted connections by more than 50 percent of lowest value.
        2) Verify tightness of accessible bolted electrical connections by calibrated torque-wrench method in accordance with manufacturer's published data or NETA ATS Table 100.12.
            (a) Bolt-torque levels must be in accordance with manufacturer's published data. In absence of manufacturer's published data, use NETA ATS Table 100.12.
    g. Inspect operating mechanism, contacts, and chutes in unsealed units.
    h. Perform adjustments for final protective device settings in accordance with coordination study.
2. Electrical Tests:
    a. Perform resistance measurements through bolted connections with low-resistance ohmmeter. Compare bolted connection resistance values to values of similar connections. Investigate values that deviate from adjacent poles or similar switches by more than 50 percent of lowest value.
    b. Perform insulation-resistance tests for one minute on each pole, phase-to-phase and phase-to-ground with circuit breaker closed, and across each open pole. Apply voltage in accordance with manufacturer's published data. In absence of manufacturer's published data, use Table 100.1 from NETA ATS. Investigate values of insulation resistance less than those published in Table 100.1 or as recommended in manufacturer's published data.
    c. Perform contact/pole resistance test. Drop values may not exceed high level of manufacturer's published data. If manufacturer's published data are not available, investigate values that deviate from adjacent poles or similar switches by more than 50 percent of lowest value.
    d. Perform insulation resistance tests on control wiring with respect to ground. Applied potential must be 500 V(dc) for 300 V rated cable and 1000 V(dc) for 600 V rated cable. Test duration must be one minute. For units with solid state components, follow manufacturer's recommendation. Insulation resistance values may be no less than 2 MΩ.
    e. Determine the following by primary current injection:

1) Long-time pickup and delay. Pickup values must be as specified. Trip characteristics may not exceed manufacturer's published time-current characteristic tolerance band, including adjustment factors.
2) Short-time pickup and delay. Short-time pickup values must be as specified. Trip characteristics may not exceed manufacturer's published time-current characteristic tolerance band, including adjustment factors.
3) Ground-fault pickup and time delay. Ground-fault pickup values must be as specified. Trip characteristics may not exceed manufacturer's published time-current characteristic tolerance band, including adjustment factors.
4) Instantaneous pickup. Instantaneous pickup values must be as specified and within manufacturer's published tolerances.

f. Test functionality of trip unit by means of primary current injection. Pickup values and trip characteristics must be as specified and within manufacturer's published tolerances.

g. Perform minimum pickup voltage tests on shunt trip and close coils in accordance with manufacturer's published data. Minimum pickup voltage of shunt trip and close coils must be as indicated by manufacturer.

h. Verify correct operation of auxiliary features such as trip and pickup indicators; zone interlocking; electrical close and trip operation; trip-free, anti-pump function; and trip unit battery condition. Reset trip logs and indicators. Investigate units that do not function as designed.

i. Verify operation of charging mechanism. Investigate units that do not function as designed.

3. Test and adjust controls, remote monitoring, and safeties.

D. Nonconforming Work:

1. Enclosed switches and circuit breakers will be considered defective if they do not pass tests and inspections.
2. Remove and replace defective units and retest.

E. Collect, assemble, and submit test and inspection reports.

1. Test procedures used.
2. Include identification of each enclosed switch and circuit breaker tested and describe test results.
3. List deficiencies detected, remedial action taken, and observations after remedial action.

F. Manufacturer Services:

1. Engage factory-authorized service representative to support field tests and inspections.

3.5 ADJUSTING

A. Adjust moving parts and operable components to function smoothly, and lubricate as recommended by manufacturer.

B. Set field-adjustable circuit-breaker trip ranges as specified in Section 260573.16 "Coordination Studies."

END OF SECTION

SECTION 262913.03 - MANUAL AND MAGNETIC MOTOR CONTROLLERS

PART 1 GENERAL

1.1 SUMMARY

A. Section Includes:
1. Manual motor controllers.
2. Enclosed full-voltage magnetic motor controllers.
3. Enclosed reduced-voltage magnetic motor controllers.
4. Multispeed magnetic motor controllers.
5. Enclosures.
6. Accessories.
7. Identification.

1.2 ACTION SUBMITTALS

A. Product Data: For each type of product.
B. Shop Drawings: For each type of magnetic controller.
1. Include plans, elevations, sections, and mounting details.
2. Indicate dimensions, weights, required clearances, and location and size of each field connection.
3. Wire Termination Diagrams and Schedules: Include diagrams for signal, and control wiring. Identify terminals and wiring designations and color-codes to facilitate installation, operation, and maintenance. Indicate recommended types, wire sizes, and circuiting arrangements for field-installed wiring, and show circuit protection features. Differentiate between manufacturer-installed and field-installed wiring.
4. Include features, characteristics, ratings, and factory settings of individual overcurrent protective devices and auxiliary components.

1.3 INFORMATIONAL SUBMITTALS

A. Seismic Qualification Data: Certificates, for magnetic controllers, from manufacturer.
B. Field quality-control reports.

1.4 CLOSEOUT SUBMITTALS

A. Operation and maintenance data.

1.5 QUALITY ASSURANCE

A. Testing Agency Qualifications: Accredited by NETA.
1. Testing Agency's Field Supervisor: Certified by NETA to supervise on-site testing.

PART 2 PRODUCTS

2.1 PERFORMANCE REQUIREMENTS

A. Electrical Components, Devices, and Accessories: Listed and labeled as defined in NFPA 70, by a qualified testing agency, and marked for intended location and use.
B. UL Compliance: Fabricate and label magnetic motor controllers to comply with UL 508 and UL 60947-4-1.
C. NEMA Compliance: Fabricate motor controllers to comply with ICS 2.

2.2 MANUAL MOTOR CONTROLLERS

A. Motor-Starting Switches (MSS): "Quick-make, quick-break" toggle or push-button action; marked to show whether unit is off or on.

1. Standard: Comply with NEMA ICS 2, general purpose, Class A.
2. Configuration: Nonreversing.
3. Surface mounting.

B. Fractional Horsepower Manual Controllers (FHPMC): "Quick-make, quick-break" toggle or push-button action; marked to show whether unit is off, on, or tripped.
1. Configuration: Nonreversing.
2. Overload Relays: Inverse-time-current characteristics; NEMA ICS 2, Class 10 tripping characteristics; heaters matched to nameplate full-load current of actual protected motor; external reset push button; bimetallic type.
3. Overload Relays: NEMA ICS 2, bimetallic class as schedule on Drawings.

2.3 ENCLOSED FULL-VOLTAGE MAGNETIC MOTOR CONTROLLERS

A. Description: Across-the-line start, electrically held, for nominal system voltage of 600-V ac and less.
B. Standard: Comply with NEMA ICS 2, general purpose, Class A.
C. Configuration: Nonreversing.
D. Contactor Coils: Pressure-encapsulated type.
1. Operating Voltage: Manufacturer's standard, unless indicated.

E. Control Power:
1. For on-board control power, obtain from line circuit or from integral CPT. The CPT shall have capacity to operate integral devices and remotely located pilot, indicating, and control devices.
a. Spare CPT Capacity: 100 VA.

F. Overload Relays:
1. Thermal Overload Relays:
a. Inverse-time-current characteristic.
b. Class 10 tripping characteristic.
c. Heaters in each phase shall be matched to nameplate full-load current of actual protected motor and with appropriate adjustment for duty cycle.
d. Ambient compensated.
e. Automatic resetting.
2. Solid-State Overload Relay:
a. Switch or dial selectable for motor-running overload protection.
b. Sensors in each phase.
c. Class 10 tripping characteristic selected to protect motor against voltage and current unbalance and single phasing.

G. Digital communication module, using RS-485 Modbus, RTU protocol, 2-wire connection to host devices with a compatible port to transmit the following to the LAN:
1. Instantaneous rms current each phase, and 3-phase average.
2. Voltage: L-L for each phase, L-L 3-phase average, L-N each phase and L-N 3-phase average - rms.
3. Active Energy (kWh): 3-phase total.
4. Power Factor: Each phase and 3-phase total.

2.4 ENCLOSED REDUCED-VOLTAGE MAGNETIC MOTOR CONTROLLERS

A. Description: Electrically held; closed-transition; adjustable time delay on transition, 600-V ac or less.
B. Standard: Comply with NEMA ICS 2, general purpose, Class A.
C. Configuration:
1. Wye-Delta Controller: Four contactors, with a three-phase starting resistor/reactor bank.
2. Part-Winding Controller: Separate START and RUN contactors, field-selectable for 1/2- or 2/3-winding start mode, with either six- or nine-lead motors; with separate overload relays for starting and running sequences.
3. Autotransformer Reduced-Voltage Controller: Medium-duty service, with integral overtemperature protection; taps for starting at 50, 65, and 80 percent of line voltage; two START and one RUN contactors.

D. Contactor Coils: Pressure-encapsulated type.
   1. Operating Voltage: Manufacturer's standard, unless indicated.
E. Control Power: 24-V ac; obtained from integral CPT, with primary and secondary fuses, with CPT of sufficient capacity to operate integral devices and remotely located pilot, indicating, and control devices.
   1. Spare CPT Capacity: 100 VA.
F. Overload Relays:
   1. Thermal Overload Relays: Melting alloy type.
      a. Inverse-time-current characteristic.
      b. Class 10 tripping characteristic.
      c. Heaters in each phase matched to nameplate full-load current of actual protected motor and with appropriate adjustment for duty cycle.
      d. Ambient compensated.
      e. Automatic resetting.
   2. Solid-State Overload Relay:
      a. Switch or dial selectable for motor-running overload protection.
      b. Sensors in each phase.
      c. Class 10 tripping characteristic selected to protect motor against voltage and current unbalance and single phasing.
G. Digital Communication Module: RS-485 Modbus, RTU protocol, 2-wire connection to host devices with a compatible port to transmit the following to the LAN:
   1. Instantaneous rms current each phase, and 3-phase average.
   2. Voltage: L-L for each phase, L-L 3-phase average, L-N each phase and L-N 3-phase average - rms.
   3. Active Energy (kWh): 3-phase total.
   4. Power Factor: Each phase and 3-phase total.

2.5 ENCLOSURES

A. Comply with NEMA 250, type designations as indicated on Drawings, complying with environmental conditions at installed location.
B. The construction of the enclosures shall comply with NEMA ICS 6.

2.6 ACCESSORIES

A. General Requirements for Control Circuit and Pilot Devices: NEMA ICS 5; factory installed in controller enclosure cover unless otherwise indicated.
   1. Push Buttons, Pilot Lights, and Selector Switches: Standard-duty, except as needed to match enclosure type. Heavy-duty or oil-tight where indicated in the controller schedule.
      a. Push Buttons: As indicated in the controller schedule.
      b. Pilot Lights: As indicated in the controller schedule.
   2. Elapsed Time Meters: Heavy duty with digital readout in hours; nonresettable.
   3. Meters: Panel type, 2-1/2-inch (64-mm) minimum size with 90- or 120-degree scale and plus or minus two percent accuracy. Where indicated, provide selector switches with an off position.
B. Motor protection relays shall be with solid-state sensing circuit and isolated output contacts for hardwired connections.
   1. Phase-failure.
   2. Phase-reversal, with bicolor LED to indicate normal and fault conditions. Automatic reset when phase reversal is corrected.
   3. Under/overvoltage, operate when the circuit voltage reaches a preset value, and drop out when the operating voltage drops to a level below the preset value. Include adjustable time-delay setting.

2.7 IDENTIFICATION

A. Controller Nameplates: Baked enamel signs, as described in Section 260553 "Identification for Electrical Systems," for each compartment, mounted with corrosion-resistant screws.
B. Arc-Flash Warning Labels:

1. Comply with requirements in Section 260573.19 "Arc-Flash Hazard Analysis." Produce a 3.5-by-5-inch (89-by-127-mm) self-adhesive equipment label for each work location included in the analysis.
2. Comply with requirements in Section 260553 "Identification for Electrical Systems." Produce a 3.5-by-5-inch (89-by-127-mm) self-adhesive equipment label for each work location included in the analysis. Labels shall be machine printed, with no field-applied markings.
    a. The label shall have an orange header with the wording, "WARNING, ARC-FLASH HAZARD," and shall include the following information taken directly from the arc-flash hazard analysis:
        1) Location designation.
        2) Nominal voltage.
        3) Flash protection boundary.
        4) Hazard risk category.
        5) Incident energy.
        6) Working distance.
        7) Engineering report number, revision number, and issue date.
    b. Labels shall be machine printed, with no field-applied markings.

PART 3 EXECUTION

3.1 INSTALLATION

A. Comply with NECA 1.
B. Wall-Mounted Controllers: Install magnetic controllers on walls with tops at uniform height indicated, and by bolting units to wall or mounting on lightweight structural-steel channels bolted to wall. For controllers not at walls, provide freestanding racks complying with Section 260529 "Hangers and Supports for Electrical Systems" unless otherwise indicated.
C. Floor-Mounted Controllers: Install controllers on cast-in-place concrete equipment base(s). Comply with requirements for equipment bases and foundations specified in Section 033000 "Cast-in-Place Concrete."
D. Comply with requirements for seismic control devices specified in Section 260548.16 "Seismic Controls for Electrical Systems."
E. Maintain minimum clearances and workspace at equipment according to manufacturer's written instructions and NFPA 70.
F. Wiring within Enclosures: Bundle, lace, and train conductors to terminal points with no excess and without exceeding manufacturer's limitations on bending radii. Install lacing bars and distribution spools.
G. Setting of Overload Relays: Select and set overloads on the basis of full-load current rating as shown on motor nameplate. Adjust setting value for special motors as required by NFPA 70 for motors that are high-torque, high-efficiency, and so on.

3.2 IDENTIFICATION

A. Identify system components, wiring, cabling, and terminals. Comply with requirements for identification specified in Section 260553 "Identification for Electrical Systems."

3.3 FIELD QUALITY CONTROL

A. Perform tests and inspections with the assistance of a factory-authorized service representative.
B. Tests and Inspections:
    1. Comply with the provisions of NFPA 70B, "Testing and Test Methods" Chapter.
    2. Visual and Mechanical Inspection:
        a. Compare equipment nameplate data with drawings and specifications.
        b. Inspect physical and mechanical condition.
        c. Inspect anchorage, alignment, and grounding.
        d. Verify the unit is clean.
        e. Inspect contactors:
            1) Verify mechanical operation.

2) Verify contact gap, wipe, alignment, and pressure are according to manufacturer's published data.

f. Motor-Running Protection:

1) Verify overload element rating is correct for its application.

2) If motor-running protection is provided by fuses, verify correct fuse rating.

g. Inspect bolted electrical connections for high resistance using one of the two following methods:

1) Use a low-resistance ohmmeter. Compare bolted connection resistance values with values of similar connections. Investigate values that deviate from those of similar bolted connections by more than 50 percent of the lowest value.

2) Verify tightness of accessible bolted electrical connections by calibrated torque-wrench method according to manufacturer's published data or NETA ATS Table 100.12. Bolt-torque levels shall be according to manufacturer's published data. In the absence of manufacturer's published data, use NETA ATS Table 100.12.

h. Verify appropriate lubrication on moving current-carrying parts and on moving and sliding surfaces.

3. Electrical Tests:

a. For the contactor and circuit breaker, perform insulation-resistance tests for one minute on each pole, phase-to-phase and phase-to-ground with switch closed, and across each open pole. Insulation-resistance values shall be according to manufacturer's published data or NETA ATS Table 100.1. In the absence of manufacturer's published data, use Table 100.5. Values of insulation resistance less than those of this table or manufacturer's recommendations shall be investigated and corrected.

b. Measure fuse resistance. Investigate fuse-resistance values that deviate from each other by more than 15 percent.

c. Test motor protection devices according to manufacturer's published data.

d. Test circuit breakers as follows:

1) Operate the circuit breaker to ensure smooth operation.

2) For adjustable circuit breakers, adjust protective device settings according to the coordination study. Comply with coordination study recommendations.

e. Perform operational tests by initiating control devices.

C. Motor controller will be considered defective if it does not pass tests and inspections.

D. Prepare test and inspection reports.

3.4 SYSTEM FUNCTION TESTS

A. System function tests shall prove the correct interaction of sensing, processing, and action devices. Perform system function tests after field quality control tests have been completed and all components have passed specified tests.

1. Develop test parameters and perform tests for the purpose of evaluating performance of integral components and their functioning as a complete unit within design requirements and manufacturer's published data.

2. Verify the correct operation of interlock safety devices for fail-safe functions in addition to design function.

3. Verify the correct operation of sensing devices, alarms, and indicating devices.

B. Motor controller will be considered defective if it does not pass the system function tests and inspections.

C. Prepare test and inspection reports.

3.5 DEMONSTRATION

A. Engage a factory-authorized service representative to train Owner's maintenance personnel to adjust, operate, and maintain switchgear.

END OF SECTION

SECTION 262923 - VARIABLE-FREQUENCY MOTOR CONTROLLERS

PART 1 GENERAL

1.1 SUMMARY

A. Section includes separately enclosed, preassembled, combination VFCs, rated 600 V and less, for speed control of three-phase, squirrel-cage induction motors.
B. Related Requirements:
   1. Section 262419 "Motor-Control Centers" for VFCs installed in motor-control centers.

1.2 DEFINITIONS

A. CE: Conformite Europeene (European Compliance).
B. CPT: Control power transformer.
C. DDC: Direct digital control.
D. EMI: Electromagnetic interference.
E. OCPD: Overcurrent protective device.
F. PID: Control action, proportional plus integral plus derivative.
G. RFI: Radio-frequency interference.
H. VFC: Variable-frequency motor controller.

1.3 ACTION SUBMITTALS

A. Product Data: For each type and rating of VFC indicated.
B. Shop Drawings: For each VFC indicated.
   1. Include details of equipment assemblies. Indicate dimensions, weights, loads, required clearances, method of field assembly, components, and location and size of each field connection.
   2. Include diagrams for power, signal, and control wiring.

1.4 INFORMATIONAL SUBMITTALS

A. Qualification Data: For testing agency.
B. Seismic Qualification Data: Certificates, for each VFC, accessories, and components, from manufacturer.
   1. Certificate of compliance.
   2. Dimensioned Outline Drawings of Equipment Unit: Identify center of gravity and locate and describe mounting and anchorage provisions.
   3. Detailed description of equipment anchorage devices on which the certification is based, and their installation requirements.
C. Product certificates.
D. Field quality-control reports.

1.5 CLOSEOUT SUBMITTALS

A. Operation and maintenance data.

1.6 QUALITY ASSURANCE

A. Testing Agency Qualifications: Member company of NETA or an NRTL.

1.7 WARRANTY

A. Special Warranty: Manufacturer agrees to repair or replace VFCs that fail in materials or workmanship within specified warranty period.
   1. Warranty Period: Five years from date of Substantial Completion.

PART 2 PRODUCTS

2.1 SYSTEM DESCRIPTION

A. General Requirements for VFCs:
   1. VFCs and Accessories: Listed and labeled as defined in NFPA 70, by a qualified testing agency, and marked for intended location and application.
   2. Comply with NEMA ICS 7, NEMA ICS 61800-2, and UL 508A.
B. Application: Constant torque and variable torque.
C. VFC Description: Variable-frequency motor controller, consisting of power converter that employs pulse-width-modulated inverter, factory built and tested in an enclosure, with integral disconnecting means and overcurrent and overload protection; listed and labeled by an NRTL as a complete unit; arranged to provide self-protection, protection, and variable-speed control of one or more three-phase induction motors by adjusting output voltage and frequency.
   1. Units suitable for operation of NEMA MG 1 motors.
   2. Listed and labeled for integrated short-circuit current (withstand) rating by an NRTL acceptable to authorities having jurisdiction.
D. Design and Rating: Match load type, such as fans, blowers, and pumps; and type of connection used between motor and load such as direct or through a power-transmission connection.
E. Output Rating: Three phase; 10 to 60 Hz, with voltage proportional to frequency throughout voltage range; maximum voltage equals input voltage.
F. Unit Operating Requirements:
   1. Input AC Voltage Tolerance: Plus 10 and minus 10 percent of VFC input voltage rating.
   2. Input AC Voltage Unbalance: Not exceeding 3 percent.
   3. Input Frequency Tolerance: Plus or minus 3 percent of VFC frequency rating.
   4. Minimum Efficiency: 96 percent at 60 Hz, full load.
   5. Minimum Displacement Primary-Side Power Factor: 96 percent under any load or speed condition.
   6. Minimum Short-Circuit Current (Withstand) Rating: 22 kA.
   7. Ambient Temperature Rating: Not less than 32 deg F (0 deg C) and not exceeding 104 deg F (40 deg C).
   8. Humidity Rating: Less than 95 percent (noncondensing).
   9. Altitude Rating: Not exceeding 3300 feet.
   10. Vibration Withstand: Comply with NEMA ICS 61800-2.
   11. Overload Capability: 1.5 times the base load current for 60 seconds; minimum of 1.8 times the base load current for three seconds.
   12. Starting Torque: Minimum 100 percent of rated torque from 3 to 60 Hz.
   13. Speed Regulation: Plus or minus 5 percent.
   14. Output Carrier Frequency: Selectable; 0.5 to 15 kHz.
   15. Stop Modes: Programmable; includes fast, free-wheel, and dc injection braking.
G. Inverter Logic: Microprocessor based, 32 bit, isolated from all power circuits.
H. Isolated Control Interface: Allows VFCs to follow remote-control signal over a minimum 40:1 speed range.
   1. Signal: Electrical.
I. Internal Adjustability Capabilities:
   1. Minimum Speed: 5 to 25 percent of maximum rpm.
   2. Maximum Speed: 80 to 100 percent of maximum rpm.
   3. Acceleration: 0.1 to 999.9 seconds.
   4. Deceleration: 0.1 to 999.9 seconds.
   5. Current Limit: 30 to minimum of 150 percent of maximum rating.
J. Self-Protection and Reliability Features:
   1. Surge Suppression: Factory installed as an integral part of the VFC, complying with UL 1449 SPD, Type 1 or Type 2.
   2. Loss of Input Signal Protection: Selectable response strategy, including speed default to a percent of the most recent speed, a preset speed, or stop; with alarm.
   3. Under- and overvoltage trips.

4. Inverter overcurrent trips.
5. VFC and Motor-Overload/Overtemperature Protection: Microprocessor-based thermal protection system for monitoring VFCs and motor thermal characteristics, and for providing VFC overtemperature and motor-overload alarm and trip; settings selectable via the keypad.
6. Critical frequency rejection, with three selectable, adjustable deadbands.
7. Instantaneous line-to-line and line-to-ground overcurrent trips.
8. Loss-of-phase protection.
9. Reverse-phase protection.
10. Short-circuit protection.
11. Motor-overtemperature fault.

K. Automatic Reset/Restart: Attempt three restarts after drive fault or on return of power after an interruption and before shutting down for manual reset or fault correction; adjustable delay time between restart attempts.

L. Power-Interruption Protection: To prevent motor from re-energizing after a power interruption until motor has stopped, unless "Bidirectional Autospeed Search" feature is available and engaged.

M. Bidirectional Autospeed Search: Capable of starting VFC into rotating loads spinning in either direction and returning motor to set speed in proper direction, without causing damage to drive, motor, or load.

N. Torque Boost: Automatically varies starting and continuous torque to at least 1.5 times the minimum torque to ensure high-starting torque and increased torque at slow speeds.

O. Motor Temperature Compensation at Slow Speeds: Adjustable current fall-back based on output frequency for temperature protection of self-cooled, fan-ventilated motors at slow speeds.

P. Integral Input Disconnecting Means and OCPD: UL 489, molded-case switch, with power fuse block and current-limiting fuses with pad-lockable, door-mounted handle mechanism.
1. Disconnect Rating: Not less than 115 percent of NFPA 70 motor full-load current rating or VFC input current rating, whichever is larger.
2. Auxiliary Contacts: NO or NC, arranged to activate before switch blades open.
3. Auxiliary contacts "a" and "b" arranged to activate with circuit-breaker handle.
4. NC alarm contact that operates only when circuit breaker has tripped.

2.2 PERFORMANCE REQUIREMENTS

A. Seismic Performance: VFCs shall withstand the effects of earthquake motions determined according to ASCE/SEI 7. The designated VFCs shall be tested and certified by an NRTL as meeting the ICC-ES AC156 test procedure requirements.
1. The term "withstand" means "the unit will remain in place without separation of any parts when subjected to the seismic forces specified."

2.3 CONTROLS AND INDICATION

A. Status Lights: Door-mounted LED indicators displaying the following conditions:
1. Power on.
2. Run.
3. Overvoltage.
4. Line fault.
5. Overcurrent.
6. External fault.

B. Panel-Mounted Operator Station: Manufacturer's standard front-accessible, sealed keypad and plain-English-language digital display; allows complete programming, program copying, operating, monitoring, and diagnostic capability.
1. Keypad: In addition to required programming and control keys, include keys for HAND, OFF, and AUTO modes.
2. Security Access: Provide electronic security access to controls through identification and password with at least one level of access: View only; view and operate; and view, operate, and service.
a. Control Authority: Supports at least four conditions: Off, local manual control at VFC, local automatic control at VFC, and automatic control through a remote source.

C. Historical Logging Information and Displays:

1. Real-time clock with current time and date.
2. Running log of total power versus time.
3. Total run time.
4. Fault log, maintaining last four faults with time and date stamp for each.

D. Indicating Devices: Digital display and additional readout devices as required, mounted flush in VFC door and connected to display VFC parameters including, but not limited to:
1. Output frequency (Hz).
2. Motor speed (rpm).
3. Motor status (running, stop, fault).
4. Motor current (amperes).
5. Motor torque (percent).
6. Fault or alarming status (code).
7. PID feedback signal (percent).
8. DC-link voltage (V dc).
9. Set point frequency (Hz).
10. Motor output voltage (V ac).

E. Control Signal Interfaces:
1. Electric Input Signal Interface:
a. A minimum of two programmable analog inputs: 0- to 10-V dc.
b. A minimum of six multifunction programmable digital inputs.
2. Remote Signal Inputs: Capability to accept any of the following speed-setting input signals from the DDC system for HVAC or other control systems:
a. 0- to 10-V dc.
b. 4- to 20-mA dc.
c. Potentiometer using up/down digital inputs.
d. Fixed frequencies using digital inputs.
3. Output Signal Interface: A minimum of one programmable analog output signal(s) (0- to 10-V dc), which can be configured for any of the following:
a. Output frequency (Hz).
b. Output current (load).
c. DC-link voltage (V dc).
d. Motor torque (percent).
e. Motor speed (rpm).
f. Set point frequency (Hz).

F. PID Control Interface: Provides closed-loop set point, differential feedback control in response to dual feedback signals. Allows for closed-loop control of fans and pumps for pressure, flow, or temperature regulation.
1. Number of Loops: One.

2.4 BYPASS SYSTEMS

A. Bypass Operation: Manually transfers motor between power converter output and bypass circuit. Unit is capable of stable operation (starting, stopping, and running) with motor completely disconnected from power converter.

B. Bypass Mode: Manual operation only; requires local operator selection at VFC. Transfer between power converter and bypass contactor, and retransfer shall only be allowed with the motor at zero speed.

C. Bypass Controller: Two-contactor-style bypass allows motor operation via the power converter or the bypass controller; with input isolating switch and barrier arranged to isolate the power converter and permit safe troubleshooting and testing, both energized and de-energized, while motor is operating in bypass mode.
1. Bypass Contactor: Load-break, NEMA-rated contactor.
2. Output Isolating Contactor: Non-load-break, NEMA-rated contactor.
3. Isolating Switch: Non-load-break switch arranged to isolate power converter and permit safe troubleshooting and testing of the power converter, both energized and de-energized, while motor is operating in bypass mode; pad-lockable, door-mounted handle mechanism.

D. Bypass Contactor Configuration: Full-voltage (across-the-line) type.
   1. NORMAL/BYPASS selector switch.
   2. HAND/OFF/AUTO selector switch.
   3. NORMAL/TEST Selector Switch: Allows testing and adjusting of VFC while the motor is running in the bypass mode.
   4. Contactor Coils: Pressure-encapsulated type with coil transient suppressors.
      a. Operating Voltage: Depending on contactor NEMA size and line-voltage rating, manufacturer's standard matching control power or line voltage.
      b. Power Contacts: Totally enclosed, double break, and silver-cadmium oxide; assembled to allow inspection and replacement without disturbing line or load wiring.
   5. Control Circuits: 120-V ac; obtained from integral CPT, with primary and secondary fuses, with CPT of sufficient capacity to operate all integral devices and remotely located pilot, indicating, and control devices.
      a. CPT Spare Capacity: 100 VA.
   6. Overload Relays: NEMA ICS 2.

2.5 OPTIONAL FEATURES

A. Damper control circuit with end-of-travel feedback capability.
B. Communication Port: RS-232 port, USB 2.0 port, or equivalent connection capable of connecting a printer.

2.6 ENCLOSURES

A. VFC Enclosures: NEMA 250, to comply with environmental conditions at installed location.
   1. Dry and Clean Indoor Locations: Type 1.
   2. Outdoor or Wet Locations: Type 3R.
B. Plenum Rating: UL 1995; NRTL certification label on enclosure, clearly identifying VFC as "Plenum Rated."

2.7 ACCESSORIES

A. General Requirements for Control-Circuit and Pilot Devices: NEMA ICS 5; factory installed in VFC enclosure cover unless otherwise indicated.
   1. Push Buttons: Covered.
   2. Pilot Lights: Push to test.
   3. Selector Switches: Rotary type.
B. NC bypass contactor auxiliary contact(s).
C. Control Relays: Auxiliary and adjustable solid-state time-delay relays.
D. Phase-Failure, Phase-Reversal, and Undervoltage and Overvoltage Relays: Solid-state sensing circuit with isolated output contacts for hard-wired connections. Provide adjustable undervoltage, overvoltage, and time-delay settings.
   1. Current Transformers: Continuous current rating, basic impulse insulating level (BIL) rating, burden, and accuracy class suitable for connected circuitry. Comply with IEEE C57.13.
E. Supplemental Digital Meters:
   1. Elapsed-time meter.
   2. Kilowatt meter.
   3. Kilowatt-hour meter.
F. Breather and drain assemblies, to maintain interior pressure and release condensation in NEMA 250, Type 4X enclosures installed outdoors or in unconditioned interior spaces subject to humidity and temperature swings.
G. Space heaters, with NC auxiliary contacts, to mitigate condensation in NEMA 250, Type 3R enclosures installed outdoors or in unconditioned interior spaces subject to humidity and temperature swings.
H. Cooling Fan and Exhaust System: For NEMA 250, Type 1; UL 508 component recognized: Supply fan, with composite intake and exhaust grills and filters; 120-V ac; obtained from integral CPT.

PART 3 EXECUTION

3.1 INSTALLATION

A. Wall-Mounting Controllers: Install with tops at uniform height and with disconnect operating handles not higher than 79 inches above finished floor, unless otherwise indicated, and by bolting units to wall or mounting on lightweight structural-steel channels bolted to wall. For controllers not on walls, provide freestanding racks complying with Section 260529 "Hangers and Supports for Electrical Systems."

B. Roof-Mounting Controllers: Install VFC on roofs with tops at uniform height and with disconnect operating handles not higher than 79 inches above finished roof surface unless otherwise indicated, and by bolting units to curbs or mounting on freestanding, lightweight, structural-steel channels bolted to curbs. Seal roof penetrations after raceways are installed.

1. Curbs and roof penetrations are specified in Section 077200 "Roof Accessories."
2. Structural-steel channels are specified in Section 260529 "Hangers and Supports for Electrical Systems."

C. Seismic Bracing: Comply with requirements specified in Section 260548.16 "Seismic Controls for Electrical Systems."

D. Temporary Lifting Provisions: Remove temporary lifting eyes, channels, and brackets and temporary blocking of moving parts from enclosures and components.

E. Install fuses in each fusible-switch VFC.

F. Install fuses in control circuits if not factory installed. Comply with requirements in Section 262813 "Fuses."

G. Install heaters in thermal-overload relays. Select heaters based on actual nameplate full-load amperes after motors are installed.

H. Install, connect, and fuse thermal-protector monitoring relays furnished with motor-driven equipment.

I. Comply with NECA 1.

3.2 CONTROL WIRING INSTALLATION

A. Install wiring between VFCs and remote devices and facility's central-control system. Comply with requirements in Section 260523 "Control-Voltage Electrical Power Cables."

B. Bundle, train, and support wiring in enclosures.

3.3 IDENTIFICATION

A. Identify VFCs, components, and control wiring. Comply with requirements for identification specified in Section 260553 "Identification for Electrical Systems."

1. Identify field-installed conductors, interconnecting wiring, and components; provide warning signs.
2. Label each VFC with engraved nameplate.
3. Label each enclosure-mounted control and pilot device.

3.4 FIELD QUALITY CONTROL

A. Perform tests and inspections with the assistance of a factory-authorized service representative.

B. Acceptance Testing Preparation:

1. Test insulation resistance for each VFC element, bus, component, connecting supply, feeder, and control circuit.
2. Test continuity of each circuit.

C. Tests and Inspections:

1. Inspect VFC, wiring, components, connections, and equipment installation. Test and adjust controllers, components, and equipment.
2. Test insulation resistance for each VFC element, component, connecting motor supply, feeder, and control circuits.
3. Test continuity of each circuit.
4. Verify that voltages at VFC locations are within 10 percent of motor nameplate rated voltages. If outside this range for any motor, notify Owner before starting the motor(s).
5. Test each motor for proper phase rotation.

6. Perform tests according to the Inspection and Test Procedures for Adjustable Speed Drives stated in NETA Acceptance Testing Specification. Certify compliance with test parameters.
7. Correct malfunctioning units on-site, where possible, and retest to demonstrate compliance; otherwise, replace with new units and retest.
8. Test and adjust controls, remote monitoring, and safeties. Replace damaged and malfunctioning controls and equipment.

D. VFCs will be considered defective if they do not pass tests and inspections.

E. Prepare test and inspection reports, including a certified report that identifies the VFC and describes scanning results. Include notation of deficiencies detected, remedial action taken, and observations made after remedial action.

3.5 ADJUSTING

A. Program microprocessors for required operational sequences, status indications, alarms, event recording, and display features. Clear events memory after final acceptance testing and prior to Substantial Completion.

B. Set field-adjustable switches, auxiliary relays, time-delay relays, timers, and overload-relay pickup and trip ranges.

C. Adjust the trip settings of instantaneous-only circuit breakers and thermal-magnetic circuit breakers with adjustable, instantaneous trip elements. Initially adjust to 6 times the motor nameplate full-load amperes and attempt to start motors several times, allowing for motor cool-down between starts. If tripping occurs on motor inrush, adjust settings in increments until motors start without tripping. Do not exceed 8 times the motor full-load amperes (or 11 times for NEMA Premium Efficient motors if required). Where these maximum settings do not allow starting of a motor, notify Owner before increasing settings.

D. Set the taps on reduced-voltage autotransformer controllers.

E. Set field-adjustable circuit-breaker trip ranges as specified in Section 260573 "Power System Studies."

F. Set field-adjustable pressure switches.

3.6 DEMONSTRATION

A. Train Owner's maintenance personnel to adjust, operate, reprogram, and maintain VFCs.

END OF SECTION

SECTION 263323.11 - CENTRAL BATTERY EQUIPMENT FOR EMERGENCY LIGHTING

PART 1 GENERAL

1.1 SUMMARY

A. Section Includes:
   1. Interruptible (fast-transfer) central battery equipment.
   2. Optional and accessory features.

1.2 DEFINITIONS

A. Interruptible: As used in the Section Text, an off-line, passive-standby or line-interactive, inverter-only unit, with an intentional interruption of power to the load until an internal transfer switch picks up and transfers the load to the unit's inverter and internal battery source on loss of the "normal" source, and then retransfers to the "normal" source when it is restored. Transfer time can be "slow" (up to approximately 1 second) or "fast" (2-4 ms or 40-50 ms, depending on manufacturer).
B. Low Voltage: As defined in NFPA 70 for circuits and equipment operating at less than 50 V or for remote-control, signaling power-limited circuits.

1.3 ACTION SUBMITTALS

A. Product Data: For each type and rating of central battery equipment unit.
B. Shop Drawings: For each type and rating of central battery equipment unit.
   1. Include plans, elevations, sections, and mounting details.
   2. Include details of equipment assemblies. Indicate dimensions, weights, loads, required clearances, ventilation requirements, method of field assembly, components, and location and size of each field connection.
   3. Include system one-line diagram, internal and interconnecting wiring; and diagrams for power, signal, and control wiring.
   4. Include elevation, details, and legends of control and indication displays.
   5. Include -circuit current (withstand) rating of unit.

1.4 INFORMATIONAL SUBMITTALS

A. Coordination Drawings: Floor plans, drawn to scale, showing dimensioned layout, required working clearances, and required area above and around central battery equipment.
B. Qualification Data: For testing agency.
C. Seismic Qualification Data: For central battery equipment, accessories, and components, from manufacturer.
D. Field quality-control reports.
E. Sample Warranty: For special warranty.

1.5 CLOSEOUT SUBMITTALS

A. Operation and maintenance data.

1.6 QUALITY ASSURANCE

A. Testing Agency Qualifications: Member company of NETA or an NRTL acceptable to authorities having jurisdiction.
   1. Testing Agency's Field Supervisor: Certified by NETA to supervise on-site testing.

1.7 WARRANTY

A. Special Warranty: Manufacturer agrees to repair or replace central battery equipment that fails in materials or workmanship within specified warranty period. Special warranty, applying to batteries only, applies to materials only, on a prorated basis, for period specified.

1. Warranty Period: Include the following warranty periods, from date of Substantial Completion:
    a. Central Battery Equipment (excluding Batteries): One year(s).
    b. Premium VRLA Batteries:
        1) Full Warranty: One ???Insert number??? year(s).
        2) Pro Rata: 19 ???Insert number??? years.

PART 2 PRODUCTS

2.1 PERFORMANCE REQUIREMENTS

A. Seismic Performance: Central battery equipment shall withstand the effects of earthquake motions determined according to ASCE/SEI 7. The designated central battery equipment shall be tested and certified by an NRTL as meeting ICC-ES AC156 test procedure requirements.
    1. The term "withstand" means "the unit will remain in place without separation of any parts from the device when subjected to the seismic forces specified and the unit will be fully operational after the seismic event."

2.2 INTERRUPTIBLE (FAST-TRANSFER) CENTRAL BATTERY EQUIPMENT

A. General Requirements for Interruptible (Fast-Transfer) Central Battery Equipment:
    1. Electrical Components, Devices, and Accessories: Listed and labeled as defined in NFPA 70, by a qualified testing agency, and marked for intended location and application.
    2. NRTL Compliance: Fabricate and label central battery equipment to comply with UL 924 and UL 1778.
    3. Comply with the IBC, NFPA 70, and NFPA 101.
    4. Comply with NEMA PE 1.
B. Performance Requirements:
    1. Fast-Transfer Central Battery Equipment: Passive standby (off-line) system. Automatically sense loss of normal ac supply and use a solid-state static switch to transfer load. Transfer in 2-4 ms or less from normal supply to battery-inverter supply.
    2. Automatic Operation:
        a. Normal Conditions: Supply the load with ac power flowing from normal ac power input terminals, bypassing inverter, with battery connected in parallel via rectifier/charger output.
        b. Abnormal Supply Conditions: If normal ac supply deviates from specified voltage, transfer switch operates and battery supplies constant, regulated ac power through the inverter to the load, with a momentary loss of power to the load.
        c. If normal power fails, transfer switch operates and battery supplies constant, regulated ac power through the inverter to the load, with a momentary loss of power to the load.
        d. If a fault occurs in system when being supplied by inverter and current flows in excess of the overload rating of inverter, inverter automatically protects itself against damage from overloads and short circuits by shutting down.
        e. When normal ac power is restored at input supply terminals of unit, controls automatically retransfer the load back to the normal ac supply, with a momentary loss of power to the load. Rectifier/charger then recharges battery.
        f. If normal power failure is prolonged (more than 90 minutes), integral low-voltage battery protective circuit disconnects battery and prevents battery from damage due to deep discharge.
        g. If battery becomes discharged, and when normal ac supply is again available, rectifier/charger recharges battery. When battery is fully charged, rectifier/charger automatically shifts to float-charge mode.
        h. If battery is disconnected, and normal ac power is available, central battery equipment continues to supply power to the load with no degradation of its regulation of voltage and frequency of output bus.
C. Unit Operating Requirements:
    1. Input AC Voltage Tolerance: Plus 10 and minus 15 percent of central battery equipment input voltage rating.

2. Input Frequency Tolerance: Plus or minus 3 percent of central battery equipment frequency rating.
3. Synchronizing Slew Rate: 1 Hz per second, maximum.
4. Minimum Off-Line Efficiency: 95 percent at 60 Hz, full load.
5. Minimum Displacement Primary-Side Power Factor: 96 percent under any load or operating condition.
6. Ambient Temperature Rating (Other Than Batteries): Not less than 68 deg F (20 deg C) and not exceeding 86 deg F (30 deg C).
7. Ambient Storage Temperature Rating (Other Than Batteries): Not less than minus 4 deg F (minus 20 deg C) and not exceeding 158 deg F (70 deg C).
8. Ambient Storage Temperature Rating (Batteries): Not less than 0 deg F (minus 18 deg C) and not exceeding 104 deg F (40 deg C).
9. Humidity Rating: Less than 95 percent (noncondensing).
10. Altitude Rating: Not exceeding 3300 feet.
11. Off-Line Overload Capability: 1.5 times the base load current for 60 seconds; minimum of 1.8 times the base load current for three seconds.

D. Inverter and Controls Logic: Microprocessor based, isolated from all power circuits; provides complete self-diagnostics, periodic automatic testing and reporting; with alarms.

E. Controls and Indication:
1. Status Indication: Door-mounted, labeled LED indicators or digital screen displaying the following conditions:
   a. Normal power available.
   b. Status of system.
   c. Battery charging status.
   d. On battery power.
   e. System fault.
   f. External fault.
   g. ???Insert condition???.
2. Panel-Mounted Operator Station: Manufacturer's standard front-accessible, sealed keypad and plain-English language digital display; allows complete programming, program copying, operating, monitoring, and diagnostic capability.
   a. Keypad: In addition to required programming and control keys, include the following:
      1) Keys for METER, CONTROL, PROGRAM, and CLEAR modes.
      2) Security Access: Provide electronic security access to controls through identification and password with at least two levels of access: View only; and view, operate, and service.
      3) Control Authority: Supports at least three conditions: Off, local manual control at unit and local automatic control at unit.
   b. Digital Display: Plain-English language messages on a digital display; provide the following historical logging information and displays:
      1) Real-time clock with current time and date.
      2) Tests and Events Logs: Record and store up to 25 tests and events.
         (a) Dates.
         (b) Times.
         (c) Durations.
         (d) Output voltage and currents.
      3) Alarm Logs: Record and store up to 50 alarms.
         (a) Dates.
         (b) Times.
         (c) Alarm type.
      4) Metering Functions: Display central battery equipment metering parameters including, but not limited to, the following:
         (a) Input and output voltage (V ac) and output current (A ac).
         (b) Battery voltage (V dc) and current (A ac).
         (c) Fault or alarming status (code).
         (d) Power output (VA).
         (e) Inverter load (W).

(f) Ambient temperature (deg F).
(g) System run time (cumulative days).
(h) Inverter run time (cumulative minutes).

5) Alarm Functions: Digital display mounted flush in unit door and connected to display central battery equipment parameters including, but not limited to, the following:
(a) High/low battery charge voltage.
(b) High/low input voltage.
(c) Battery nearing low-voltage condition.
(d) Battery low voltage.
(e) High ambient temperature.
(f) Inverter fault.
(g) Output fault.
(h) Output overload.

3. Remote Signal Interfaces:
a. Remote Indication Interface: A minimum of one programmable (Form C) dry-circuit relay output(s) (120-V ac, 2 A) for remote indication of the following:
1) Fault or status indication.
2) On bypass.
3) Low battery.
b. Communications Interface: Factory-installed hardware and software to enable a remote PC to program central battery equipment and monitor and display status and alarms using RS-232 port.

F. Self-Protection and Reliability Features:
1. Input surge protection by means of SPDs to provide protection against damage from supply voltage surges as defined in IEEE C62.45, Category B and C.
2. Integral, programmable, self-diagnostic and self-test circuitry; with alarms and logging.
3. Battery deep-discharge and self-discharge protection; with alarms.
4. Battery self-test circuitry; with alarms and logging.

G. Integral Input Disconnecting Means and OCPD: Thermal-magnetic circuit breaker, complying with UL 489.
1. Integrated Equipment Minimum Short-Circuit Current (Withstand) Rating: 22kA.

H. Inverter:
1. Description: Solid-state, high-frequency, PWM type, with the following operational features:
a. Automatically regulate output voltage to within plus or minus 3 percent, for all load ranges and for maximum 25 percent step-load changes; regulation may increase to 8 percent for 100 percent step-load changes.
b. Automatically regulate output frequency to within plus or minus 1 Hz, from no load to full load, at unity power factor, over the operating range of battery voltage.
c. Output Voltage Waveform: Sine wave with maximum 3 percent TDD throughout battery operating-voltage range, for 100 percent linear load.
d. Inverter Overload Capability: 115 percent for 10 minutes; 150 percent surge for 10 seconds.
e. Load Power Factor: 0.5 lead to 0.5 lag.

I. Batteries:
1. Description: Premium VRLA batteries.
a. Capable of sustaining full-capacity output of inverter unit for minimum of 90 minutes.
2. Battery Disconnect and OCPD: Manufacturer's standard.

J. Maintenance Bypass Systems:
1. Maintenance Bypass Mode, Internal: Manual operation only; bypasses central battery equipment power circuits (inverter and static transfer switch); requires local operator selection at central battery equipment. Transfer and retransfer shall be make-before-break, without disrupting power to the load or causing system instabilities.
2. Bypass Overload Capability: 1.5 times the base load current.

K. Integral Output Disconnecting Means and OCPD:
1. Multiple-Output OCPDs: Thermal-magnetic circuit breakers, complying with UL 489; voltage rating matching unit output voltage rating; 20 A, single pole.
a. Normally Closed: with trip alarm; with time delay.

2.3 OPTIONAL AND ACCESSORY FEATURES

A. Factory-Installed Options and Accessories:
   1. Auto-dialer.
   2. Audible alarm with silencer switch.
   3. Remote Summary Alarm Panel: Labeled LEDs on panel faceplate shall indicate five basic status conditions. Audible signal indicates alarm conditions; silencing switch in face of panel silences signal without altering visual indication.
      a. Cabinet and Faceplate: Surface or flush mounted to suit mounting conditions indicated.
      b. Maximum Distance from Main Unit: 1000 feet.

PART 3 EXECUTION

3.1 INSTALLATION, GENERAL

A. Coordinate layout and installation of central battery equipment with other construction including conduit, piping, equipment, and adjacent surfaces. Maintain required workspace clearances and required clearances for equipment access doors and panels.

B. Wall-Mounted Central Battery Equipment: Install central battery equipment on walls with tops at uniform height and with disconnect operating handles not higher than 79 inches above finished floor unless otherwise indicated, and by bolting units to wall or mounting on lightweight structural-steel channels bolted to wall. For units not on walls, provide freestanding racks complying with Section 260529 "Hangers and Supports for Electrical Systems."

C. Floor-Mounted Central Battery Equipment: Install central battery equipment on 4-inch (100-mm) nominal-thickness concrete base. Comply with requirements for concrete base specified in Section 033000 "Cast-in-Place Concrete."
   1. Install dowel rods to connect concrete base to concrete floor. Unless otherwise indicated, install dowel rods on 18-inch (450-mm) centers around the full perimeter of concrete base.
   2. For supported equipment, install epoxy-coated anchor bolts that extend through concrete base and anchor into structural concrete floor.
   3. Place and secure anchorage devices. Use setting drawings, templates, diagrams, instructions, and directions furnished with items to be embedded.
   4. Install anchor bolts to elevations required for proper attachment to supported equipment.

D. Seismic Bracing: Comply with requirements specified in Section 260548 "Vibration and Seismic Controls for Electrical Systems."

E. Temporary Lifting Provisions: Remove temporary lifting eyes, channels, and brackets and temporary blocking of moving parts from enclosures and components.

F. Comply with NECA 1.

G. Wiring Method:
   1. Install cables in raceways. Conceal raceway and cables except in unfinished spaces.
   2. Conceal conductors and cables in accessible ceilings, walls, and floors where possible.

H. Wiring within Enclosures: Bundle, lace, and train conductors to terminal points with no excess and without exceeding manufacturer's limitations on bending radii. Install lacing bars and distribution spools.

I. Ground equipment according to Section 260526 "Grounding and Bonding for Electrical Systems."
   1. Separately Derived Systems: Make grounding connections to grounding electrodes and bonding connections to metallic piping systems as indicated; comply with NFPA 70.

J. Install control wiring between central battery equipment and remote devices and facility's central-control system. Comply with requirements in Section 260523 "Control-Voltage Electrical Power Cables."

K. Identify central battery equipment, components, and control wiring. Comply with requirements for identification specified in Section 260553 "Identification for Electrical Systems."

3.2 FIELD QUALITY CONTROL

A. Manufacturer's Field Service: Engage a factory-authorized service representative to test and inspect components, assemblies, and equipment installations, including connections.

B. Perform tests and inspections.

C. Tests and Inspections:
   1. Inspect central battery equipment, wiring, components, connections, and equipment installation. Test and adjust components and equipment.
   2. Test insulation resistance for all external branch circuit, feeder, control, and alarm wiring connected to central battery equipment element and component.
   3. Test continuity of each circuit.
   4. Perform each visual and mechanical inspection and electrical test stated in manufacturer's written instructions and in NETA Acceptance Testing Specification, including specifically those for batteries, battery chargers, and UPS, regardless of the type of central battery equipment provided. Certify compliance with test parameters.
   5. Perform a load-duration test at rated voltage and rated output current to verify the correct functional operation of the unit under full-load stable operating conditions for the minimum time limits required by UL 924. Monitor and record ambient temperature and temperatures within the unit.
   6. Correct malfunctioning units on-site, where possible, and retest to demonstrate compliance; otherwise, replace with new units and retest.
   7. Test and adjust controls, remote monitoring, and safeties. Replace damaged and malfunctioning controls and equipment.
D. Central battery equipment will be considered defective if it does not pass tests and inspections.
E. Prepare test and inspection reports, including a certified report that identifies central battery equipment and describes all test results. Include notation of deficiencies detected, remedial action taken, and observations made after remedial action.

3.3 DEMONSTRATION

A. Engage a factory-authorized service representative to train Owner's maintenance personnel to adjust, operate, and maintain central battery equipment, and to use and reprogram microprocessor-based control, monitoring, and display functions.

END OF SECTION

SECTION 263353 - STATIC UNINTERRUPTIBLE POWER SUPPLY

PART 1 GENERAL

1.1 SUMMARY

A. Section Includes:
   1. Three-phase, on-line, double-conversion, static-type, UPS units with the following features:
      a. Surge suppression.
      b. Rectifier-charger.
      c. Inverter.
      d. Controls and indications.
      e. Static bypass transfer switch.
      f. Output distribution section.
      g. Battery and battery disconnect device.

1.2 ACTION SUBMITTALS

A. Product Data: For each type of UPS.
B. Shop Drawings: For UPS.
   1. Include plans, elevations, sections, and mounting details.
   2. Include details of equipment assemblies. Indicate dimensions, weights, loads, required clearances, method of field assembly, components, and location and size of each field connection.
   3. Show access, workspace, and clearance requirements; details of control panels; and battery arrangement.
   4. Include diagrams for power, signal, and control wiring.

1.3 INFORMATIONAL SUBMITTALS

A. Seismic Qualification Certificates: For UPS equipment, from manufacturer.
B. Product Certificates: For each product, from manufacturer.
C. Factory test reports.
D. Product test reports.
E. Field quality-control reports.
F. Sample warranties.

1.4 CLOSEOUT SUBMITTALS

A. Operation and maintenance data.

1.5 QUALITY ASSURANCE

A. Power Quality Specialist Qualifications: A registered professional electrical engineer or engineering technician, currently certified by the National Institute for Certification in Engineering Technologies, NICET Level 4, minimum, experienced in performance testing UPS installations and in performing power quality surveys similar to that required in "Performance Testing" Article.
B. Testing Agency Qualifications: Accredited by NETA.
   1. Testing Agency's Field Supervisor: Certified by NETA to supervise on-site testing.

1.6 WARRANTY

A. Special Battery Warranties: Manufacturer and Installer agree to repair or replace UPS system storage batteries that fail in materials or workmanship within specified warranty period.
B. Special UPS Warranties: Specified form in which manufacturer and Installer agree to repair or replace components that fail in materials or workmanship within special warranty period.
   1. Special Warranty Period: Two years from date of Substantial Completion.

PART 2 PRODUCTS

2.1 OPERATIONAL REQUIREMENTS

A. Automatic operation includes the following:
   1. Double Conversion, IGBT:
      a. Normal Conditions: Load is supplied with power flowing from the normal power input terminals, through the rectifier-charger and inverter, with the battery connected in parallel with the rectifier-charger output. High-efficiency carrier stored trench IGBT, in both rectifier-charger and inverter circuits, provides a minimum of 97 percent efficiency for the UPS system at full load and a minimum of 94 percent efficiency at 50 percent load.
      b. Abnormal Supply Conditions: If normal supply deviates from specified and adjustable voltage, voltage waveform, or frequency limits, the battery supplies energy to provide constant, regulated inverter power output to the load.
      c. Power Failure: If normal power fails, the rectifier-charger and inverter use energy from the battery to supply constant, regulated power output to the load without switching or disturbance.
   2. When power is restored at the normal supply terminals of the system, controls shall automatically synchronize the inverter with the external source before transferring the load. The rectifier-charger shall supply power to the load through the inverter and simultaneously recharge the battery.
   3. If the battery becomes discharged and normal supply is available, the rectifier-charger shall charge the battery. The rectifier-charger shall automatically shift to float-charge mode on reaching full charge.
   4. If any element of the UPS system fails and power is available at the normal supply terminals of the system, the static bypass transfer switch shall switch the load to the normal ac supply circuit without disturbance or interruption.
   5. The output power converters shall produce up to 300 percent of rated full-load current for short-circuit clearing. The inverter shall sustain steady-state overload conditions of up to 200 percent of rated full-load current for 60 seconds in normal operation.
   6. The inverter shall be capable of sustaining 150 percent of system capacity for 30 seconds while powered from the battery.
   7. Should overloads persist past the time limitations, the automatic static transfer switch shall switch the load to the bypass output of the UPS. When the fault has cleared, the static bypass transfer switch shall return the load to the UPS system.
   8. If the battery is disconnected, the UPS shall supply power to the load from the normal supply with no degradation of its regulation of voltage and frequency of the output bus.
B. Manual operation includes the following:
   1. Turning the inverter off causes the static bypass transfer switch to transfer the load directly to the normal ac supply circuit without disturbance or interruption.
   2. Turning the inverter on causes the static bypass transfer switch to transfer the load to the inverter.
C. Maintenance Bypass/Isolation Switch Operation: Switch is interlocked so it cannot be operated unless the static bypass transfer switch is in the bypass mode. Device provides manual selection among the three conditions described below without interrupting supply to the load during switching:
   1. Full Isolation: Load is supplied, bypassing the UPS. Normal UPS ac input circuit, static bypass transfer switch, and UPS load terminals are completely disconnected from external circuits.
   2. Maintenance Bypass: Load is supplied, bypassing the UPS. UPS ac supply terminals are energized to permit operational checking, but system load terminals are isolated from the load.
   3. Normal: Normal UPS ac supply terminals are energized and the load is supplied through the static bypass transfer switch and the UPS rectifier-charger and inverter, or the battery and the inverter.
D. Environmental Conditions: The UPS shall be capable of operating continuously in the following environmental conditions without mechanical or electrical damage or degradation of operating capability, except battery performance:
   1. Ambient Temperature for Electronic Components: 32 to 104 deg F (0 to 40 deg C).
   2. Ambient Temperature for Battery: 41 to 95 deg F (5 to 35 deg C).
   3. Relative Humidity: Zero to 95 percent, noncondensing.
   4. Altitude: Sea level to 4000 feet.

2.2 PERFORMANCE REQUIREMENTS

A. Seismic Performance: UPS shall withstand the effects of earthquake motions determined according to ASCE/SEI 7.
   1. The term "withstand" means "the unit will remain in place without separation of any parts from the device when subjected to the seismic forces specified and the unit will be fully operational after the seismic event."

B. UL Compliance: Listed and labeled by an NRTL to comply with UL 1778.

C. NFPA Compliance: UPS components shall be listed and labeled by an NRTL as suitable for installation in computer rooms according to NFPA 75.

D. The UPS shall perform as specified in this article while supplying rated full-load current, composed of any combination of linear and nonlinear load, up to 100 percent nonlinear load with a maximum load crest factor of 3.0, under the following conditions or combinations of the following conditions:
   1. Inverter is switched to battery source.
   2. Steady-state ac input voltage deviates up to plus or minus 10 percent from nominal voltage.
   3. Steady-state input frequency deviates up to plus or minus 5 percent from nominal frequency.
   4. THD of input voltage is 15 percent or more with a minimum crest factor of 3.0, and the largest single harmonic component is a minimum of 5 percent of the fundamental value.
   5. Load is 50 percent unbalanced continuously.

E. Minimum Duration of Supply: If battery is sole energy source supplying rated full-load UPS current at 80 percent power factor, duration of supply is 15 minutes.

F. Input Voltage Tolerance: System steady-state and transient output performance remains within specified tolerances when steady-state ac input voltage varies plus 10 percent and minus 15 percent from nominal voltage.

G. Overall UPS Efficiency: Equal to or greater than 95 percent at 100 percent load, 95percent at 75 percent load, and 94 percent at 25 percent load.

H. Maximum Energizing Inrush Current: Six times the full-load current.

I. AC Output-Voltage Regulation for Loads 100 Percent Unbalanced: Maximum of plus or minus 2 percent over the full range of battery voltage.

J. AC Output-Voltage Regulation for Loads 100 Percent Balanced: Maximum of plus or minus 1 percent over the full range of battery voltage.

K. Output Frequency: 60 Hz, plus or minus 0.1 percent over the full range of input voltage, load, and battery voltage.

L. Limitation of harmonic distortion of input current to the UPS shall be as follows:
   1. Description: Rectifier-charger circuits shall limit THD to 5 percent, maximum, at rated full-load UPS current, for power sources with X/R ratio between 2 and 30. Provide tuned harmonic filter if required to meet harmonic distortion limit.

M. Maximum Harmonic Content of Output-Voltage Waveform: 5 percent rms total and 3 percent rms for any single harmonic, for rated full load with THD up to 50 percent, with a load crest factor of 3.0.

N. Minimum Overload Capacity of UPS at Rated Voltage: 125 percent of rated full load for 10 minutes, 200 percent for 60 seconds in normal operation, and 150 percent for 30 seconds in battery operating mode.

O. Maximum Output-Voltage Transient Excursions from Rated Value: For the following instantaneous load changes, stated as percentages of rated full UPS load, voltage shall remain within stated percentages of rated value and recover to, and remain within, plus or minus 2 percent of that value within 50 ms:
   1. 50 Percent: Plus or minus 3 percent.
   2. 100 Percent: Plus or minus 5 percent.
   3. Loss of AC Input Power: Plus or minus 1 percent.
   4. Restoration of AC Input Power: Plus or minus 1 percent.

P. Input Power Factor: A minimum of 0.90 lagging when supply voltage and current are at nominal rated values and the UPS is supplying rated full-load current without additional filters.

Q. Output Power Factor Rating: Loads with power factor of 0.9 leading to 0.8 lagging shall not require derating of the UPS. For loads with power factors outside this range, derate the UPS output as follows:
   1. Derate the UPS a maximum of 5 percent for 0.7 PF lagging.
   2. Derate the UPS a maximum of 10 percent for 0.6 PF lagging.
   3. Derate the UPS a maximum of 15 percent for 0.5 PF lagging.
   4. Derate the UPS a maximum of 20 percent for a range of 0.4 to 0.1 PF lagging.

R. EMI Emissions: Comply with FCC rules and regulations and with 47 CFR 15 for Class A equipment.

2.3 UPS SYSTEMS

A. Description: Self-contained, battery backup device and accessories that provides three-phase electrical power in the event of failure or sag in the normal power system.
B. Electronic Equipment: Solid-state devices using hermetically sealed, semiconductor elements. Devices include rectifier-charger, inverter, static bypass transfer switch, and system controls.
C. Enclosures: Comply with NEMA 250, Type 1, unless otherwise indicated.
D. Configuration: Multicabinet modular style units.
E. Control Assemblies: Mount on modular plug-ins, readily accessible for maintenance.
F. Electrical Components, Devices, and Accessories: Listed and labeled as defined in NFPA 70, by a qualified testing agency, and marked for intended location and application.
G. Seismic-Restraint Design: UPS assemblies, subassemblies, and components (and fastenings and supports, mounting, and anchorage devices for them) shall be designed and fabricated to withstand static and seismic forces.
H. Output Circuit Neutral Bus, Conductor, and Terminal Ampacity: Rated phase current times a multiple of 1.73, minimum.

2.4 SURGE SUPPRESSION

A. Protect internal UPS components from surges that enter at each ac power input connection including main disconnect switch, static bypass transfer switch, and maintenance bypass/isolation switch. Protect rectifier-charger, inverter, controls, and output components.
   1. Use factory-installed surge suppressors tested according to IEEE C62.41.1 and IEEE C62.41.2, Category B.
   2. Additional Surge Protection: Protect internal UPS components from low-frequency, high-energy voltage surges described in IEEE C62.41.1 and IEEE C62.41.2. Design the circuits connecting with external power sources and select circuit elements, conductors, conventional surge suppressors, and rectifier components and controls so input assemblies will have adequate mechanical strength and thermal and current-carrying capacity to withstand stresses imposed by 400-Hz, 180 percent voltage surges described in IEEE C62.41.1 and IEEE C62.41.2.

2.5 RECTIFIER-CHARGER

A. Description: Voltage source converter, 12]-pulse IGBT rectifier.
B. Capacity: Adequate to supply the inverter during rated full output load conditions and simultaneously recharge the battery from fully discharged condition to 95 percent of full charge within 10 times the rated discharge time for duration of supply under battery power at full load.
C. Output Ripple: Limited by output filtration to less than 0.5 percent of rated current, peak to peak.
D. Control Circuits: Immune to frequency variations within rated frequency ranges of normal and emergency power sources.
   1. Response Time: Field adjustable for maximum compatibility with local generator-set power source.
E. Battery Float-Charging Conditions: Comply with battery manufacturer's written instructions for battery terminal voltage and charging current required for maximum battery life. The battery charger shall be matched to the battery type supplied.
F. NiCd Battery Charger: Sense full charge by measuring the rate of temperature increase. Battery charging shall be terminated when the rate of temperature rise reaches 1.8 deg F (1 deg C) per minute. If the battery reaches 140 deg F (60 deg C) prior to reaching this rate of temperature rise, charging shall terminate. Chargers that determine full charge by voltage measurement to sense a 10-mV drop per cell when reaching full charge are also acceptable.

2.6 INVERTER

A. Description: Pulse-width modulated, carrier stored trench IGBT with sinusoidal output. Include a bypass phase synchronization window adjustment to optimize compatibility with local engine-generator-set power source.

2.7 CONTROLS AND INDICATIONS

A. Description: Group displays, indications, and basic system controls on a common control panel on front of UPS enclosure.

B. Minimum displays, indicating devices, and controls include those in lists below. Provide sensors, transducers, terminals, relays, and wiring required to support listed items. Alarms include audible signals and visual displays.

C. Indications: Plain-language messages on a digital LCD.

1. Quantitative indications shall include the following:
   - a. Input voltage, each phase, line to line.
   - b. Input current, each phase, line to line.
   - c. Bypass input voltage, each phase, line to line.
   - d. Bypass input frequency.
   - e. System output voltage, each phase, line to line.
   - f. System output current, each phase.
   - g. System output frequency.
   - h. DC bus voltage.
   - i. Battery current and direction (charge/discharge).
   - j. Elapsed time discharging battery.
2. Basic status condition indications shall include the following:
   - a. Normal operation.
   - b. Load-on bypass.
   - c. Load-on battery.
   - d. Inverter off.
   - e. Alarm condition.
3. Alarm indications shall include the following:
   - a. Bypass ac input overvoltage or undervoltage.
   - b. Bypass ac input overfrequency or underfrequency.
   - c. Bypass ac input and inverter out of synchronization.
   - d. Bypass ac input wrong-phase rotation.
   - e. Bypass ac input single-phase condition.
   - f. Bypass ac input filter fuse blown.
   - g. Internal frequency standard in use.
   - h. Battery system alarm.
   - i. Control power failure.
   - j. Fan failure.
   - k. UPS overload.
   - l. Battery-charging control faulty.
   - m. Input overvoltage or undervoltage.
   - n. Input transformer overtemperature.
   - o. Input circuit breaker tripped.
   - p. Input wrong-phase rotation.
   - q. Input single-phase condition.
   - r. Approaching end of battery operation.
   - s. Battery undervoltage shutdown.
   - t. Maximum battery voltage.
   - u. Inverter fuse blown.
   - v. Inverter transformer overtemperature.
   - w. Inverter overtemperature.
   - x. Static bypass transfer switch overtemperature.
   - y. Inverter power supply fault.
   - z. Inverter transistors out of saturation.
   - aa. Identification of faulty inverter section/leg.

bb. Inverter output overvoltage or undervoltage.
cc. UPS overload shutdown.
dd. Inverter current sensor fault.
ee. Inverter output contactor open.
ff. Inverter current limit.

4. Controls shall include the following:
   a. Inverter on-off.
   b. UPS start.
   c. Battery test.
   d. Alarm silence/reset.
   e. Output-voltage adjustment.

D. Dry-form "C" contacts shall be available for remote indication of the following conditions:
   1. UPS on battery.
   2. UPS on-line.
   3. UPS load-on bypass.
   4. UPS in alarm condition.
   5. UPS off (maintenance bypass closed).

E. Emergency Power off Switch: Capable of local operation and operation by means of activation by external dry contacts.

2.8 STATIC BYPASS TRANSFER SWITCH

A. Description: Solid-state switching device providing uninterrupted transfer with a contactor or electrically operated circuit breaker to automatically provide electrical isolation for the switch.

B. Switch Rating: Continuous duty at the rated full-load UPS current, minimum.

C. Input SPD: 160 kA.

2.9 BATTERY

A. Description: Valve-regulated, recombinant, lead-calcium units, factory assembled in an isolated compartment of UPS cabinet, complete with battery disconnect switch.
   1. Arrange for drawout removal of battery assembly from cabinet for testing and inspecting.

B. Description: Valve-regulated, heavy-duty, industrial, recombinant, pocket plate design, NiCd units in polypropylene containers, complete with battery disconnect switch and intercell connectors.
   1. Factory assembled in an isolated compartment of UPS cabinet.
   2. Arrange for drawout removal of battery assembly from cabinet for testing and inspecting.

C. Seismic-Restraint Design: Battery racks, cabinets, assemblies, subassemblies, and components (and fastenings and supports, mounting, and anchorage devices for them) shall be designed and fabricated to withstand static and seismic forces.

2.10 BASIC BATTERY MONITORING

A. Description: Continuous, real-time capture of battery performance data.

B. Battery Ground-Fault Detector: Initiates alarm when resistance to ground of positive or negative bus of battery is less than 5000 ohms.

C. Battery compartment high-temperature detector initiates an alarm when smoke or a temperature greater than 167 deg F (75 deg C) occurs within the compartment.

D. Battery compartment smoke/high-temperature detector initiates an alarm when smoke or a temperature greater than 167 deg F (75 deg C) occurs within the compartment.

E. Annunciation of Alarms: At UPS control panel and remotely.

2.11 BATTERY-CYCLE WARRANTY MONITORING

A. Description: Electronic device, acceptable to battery manufacturer as a basis for warranty action, for monitoring of charge-discharge cycle history of batteries covered by cycle-life warranties.

B. Performance: Automatically measure and record each discharge event, classify it according to duration category and total discharges according to warranty criteria, and display remaining warranted battery life on front panel display.

C. Additional monitoring functions and features shall include the following:

1. Measuring and Recording: Total voltage at battery terminal. Initiate an alarm for excursions outside the proper float-voltage level.
2. Monitoring: Ambient temperature at battery; initiate an alarm if temperature deviates from normally acceptable range.
3. Keypad on Device Front Panel: Provide access to monitored data using front panel display.
4. Alarm Contacts: Arrange to initiate remote alarm for battery discharge events, abnormal temperature and abnormal battery voltage or temperature.
5. Memory: Store recorded data in nonvolatile electronic memory.
6. Ethernet Port: Permits downloading of data to a PC.

2.12 SOURCE QUALITY CONTROL

A. Factory test complete UPS system before shipment. Include the following:

1. Test and demonstration of all functions, controls, indicators, sensors, and protective devices.
2. Full-load test.
3. Transient-load response test.
4. Overload test.
5. Power failure test.

B. Report test results. Include the following data:

1. Description of input source and output loads used. Describe actions required to simulate source load variation and various operating conditions and malfunctions.
2. List of indications, parameter values, and system responses considered satisfactory for each test action. Include tabulation of actual observations during test.
3. List of instruments and equipment used in factory tests.

PART 3 EXECUTION

3.1 INSTALLATION

A. Examine areas and conditions, with Installer present, for compliance with requirements for conditions affecting performance of the UPS.

B. Comply with NECA 1.

C. Wiring Method: Conceal conductors and cables in accessible ceilings, walls, and floors where possible.

D. Wiring within Enclosures: Bundle, lace, and train conductors to terminal points with no excess and without exceeding manufacturer's limitations on bending radii. Install lacing bars and distribution spools.

E. Equipment Mounting: Install UPS on concrete base. Comply with requirements for concrete base specified in Section 033000 "Cast-in-Place Concrete."

1. Install dowel rods to connect concrete base to concrete floor. Unless otherwise indicated, install dowel rods on 18-inch (450-mm) centers around the full perimeter of concrete base 6 inches from the outer edge of the base.
2. For supported equipment, install epoxy-coated anchor bolts that extend through concrete base and anchor into structural concrete floor.
3. Place and secure anchorage devices. Use setting drawings, templates, diagrams, instructions, and directions furnished with items to be embedded.
4. Install anchor bolts to elevations required for proper attachment to supported equipment.

F. Maintain minimum clearances and workspace at equipment according to manufacturer's written instructions and NFPA 70.

G. Connections: Interconnect system components. Make connections to supply and load circuits according to manufacturer's wiring diagrams unless otherwise indicated. Apply oxide inhibitor on battery terminals.

H. Identify system components, wiring, cabling, and terminals. Comply with requirements for identification specified in Section 260553 "Identification for Electrical Systems."

1. Identify each battery cell individually.

3.2 GROUNDING

A. Separately Derived Systems: If part of a listed power supply for a data-processing room, comply with manufacturer's written instructions that include grounding requirements in excess of NFPA 70 requirements for connecting to grounding electrodes and for bonding to metallic piping near isolation transformer. Comply with requirements in Section 260526 "Grounding and Bonding for Electrical Systems."

3.3 BATTERY EQUALIZATION

A. Equalize charging of battery cells according to manufacturer's written instructions. Record individual-cell voltages.

3.4 FIELD QUALITY CONTROL

A. Testing Agency: Owner will engage a qualified testing agency to perform tests and inspections.
B. Testing Agency: Engage a qualified testing agency to perform tests and inspections.
C. Perform tests and inspections with the assistance of a factory-authorized service representative.
D. Tests and Inspections:
1. Inspect interiors of enclosures, including the following:
a. Inspect anchorage, alignment, grounding, and required clearances.
b. Component type and labeling verification.
c. Ratings of installed components.
2. Test electrical and mechanical interlock systems for correct operation and sequencing.
3. Inspect bolted electrical connections for high resistance using one or more of the following methods:
a. Use of low-resistance ohmmeter according to Section 7.22.2.2 of NETA ATS.
b. Verify tightness of accessible bolted electrical connections by calibrated torque-wrench method according to manufacturer's published data or Table 100.12 of NETA ATS.
c. Perform thermographic survey according to Section 9 of NETA ATS.
4. Test static transfer from inverter to bypass and back. Use normal load, if possible.
5. Test dc undervoltage trip level on inverter input breaker. Set according to manufacturer's published data.
6. Verify synchronizing indicators for static switch and bypass switches.
7. Test insulated-case and molded-case breakers.
a. Perform insulation-resistance tests for one minute on each pole, phase-to-phase and phase-to-ground with the circuit breaker closed, and across each open pole. Apply voltage according to manufacturer's published data. In the absence of manufacturer's published data, use Table 100.1 of NETA ATS.
b. Perform insulation-resistance tests on all control wiring for ground. Applied potential shall be 500-V dc for 300-V rated cable and 1000-V dc for 600-V rated cable. Test duration shall be one minute. For units with solid-state components, follow manufacturer's recommendation.
c. Use primary current injection to determine long time and short time, ground fault, and instantaneous pickup, Use secondary current injection to test trip functions.
d. Perform minimum pickup voltage tests on shunt trip and close coils according to manufacturer's published data.
e. Verify operation of charging mechanism.
f. Verify correct operation of auxiliary features such as trip and pickup indicators, zone interlocking, electrical close and trip operation, trip-free, antipump function, and trip unit battery condition. Reset all trip logs and indicators.
8. Test automatic transfer switches.
a. Perform resistance measurements through bolted connections with a low-resistance ohmmeter, if applicable, according to Section 7.22.3.1 of NETA ATS.
b. Perform insulation-resistance tests on all control wiring for ground. Applied potential shall be 500-V dc for 300-V rated cable and 1000-V dc for 600-V rated cable. Test duration shall be

one minute. For units with solid-state components or for control devices that cannot tolerate the applied voltage, follow manufacturer's recommendation.

c. Perform a contact/pole-resistance test.

d. Verify settings and operation of control devices.

e. Calibrate and set all relays and timers according to Section 7.9 of NETA ATS.

f. Verify phase rotation, phasing, and synchronized operation as required by the application.

g. Perform automatic transfer tests.

1) Simulate loss of normal power.
2) Return to normal power.
3) Simulate loss of emergency power.
4) Simulate all forms of single-phase conditions.

h. Verify correct operation and timing of the following functions:

1) Normal source voltage-sensing and frequency-sensing relays.
2) Time delay on transfer.
3) Alternative source voltage-sensing and frequency-sensing relays.
4) Automatic transfer operation.
5) Interlocks and limit switch function.
6) Time delay and retransfer on normal power restoration.

9. Test direct current system's batteries.

a. Verify adequacy of battery support racks, mounting, anchorage, alignment, grounding, and clearances.

b. Inspect spill containment installation. Measure charger float and equalizing voltage levels. Adjust to battery manufacturer's recommended settings.

c. Verify all charger functions and alarms.

d. Measure each cell voltage and total battery voltage with charger energized and in float mode of operation.

e. Perform a load test according to manufacturer's published data or IEEE 450.

f. Measure charger float and equalizing voltage levels. Adjust to battery manufacturer's recommended settings.

g. Test values.

1) Compare bolted connection resistance values to values of similar connections. Investigate values that deviate from those of similar bolted connections by more than 50 percent of the lowest value.
2) Charger float and equalize voltage levels shall be according to battery manufacturer's published data.
3) The results of charger functions and alarms shall be according to manufacturer's published data.
4) Cell voltages shall be within 0.05 V of each other or according to manufacturer's published data.
5) Compare bolted connection resistance values to values of similar connections. Investigate values that deviate from those of similar bolted connections by more than 50 percent of the lowest value.
6) Cell internal ohmic values (resistance, impedance, or conductance) shall not vary by more than 25 percent between identical cells that are in a fully charged state.
7) Results of load tests shall be according to manufacturer's published data or IEEE 450.

10. Test communication of status and alarms to remote monitoring equipment.

11. Load the system using a variable-load bank to simulate kilovolt amperes, kilowatts, and power factor of loads for unit's rating. Use instruments calibrated within the previous six months according to NIST standards.

a. Simulate malfunctions to verify protective device operation.

b. Test duration of supply on emergency, low-battery voltage shutdown, and transfers and restoration due to normal source failure.

c. Test harmonic content of input and output current at 25, 50, and 100 percent of rated loads.

d. Test output voltage under specified transient-load conditions.

e. Test efficiency at 50, 75, and 100 percent of rated loads.

f. Test remote status and alarm panel functions.

g. Test battery-monitoring system functions.

E. Seismic-restraint tests and inspections shall include the following:

1. Inspect type, size, quantity, arrangement, and proper installation of mounting or anchorage devices.
2. Test mounting and anchorage devices according to requirements in Section 260548.16 "Seismic Controls for Electrical Systems."

F. The UPS system will be considered defective if it does not pass tests and inspections.

G. Record of Tests and Inspections: Maintain and submit documentation of tests and inspections, including references to manufacturers' written instructions and other test and inspection criteria. Include results of tests, inspections, and retests.

H. Prepare test and inspection reports.

3.5 DEMONSTRATION

A. Engage a factory-authorized service representative to train Owner's maintenance personnel to adjust, operate, and maintain the UPS.

END OF SECTION

SECTION 264113 - LIGHTNING PROTECTION FOR STRUCTURES

PART 1 GENERAL

1.1 SUMMARY

A. Section Includes: Lightning protection system for the following:
   1. Ordinary structures and mechanical equipment.

1.2 ACTION SUBMITTALS

A. Product Data: For each product.
B. Shop Drawings:
   1. Include layouts of the lightning protection system, with details of the components to be used in the installation.
   2. Include raceway locations needed for the installation of conductors.
   3. Details of air terminals, ground rods, ground rings, conductor supports, splices, and terminations, including concealment requirements.
   4. Calculations required by NFPA 780 for bonding of metal bodies.

1.3 INFORMATIONAL SUBMITTALS

A. Coordination Drawings: Lightning protection system Shop Drawings, drawn to scale, coordinated with each other, using input from installers of the items involved:
B. Qualification Data: For Installer.
C. Product certificates.
D. Field quality-control reports.

1.4 CLOSEOUT SUBMITTALS

A. Maintenance data.
B. Completion Certificate:
   1. UL Master Label Certificate.

1.5 QUALITY ASSURANCE

A. Installer Qualifications: UL-listed installer, category OWAY.

PART 2 PRODUCTS

2.1 PERFORMANCE REQUIREMENTS

A. NFPA Lightning Protection Standard: Comply with NFPA 780 requirements for Class I buildings.
B. UL Lightning Protection Standard: Comply with UL 96A requirements for Class I buildings.
C. Lightning Protection Components, Devices, and Accessories: Listed and labeled by a qualified testing agency as complying with UL 96, and marked for intended location and application.

2.2 MATERIALS

A. Air Terminals:
   1. Copper or Aluminum unless otherwise indicated.
   2. 1/2-inch (12.7-mm) long.
   3. Rounded tip.
   4. Integral base support.
B. Class I Main Conductors:

1. Stranded Copper: 57,400 circular mils in diameter.
2. Aluminum: 98,600 circular mils in diameter.

C. Secondary Conductors:
1. Stranded Copper: 26,240 circular mils in diameter.
2. Aluminum: 41,400 circular mils in diameter.

D. Ground Loop Conductor: Stranded copper.

E. Ground Rods:
1. Material: Copper-clad steel.
2. Diameter: 3/4 inch.
3. Rods shall be not less than 120 inches long.

PART 3 EXECUTION

3.1 INSTALLATION

A. Install lightning protection components and systems according to NFPA 780.

B. Install conductors with direct paths from air terminals to ground connections. Avoid bends less than 90 degrees and 8 inches in radius and narrow loops.

C. Conceal conductors within normal view from exterior locations at grade within 200 feet of building. Comply with requirements for concealed systems in NFPA 780.

D. Ground Ring Electrode: The conductor shall be not less than the main-size lightning conductor.

3.2 CONNECTIONS

A. Aboveground concealed connections, and connections in earth or concrete, shall be done by exothermic welds or by high-compression fittings listed for the purpose.

B. Aboveground exposed connections shall be done using the following types of connectors, listed and labeled for the purpose: exothermic weld.

C. Bonding Straps and Jumpers: Install in locations accessible for inspection and maintenance, except where routed through short lengths of conduit.
1. Bonding to Structure: Bond straps directly to basic structure, taking care not to penetrate any adjacent parts.
2. Bonding to Equipment Mounted on Vibration Isolation Hangers and Supports: Install bonding so vibration is not transmitted to rigidly mounted equipment.

3.3 FIELD QUALITY CONTROL

A. Special Inspections: Engage a qualified special inspector to perform the following special inspections:
1. Perform inspections as required to obtain a UL Master Label for system.

B. Prepare test and inspection reports and certificates.

END OF SECTION

SECTION 264313 - SURGE PROTECTIVE DEVICES FOR LOW-VOLTAGE ELECTRICAL POWER CIRCUITS

PART 1 GENERAL

1.1 SUMMARY

A. Section Includes:
   1. Type 1 surge protective devices (SPDs).
   2. Type 2 surge protective devices (SPDs).
   3. Enclosures.

B. Related Requirements:
   1. Section 260010 "Supplemental Requirements for Electrical" for additional abbreviations, definitions, submittals, qualifications, testing agencies, and other Project requirements applicable to Work specified in this Section.
   2. Section 260011 "Facility Performance Requirements for Electrical" for seismic-load, wind-load, acoustical, and other field conditions applicable to Work specified in this Section.
   3. Section 262413 "Switchboards" for integral SPDs installed by switchboard manufacturer.
   4. Section 262416 "Panelboards" for integral SPDs installed by panelboard manufacturer.
   5. Section 262726 "Wiring Devices" for integral SPDs installed by receptacle manufacturer.

1.2 DEFINITIONS

A. In: Nominal discharge current.

B. Voltage Protection Rating (VPR): A rating selected from UL 1449 list of preferred values assigned to each mode of protection.

1.3 ACTION SUBMITTALS

A. Product Data:
   1. For each type of product.
      a. Include electrical characteristics, specialties, and accessories for SPDs.
      b. Certification of compliance with UL 1449 by qualified electrical testing laboratory recognized by authorities having jurisdiction including the following information:
         1) Tested values for VPRs.
         2) In ratings.
         3) MCOV, type designations.
         4) OCPD requirements.
         5) Manufacturer's model number.
         6) System voltage.
         7) Modes of protection.

B. Field quality-control reports.

1.4 INFORMATIONAL SUBMITTALS

A. Sample warranty.

1.5 WARRANTY

A. Special Manufacturer Extended Warranty: Manufacturer warrants that SPDs perform in accordance with specified requirements and agrees to provide repair or replacement of SPDs that fail to perform as specified within extended warranty period.
   1. Initial Extended Warranty Period: Five year(s) from date of Substantial Completion, for labor, materials, and equipment.
   2. Follow-On Extended Warranty Period: 10 year(s) from date of Substantial Completion, for materials only, f.o.b. the nearest shipping point to Project site.

PART 2 PRODUCTS

2.1 TYPE 1 SURGE PROTECTIVE DEVICES (SPDS)

A. Source Limitations: Obtain devices from single source from single manufacturer.
B. General Characteristics:
1. Reference Standards: UL 1449, Type 1.
2. MCOV: Not less than 125 percent of nominal system voltage for 208Y/120 V and 120/240 V power systems, and not less than 115 percent of nominal system voltage for 480Y/277 V power systems.
3. Peak Surge Current Rating: Minimum single-pulse surge current withstand rating per phase must not be less than 240 kA. Peak surge current rating must be arithmetic sum of the ratings of individual MOVs in a given mode.
4. Protection modes and UL 1449 VPR for grounded wye circuits with 208Y/120 V, three-phase, four-wire circuits must not exceed the following:
a. Line to Neutral: 1200 V for 480Y/277 V and 700 V for 208Y/120 V.
b. Line to Line: 2000 V for 480Y/277 V and 1200 V for 208Y/120 V.
5. Protection modes and UL 1449 VPR for 240/120 V, single-phase, three-wire circuits must not exceed the following:
a. Line to Neutral: 700 V.
b. Line to Line: 1200 V.
6. SCCR: Not less than 200 kA.
7. In Rating: 20 kA.
C. Options:
1. Include integral disconnect switch.
2. Include internal thermal protection that disconnects the SPD before damaging internal suppressor components.
3. Include indicator light display for protection status.
4. Include audible alarm.
5. Include surge counter.

2.2 TYPE 2 SURGE PROTECTIVE DEVICES (SPDS)

A. Source Limitations: Obtain devices from single source from single manufacturer.
B. General Characteristics:
1. Reference Standards: UL 1449, Type 2; UL 1283.
2. MCOV: Not less than 125 percent of nominal system voltage for 208Y/120 V and 120/240 V power systems, and not less than 115 percent of nominal system voltage for 480Y/277 V power systems.
3. Peak Surge Current Rating: Minimum single-pulse surge current withstand rating per phase must not be less than 100 kA. Peak surge current rating must be arithmetic sum of the ratings of individual MOVs in a given mode.
4. Protection modes and UL 1449 VPR for grounded wye circuits three-phase, four-wire circuits must not exceed the following:
a. Line to Neutral: 1200 V for 480Y/277 V and 700 V for 208Y/120 V.
b. Line to Ground: 1200 V for 480Y/277 V and 700 V for 208Y/120 V.
c. Neutral to Ground: 1200 V for 480Y/277 V and 700 V for 208Y/120 V.
d. Line to Line: 2000 V for 480Y/277 V and 1200 V for 208Y/120 V.
5. Protection modes and UL 1449 VPR for 240/120 V, single-phase, three-wire circuits must not exceed the following:
a. Line to Neutral: 700 V.
b. Line to Ground: 700 V.
c. Neutral to Ground: 700 V.
d. Line to Line: 1200 V.
6. SCCR: Equal or exceed 100 kA.
7. In Rating: 10 kA.

C. Options:
   1. Include LED indicator lights for power and protection status.
   2. Include internal thermal protection that disconnects the SPD before damaging internal suppressor components.
   3. Include surge counter.

2.3 ENCLOSURES

A. Indoor Enclosures: Type 1.
B. Outdoor Enclosures: Type 3R.

PART 3 EXECUTION

3.1 INSTALLATION

A. Provide OCPD and disconnect for installation of SPD in accordance with UL 1449 and manufacturer's instructions.

3.2 FIELD QUALITY CONTROL

A. Field tests and inspections must be witnessed by authorities having jurisdiction.
B. Tests and Inspections:
   1. Compare equipment nameplate data for compliance with Drawings and the Specifications.
   2. Inspect anchorage, alignment, grounding, and clearances.
   3. Verify that electrical wiring installation complies with manufacturer's installation requirements.
C. Nonconforming Work:
   1. SPDs that do not pass tests and inspections will be considered defective.
   2. Remove and replace defective units and retest.
D. Prepare test and inspection reports.
E. Manufacturer Services:
   1. Engage factory-authorized service representative to support field tests and inspections.

3.3 STARTUP SERVICE

A. Complete startup checks in accordance with manufacturer's instructions.
B. Do not perform insulation-resistance tests of the distribution wiring equipment with SPDs installed. Disconnect SPDs before conducting insulation-resistance tests; reconnect them immediately after the testing is over.
C. Energize SPDs after power system has been energized, stabilized, and tested.

END OF SECTION

SECTION 265119 - LED INTERIOR LIGHTING

PART 1 GENERAL

1.1 SUMMARY

A. Section includes the following types of LED luminaires:
   1. Downlight.
   2. Highbay
   3. Recessed Troffer
   4. Linear industrial.
   5. Strip light.
   6. Surface mount, linear.
   7. Suspended, linear.

1.2 ACTION SUBMITTALS

A. Product Data: For each type of product.
   1. Manufacturers' Certified Data: Photometric data certified by manufacturer's laboratory with a current accreditation under the National Voluntary Laboratory Accreditation Program for Energy Efficient Lighting Products.
   2. Testing Agency Certified Data: For indicated luminaires, photometric data certified by a qualified independent testing agency. Photometric data for remaining luminaires shall be certified by manufacturer.
B. Shop Drawings: For nonstandard or custom luminaires.
   1. Include plans, elevations, sections, and mounting and attachment details.
   2. Include details of luminaire assemblies. Indicate dimensions, weights, loads, required clearances, method of field assembly, components, and location and size of each field connection.
   3. Include diagrams for power, signal, and control wiring.
C. Samples: For each luminaire and for each color and texture with standard factory-applied finish.

1.3 INFORMATIONAL SUBMITTALS

A. Coordination Drawings: Reflected ceiling plan(s) and other details, drawn to scale and coordinated with each other, using input from installers of the items involved.
B. Seismic Qualification Data: For luminaires, accessories, and components, from manufacturer.
C. Product Certificates: For each type of luminaire.
D. Product test reports.
E. Sample warranty.

1.4 CLOSEOUT SUBMITTALS

A. Operation and maintenance data.

1.5 QUALITY ASSURANCE

A. Luminaire Photometric Data Testing Laboratory Qualifications: Luminaire manufacturer's laboratory that is accredited under the NVLAP for Energy Efficient Lighting Products.
B. Luminaire Photometric Data Testing Laboratory Qualifications: Provided by an independent agency, with the experience and capability to conduct the testing indicated, that is an NRTL as defined by OSHA in 29 CFR 1910.7, accredited under the NVLAP for Energy Efficient Lighting Products, and complying with the applicable IES testing standards.
C. Provide luminaires from a single manufacturer for each luminaire type.
D. Each luminaire type shall be binned within a three-step MacAdam Ellipse to ensure color consistency among luminaires.

1.6 WARRANTY

A. Warranty: Manufacturer and Installer agree to repair or replace components of luminaires that fail in materials or workmanship within specified warranty period.
B. Warranty Period: Five year(s) from date of Substantial Completion.

PART 2 PRODUCTS

2.1 PERFORMANCE REQUIREMENTS

A. Seismic Performance: Luminaires shall withstand the effects of earthquake motions determined in accordance with ASCE/SEI 7.
    1. The term "withstand" means "the luminaire will remain in place without separation of any parts when subjected to the seismic forces specified and the luminaire will be fully operational during and after the seismic event."
B. Ambient Temperature: 41 to 104 deg F (5 to 40 deg C).
    1. Relative Humidity: Zero to 95 percent.
C. Altitude: Sea level to 1000 feet.

2.2 LUMINAIRE REQUIREMENTS

A. Electrical Components, Devices, and Accessories: Listed and labeled as defined in NFPA 70, by a qualified testing agency, and marked for intended location and application.
B. Factory-Applied Labels: Comply with UL 1598. Include recommended lamps. Locate labels where they will be readily visible to service personnel, but not seen from normal viewing angles when lamps are in place.
    1. Label shall include the following lamp characteristics:
        a. "USE ONLY" and include specific lamp type.
        b. Lamp diameter, shape, size, wattage, and coating.
        c. CCT and CRI.
C. Recessed luminaires shall comply with NEMA LE 4.
D. NRTL Compliance: Luminaires for hazardous locations shall be listed and labeled for indicated class and division of hazard by an NRTL.
E. FM Global Compliance: Luminaires for hazardous locations shall be listed and labeled for indicated class and division of hazard by FM Global.
F. California Title 24 compliant.

2.3 DOWNLIGHT.

A. Nominal Operating Voltage: 277 V ac.
B. Lamp:
    1. Minimum lumens as indicated on drawings.
    2. Minimum allowable efficacy of 80 lm/W.
    3. CRI of 80 minimum. CCT of 3500K.
    4. Rated lamp life of 50,000 hours to L70.
    5. Dimmable from 100 percent to zero percent of maximum light output.
    6. Internal driver.
    7. Lens Thickness: At least 0.125-inch (3.175-mm) minimum unless otherwise indicated.
C. Housings:
    1. Extruded-aluminum housing and heat sink.
    2. powder-coat finish.
    3. Universal mounting bracket.
    4. Integral junction box with conduit fittings.
D. Doors, Frames, and Other Internal Access: Smooth operating, free of light leakage under operating conditions, and designed to permit relamping without use of tools. Designed to prevent doors, frames,

lenses, diffusers, and other components from falling accidentally during relamping and when secured in operating position.

E. Diffusers and Globes:
   1. Fixed lens.
   2. Medium light distribution.
   3. Lens Thickness: At least 0.125-inch (3.175-mm) minimum unless otherwise indicated.

F. Standards:
   1. ENERGY STAR certified.
   2. RoHS compliant.
   3. UL Listing: Listed for damp location.
   4. Recessed luminaires shall comply with NEMA LE 4.

2.4 RECESSED TROFFER, STRIP LIGHT, SURFACE MOUNT, LINEAR, SUSPENDED, LINEAR.

A. Nominal Operating Voltage: 277 V ac.

B. Lamp:
   1. Minimum lumens as indicated on drawings.
   2. Minimum allowable efficacy of 85 lm/W.
   3. CRI of minimum 80. CCT of 3500K.
   4. Rated lamp life of 50,000 hours to L70.
   5. Dimmable from 100 percent to zero percent of maximum light output.
   6. Internal driver.

C. Housings:
   1. Extruded-aluminum housing and heat sink.
   2. powder-coat finish.
   3. With integral mounting provisions.

D. Doors, Frames, and Other Internal Access: Smooth operating, free of light leakage under operating conditions, and designed to permit relamping without use of tools. Components are designed to prevent doors, frames, lenses, diffusers, and other components from falling accidentally during relamping and when secured in operating position.

E. Standards:
   1. ENERGY STAR certified.
   2. RoHS compliant.
   3. UL Listing: Listed for damp location.
   4. NEMA LE 4.

2.5 MATERIALS

A. Metal Parts:
   1. Free of burrs and sharp corners and edges.
   2. Sheet metal components shall be steel unless otherwise indicated.
   3. Form and support to prevent warping and sagging.

B. Steel:
   1. ASTM A36/A36M for carbon structural steel.
   2. ASTM A568/A568M for sheet steel.

C. Stainless Steel:
   1. 1. Manufacturer's standard grade.
   2. 2. Manufacturer's standard type, ASTM A240/240M.

D. Galvanized Steel: ASTM A653/A653M.

E. Aluminum: ASTM B209.

2.6 METAL FINISHES

A. Variations in finishes are unacceptable in the same piece. Variations in finishes of adjoining components are acceptable if they are within the range of approved Samples and if they can be and are assembled or installed to minimize contrast.

2.7 LUMINAIRE SUPPORT

A. Comply with requirements in Section 260529 "Hangers and Supports for Electrical Systems" for channel and angle iron supports and nonmetallic channel and angle supports.
B. Single-Stem Hangers: 1/2-inch (13-mm) steel tubing with swivel ball fittings and ceiling canopy. Finish same as luminaire.
C. Wires: ASTM A641/A641M, Class 3, soft temper, zinc-coated steel, 12 gage 0.11 inch.
D. Rod Hangers: 3/16-inch (5-mm) minimum diameter, cadmium-plated, threaded steel rod.
E. Hook Hangers: Integrated assembly matched to luminaire, line voltage, and equipment with threaded attachment, cord, and locking-type plug.

PART 3 EXECUTION

3.1 INSTALLATION

A. Comply with NECA 1.
B. Install luminaires level, plumb, and square with ceilings and walls unless otherwise indicated.
C. Install lamps in each luminaire.
D. Supports:
   1. Sized and rated for luminaire weight.
   2. Able to maintain luminaire position after cleaning and relamping.
   3. Provide support for luminaire without causing deflection of ceiling or wall.
   4. Luminaire-mounting devices shall be capable of supporting a horizontal force of 100 percent of luminaire weight and a vertical force of 400 percent of luminaire weight.
E. Comply with requirements in Section 260519 "Low-Voltage Electrical Power Conductors and Cables" for wiring connections.

3.2 IDENTIFICATION

A. Identify system components, wiring, cabling, and terminals. Comply with requirements for identification specified in Section 260553 "Identification for Electrical Systems."

3.3 FIELD QUALITY CONTROL

A. Perform the following tests and inspections:
   1. Operational Test: After installing luminaires, switches, and accessories, and after electrical circuitry has been energized, test units to confirm proper operation.
   2. Test for Emergency Lighting: Interrupt power supply to demonstrate proper operation. Verify transfer from normal power to battery power and retransfer to normal.
B. Luminaire will be considered defective if it does not pass operation tests and inspections.
C. Prepare test and inspection reports.

3.4 STARTUP SERVICE

A. Comply with requirements for startup specified in Section 260943.16 "Addressable-Luminaire Lighting Controls."
B. Comply with requirements for startup specified in Section 260943.23 "Relay-Based Lighting Controls."

END OF SECTION

SECTION 265213 - EMERGENCY AND EXIT LIGHTING

PART 1 GENERAL

1.1 SUMMARY

A. Section Includes:
   1. Emergency lighting.
   2. Exit signs.
   3. Materials.
   4. Luminaire support components.
B. Related Requirements:
   1. Section 260010 "Supplemental Requirements for Electrical" for additional abbreviations, definitions, submittals, qualifications, testing agencies, and other Project requirements applicable to Work specified in this Section.
   2. Section 260011 "Facility Performance Requirements for Electrical" for seismic-load, wind-load, acoustical, and other field conditions applicable to Work specified in this Section.

1.2 ACTION SUBMITTALS

A. Product Data:
   1. For each type of emergency lighting unit, exit sign, and emergency lighting support.
      a. Include data on features, accessories, and finishes.
      b. Include physical description of unit and dimensions.
      c. Battery and charger for light units.
      d. Include life, output of luminaire (lumens, CCT, and CRI), and energy-efficiency data.
      e. Include photometric data and adjustment factors based on laboratory tests by, or under supervision of, qualified luminaire photometric testing laboratory, for each luminaire type.
B. Shop Drawings:
   1. For nonstandard or custom luminaires.
      a. Include plans, elevations, sections, and mounting and attachment details.
      b. Include details of equipment assemblies. Indicate dimensions, weights, loads, required clearances, method of field assembly, components, and location and size of each field connection.
      c. Include diagrams for power, signal, and control wiring.
C. Product Schedule:
   1. For emergency lighting units. Use same designations indicated on Drawings.
   2. For exit signs. Use same designations indicated on Drawings.

1.3 INFORMATIONAL SUBMITTALS

A. Product Certificates: For each type of luminaire.
B. Sample Warranty: For manufacturer's warranty.

1.4 WARRANTY

A. Special Installer Extended Warranty for Emergency and Exit Lighting: Installer warrants that fabricated and installed emergency luminaires and exit signs, including batteries, perform in accordance with specified requirements and agrees to repair or replace components and assemblies that fail to perform as specified within extended warranty period.
   1. Extended Warranty Period: Two year(s) from date of Substantial Completion; full coverage for labor, materials, and equipment.

PART 2 PRODUCTS

2.1 GENERAL REQUIREMENTS FOR EMERGENCY LIGHTING

A. Electrical Components, Devices, and Accessories: Listed and labeled in accordance with NFPA 70 and UL 924, by qualified electrical testing laboratory recognized by authorities having jurisdiction, and marked for intended location and application.
B. Comply with NFPA 101.
C. Comply with NEMA LE 4 for recessed luminaires.
D. Comply with UL 1598 for fluorescent luminaires.
E. Internal Type Emergency Power Unit: Self-contained, modular, battery-inverter unit, factory mounted within luminaire body.
    1. Emergency Connection: Operate one lamp(s) continuously at an output of 1100 lumens each upon loss of normal power. Connect unswitched circuit to battery-inverter unit and switched circuit to luminaire ballast.
    2. Operation: Relay automatically turns lamp on when power-supply circuit voltage drops to 80 percent of nominal voltage or below. Lamp automatically disconnects from battery when voltage approaches deep-discharge level. When normal voltage is restored, relay disconnects lamps from battery, and battery is automatically recharged and floated on charger.
    3. Test Push-Button and Indicator Light: Visible and accessible without opening luminaire or entering ceiling space.
        a. Push Button: Push-to-test type, in unit housing, simulates loss of normal power and demonstrates unit operability.
        b. Indicator Light: LED indicates normal power on. Normal glow indicates trickle charge; bright glow indicates charging at end of discharge cycle.
    4. Battery: Sealed, maintenance-free, nickel-cadmium type.
    5. Charger: Fully automatic, solid-state, constant-current type with sealed power transfer relay.
    6. Integral Self-Test: Factory-installed electronic device automatically initiates code-required test of unit emergency operation at required intervals. Test failure is annunciated by an integral audible alarm and a flashing red LED.
F. External Type Emergency Power Unit: Self-contained, modular, battery-inverter unit, suitable for powering one or more lamps, remote mounted from luminaire.
    1. Emergency Connection: Operate one LED lamp continuously. Connect unswitched circuit to battery-inverter unit and switched circuit to luminaire.
    2. Operation: Relay automatically turns lamp on when power-supply circuit voltage drops to 80 percent of nominal voltage or below. Lamp automatically disconnects from battery when voltage approaches deep-discharge level. When normal voltage is restored, relay disconnects lamps from battery, and battery is automatically recharged and floated on charger.
    3. Battery: Sealed, maintenance-free, nickel-cadmium type.
    4. Charger: Fully automatic, solid-state, constant-current type.
    5. Housing: Type 1 enclosure listed for installation inside, on top of, or remote from luminaire. Remote assembly must be located no less than half of distance recommended by emergency power unit manufacturer, whichever is less.
    6. Test Push Button: Push-to-test type, in unit housing, simulates loss of normal power and demonstrates unit operability.
    7. LED Indicator Light: Indicates normal power on. Normal glow indicates trickle charge; bright glow indicates charging at end of discharge cycle.
    8. Integral Self-Test: Factory-installed electronic device automatically initiates code-required test of unit emergency operation at required intervals. Test failure is annunciated by an integral audible alarm and a flashing red LED.

2.2 EMERGENCY LIGHTING

A. General Characteristics: Self-contained units.
B. Emergency Luminaire
    1. Options:
        a. Operating at nominal voltage as indicated on drawings.

b. External emergency power unit.
c. Rated for installation in damp locations, and for sealed and gasketed luminaires in wet locations.
d. UL 94 HB flame rating.

2.3 EXIT SIGNS

A. General Characteristics: Comply with UL 924; for sign colors, visibility, luminance, and lettering size, comply with authorities having jurisdiction.
B. Internally Lighted Sign:
1. Options:
a. Operating at nominal voltage as indicated on drawings
b. Lamps for AC Operation:
1) LEDs; 50,000 hours minimum rated lamp life.
c. Self-Powered Exit Signs (Battery Type): Internal emergency power unit.

2.4 LUMINAIRE SUPPORT COMPONENTS

A. Comply with requirements in Section 260529 "Hangers and Supports for Electrical Systems" for channel and angle iron supports and nonmetallic channel and angle supports.

PART 3 EXECUTION

3.1 INSTALLATION

A. Install luminaires level, plumb, and square with ceilings and walls unless otherwise indicated.
B. Supports:
1. Sized and rated for luminaire and emergency power unit weight.
2. Able to maintain luminaire position when testing emergency power unit.
3. Provide support for luminaire and emergency power unit without causing deflection of ceiling or wall.
4. Luminaire-mounting devices must be capable of supporting a horizontal force of 100 percent of luminaire and emergency power unit weight and vertical force of 400 percent of luminaire weight.
C. Wall-Mounted Luminaire Support:
1. Attached to structural members in walls.
2. Do not attach luminaires directly to gypsum board.
D. Suspended Luminaire Support:
1. Pendants and Rods: Where longer than 48 inch, brace to limit swinging.
2. Stem-Mounted, Single-Unit Luminaires: Suspend with twin-stem hangers. Support with approved outlet box and accessories that hold stem and provide damping of luminaire oscillations. Support outlet box vertically to building structure using approved devices.
3. Continuous Rows of Luminaires: Use tubing or stem for wiring at one point and wire support for suspension for each unit length of luminaire chassis, including one at each end.
4. Do not use ceiling grid as support for pendant luminaires. Connect support wires or rods to building structure.
E. Ceiling Grid Mounted Luminaires:
1. Secure to outlet box, if provided.
2. Secure emergency power unit using approved fasteners in a minimum of four locations, spaced near corners of emergency power unit.

3.2 IDENTIFICATION

A. Identify system components, wiring, cabling, and terminals. Comply with requirements for identification specified in Section 260553 "Identification for Electrical Systems."

3.3 FIELD QUALITY CONTROL

A. Field tests and inspections must be witnessed by authorities having jurisdiction.
B. Tests and Inspections:
   1. Test for Emergency Lighting: Interrupt power supply to demonstrate proper operation. Verify transfer from normal power to battery power and retransfer to normal.
C. Nonconforming Work:
   1. Luminaire will be considered defective if it does not pass operation tests and inspections.
   2. Remove and replace defective units and retest.
D. Prepare test and inspection reports.
E. Manufacturer Services:
   1. Engage factory-authorized service representative to support field tests and inspections.

3.4 ADJUSTING

A. Adjustments: Within 12 months of date of Substantial Completion, provide on-site visit to do the following:
   1. Inspect luminaires. Replace lamps, emergency power units , batteries, exit signs, and luminaires that are defective.
      a. Parts and supplies must be manufacturer's authorized replacement parts and supplies.
   2. Conduct short-duration tests on all emergency lighting.

3.5 PROTECTION

A. Remove and replace luminaires and exit signs that are damaged or caused to be unfit for use by construction activities.

END OF SECTION

SECTION 265619 - LED EXTERIOR LIGHTING

PART 1 GENERAL

1.1 SUMMARY

A. Section Includes:
   1. Exterior solid-state luminaires that are designed for and exclusively use LED lamp technology.
   2. Luminaire supports.
   3. Luminaire-mounted photoelectric relays.
B. Related Requirements:
   1. Section 260923 "Lighting Control Devices" for automatic control of lighting, including time switches, photoelectric relays, occupancy sensors, and multipole lighting relays and contactors.
   2. Section 260926 "Lighting Control Panelboards" for panelboard-based lighting control.
   3. Section 260943.16 "Addressable-Luminaire Lighting Controls" and Section 260943.23 "Relay-Based Lighting Controls" for manual or programmable control systems with low-voltage control wiring or data communication circuits.
   4. Section 265613 "Lighting Poles and Standards" for poles and standards used to support exterior lighting equipment.

1.2 DEFINITIONS

A. CCT: Correlated color temperature.
B. CRI: Color rendering index.
C. Fixture: See "Luminaire."
D. IP: International Protection or Ingress Protection Rating.
E. Lumen: Measured output of lamp and luminaire, or both.
F. Luminaire: Complete lighting unit, including lamp, reflector, and housing.

1.3 ACTION SUBMITTALS

A. Product Data: For each type of luminaire.
B. Shop Drawings: For nonstandard or custom luminaires.
   1. Include plans, elevations, sections, and mounting and attachment details.
   2. Include details of luminaire assemblies. Indicate dimensions, weights, loads, required clearances, method of field assembly, components, and location and size of each field connection.
   3. Include diagrams for power, signal, and control wiring.
C. Delegated-Design Submittal: For luminaire supports.
   1. Include design calculations for luminaire supports.

1.4 INFORMATIONAL SUBMITTALS

A. Coordination Drawings: Plans, drawn to scale and coordinated.
B. Seismic Qualification Data: For luminaires, accessories, and components, from manufacturer.
C. Product Certificates: For each type of the following:
   1. Luminaire.
   2. Photoelectric relay.
D. Sample warranty.

1.5 CLOSEOUT SUBMITTALS

A. Operation and maintenance data.
   1. Provide a list of all lamp types used on Project. Use ANSI and manufacturers' codes.
   2. Provide a list of all photoelectric relay types used on Project; use manufacturers' codes.

1.6 FIELD CONDITIONS

A. Mark locations of exterior luminaires for approval by Architect prior to the start of luminaire installation.

1.7 WARRANTY

A. Warranty: Manufacturer and Installer agree to repair or replace components of luminaires that fail in materials or workmanship within specified warranty period.
   1. Warranty Period: 2 year(s) from date of Substantial Completion.

PART 2 PRODUCTS

2.1 PERFORMANCE REQUIREMENTS

A. Seismic Performance: Luminaires shall withstand the effects of earthquake motions determined according to ASCE/SEI 7.
B. Seismic Performance: Luminaires and lamps shall be labeled vibration and shock resistant.
   1. The term "withstand" means "the luminaire will remain in place without separation of any parts when subjected to the seismic forces specified."

2.2 LUMINAIRE REQUIREMENTS

A. Electrical Components, Devices, and Accessories: Listed and labeled as defined in NFPA 70, by a qualified testing agency, and marked for intended location and application.
B. NRTL Compliance: Luminaires shall be listed and labeled for indicated class and division of hazard by an NRTL.
C. UL Compliance: Comply with UL 1598 and listed for wet location.
D. Lamp base complying with ANSI C81.61 or IEC 60061-1.
E. CRI of minimum 80. CCT of 3500K.
F. L70 lamp life of 50,000 hours.
G. Lamps dimmable from 100 percent to 0 percent of maximum light output.
H. Nominal Operating Voltage: 277 V ac.
I. Lamp Rating: Lamp marked for outdoor use.
J. Source Limitations:
   1. Obtain luminaires from single source from a single manufacturer.
   2. For luminaires, obtain each color, grade, finish, type, and variety of luminaire from single source with resources to provide products of consistent quality in appearance and physical properties.

2.3 LUMINAIRE TYPES

A. Area and Site:
   1. Mounting: as indicated on drawings.
   2. Luminaire-Mounting Height: As indicated on drawings.
   3. Distribution: As indicated on drawings.
B. Canopy:
   1. Shape: Round.
   2. Dimensions: As indicated on drawings.

2.4 MATERIALS

A. Metal Parts: Free of burrs and sharp corners and edges.
B. Sheet Metal Components: Corrosion-resistant aluminum. Form and support to prevent warping and sagging.
C. Doors, Frames, and Other Internal Access: Smooth operating, free of light leakage under operating conditions, and designed to permit relamping without use of tools. Designed to prevent doors, frames,

lenses, diffusers, and other components from falling accidentally during relamping and when secured in operating position. Doors shall be removable for cleaning or replacing lenses.

D. Lens and Refractor Gaskets: Use heat- and aging-resistant resilient gaskets to seal and cushion lenses and refractors in luminaire doors.

E. Reflecting surfaces shall have minimum reflectance as follows unless otherwise indicated:
   1. White Surfaces: 85 percent.
   2. Specular Surfaces: 83 percent.
   3. Diffusing Specular Surfaces: 75 percent.

F. Housings:
   1. Rigidly formed, weather- and light-tight enclosure that will not warp, sag, or deform in use.
   2. Provide filter/breather for enclosed luminaires.

2.5 FINISHES

A. Variations in Finishes: Noticeable variations in same piece are unacceptable. Variations in appearance of adjoining components are acceptable if they are within the range of approved Samples and are assembled or installed to minimize contrast.

B. Luminaire Finish: Manufacturer's standard paint applied to factory-assembled and -tested luminaire before shipping. Where indicated, match finish process and color of pole or support materials.

C. Factory-Applied Finish for Aluminum Luminaires: Comply with NAAMM's "Metal Finishes Manual for Architectural and Metal Products" for recommendations for applying and designating finishes.
   1. Finish designations prefixed by AA comply with the system established by the Aluminum Association for designating aluminum finishes.
   2. Natural Satin Finish: Provide fine, directional, medium satin polish (AA-M32); buff complying with AA-M20 requirements; and seal aluminum surfaces with clear, hard-coat wax.
   3. Class I, Clear-Anodic Finish: AA-M32C22A41 (Mechanical Finish: Medium satin; Chemical Finish: Etched, medium matte; Anodic Coating: Architectural Class I, clear coating 0 inch or thicker) complying with AAMA 611.
   4. Class I, Color-Anodic Finish: AA-M32C22A42/A44 (Mechanical Finish: Medium satin; Chemical Finish: Etched, medium matte; Anodic Coating: Architectural Class I, integrally colored or electrolytically deposited color coating 0 inch or thicker), complying with AAMA 611.
      a. Color: Dark bronze.

D. Factory-Applied Finish for Steel Luminaires: Comply with NAAMM's "Metal Finishes Manual for Architectural and Metal Products" for recommendations for applying and designating finishes.
   1. Surface Preparation: Clean surfaces to comply with SSPC-SP 1, to remove dirt, oil, grease, and other contaminants that could impair paint bond. Grind welds and polish surfaces to a smooth, even finish. Remove mill scale and rust, if present, from uncoated steel, complying with SSPC-SP 5/NACE No.1 or SSPC-SP 8.
   2. Exterior Surfaces: Manufacturer's standard finish consisting of one or more coats of primer and two finish coats of high-gloss, high-build polyurethane enamel.
      a. Color:
         1) As selected from manufacturer's standard catalog of colors.

2.6 LUMINAIRE SUPPORT COMPONENTS

A. Comply with requirements in Section 260529 "Hangers and Supports for Electrical Systems" for channel and angle iron supports and nonmetallic channel and angle supports.

PART 3 EXECUTION

3.1 GENERAL INSTALLATION REQUIREMENTS

A. Comply with NECA 1.

B. Use fastening methods and materials selected to resist seismic forces defined for the application and approved by manufacturer.

C. Install lamps in each luminaire.

D. Fasten luminaire to structural support.
E. Supports:
    1. Sized and rated for luminaire weight.
    2. Able to maintain luminaire position after cleaning and relamping.
    3. Support luminaires without causing deflection of finished surface.
    4. Luminaire-mounting devices shall be capable of supporting a horizontal force of 100 percent of luminaire weight and a vertical force of 400 percent of luminaire weight.
F. Wall-Mounted Luminaire Support:
    1. Attached to structural members in walls.
G. Wiring Method: Install cables in raceways. Conceal raceways and cables.
H. Install luminaires level, plumb, and square with finished grade unless otherwise indicated.
I. Coordinate layout and installation of luminaires with other construction.
J. Adjust luminaires that require field adjustment or aiming. Include adjustment of photoelectric device to prevent false operation of relay by artificial light sources, favoring a north orientation.
K. Comply with requirements in Section 260519 "Low-Voltage Electrical Power Conductors and Cables" and Section 260533 "Raceways and Boxes for Electrical Systems" for wiring connections and wiring methods.

3.2 CORROSION PREVENTION

A. Aluminum: Do not use in contact with earth or concrete. When in direct contact with a dissimilar metal, protect aluminum by insulating fittings or treatment.
B. Steel Conduits: Comply with Section 260533 "Raceways and Boxes for Electrical Systems." In concrete foundations, wrap conduit with 0.010-inch- (0.254-mm-) thick, pipe-wrapping plastic tape applied with a 50 percent overlap.

3.3 IDENTIFICATION

A. Identify system components, wiring, cabling, and terminals. Comply with requirements for identification specified in Section 260553 "Identification for Electrical Systems."

3.4 FIELD QUALITY CONTROL

A. Inspect each installed luminaire for damage. Replace damaged luminaires and components.
B. Perform the following tests and inspections:
    1. Operational Test: After installing luminaires, switches, and accessories, and after electrical circuitry has been energized, test units to confirm proper operation.
    2. Verify operation of photoelectric controls.
C. Illumination Tests:
    1. Measure light intensities at night. Use photometers with calibration referenced to NIST standards. Comply with the following IES testing guide(s):
        a. IES LM-5.
    2. Operational Test: After installing luminaires, switches, and accessories, and after electrical circuitry has been energized, test units to confirm proper operation.
D. Luminaire will be considered defective if it does not pass tests and inspections.
E. Prepare a written report of tests, inspections, observations, and verifications indicating and interpreting results. If adjustments are made to lighting system, retest to demonstrate compliance with standards.

3.5 DEMONSTRATION

A. Train Owner's maintenance personnel to adjust, operate, and maintain luminaires and photocell relays.

END OF SECTION

SECTION 283100 - FIRE ALARM SYSTEM

PART 1 GENERAL

1.1 GENERAL AND SPECIAL CONDITIONS

A. Division 1 General Requirements of these specifications shall apply to the work in this section.

B. The Contractor shall furnish all equipment, materials, tools, labor, engineering, drawings, etc. necessary for a complete fire alarm system, with said systems being made ready for operation in accordance with the requirements of the authorities having jurisdiction. The purpose of Owner furnished specifications is to convey to the Contractor the scope of work required, all of which the Contractor is responsible to furnish, install, adjust, and make operable. The omission of any necessary system component as required by the authorities having jurisdiction or in the specifications shall not relieve the Contractor of the responsibility for providing such necessity, without additional cost to the Owner. The Contractor shall be responsible for examining all existing design documents, which may be material to the performance of his work. No extra payments will be allowed to the Contractor because of extra work made necessary by his failure to do so. Any case of error, omission, discrepancy or lack of clarify shall be promptly identified to the o and the Engineer for clarification prior to the bid due date.

C. The Contractor shall provide all devices and equipment required by these specifications. Under no circumstances will the Contractor delete any equipment or devices without the written directive of the Owner.

1.2 SCOPE OF WORK

A. Work provided under this section.

1. The scope of work for this project includes the installation of a new fire alarm system in the Morongo Combined Heating & Power (CHP) Project located at the Morongo reservation located in Cabazon, CA.
2. Furnish and install, unless otherwise indicated, all items required for a complete fire alarm and supervisory system, hardwired as outlined in these specifications. The work includes the following:
   a. Provide a new state of the art Edwards EST-4 fire alarm control panel.
   b. Provide new addressable initiating and control devices. The new devices will be connected to the new fire alarm control panel.
   c. Provide new notification appliances. The new notification appliances will be connected to the new fire alarm power supply.
   d. Provide all required programming necessary for the new fire alarm operating system.
   e. Provide a detailed installation schedule.
   f. Provide all associated equipment required for a complete operating system.
   g. Provide detailed terminal-to-terminal alarm system shop drawings, wiring diagrams, battery calculations, sequence of operation, and operating and maintenance instructions.
   h. Provide an on-site, factory-trained technician to supervise the installation acceptable to the owner.
   i. Provide an on-site Supervision Contractor.
   j. Conduct weekly progress meetings and issue weekly written job progress reports to the Owner’s Representative.
   k. Submit shop drawings and product data submittals to the (AHJ) for approval.
   l. Conduct a complete test of the fire alarm system upon completion of installation to assure the Owner’s Representative that the system is operational. This test shall take place prior to a final acceptance test by the AHJ.
   m. Provide a signed record of completion in accordance with NFPA 72 at the time of the final inspection. Copies of the record of completion shall be submitted to the Owner with the record drawings.
   n. Provide a one-year job site warranty of all materials and labor furnished under this section.
   o. Contract to perform quarterly maintenance until project is complete.
   p. Provide as-built drawings. The Contractor will be required to provide as-built drawings on in an approved electronic format, in addition to required drawings and PDFs.

1.3 SYSTEM ABBREVIATIONS AND DEFINITIONS

A. ADA – Americans with Disabilities Act.
B. AHJ – Morongo Reservation Fire Department
C. Approved – Unless otherwise stated, materials, equipment or submittals approved by the Owner, Architect or AHJ.
D. CBC – California Building Code.
E. CEC – California Electrical Code.
F. CFC – California Fire Code.
G. CMC – California Mechanical Code.
H. Central Processing Unit (CPU) – The central computer of a point addressable control system.
I. Concealed – The term concealed means embedded in masonry or other construction, installed behind wall furring or within partitions, or installed above suspended ceilings. Where used with conduit and accessories, shall mean, “hidden from sight.”
J. Contractor – The Company awarded the prime contract for this work and any of its subcontractors, vendors, suppliers, or fabricators.
K. CSFM – California State Fire Marshal.
L. Engineer – JENSEN HUGHES.
M. Exposed – Where used in connection with installation of piping or conduit and accessories, shall mean "visible" or "not concealed."
N. FACP – Fire Alarm Control Panel.
O. Factory Trained – The term Factory Trained is defined as specific training by the manufacturer of the installed product. All on-site technical and supervisory personnel are expected to be trained and familiar with all aspects of the installed product.
P. FCC - Fire Command Center.
Q. FM – FM Global.
R. Furnish – Except as otherwise defined in greater detail, the term "furnish" is used to mean supply and deliver to the project site, ready for unloading, unpacking, assembly, installation, and similar operations, as applicable in each instance.
S. General Explanation – A substantial amount of specification language consists of definitions of terms found in other Contract Documents, including Drawings. (Drawings are recognized as being diagrammatic in nature and not completely descriptive of the requirements indicated thereon). Certain terms used in Contract Documents are defined in this article. Definitions and explanations contained in this Section are not necessarily either complete or exclusive but are general for the Work to the extent that they are not stated more explicitly in another element of the Contract Documents.
T. General Requirements – The provisions or requirements of other Division 1 Sections apply to entire work of the Contract and where so indicated, to other elements which are included in the project. Where conflicts exist between this section and Division 1 Sections, the Division 1 Sections take precedent over this section.
U. Indicated – The term "indicated" is a cross reference to graphic representations, notes or schedules on drawings, to other paragraphs or schedules in the specifications, and to similar means of recording requirements in the Contract Documents. Where terms such as "shown," "noted," "scheduled," and "specified" are used in lieu of "indicated," it is for purpose of helping the reader locate cross references, and no limitation of location is intended except as specifically noted.
V. Install – Except as otherwise defined in greater detail, the term "install" is used to describe operations at the job site, including unloading, unpacking, assembly, erection, placing, anchoring, mounting, connecting, testing, protecting and cleaning, placing in working condition and similar operations, as applicable in each instance.
W. Installer – The term "installer" is defined as the entity (person or firm) engaged by the contractor, its subcontractor or sub-subcontractor for performance of a particular unit of work at the project site. It is a general requirement that such entities (installers) be expert in the operation they are engaged to perform.
X. Listed – Materials or equipment included in a list published by a nationally recognized laboratory that maintains periodic inspection of production of listed equipment and material, and whose listing states either that the equipment or materials meets nationally recognized standards or has been tested and found suitable for use in a specified manner.
Y. NFPA – National Fire Protection Association.
Z. Owner – Morongo Band of Mission Indians.

AA. Owners Representative – Morongo Facilities Department.
BB. UL – Underwriters Laboratories, Inc.

1.4 DESIGN CRITERIA

A. All new fire alarm equipment, devices, or appliances are to be listed for use with the new Edwards EST-4 System. No substitution requests will be accepted.
B. New devices, appliances, modules, or power supplies connected to the existing fire alarm system shall be compatible and listed for use with the current fire alarm control panels. All equipment shall be submitted for review and approval prior to installation.
C. The fire alarm system shall be provided with a continuous sounding evacuatin signaling system throughout the new Combined Heating & Power (CHP) project.
D. System circuit wiring:
   1. All point addressable signaling line circuits shall be Class B supervised circuits.
   2. All fire alarm and supervisory alarm initiating circuits shall be Class B electrically supervised circuits.
   3. All notification appliance circuits shall be Class B electrically supervised circuits from the fire alarm control panel to the devices.
   4. All initiating device and signaling line circuits shall be in continuous raceways.
   5. All wiring shall be new and installed in accordance with Article 760 of the CEC.

1.5 APPLICABLE CODES & STANDARDS

A. American National Standards Institute (ANSI) A117.1.
B. American National Standards Institute (ANSI) A17.1.
C. Americans with Disabilities Act (ADA).
D. California Building Code (CBC), 2022 Edition.
E. California Electrical Code (CEC), 2022 Edition.
F. California Fire Code (CFC), 2022 Edition.
G. California Mechanical Code (CFC), 2022 Edition.
H. National Fire Protection Association (NFPA) 72 – National Fire Alarm and Signaling Code, 2022 Edition.
I. Underwriters Laboratories (UL) 268A – Smoke Detectors for Duct Application.
J. Underwriters Laboratories (UL) Standard 268 – Smoke Detectors for Fire Protective Signaling Systems.
K. Underwriters Laboratories (UL) Standard 864 – Control Units and Accessories for Fire Alarm Systems, Ninth Edition.

1.6 SUBMITTALS

A. General:
   1. The Owner's Representative will review all submittals for conformance with the specifications. If submittals, upon review by the Owner's Representative, are found not to conform to the requirements of this specification, the Contractor shall be required to resubmit with modifications. Approval of the submittals by the Owner's Representative shall, in no case relieve the Contractor of the responsibility to meet the requirements of the specifications.
   2. All equipment shall be installed in accordance with the manufacturer's recommendations and the UL listing limitations. Compatibility listing requirements for fire alarm systems and addressable devices shall be met. The Contractor shall provide evidence, with the submittal, of compatibility listings of all proposed equipment and devices.
   3. Prior to the start of installation, the Contractor shall obtain and submit copies of all permits, licenses, and other approvals necessary to conduct the work from the Morongo Building Official and Fire Department.
   4. The Contractor shall include copies of all required qualifications and certificates listed in the specifications or requested by the owner as part of the permit application process.
   5. The Contractor shall be responsible for meeting Morongo Building and Fire Department policies and procedures for permitted construction work at this facility.
B. Equipment List/Product Data:

1. Prior to installation, but within 30 days of the date of commencement specified in the Notice to Proceed, the Contractor shall submit a minimum of five (5) copies (four for the Owner's Records, and one to return to the Contractor) of a detailed equipment list, identifying types, models and quantities of all materials, devices and equipment proposed. This submittal shall include manufacturer's data sheets showing the types and models of all equipment, devices, material, and wire proposed. Evidence of UL listings and CSFM listings shall be submitted with the data sheets. Where devices furnished by the Contractor involve work by another Contractor or Subcontractor, submit additional approved data sheets and shop drawing copies to that Contractor or Subcontractor.
2. Submit full sets of product submittals bound in protective binders. All data sheets shall be original manufacturer's literature or shall be clearly legible if reproducibles are provided. When a data sheet shows more than one product, the proposed product shall be clearly indicated by arrows or other suitable means.
3. Product submittals shall be submitted with shop drawings for complete review by the Owner's Representative.

C. Provide complete field software data, including point numbers, point descriptions, English messages, event-control descriptions, and sequence of operation. All data file programs are to be provided to the Owner's Representative.

D. Shop Drawings:
1. Prior to installation, but within 30 days of the date of commencement specified in the Notice to Proceed, the Contractor shall submit both hard-copy and electronic copies of shop drawings to the Owner's Representative for approval.
2. The shop drawings shall include all items, including but not limited to the following information:
   a. Scope of Work Description.
   b. A narrative for work.
   c. Sequence of operation for all new fire alarm equipment.
   d. List of all point numbers and point descriptions.
   e. Building floor plans drawn to scale, showing device locations; complete wiring and schematic diagrams, including number, size and type of conductors and conduit for both existing and new, wire color codes, and field terminations; control panel layouts, including all modules, circuit terminals and interconnections, overall cabinet dimensions, and panel front layouts; complete riser diagrams indicating wiring sequence for all devices and control equipment. Drawings shall show proposed layout and anchorage of equipment and appliances and equipment relationship to other parts of the work, including clearances for maintenance and operation. Prepare shop drawings at a minimum scale of 1/8-inch equals 1 foot for plans and 1/4-inch equals 1 foot for details.
3. Provide substantiating calculations, including calculations for determining secondary power supply requirements and voltage drop calculations. Battery calculations shall list the type of devices and modules, quantities, unit, and extended amperage draw for quiescent and alarm conditions, total amperage draw, and battery amp/hour rating. Battery recharging period shall be included with the calculations. For design criteria, the battery amp/hour-rating list by the manufacturer shall be derated by 20 percent.
4. Prior to purchase or fabrication of any material, approval in writing shall be obtained from the Owner's Representative. Any installation conducted prior to receiving written approval shall be the Contractor's responsibility.
5. Submittals must include shop drawings and product data sheets. Partial submittals are not acceptable and will be returned to the contractor as unacceptable.

E. Provide a preliminary installation schedule. The schedule shall be based on the work specified in this document and as shown on the drawings.

F. Provide a test plan for the fire alarm. The descriptions shall include operational procedures and examples of test forms for work on the new system.

G. Submittals rejected by the Owner's Representative shall be corrected and resubmitted within fourteen (14) days of the review letter date.

H. After the Owner's Representative has approved the submittals, then the submittals shall be submitted to the AHJ for final permit approval prior to installation.

1.7 GUARANTEE

A. The Contractor shall guarantee all materials and workmanship for a period of one year beginning with the date of final acceptance of the entire project by the AHJ. The Contractor shall be responsible during the design, installation, testing and guarantee periods for any damage caused by his (or his subcontractors') work, materials, or equipment.

B. The Contractor shall provide a one-year written guarantee against defects in material and workmanship furnished under this Contract. The costs of such guarantee shall be part of the purchase price. The guarantee commences when the Owner's Representative accepts the system and installation in writing.

C. The guarantee shall include all necessary material, travel, labor, and parts to replace defective components or materials at the job site. The Contractor shall commence repair of any "in guarantee" defects within 18 hours of notification of such defects.

D. The Contractor shall make allowances in his guarantee to cover diagnosis of system defects that might ultimately be the responsibility of others to correct. When this occurs, the Owner's Representative and other affected trades shall be notified.

E. The warranty shall include all necessary factory and field software required to perform the specified tasks. This item does not include software installed at the system acceptance unless the defective software was installed at the direction of the system manufacturer.

F. The Contractor shall include, as part of the one-year warranty, a test and inspection of the entire fire alarm system at least one month prior to the expiration of the one-year construction warranty. The Contractor shall provide a written report of any deficiencies and repair any of the deficiencies. The test and report shall conform to the certification as described in NFPA 72.

1.8 BASE BID

A. The Base Bid price shall include the total cost, including all required parts, equipment, programming, and associated labor to provide a code-compliant fire alarm system based on the design documents issues by the project architect.

1.9 UNIT PRICING

A. Provide separate unit pricing for the listed items. These prices are to include the device, 50 feet of all required conduit and wire, CAD engineering, programming, labor, AHJ review, and any other required installation costs to add the device or component.

B. Unit Pricing will be used for deletions and additions and should include all associated costs from delivery to final acceptance testing.

   a. Intelligent Smoke Detector with Base
   b. Intelligent Heat Detector with Base
   c. Addressable Duct Smoke Detector With 3' to 6' Sample Tubes
   d. LED Horn/Strobe – Multi-candela wall mount
   e. LED Horn/Strobe – Multi-candela wall mount and weather-proof
   f. LED Strobe – Multi-candela wall mount
   g. LED Strobe – Multi-candela wall mount and weather-proof
   h. Addressable Output Control Relay Module
   i. Addressable Input Monitoring Module
   j. Addressable Manual Pull Station

1.10 PRODUCT DELIVERY

A. Delivery of Materials: Delivery of all materials and equipment to the job site shall be coordinated with the owners designated representative.

B. Storage of Materials, Equipment, and Fixtures: The Contractor shall be responsible for storage of materials. Any materials stored on site shall be pre-approved and coordinated with the owner's designated representative.

C. Handling Materials and Equipment: Contractor shall be responsible for on-site handling of materials and equipment. The Contract shall comply with existing Morongo Safety Policies.

1.11 QUALITY ASSURANCE

A. Codes and Standards:
   1. Provide materials and workmanship complying with the Gaming Compact, NFPA 72, the CEC, and other applicable codes, laws and ordinances of Federal, State, and local governing bodies having jurisdiction.
   2. In case of differences between building codes, the Compact, State and Federal laws, local ordinances, utility company regulations and the Contract Documents, the most stringent is to govern.
   3. Should work be performed that does not comply with the requirements of NFPA 72, the CEC, and applicable local codes, State and Federal laws, local ordinances, industry standards, and utility company regulations, the work is to be made to comply with such requirements at no additional cost to the Owner.
   4. In the event that additional equipment or installation requirements are made by the local AHJ, conformance with their regulations is mandatory and any extra costs involved are to be included in the Contract, with the exception of extra facility charges and other charges that are paid directly by the State.

B. The Contractor shall maintain a fully staffed office including application engineers, drafters, and technical service personnel within the Southern California region.

C. All technical service personnel shall be NICET certified and factory trained by the fire alarm system manufacturer. Proof of certification and training shall be provided as part of the submittals.

D. All electrical installation of the fire alarm system, including wire installation and terminations, shall be performed by the electricians in the employ of the installing Contractor.

E. All contractors shall be subject to policies and procedures in use at the facility.

1.12 JOB CONDITIONS

A. Maintain the premises free from accumulation of waste materials or rubbish caused by this work at all times to the Owner's standard for cleanliness. Finished flooring shall be protected from damage and continuous cleanup will be the responsibility of the Contractor.

B. At the completion of each workday, remove all surplus materials, tools, etc. and leave the premises clean to the Owner's standard of cleanliness.

1.13 EMERGENCY SERVICE

A. The Contractor shall provide emergency repair service for the fire alarm system within four hours of a request for such service by the owner during the guarantee period. This service shall be available on a 24-hour per day, seven-day per week basis.

1.14 TRAINING

A. The Contractor shall conduct 2 training sessions of two hours each to familiarize the facility personnel with the features, operation, and maintenance of the fire alarm system. All training sessions shall be video recorded for the Owner's records. The training sessions shall be scheduled for a mutually agreeable time for the Contractor and the owner.

1.15 PERMITS AND FEES

A. The Contractor shall be responsible for payment of all permits, fees, and charges required for this work.

B. The Contractor shall be responsible for meeting all plan review submittal requirements of the Morongo Reservation Fire Department.

PART 2 MATERIALS

2.1 MANUFACTURERS

A. Acceptable fire alarm equipment acceptable for use shall be listed for use with the new Edwards Systems Technologies (EST) fire alarm system.

B. Products for this project shall be of the latest design; obsolete or discontinued products will not be acceptable. All equipment supplied shall be UL and California State Fire Marshal (CSFM) listed for required function.

C. All control equipment for this project shall be UUKL listed for smoke-control.

2.2 INSTALLATION

A. All wire and cable shall be new and UL listed and/or approved for use in fire alarm signal systems per NFPA 70, Article 760. All wire shall be solid conductors of copper, minimum size of No. 18 AWG.

B. Manufacturer's recommended wire type and gauge shall be used. If the fire alarm manufacturer specifies wire from a specific manufacturer(s), this wire shall be used unless the fire alarm manufacturer indicates in writing that other wire manufacturers are considered equal.

C. All wiring shall be appropriately color-coded, and permanent wire markers shall be used to identify the terminations for each circuit at the control panel.

D. All wiring shall be in enclosed raceways.

E. Splices shall be kept at a minimum. Splices shall only be made in outlet boxes, junction boxes, and pull boxes.

F. All conduit, junction boxes, field terminal cabinets, and fittings shall conform to the following:

1. Conduit:

a. All conduits shall be stamped with the name or trademark of the manufacturer and shall bear the UL label.

b. All conduit sizes shall be 3/4-inch minimum.

c. Electrical metallic conduit (EMT) shall be installed in accordance with the CEC.

d. Rigid steel conduit shall be used in areas where conduits may be exposed to physical damage. All rigid conduit shall be installed in accordance with the CEC.

e. Conduit sizes shall be such that the required number and sizes of conductors can be easily pulled thorough and the Contractor shall be responsible for the selection of the appropriate conduit sizes. Conduit exposed to weather shall comply with the requirements of the CEC.

f. All fittings and conduit bodies shall be listed and approved for the specific conduit.

g. Flexible metal conduit shall only be used to connect T-bar ceiling mounted devices to the signaling line conduits. No run of flexible conduit shall exceed 6 feet in length.

h. For threaded rigid steel conduit threadless or compression-type fittings are not permitted.

i. All EMT conduit fittings shall be steel or malleable iron "concrete-tight" or "rain-tight" compression type couplings and connectors. Set screw, indentation type, or cast iron fittings are not permitted.

j. Conduits installed above T-Bar grid type suspended ceilings shall be installed in such a manner that they do not interfere with accessing the ceiling space. All conduits shall be installed to run parallel with the suspended ceiling grid. The use of suspended ceiling grid support wires for conduit support is not permitted.

k. Install expansion fittings for conduits passing across all expansion and seismic joints. All expansion fittings must be approved prior to installation.

l. Liquid tight flexible metal conduit shall be used for spanning all exterior seismic and expansion joints. Pull boxes shall be installed on each side of all seismic and expansion joints. The Contractor is responsible for providing proper allowances for spanning all expansion and seismic joints.

m. All conduit shall be installed in a neat and workman like manner in accordance with approved industry standards and the CEC.

n. Conduit shall be red.

2. Junction and Pull Boxes:

a. Shall be installed in accordance with the CEC, State or local codes.

b. Provide galvanized sheet steel junction and pull boxes, with screw-on covers and of types, shapes, and sizes to suit each respective location and installation.

c. Boxes exposed to weather, moisture, at or adjacent to water or steam connections, at sprinkler waterflow switches and supervisory switches shall be corrosion-resistant, cast-metal weatherproof outlet boxes of types, shapes, and sizes, including depth of boxes with threaded conduit ends and face plate gaskets and corrosion-resistant fasteners.

d. Each box shall be large enough to accommodate required splices and conduit in accordance with the CEC.
e. Sectional boxes shall not be used.
f. All boxes shall be painted red or otherwise designated for identification as part of the fire alarm system.
g. All boxes shall be supported as required by the CEC.

3. Fire Alarm Terminal Cabinets (FATC):
   a. FATC's shown on the bid documents are to be used and be capable of supporting all new control modules, wiring, and associated equipment.
   b. Terminal strips shall be provided and numbered for all new wiring with a list of all terminations shall be permanently affixed to the inside cover of all terminal cabinets.
   c. Terminal cabinets shall be identified as part of the fire alarm system on the outward face of the cabinet.
   d. FATC's shall be a minimum of 12x12 and meet the requirements listed above.

G. Components shall be UL listed. Wiring methods shall conform to the CEC, Sections 760 and 800.

2.3 CONTROL EQUIPMENT

A. Fire Alarm Control Panels (FACP):
   1. The new EST fire alarm control will be located in Entry Vestibule 100 as indicated on the drawings.

2.4 POWER SUPPLY

A. Provide all required system power supplies, including necessary transformers rectifiers, regulators, filters, and surge protection required for system operation, with the capacity to power the system in a worst-case condition with all devices in alarm and all local indicating appliances active without exceeding the listed ratings. All system devices shall display normal and alarm conditions consistently whether operating from normal power or reserve (standby) power.

B. Surge protection shall be supplied at the power input to each cabinet. The surge suppression shall be of the phase to neutral (normal mode suppression). Phase to ground devices, MOV based devices and pure inductive devices shall not be considered acceptable. Protection shall also be furnished for SLC and NAC circuits where exiting and entering any structure, connected prior to any system devices within the structure.

C. Standby power source shall meet the requirements for standby capacity as detailed in NFPA 72, i.e. supervisory for 24 hours in standby mode and sufficient power to provide the full audible visual notification for 5 minutes in alarm mode.

D. Transfer from AC to battery power shall be instantaneous when AC voltage drops to a point it is not capable of normal operation.

E. System charger shall provide recharge of batteries to full capacity in 48 hours.

2.5 POINT ADDRESSABLE SYSTEM SOFTWARE

A. The installing contractor will be responsible for all required programming of the operating system program.

B. As part of the base system installation, provide all executive system software to include, but not be limited to the following:
   1. Basic alarm processing programs.
   2. Control by event programs.
   3. System point scanning routines.
   4. Password control routines.
   5. Emergency file display routines.
   6. Printer routines.
   7. Smoke detection sensitivity reports.

C. Provide as part of other system all preparation and installation of data file including, but not limited to, the following:
   1. Zone descriptions.
   2. Control by event sequences.
   3. Emergency file statements.

4. Print statements.
5. Password installation.

D. Point/zone descriptions shall consist of English language statements, which adequately define the point or zone. The use of abbreviations shall be limited to commonly used fire alarm system abbreviations.

E. System emergency file statements shall be assigned to individual points/zones to assist the operator response to an emergency condition. The emergency file shall consist of English language statements, which adequately define the desired action.

2.6 ALARM & SUPERVISORY INITIATING DEVICES

A. Alarm and supervisory initiating devices connected to the new fire alarm control equipment must be listed for use with the fire alarm control equipment manufacturer. The Contractor shall provide documentation that the devices are compatible with the new fire alarm control equipment.

B. Waterflow switches and valve tamper switches shall be wired and adjusted under this section by the alarm contractor. The switch shall actuate within 90 seconds after the inspector's test valve is opened. Initial setting of new waterflow switch activation shall be 30 seconds. Addressable point monitoring devices shall be provided to monitor waterflow, valve tamper switches, and high/low water switches. The wiring from the monitored device to the point-monitoring device shall be a Class B electrically supervised circuit. The point monitoring device shall send an individual address to the fire alarm control panel.

2.7 NOTIFICATION APPLIANCES

A. Provide new LED Audible/Visual alarm appliances and circuits to provide occupant notification where required by the project scope of work.

2.8 CONTROL DEVICES

A. Provide new control devices where required by the scope of work for this project.

B. Listed control devices used for the activation of fire suppression systems or similar releasing equipment shall be connected to the new system. Control relays connected to unsupervised circuits shall be located within 3 feet of the controlled device.

C. Provide control relays/contacts for fan shutdown and HVAC equipment sequencing where required. The control relays/contacts shall be 24-volt DC low voltage type, each with number of contacts as required and housed in metal enclosure. The contacts shall be rated as required for continuous duty.

D. Provide control relays/contacts for any fire/smoke dampers.

PART 3 EXECUTION

3.1 SYSTEM OPERATION

A. The addressable fire alarm and supervisory system’s sequence of operations shall be in accordance with the approved code-of-record drawings and shall perform the following functions:
1. Continuous monitoring of the status of all fire alarm and supervisory signal initiating devices.
2. Continuous monitoring of all electrically supervised fire alarm initiating, supervisory and notification appliance circuits.
3. Continuous monitoring of all addressable modules.
4. Operation of elevator controls as required.
5. Operation of all audible and visual signals as required.
6. Operation of all required HVAC controls as required.
7. Transmission of alarm, trouble, and supervisory signals to the UL listed central station.

B. Upon change in status of any device on the system, the CPU shall:
1. Activate audible and visual status change indicators and display the system point number, point description, and message associated with the point on the system’s operator terminal.
2. Permanently record the change in status, time, date, point description, and message associated with the point on the printer.

C. Activation of any manual fire alarm station, waterflow switch, smoke detector, heat detector, duct smoke detector, sprinkler supervisory valve or other fire alarm initiating device shall cause the functions described

in the sequence of operations on the drawings. Contractor shall verify the sequence of operations and modify the sequence prior to submittal to the AHJ if necessary.

3.2 SYSTEM INSTALLATION

A. The Equipment Manufacturer shall furnish on-the-job supervision for the proper installation of devices in cooperation with, or as may be required by, other trades. This supervision shall include the following:
   1. Specific on-site instructions to others on mounting and installation of each type of device by physically observing the mounting of one or more of each type of device, as required, to assure that the installer is properly instructed in the work.
   2. Supervision as required by others to properly perform alarm installation work.
   3. A complete test of the system, certifying that all devices have been activated and that the devices and systems have performed in accordance with the requirements of this specification.
   4. Install, test, troubleshoot, and correct all system software provided under this specification. This includes, but is not limited to, actual keyboard entry, reprogramming required to meet this specification, and any other tasks associated with the system software.
B. All work shall be installed and replaced as indicated and in accordance with the manufacturer, unless otherwise specified.
C. Contractor shall furnish all material and labor to provide a complete and functional system, which operates in accordance with the requirements of this specification. This shall include the following:
   1. Conduit, raceway and wiring systems as indicated herein, and throughout the specifications, and shown on the drawings.
      a. All wiring shall be appropriately color-coded, and permanent wire markers shall be used to identify the terminations for each circuit at the control panel.
      b. Strap or bundle all cables and wires inside equipment enclosures and terminal cabinets, parallel to the enclosure sides.
      c. Splices shall be kept at a minimum. Splices shall be made in outlet boxes, junction boxes, and pull boxes. All fire alarm electrical box covers shall be red with white letters “FA.”
      d. All penetrations in walls shall be filled with UL fire-stopping material capable of maintaining the fire-resistance of the fire barriers.
D. Pay for and obtain all permits, approvals, fees, and charges required for this work.

3.3 TEST/FIELD QUALITY CONTROL

A. The final alarm acceptance test shall be coordinated with the Owner. A letter certifying that the installation is complete and fully operational shall be forwarded to the Owner.
B. The Contractor and an authorized representative from each supplier of equipment shall be in attendance at the final acceptance test to make necessary adjustments. The final test shall include, but not be limited to:
   1. A test of the complete system for grounded, open, and shorted circuits.
   2. A test of each alarm-initiating device for functions specified and for the required alarm actions.
   3. A test of the system for electrical supervision.
   4. A test to verify that the emergency power source is capable of operating the system for specified periods.
   5. A test to verify that alarm signals will operate under specified trouble conditions.
   6. A test to verify that the system will operate under specified trouble conditions.
   7. A test to verify that the system will perform all specified tasks.
   8. A test to verify that a hard copy of all required system actions will be properly provided.
C. If the system requires a retest, all costs for the retest shall be the responsibility of the Contractor.
D. The Contractor shall pay all overtime pay required by the AHJ for witnessing the acceptance test.
E. Contractor shall be present at other related tests, including but not limited to automatic sprinklers.

3.4 TRAINING

A. Provide training of Owner’s personnel in the proper operation procedures. The training program for the Owner’s personnel shall include the following:

1. Operations and Maintenance Manuals in binder, containing complete operating instructions, outlining step-by-step procedures required for system start up, operation, and shut down, including the manufacturer's name, model number, service manual, parts lists, and brief description of all equipment and their basic operation features. Complete maintenance instructions listing routine maintenance procedures, possible breakdowns and repairs, trouble-shooting guide, and as-built drawings of the complete system, including conduit layout, equipment layout, device labels, and simplified wiring and control diagrams of system. Six Operations and Maintenance Manuals shall be submitted and approved prior to conducting the training course.
2. Two separate 2-hour training sessions for operating personnel. All training sessions shall be video recorded for the Owner's records.
3. The sessions are to cover proper operating and response procedures. These instructions shall be sufficient to enable an untrained person to properly operate the system.
4. Provide software manuals containing listings of all points, event programs, basic programming and instructions, and software troubleshooting information.

3.5 AS-BUILT DRAWINGS

A. Before acceptance of work and final completion, the record set of prints shall be used to prepare "As-Built" drawings in AutoCAD 2023, reflecting any and all changes and deviations made to the fire alarm system. The drawings shall indicate, at the minimum, the following:
   1. As-built physical routing of wires to devices, including junction box locations.
   2. As-built riser diagram showing the zoning of signaling line circuits.
   3. As-built panel wiring diagrams of the fire alarm control panel(s).
   4. Floor plan showing each alarm-initiating device, notification appliance, control and monitoring point with their respective address identification number (i.e., an address of (5-24) for the 24th device on circuit 5).
B. Upon completion of the work, electronic copies of the record drawings shall be submitted for review.
C. Provide a complete set of "as-built" data sheets for all equipment connected to the system.
D. Provide an address list showing, for each device, the address, device type, location, and field custom message.
E. Provide a copy (on CD) of the software used to program the system.
F. Provide a hard copy printout showing the programmable options and how each option is implemented in the system.
G. Provide a completed test form that complies with NFPA 72, signed and dated by the fire alarm system manufacturer or his agent.
H. Provide NFPA 72 completion certificate, signed by the AHJ.
I. All items of this section shall be provided prior to final payment request

END OF SECTION 283100

SECTION 310000 - EARTHWORK

PART 1 GENERAL

1.1 SUMMARY

A. The following are addressed in this Section:
   1. Excavation, Trenching, and Stockpiling.
   2. Excavation Support Systems.
   3. Backfilling and Compaction.
   4. Grading.
   5. Import Soil.
   6. Fill Material.
   7. Surplus Soil.
   8. Non-Hazardous Waste.
   9. Non-RCRA California-Hazardous Waste.
   10. TSCA-Hazardous Waste.
   11. VOC-Contaminated Soil.
   12. Stained or Odorous Material.
   13. Liquid Waste.

B. Per the requirements of this Section, Contractor shall perform all earthwork, to the lines, grades, and elevations as specified and shown by the Contract Documents including: [NOTE TO DESIGNER: DESIGNER IS RESPONSIBLE TO MODIFY THE LIST BELOW TO MATCH THE PROJECT SCOPE OF WORK.]
   1. Excavation of on-site Soil as shown on the Drawings, including but not limited to excavation for utility trenches, microtunneling pits, structures, foundations, substructures, pavements, and underground demolition.
   2. Re-handling of excavated Soil determined to be Fill Material and used as Backfill Material.
   3. Testing, characterization, loading, hauling, and placement of Import Soil.
   4. Testing, characterization, loading, and hauling of Soil.
   5. Placement, moisture control, compaction, and grading of Bedding, Backfill Material and Structure Backfill Material.
   6. Preparation of subgrades for slabs-on-grade, pavements, subsurface utilities, subsurface structures, and foundations.
   7. Providing shoring, sheeting and bracing required for temporary support of existing utilities and structures during excavation, for installation of new utilities and backfill operations, and for worker protection in excavations.

C. Per the requirements of this Section, Contractor shall manage excavated Soil characterized as Waste and perform the following Work, to the lines, grades, and elevations as specified and shown by the Contract Documents, including: [NOTE TO DESIGNER: DESIGNER IS RESPONSIBLE TO MODIFY THE LIST BELOW BASED ON RESULTS OF ENVIRONMENTAL INVESTIGATION, DESIGNER'S INTERPRETATION OF THE INVESTIGATION DATA AND PROJECT SOIL USES.]
   1. All material for disposal must be stockpiled prior to being tested and characterized. Additional testing required due to Contractor's failure to stockpile will be at Contractor's expense.
   2. Soil Material unsuitable for reuse shall be disposed of outside the Harbor District per the Contract Documents. All excess soil material shall be disposed of outside of the Harbor District. There shall not be soil reuse beyond the Project Limits.
   3. Stained or Odorous Material encountered during earthwork shall be excavated, segregated, stockpiled, tested, characterized, profiled, loaded, hauled, and disposed of at an approved offsite disposal facility or facilities as Non-Hazardous Waste, per the requirements of this Section.
   4. VOC-Contaminated Soil encountered during earthwork shall be excavated, segregated, stockpiled, tested, characterized, profiled, loaded, hauled, and disposed of at an approved offsite disposal facility or facilities as Non-Hazardous Waste, per the requirements of this Section. This includes VOC-Contaminated Soil encountered within the limits of the Ground Improvement area shown on the Drawings.

5. Soil characterized as Non-RCRA California-Hazardous Waste shall be excavated, segregated, stockpiled, tested, characterized, profiled, loaded, hauled, and disposed of at an approved offsite disposal facility or facilities per the requirements of this Section.
6. Soil characterized as TSCA-Hazardous Waste shall be excavated, segregated, stockpiled, tested, characterized, profiled, loaded, hauled, and disposed of at an approved offsite disposal facility or facilities per the requirements of this Section.

D. Per the requirements of this Section, Contractor shall manage Liquid Waste for disposal, which includes performing the following Work as specified and shown by the Contract Documents: [NOTE TO DESIGNER: REVISE THIS PARAGRAPH TO REFLECT THE LIQUID WASTE REQUIREMENTS OF THE PROJECT. DESIGNER IS RESPONSIBLE TO MODIFY THE LIST BELOW BASED ON RESULTS OF ENVIRONMENTAL INVESTIGATION AND ITS INTERPRETATION OF THE INVESTIGATION DATA.]
1. Liquid Waste characterized as Non-Hazardous Waste shall be removed, containerized, tested, characterized, profiled, loaded, hauled, and disposed of at an approved offsite disposal facility or facilities per the requirements of this Section.

E. Excavation of Soil identified in this Section shall be performed only to the extent necessary to facilitate construction activities as shown on the Contract Documents. The areas of Soil that have been pre-characterized as Non-Hazardous Waste, Non-RCRA California-Hazardous Waste, and TSCA-Hazardous Waste, are identified on the Drawings, and are not intended to indicate the only excavation areas where Waste may be encountered performing the Work. Irrespective of the areas identified on the Drawings, the Contractor may encounter Waste in excavation areas within the Project Limits. [NOTE TO DESIGNER: DELETE THE 2ND TO LAST SENTENCE AND REVISE THE LAST SENTENCE IF THERE ARE NO EXCAVATION AREAS NOT SHOWN AND IDENTIFIED ON THE DRAWINGS THAT REQUIRE SEGREGATION AND DISPOSAL AS NON-HAZARDOUS OR HAZARDOUS WASTE.]

F. Soil excavated outside the Non-Hazardous Waste, Non-RCRA California-Hazardous Waste, and TSCA-Hazardous Waste areas identified on the Drawings [NOTE TO DESIGNER: IF SUCH WASTE AREAS ARE NOT IDENTIFIED AND SHOWN ON THE DRAWINGS, KEEP THIS PARAGRAPH BUT DELETE SUCH STATEMENT FROM THIS SENTENCE.] shall be used on-site as Fill Material per the requirements of this Section, unless identified as Stained or Odorous Material, VOC-Contaminated Soil, and is not required to be environmentally tested unless otherwise shown on the Drawings. Soil excavated from areas that are required to be environmentally tested to determine on-site use as Fill Material are shown on the Drawings [NOTE TO DESIGNER: IN CONSULTATION WITH THE ENVIRONMENTAL PLANNING DIVISION, DETERMINE WHETHER ENVIRONMENTAL TESTING OF THE EXCAVATED SOIL IS REQUIRED TO DETERMINE USABILITY AS FILL MATERIAL.] and are not intended to indicate the only excavation areas where Soil may be encountered that is required to be environmentally tested. Irrespective of the areas identified on the Drawings, the Contractor may encounter Soil in excavation areas within the Project Limits that may be required per this Section to be environmentally tested.

G. Excavation, handling, stockpiling, testing, characterization, loading, hauling, and disposal of Soil from the performance of earthwork as specified and shown on the Contract Documents shall be performed per the requirements of this Section.

H. Management of Stained or Odorous Material shall be performed per the requirements of this Section. Areas where Stained or Odorous Material is expected to be encountered are shown on the Drawings. [NOTE TO DESIGNER: DELETE THE LAST SENTENCE IF SUCH AREAS ARE NOT IDENTIFIED AND SHOWN ON THE DRAWINGS.]

I. Management of VOC-Contaminated Soil, per the SCAQMD Rule 1166 Various Locations Permit or site-specific Contaminated Soil Mitigation Plan [NOTE TO DESIGNER: DESIGNER SHALL BE RESPONSIBLE FOR DETERMINING WHICH OF THESE 1166 PERMITS IS REQUIRED FOR THE PROJECT. REFER TO SC-5.4] shall be performed per the requirements of this Section. Areas where VOC-Contaminated Soil is expected to be encountered are shown on the Drawings. [NOTE TO DESIGNER: DELETE THE LAST SENTENCE IF SUCH AREAS ARE NOT IDENTIFIED AND SHOWN ON THE DRAWINGS.]

J. Earthwork also includes the environmental testing and management of both Import Soil and excavated Soil per the requirements of the Contract Documents and this Section.

1.2 DEFINITIONS

A. Active Dewatering: Removal of water from the ground without deploying effective measures to prohibit or limit groundwater intrusion and that results in the lowering of the Groundwater Table outside of trenching and excavation areas.

B. Backfill Material: Fill Material or Import Soil used for earthwork per the Contract Documents and shall conform to the requirements of this Section.

C. Base Material: Aggregate base course material that is part of the on-site pavement and roadway structural section free of deleterious material.

D. Bedding: Material placed under and/or around utilities and substructures, conforming to the requirements of this Section.

E. Cal/EPA: California Environmental Protection Agency.

F. Cal/OSHA: California Department of Industrial Relations, Division of Occupational Safety and Health Administration.

G. CCR: California Code of Regulations.

H. CFR: Code of Federal Regulations.

I. COPCs: Chemicals of Potential Concern - A substance that has the potential to affect human receptors adversely due to its concentration, distribution, and mode of toxicity.

J. ELAP: Environmental Laboratory Accreditation Program.

K. Exclusion Zone: Defined and secured Work area required for removal of Hazardous Waste per 29 CFR Part 1910.120.

L. Fill Material: Soil excavated within the Project Limits, but outside of areas where Stained or Odorous Material, VOC-Contaminated Soil, Hazardous Waste, or Non-Hazardous Waste is encountered; and is accepted for use within the Project Limits as Bedding or Backfill Material, per the Contract Documents.

M. Groundwater: Subsurface water that fills available voids in Soil to the extent that the Soil is saturated.

N. Groundwater Table: The surface of the Groundwater exposed to an atmospheric pressure beneath the upper limit of the Saturated Soil.

O. Hazardous Waste: Waste characterized as a RCRA-Hazardous Waste, a TSCA-Hazardous Waste, or a Non-RCRA California-Hazardous Waste.

P. Import Soil: Soil transported to the Project from a location outside of the Harbor District that is accepted for use as Bedding or Backfill Material within the Project Limits, per the Contract Documents. Import Soil shall comply with the requirements for fill material, as specified herein.

Q. Liquid Waste: Liquid, fluid, or sludge potentially containing local, State, and Federally regulated substances, other than Storm Water managed under the requirements of Special Conditions SC-18.1 of these Specifications, that is removed by the Contractor during the performance of the Work, per the requirements of this Section.

R. NIOSH: National Institute for Occupational Safety and Health.

S. Non-Hazardous Waste: Waste not characterized as: a RCRA-Hazardous Waste, a TSCA-Hazardous Waste, or a Non-RCRA California-Hazardous Waste.

T. Non-RCRA California Hazardous Waste: Waste characterized as a Non-Resource Conservation and Recovery Act (Non-RCRA), California-Hazardous Waste per 22 CCR Section 66261.

U. OCPs: Organochlorine Pesticides.

V. OSHA: U.S. Department of Labor, Occupational Safety and Health Administration.

W. PAHs: Polycyclic Aromatic Hydrocarbons.

X. PCBs: Polychlorinated Biphenyls.

Y. PPE: Personal Protective Equipment.

Z. ppmv: parts per million by volume.

AA. Profile Documentation: Characterization data, profiles and manifests required for offsite disposal of Waste.

BB. RCRA: Resource Conservation and Recovery Act.

CC. RCRA-Hazardous Waste: Waste characterized as a Resource Conservation and Recovery Act (RCRA) Hazardous Waste, per 40 CFR Parts 260 through 265.

DD. Saturated Soil: A condition in which voids in Soil are filled with water, resulting in poor bearing capacity and/or Soil “pumping” conditions.

EE. SCAQMD: South Coast Air Quality Management District.

FF. Soil: Sand, silt, or clay mixture or other solid material (e.g., gravel, rock), but excluding concrete and asphaltic debris.

GG. SSPWC: Standard Specifications for Public Works Construction (also known as the “Greenbook”).

HH. SSSP: Site Specific Safety Plan.

II. Stained or Odorous Material: Soil that exhibits visual or olfactory evidence of petroleum hydrocarbon or other contamination.

JJ. Standing Water: Accumulation of stagnant water found on the ground and in excavations, including but not limited to water that is void of movement by either natural or artificial means and including, but not limited to, moisture.

KK. STLC: Soluble Threshold Limit Concentration – Concentration of an organic or inorganic contaminant in a liquid extract that characterizes that Waste as hazardous per 22 CCR Section 66261.

LL. Storm Water: Water originating from rainfall events that results in surface water runoff or drainage.

MM. Structure Backfill Material: Backfill Material placed around structures per the requirements of the Contract Documents and conforming to the requirements of this Section.

NN. Surplus Soil Reuse Material: Soil that is tested and characterized as Non-Hazardous Waste, meeting the requirements specified herein, and accepted for reuse within the Harbor District.

OO. SVOCs: Semi-Volatile Organic Compounds.

PP. SWPPP: Storm Water Pollution Prevention Plan.

QQ. TCLP: Toxicity Characteristic Leaching Procedure - USEPA procedure to determine mobility of organic and inorganic contaminants to determine whether Waste is hazardous per 40 CFR Part 261.24.

RR. TPH: Total Petroleum Hydrocarbons.

SS. TSCA: Toxic Substances Control Act.

TT. TSCA-Hazardous Waste: Waste Characterized as a Toxic Substances Control Act (TSCA) Polychlorinated Biphenyl (PCB) Hazardous Waste, per 40 CFR Part 761.

UU. TTLC: Total Threshold Limit Concentration - Concentration of an organic or inorganic contaminant in a Solid Waste that characterizes that Waste as hazardous per 22 CCR Section 66261.

VV. USEPA: U.S. Environmental Protection Agency.

WW. VOCs: Volatile Organic Compounds.

XX. VOC-Contaminated Soil: Excavated soil with VOC vapor concentrations greater than 50 ppmv per SCAQMD Rule 1166.

YY. Waste: Solid, liquid, or gaseous material that is not suitable for its original intended purpose at the Site or a material characterized as a waste by a regulatory authority.

ZZ. Watertight: A joint, enclosure, or assembly that is designed and of such tight construction as to prohibit the entry of water.

AAA. Wet Conditions: Underground Work in direct contact with Saturated Soil.

1.3 REFERENCES

A. Environmental and Geotechnical Reports included in Appendix CC.

1. Information provided in these Appendices for pre-characterization of Soil is solely for bidding and health and safety considerations.
2. The information presented in these Appendices is representative of the subsurface conditions within the Project Limits.
3. The information presented in these Appendices is representative of the bid items included in this Section.
    a. Kleinfelder Inc. (Kleinfelder), 2023. East Expansion Project, Pier B On-Dock Rail Support Facility Program, Soil and Groundwater Sampling Investigation, Port of Long Beach, California. March 31.
    b. Kleinfelder Inc. (Kleinfelder), 2024. LA-04 Pump House Relocation Project, Soil and Groundwater Sampling Program, Existing Pump Station, Port of Long Beach, Long Beach, California. January 5.
    c. Kleinfelder Inc. (Kleinfelder), 2024. LA-04 Pump House Relocation Project, Soil and Groundwater Sampling Program, New Pump Station, Port of Long Beach, Long Beach, California. January 5.
    d. Kleinfelder Inc. (Kleinfelder), 2024. LA-04 Pump House Relocation Project, Soil and Groundwater Sampling Program, Proposed Piping Route, Port of Long Beach, Long Beach, California. January 5.
    e. Rubicon Engineering Corporation, 2025. Soil and Groundwater Investigation Report, North Yard Utilities and Pier B Street Widening Project. February 24.
    f. Tetra Tech, Inc., 2024. Final Site Assessment Report for Shoemaker Bridge Demolition, Long Beach, CA 90802. May 31.
    g. The Source Group, Inc. (SGI), 2020. Site Investigation Report for the HDR Parcel 88, Port of Long Beach, 1286 and 1332 West 9th Street, Long Beach, California. April 29.
    h. HDR, Geotechnical Design Report – LA-04 Pump Station Relocation and Storm Drain Realignment, Pier B On-Dock Rail Support Facility Program, August 2023.

B. ASTM D1556 - Standard Test Method for Density and Unit Weight of Soil in Place by the Sand-Cone Method.
C. ASTM D1557 - Standard Test Methods for Laboratory Compaction Characteristics of Soil Using Modified Effort (56,000 ft-lbf/ft3 (2,700 kN m/m3)).
D. ASTM D6938 - Standard Test Method for In-Place Density and Water Content of Soil and Soil-Aggregate by Nuclear Methods (Shallow Depth).
E. Cal/EPA: Regulations per CCR Title 22.
F. Cal/OSHA: Regulations per CCR Title 8.
G. HAZWOPER: OSHA Regulations per 29 CFR Part 1910.120.
H. RCRA: Regulations per 40 CFR Parts 260 through 265.
I. SCAQMD Rule 1166 – Volatile Organic Compound Emissions from Decontamination of Soil.
J. SCAQMD Rule 402 – Nuisance.
K. SCAQMD Rule 403 – Fugitive Dust.
L. SSPWC - Engineering Fabrics.
M. SSPWC - Earthwork.
N. SSPWC – Treated Soil, Subgrade Preparation, and Placement of Base Materials.
O. SSPWC – Underground Conduit Construction.
P. TSCA: Regulations per 40 CFR Part 761.
Q. USEPA: “Test Methods for Evaluating Solid Waste - Physical/Chemical Method” (SW-846; most recent version).

1.4 REGULATIONS

A. Contractor’s Work shall be carried out in conformance with applicable current local, State, and Federal laws, codes, ordinances and regulations of regulatory agencies having jurisdiction, including the furnishing of any required excavation drawings and supporting information to said authorities and the obtaining of permits.
B. Contractor shall comply with the specific permit and Waste acceptance criteria of each individual offsite facility used by the Contractor for recycling or disposal of Waste, at no additional cost to the City.
C. Contractor shall notify Underground Service Alert two (2) Working Days prior to commencing earthwork operations.
D. Contractor shall provide and comply with Contractor’s SCAQMD Rule 1166 Various Locations Permit for the project until the site-specific SCAQMD Rule 1166 Contaminated Soil Mitigation Plan is issued by the SCAQMD. Once the site-specific SCAQMD Rule 1166 Contaminated Soil Mitigation Plan is issued by the SCAQMD, the Contractor shall comply with this permit instead of the Contractor’s Various Locations Permit. [NOTE TO DESIGNER: INCLUDE ONLY IF A SITE-SPECIFIC SCAQMD RULE 1166 PERMIT IS EXPECTED TO BE OBTAINED BY THE PORT FOR THE PROJECT SITE. IF INCLUDED, DELETE PARAGRAPHS 1.05D AND 1.05F.]

1.5 QUALITY ASSURANCE

A. Prior to commencing Work, the Contractor shall examine the Contract Documents, inspect the Site, and note all conditions and limitations that may influence Work required by this Section.
B. Contractor shall provide the required geotechnical properties testing for import materials from all proposed sources.
C. Contractor shall utilize the following procedures for environmental and geotechnical testing and import of Import Soil from each proposed offsite source:
    1. Notify Engineer of proposed testing of each source.
    2. Coordinate with the Engineer to provide a representative to witness sampling of proposed source.
    3. Perform testing of Import Soil per requirements of this Section.
    4. Confirm that sample results conform to the Contract Documents.
    5. Submit Import Soil Environmental Characterization and Geotechnical Reports and Certificates of Compliance per the requirements of this Section to the Engineer for review and verification of conformance with Contract Documents.
    6. The Contractor shall observe the import operations each day at each source to confirm that such source(s) have been approved for use and to visually verify that all materials being loaded for transport match the appearance of the sample(s) tested. The Contractor is advised that the

Engineer may do the same. The license plate numbers of all trucks loaded at the approved source shall be recorded by the Contractor as the trucks are loaded. Provide a list of license plate numbers of all trucks from each source, prior to arriving at the Site, to the Engineer on a daily basis. If a comparison of the two lists indicates that trucks' imported material was not loaded at the approved source(s), all Import Soil delivered to the Site that day shall be subject to rejection by the Engineer and shall immediately be removed from the Site at no additional cost to the City.

7. The Engineer will require additional testing of Import Soil at no additional cost to the City, if the Engineer's observation of the Import Soil indicates that the Soil is not representative of the source(s) or sample(s) provided.
8. For Import Soil that does not meet the geotechnical or environmental requirements of the Contract Documents, upon notice from the Engineer, the Import Soil shall be immediately removed from the Site and replaced with Import Soil that complies with the requirements of this Section at no additional cost to the City.

D. Regulation Documents: Contractor shall maintain at all times one (1) copy at the office and one (1) copy in view at the Site, of the accepted Contractor's Removal, Storage, Transportation and Disposal Work Plan and all other Permits as specified in this Section or required by regulation or law, including addenda and revisions.

E. Access by Engineer: The Engineer may enter Exclusion Zones for brief periods of time, provided they have documentation of proper training and utilize appropriate PPE. Contractor shall provide all required safety briefings for the Engineer as required for safe entry and performance of duties.

F. Environmental Testing Laboratory: Contractor shall obtain the services of an environmental testing laboratory certified by the California Department of Public Health's Environmental Laboratory Accreditation Program (ELAP). Environmental testing laboratory shall not be affiliated with the Contractor. The Contractor's testing laboratory shall analyze all Soil and Liquid Waste samples submitted for chemical characterization by the Contractor.

G. Licensed Environmental Professional (Civil Engineer or Geologist): Contractor shall obtain the services of a Civil Engineer or Geologist licensed in good standing by the California Board for Professional Engineers, Land Surveyors, and Geologists with environmental experience in Soil and Waste sampling and Waste characterization. The Contractor's Licensed Environmental Professional or qualified designee shall provide full-time on-site supervision of the Soil and Waste sampling and Waste characterization activities associated with construction-related Soil handling and characterization and provide recommendations regarding the Waste characterization of such Soil for review by the Engineer. The qualifications of the Contractor's Licensed Environmental Professional shall comply with this Section.

1.6 SUBMITTALS

A. Contractor shall prepare and submit the items listed below in accordance with the requirements of Section 01 33 00, "Submittal Procedures". Each submittal shall be provided to the Engineer for review a minimum of twenty-one (21) calendar days (unless otherwise noted) before any earthwork proceeds.

1. Prior to hauling, Contractor shall submit Existing Pavement Investigation report. The Contractor-prepared report shall have photo documentation and a detailed narrative of pavement conditions within project limits. The Contractor shall be responsible for restoring the existing pavement surfaces to the condition as documented in the report and as accepted in the submittal, prior to Affidavit of Final Completion.
2. An Excavation Work Plan outlining intended excavation and backfilling procedures proposed for the Project.
3. Shoring system design and construction procedures including shop drawings and calculations prepared by a California licensed Civil or Structural Engineer for shoring conforming to the requirements of this Section. Shop drawing resubmittal to Engineer for review may be required if configuration or field conditions change. [NOTE TO DESIGNER: A BID ITEM FOR SHORING MUST BE INCLUDED IN PART 4 WHEN CONTRACTOR IS DESIGNING SHORING. REVISE AS NECESSARY BASED ON WHETHER CONTRACTOR OR THE DESIGNER DESIGNS THE SHORING. POLB SHOULD NOT BE PROVIDING SHORING PLANS.]
4. Steel plate design including shop drawings and calculations prepared by a California-licensed Civil or Structural Engineer for steel plates conforming to the requirements of this Section. Shop drawings shall include proposed method of pinning (anchoring) and asphalt concrete tapered edging. Shop drawing resubmittal to Engineer for review may be required if configuration or field conditions change, as directed by the Engineer. [NOTE TO DESIGNER: REVISE AS NECESSARY BASED ON WHETHER CONTRACTOR OR THE DESIGNER DESIGNS THE STEEL PLATES.] [ALTERNATIVE LANGUAGE

5. Hauling Plan: Contractor shall submit detailed hauling plan and comply with Section 01 55 26 “Traffic Control” [NOTE TO DESIGNER: INCLUDE THE CORRECT SECTION REFERENCE] . At a minimum, Plan shall include a map showing the route, BMPs, source sites (contact name, address, and phone number), hauling dates, hauling times, estimated trips per day, equipment to be used, necessary traffic control procedures, and methods to keep material off public streets.
6. Import Soil Environmental Sampling and Testing Plan: Contractor shall submit plan for sampling and testing of Import Soil sources for compliance with these Specifications.
7. Import Soil Geotechnical Sampling and Testing Plan: Contractor shall submit plan for sampling and testing of all sources of Import Soil (including crushed rock, Bedding, Backfill Material and Structure Backfill Material) that conforms to the geotechnical requirements of this Section. Geotechnical Soil testing shall be performed per applicable ASTM Methods.
8. Geotechnical Samples: Per the Import Soil Geotechnical Sampling and Testing Plan submittal, Contractor shall submit samples of not less than thirty (30) pounds of Import Soil for each proposed offsite source. Notify the Engineer in writing a minimum of two (2) Working Days in advance of taking samples so that the Engineer can observe the sampling.
9. Environmental Characterization Report: Contractor shall submit a soil characterization report in accordance with this Section.
10. Import Soil Geotechnical Report: Contractor shall submit chain of custody record for each sample (including contract number, identification of items tested, quantity of material tested, date test performed, name of tester, and acceptance criteria), laboratory data sheets, test results reports, and certificate of compliance with Contract Specifications for all Import Soil (including crushed rock, Bedding, Backfill Material, and Structure Backfill Material) obtained from proposed offsite sources.
11. Import Soil Testing Notification: Contractor shall submit written notice to the Engineer of Import Soil testing seven (7) calendar days prior to testing the Soil from the source.
12. Import Soil Hauling: Contractor shall submit written notice to the Engineer of Import Soil hauling two (2) Working Days prior to importing the Soil from the source.
13. Hauling Load Tickets: Contractor shall submit daily load tickets, with respective certified tare weights, from a licensed California Weighmaster for all corresponding loads hauled to or from the Work Site.
14. Notifications, Permits, and Approvals:
    a. Contractor shall notify the Engineer a minimum of fourteen (14) calendar days prior to the start of excavation of Soil.
    b. Contractor shall provide copies of required regulatory permits or approvals and appropriate regulatory agency notifications in accordance with permit requirements.
    c. Contractor shall provide all required notifications to the Engineer and applicable agencies in accordance with all permit requirements.
15. Removal, Storage, Transportation, and Disposal Work Plan: Contractor shall prepare and submit a Removal, Storage, Transportation and Disposal Work Plan that details the following:
    a. Sequencing of the Soil excavation work by location, estimated volume/tonnage, and type and characterization of Soil.
    b. Proposed locations and sizes of Soil staging and Soil storage areas within the Project Limits.
    c. Procedures for segregation of Soil.
    d. Locations, means, and methods for storing excavated Soil and Waste (including Liquid Waste) prior to transportation in accordance with applicable permits and the requirements of this Section. Provide materials of construction, type of puncture resistant lining material and provisions for spill containment and spill control. Storage containers for Hazardous Waste shall comply with 40 CFR Part 265.
    e. Locations, means, and methods for stockpile sampling and characterization of excavated Soil (and Liquid Waste) for disposal in accordance with this Section.
    f. Procedures for excavation, segregation, and stockpiling of Stained or Odorous Material and VOC-Contaminated Soil, if encountered during the performance of Work.
    g. Procedures for setting up Exclusion Zones around Work areas and decontamination areas at designated egress locations. Exclusion Zones shall be required if VOC-Contaminated Soil or Hazardous Waste is encountered.
    h. Procedures for decontamination of equipment used within Exclusion Zones.

i. Procedures and equipment associated with Soil excavation including excavation methodology, and initial PPE anticipated and required upgrades, in accordance with the Contractor's SSSP.

j. Procedures, equipment, and materials for vapor, dust, and odor suppression, including the specifications for any proposed commercial suppression agents or materials.

16. Field Screening Results and Reports:

a. For field screening (air monitoring) performed by Contractor, Contractor shall provide all field notes and results associated with screening potentially contaminated materials for VOCs, odor, and dust on a weekly basis.

b. All VOC monitoring and reporting shall be conducted by the Contractor in accordance with SCAQMD Rule 1166.

17. Environmental Testing Laboratory:

a. Contractor shall submit a qualifications package that shall include the name of analytical laboratory(ies) to be used by the Contractor, certified by the California Department of Public Health with ELAP Certification Number.

b. Analytical testing results from laboratories without an ELAP Certification Number shall not be accepted for characterization of Waste.

18. Licensed Environmental Professional: Contractor shall submit a qualifications package that shall include the resume of the California-licensed Professional Civil Engineer or Geologist, a description of three (3) representative projects completed within the last five (5) years by the proposed professional, and copy of license certificate. Representative projects shall include projects that have involved excavation, segregation, testing, characterization, profiling, and offsite disposal of a minimum of 2,000 tons of Soil contaminated with petroleum hydrocarbon contamination, including TPH, VOCs and SVOCs. Assignment of the Contractor's Licensed Environmental Professional shall be subject to review by the Engineer.

19. Disposal/Recycling Facilities: [DESIGNER TO VERIFY LOCATION LIST OF FACILITIES IS CURRENT AND ACCEPTING APPLICABLE MATERIALS] Contractor shall submit a qualifications package for any proposed disposal and/or recycling facility to be used, not already listed in Article 3.20 herein, per the requirements of this Section, that shall include the following:

a. Legal name, address, and contact information for the proposed offsite facility or facilities to be used for disposal/recycling of Waste.

b. Current regulatory permits, licenses and certifications demonstrating the regulatory status of the proposed facility or facilities to receive Waste for the specific Waste characterization(s) identified in this Section.

c. Statement from each proposed facility that it is fully licensed and permitted and not subject to regulatory investigation or undergoing review for renewal of its license.

20. Waste Characterization Report: Contractor shall prepare and submit Waste Characterization Report. Contractor's Licensed Environmental Professional shall review the environmental testing laboratory reports and prepare a summary report including recommendations for Waste characterization and disposition for review and approval by the Engineer prior to transport of any Waste per the requirements of this Section. The Waste Characterization Report shall be submitted to the Engineer within seven (7) calendar days of the Contractor's receipt of laboratory results. [NOTE TO DESIGNER: DETERMINE IF 7 CALENDAR DAYS IS AN APPROPRIATE DURATION FOR SUBMITTAL OF THE REPORT, BASED ON WHAT THE PROJECT CONSTRUCTION SCHEDULE CAN ACCOMMODATE.]

21. Waste Profile Documentation:

a. Contractor shall submit to the Engineer a completed Waste Profile application (including the Waste Characterization Report) for each Waste stream, prior to submittal to the proposed disposal facility or facilities.

b. Contractor shall submit copy(ies) of the approved Waste Profile Documentation from the Contractor's selected disposal facility or facilities a minimum of three (3) Working Days prior to transport of Waste (both Soil and Liquid Waste) to offsite facility or facilities.

22. Disposal Manifests:

a. Contractor shall submit completed sample manifest(s) for final disposition of Waste at offsite disposal facility or facilities selected by the Contractor a minimum of three (3) Working Days prior to transport of Waste to offsite facilities.

b. Contractor shall submit manifests to the Engineer a minimum of 48 hours prior to transport, per the requirements of this Section, for signature and record.

c. Contractor shall provide Generator Copy(ies) of all manifests to the Engineer within five (5) Working Days.

1.7 PROJECT CONDITIONS

A. The areas of Soil that have been pre-characterized as Non-Hazardous Waste, Non-RCRA California-Hazardous Waste, and TSCA-Hazardous Waste are identified on the Drawings, and are not intended to indicate the only excavation areas where Waste may be encountered within the Project Limits. [NOTE TO DESIGNER: REVISE THIS PARAGRAPH ACCORDINGLY. DELETE IF NO WASTE IDENTIFIED ON THE DRAWINGS. MODIFY PARAGRAPH FOR THE WASTE TYPES ON THE PROJECT.]

B. The quantities of Non-Hazardous Waste, and Non-RCRA California-Hazardous Waste indicated in the Schedule of Bid Items may exceed the quantity of excavation from the areas indicated on the Drawings where Waste may be encountered. The respective quantities indicated on the Schedule of Bid Items are an estimate of the anticipated quantities of Non-Hazardous Waste, Non-RCRA California-Hazardous Waste, TSCA-Hazardous Waste to be encountered in excavation areas within the entire Project Limits. Measurement and payment shall be at the appropriate Bid Prices for the actual quantity of the Work. [NOTE TO DESIGNER: REVISE THIS PARAGRAPH ACCORDINGLY. DELETE IF NO WASTE IDENTIFIED ON THE DRAWINGS OR IF QUANTITIES WERE ESTIMATED DIFFERENTLY. MODIFY PARAGRAPH FOR THE WASTE TYPES ON THE PROJECT.]

C. The Contractor may encounter Stained or Odorous Material or VOC-Contaminated Soil during excavation within the Project Limits. Contractor shall notify the Engineer immediately if Stained or Odorous Material or VOC-Contaminated Soil is encountered. Areas where Stained or Odorous Material or VOC-Contaminated Soil are expected to be encountered are shown on the Drawings. [NOTE TO DESIGNER: DELETE THE LAST SENTENCE IF SUCH AREAS ARE NOT SHOWN ON THE DRAWINGS.]

D. Contractor shall notify the Engineer immediately if a Non-Hazardous Waste described in the Contract Documents is characterized as a Hazardous Waste per the results of the Contractor's environmental testing.

E. Contractor shall notify the Engineer immediately if a Hazardous Waste described in the Contract Documents is characterized as a Non-Hazardous Waste per the results of the Contractor's environmental testing. [NOTE TO DESIGNER: DELETE THIS PARAGRAPH IF NO HAZARDOUS WASTE IS INCLUDED IN PROJECT SCOPE OF WORK.]

F. Contractor shall furnish qualified flagperson at no additional cost to the City where required based upon the Contractor's hauling plan and where required by the Contract Documents. Use of flagperson within the terminal requires review and acceptance from the Engineer.

G. At the end of work shift, Contractor shall barricade open excavations and post with warning lights and signage. The Contractor shall operate warning lights during hours from dusk to dawn each day and as otherwise required by the Contract Documents.

H. Contractor shall protect utilities, surface and subsurface structures, and facilities designated to remain in place from damage caused by settlement, lateral movement, undermining, washout, and other hazards created by excavation and backfill operations.

I. Contractor is advised that ocean water and tidally-influenced Groundwater shall likely be encountered during performance of Work. Groundwater elevations are identified on the Drawings. [NOTE TO DESIGNER: IT IS THE RESPONSIBILITY OF THE DESIGNER TO DETERMINE GROUNDWATER ELEVATIONS AND THEN TO DETERMINE IF THIS PARAGRAPH IS NECESSARY FOR THE PROJECT, AND EDIT THE FOLLOWING PARAGRAPH.]

1. The Contractor's Schedule of Bid Items for the work shall be based on performing the Work in standing water below elevation +7.5 feet Mean Lower Low Water (MLLW), irrespective of any information provided elsewhere in the Contract Documents.

1.8 ENVIRONMENTAL PROTECTION

A. Refer to Sections 02 81 00, "Transportation and Disposal of Hazardous Materials", and 02 82 13, "Asbestos Abatement", for handling, management and disposal of hazardous materials from demolition of utilities, substructures and aboveground structures. [NOTE TO DESIGNER: CONFIRM THAT THIS SECTION DOES INCLUDE APPROPRIATE DIRECTIONS FOR HANDLING OF HAZARDOUS MATERIALS OR IF THE PROJECT INCLUDES HANDLING OF HAZARDOUS MATERIALS DURING DEMOLITION.]

B. Offsite Precautions: Contractor's equipment, after coming in contact with Waste, shall not be allowed to pass outside the Project Limits, over existing onsite access roads, offsite public roads, outside terminal boundary, or other public and private property without decontamination and protection per the Contractor's

Removal, Storage, Transportation and Disposal Work Plan. Any such roads or property which are damaged or contaminated with Waste as a result of Contractor's operations shall be restored to original condition within ten (10) Working Days from notification by the Engineer, at no additional cost to the City, including any and all construction delays.

C. Air Quality (Vapor, Dust, and Odor) and Noise: During the execution of the Work, the Contractor shall adopt, implement, and conform to all regulatory requirements. All compliance obligations are exclusively the responsibility of the Contractor and shall be implemented at no additional cost to the City.

D. Storm Water Runoff Management: Storm Water shall be managed in accordance with Special Conditions SC-18 and the Contractor's SWPPP [NOTE TO DESIGNER: REPLACE WITH BMP CHECKLIST IF SWPPP DOES NOT APPLY TO PROJECT]. Any damage caused by Storm Water is exclusively the responsibility of the Contractor and shall be repaired within ten (10) Working Days at no additional cost to the City, including any and all construction delays.

E. Standing Water Quality: During the execution of the Work, the Contractor shall adopt, implement, and conform to the regulatory requirements and the Contractor's SWPPP [NOTE TO DESIGNER: REPLACE WITH BMP CHECKLIST IF SWPPP DOES NOT APPLY TO PROJECT]. Water entering excavations, if removed by the Contractor, shall be containerized, tested, and disposed or recycled as a Liquid Waste at an appropriate offsite facility selected by the Contractor at no additional cost to the City, per the requirements of this Section.

1.9 EXCAVATION SUPPORT SYSTEMS

A. The Contractor shall design, furnish, construct, maintain, and remove excavation support systems used to protect workers and existing facilities during Soil excavation and backfilling in accordance with the requirements of this Section.

PART 2 PRODUCTS

2.1 BEDDING

A. Bedding for storm drain shall be sand conforming to the requirements of this Section.

B. Bedding for water line shall be sand conforming to the requirements of SSPWC 200-1.5.3.

C. Except as otherwise specified, Bedding shall be sand, gravel, aggregate, or Backfill Material having a sand equivalent of not less than thirty (30) or having a coefficient of permeability greater than one and one half (1 ½) inches/hour. Bedding shall be free from organic matter, clay, and excessive fines. Bedding shall be free from products of demolition, rocks, and solid debris in excess of one (1) inch in their greatest dimension.

D. Import Soil for Bedding shall be used if quantities of Fill Material are insufficient to complete the bedding work. Engineer approval is required prior to importing Import Soil.

E. Import Soil used as Bedding shall conform to the requirements of this Section and the following gradation requirements as determined by applicable ASTM Methods: [NOTE TO DESIGNER: THE DATA LISTED BELOW MUST BE VERIFIED/ CALCULATED PER THE NEEDS OF THE PROJECT, OR DELETE LISTED VALUES AND MAKE REFERENCE TO GREENBOOK REQUIREMENTS.]

Sieve Size	Percentage Passing Sieve
1) 1-inch	100
2) No. 200	50

2.2 FILL AND BACKFILL MATERIAL

A. Backfill Material shall conform to SSPWC Section 300-4.1, except as modified herein. Backfill Material shall be free from organic matter, clay, and excessive fines. Backfill Material shall be free from products of demolition, rocks, and solid debris in excess of three (3) inches in their greatest dimension.

B. Fill Material meeting the Backfill Material requirements shall be used as Backfill Material. Import Soil for Backfill Material shall only be used if quantities of Fill Material are insufficient to complete the backfill work. Engineer approval is required prior to importing Import Soil.

C. Import Soil used as Backfill Material shall conform to the requirements of this Section and the following gradation requirements as determined by applicable ASTM Methods: [NOTE TO DESIGNER: THE DATA LISTED BELOW MUST BE VERIFIED/ CALCULATED PER THE NEEDS OF THE PROJECT, OR DELETE LISTED VALUES AND MAKE REFERENCE TO GREENBOOK REQUIREMENTS.]

Sieve Size	Percentage Passing Sieve
1) 3-inch	100
2) 2- inch	90
3) No. 200	50

D. Cement slurry used as Backfill Material shall be 1 ½ sack cement slurry.

2.3 STRUCTURE BACKFILL MATERIAL

A. Engineered fill free of organic matter and debris shall be used as Structure Backfill Material unless otherwise specified by the Contract Documents.

B. Structure Backfill Material for concrete vaults, maintenance holes and pull boxes shall be 3-sack cement slurry.

2.4 3/4-INCH CRUSHED ROCK

A. Three-quarter (3/4) inch crushed rock shall conform to the requirements of SSPWC Section 200-1.2.

2.5 HAULING EQUIPMENT

A. Trucks licensed for street use shall be used for hauling Soil across existing pavements. No “off-road” hauling equipment shall be permitted on any existing paved surfaces.

B. All trucks transporting Soil or Waste offsite shall comply with 22 CCR Part 66263.16 regarding design and construction to contain Soil and Waste.

2.6 TEMPORARY STEEL PLATES

A. Steel plates shall be designed by the Contractor to conform to the following conditions:

1. Steel plates shall be a non-skid type and support HS20-44 truck loading.
2. The following table shows the advisory minimum thickness of steel plates:

Trench Width	Minimum Plate Thickness
10 inches	½ inch
1 foot, 11 inches	¾ inch
2 feet, 7 inches	⅞ inch
3 feet, 5 inches	1 inch
5 feet, 3 inches	1 ¾ inch

3. For spans greater than 5 feet, 3 inches, a structural design shall be prepared by a California Registered Civil Engineer.

2.7 SHORING AND BRACING MATERIALS

A. Contractor shall provide material necessary for protective systems and accessories as required to safely shore and brace excavations for worker protection.

PART 3 EXECUTION

3.1 PREPARATION FOR FINISH ELEVATIONS AND LINES

A. Contractor shall survey, set, and establish finish earthwork and subgrade elevations in conformance with SSPWC 2-9.4, Line and Grade, and shall conform to the subgrade tolerances specified in SSPWC 301-1.4, Subgrade Tolerances, and as approved by Engineer. [NOTE TO DESIGNER: EDIT ABOVE PARAGRAPH IF PORT WILL PERFORM SURVEY WORK.]

3.2 EXCAVATION

A. [NOTE TO DESIGNER: DESIGNER SHALL COORDINATE WITH ENVIRONMENTAL PLANNING DIVISION DURING 50% DESIGN ON ANY ANTICIPATED NEED FOR DEWATERING. DEWATERING

STRATEGY AND LANGUAGE TO BE INCLUDED IN SPECIFICATIONS SHALL BE EVALUATED BASED ON SPECIFIC PROJECT REQUIREMENTS. DESIGNER SHALL DETERMINE IF BID ITEMS ARE NEEDED FOR THIS WORK, AND ADD IT TO PART 4 IF NECESSSARY. STANDARD LANGUAGE FOLLOWS AS AN OPTION.] Active Dewatering is prohibited.

B. All water including, but not limited to, Groundwater and Storm Water entering excavations, trenches, and below grade structures and appurtenances that is required to be removed in order to perform the Work shall be managed, containerized, tested, characterized, profiled, and disposed by the Contractor as Liquid Waste, per the requirements of this Section, and conform to the applicable environmental protection measures in accordance with local, State, and Federal regulations. Unpermitted discharge of managed water onto the ground or into the ocean, storm drain, or sanitary sewer is prohibited.

C. [NOTE TO DESIGNER: DESIGNER SHALL DETERMINE THE LIKELIHOOD OF THIS CONDITION AND COORDINATE WITH THE ENVIRONMENTAL PLANNING DIVISION DURING 50% DESIGN ON ANY ANTICIPATED NEED FOR DEWATERING. DEWATERING STRATEGY AND LANGUAGE TO BE INCLUDED IN SPECIFICATIONS SHALL BE EVALUATED BASED ON SPECIFIC PROJECT REQUIREMENTS. DESIGNER SHALL DETERMINE IF BID ITEMS ARE NEEDED FOR THIS WORK, AND ADD IT TO PART 4 IF NECESSSARY. STANDARD LANGUAGE FOLLOWS AS AN OPTION.] Ocean water and tidally influenced Groundwater shall likely be encountered during excavation. The Contractor shall schedule Work and use construction means and methods to manage ocean water and/or Groundwater and minimize quantities of ocean water and/or Groundwater generated during construction.

D. Earthwork shall be carried out to the lines, grades, and typical sections specified herein, and as shown on the Drawings.

E. Contractor shall excavate in a manner and sequence that provides appropriate drainage at all times per the Contractor's SWPPP [OR BMP CHECKLIST].

F. Contractor shall perform excavation in conformance with SSPWC 300-2, Unclassified Excavation.[NOTE TO DESIGNER: DESIGNER SHALL EVALUATE EXCAVATION AND SHORING REQUIREMENTS AND MINIMIZE SOIL VOLUMES TO BE EXCAVATED. SELECT APPROPRIATE PARAGRAPH BELOW AND EDIT ACCORDINGLY.]

G. The Contractor may employ side slope layback methods, vertical cut methods, shoring and bracing methods, and other means necessary to perform excavation. The Contractor shall be responsible for selecting the appropriate method of excavation and backfill. All excavation and backfilling work shall be maintained within the Project Limits where excavation and backfilling work is to occur. Shoring and bracing required for excavations shall conform to the requirements of this Section.

H. Trenches excavated shall be no greater in width than is necessary to permit construction in accordance with the Contract Documents.

I. Excavations up to, and in close proximity to, existing improvements and utilities shall require handwork to locate and identify crossing utilities and to properly excavate in constricted areas. Contractor shall not assume that all Work may be performed by backhoe or similar equipment.

J. [NOTE TO DESIGNER: DESIGNATE WHERE/TYPE OF BARRIERS ON DRAWINGS] The Contractor shall use concrete barriers (K-Rail) and/or fencing to barricade their Work from traffic during all trenching operations as shown on the Drawings. When no active work is being performed for over 24 hours, open trenches and wharf openings not barricaded by K-Rail or fencing shall be covered by steel plates as required in this Section.

K. If the Contractor encounters unidentified Stained or Odorous Material or VOC-Contaminated Soil, Contractor shall stop Work in that work area and notify the Engineer immediately. Contractor shall not resume earthwork in that work area until directed by the Engineer. Contractor shall not collect samples from that work area without Engineer's review of the Contractor's proposed plan for sampling, testing, and segregating such soil. Contractor shall provide the Engineer with a minimum of two (2) Working Days advance notice of scheduled sampling in order for the Engineer to have the opportunity to be present during sampling.

L. At the direction of the Engineer, the Contractor shall excavate, segregate, stockpile, test, characterize, profile, load, haul, and dispose of Soil determined to be geotechnically unsuitable, Stained or Odorous Material, and/or VOC-Contaminated Soil per the requirements of this Section.

M. As required by the Contractor's Removal, Storage, Transportation and Disposal Work Plan, Exclusion Zones shall be established when excavating and stockpiling Soil characterized as Hazardous Waste. Temporary fencing shall be placed around the Exclusion Zones by the Contractor to restrict unauthorized persons from entering the areas. Fencing shall be temporary chain link, minimum six-feet in height, set on freestanding bases secured by sand bags, or equal, for stability and wind resistance, with windscreen installed on the entirety of the fence. Decontamination stations shall be established by the Contractor at each egress point. [NOTE TO DESIGNER: CONFIRM AVAILABLE SPACE WITHIN THE PROJECT LIMITS FOR ESTABLISHING AN EXCLUSION ZONE.]

3.3 SHEETING, SHEETPILING, BRACING, SHORING, OR OTHER SUPPORT SYSTEMS

A. Contractor’s design and construction of all required support systems shall consider Soil, Groundwater, and Existing Utilities and Structures conditions. Work shall be performed in accordance with the Contract Documents and Contractor's staging of work, and shall be installed and removed without damage to Contractor's Work or items to be protected in place. The Contractor shall repair any damage caused by installation and removal of support systems at no additional cost to the City.

B. The subsurface geotechnical data required to design support systems are provided in the Geotechnical Report included in Appendix CC.

C. General Requirements:

1. The Contractor shall provide adequate sheeting, shoring, bracing, or equivalent method for the protection of life and limb and existing facilities, which shall conform to applicable Federal and State safety orders.
2. Before beginning any excavating or trenching of five (5) feet or more in depth, the Contractor shall prepare and submit to the Engineer a detailed plan showing the design of shoring, bracing, or other provisions to be made for protection of workers and existing facilities from the hazard of caving during excavation. The Contractor’s proposed plan shall comply with the standards established by the U.S. Government and State of California Construction Safety Orders and be prepared by a Civil or Structural Engineer registered in the State of California, who shall sign and stamp said drawings.
3. Review of any excavation support system by the Engineer shall not relieve the Contractor of the obligation to comply with Construction Safety Order Standards for the design and construction of such protective work.

D. Design:

1. Contractor shall submit engineering calculations, stamped by a Civil or Structural Engineer registered in the State of California, for the design of the support system as required to support the sides and ends of excavations to prevent soil movement and water intrusion.
2. Contractor is solely responsible for the adequacy and design of the support system.
3. The excavation support system and all components to support the earth pressures, utility loads, equipment, applicable traffic and construction loads, and other surcharge loads, shall be designed in such a manner to allow the safe and expeditious excavation without movement or settlement of the adjacent ground, and shall prevent damage to or movement of adjacent facilities.
4. Each member of the excavation support system shall be designed to support the maximum loads that can occur during excavation. The design load means the maximum load the support member will be designed to carry.
5. The excavation support systems shall be designed for staged removal to conform to excavation and backfill sequence.
6. The excavation support system shall be removed in such a manner to prevent damage to or movement of adjacent facilities. No permanent portion of the excavation support system shall be left in place.

E. Installation and Removal:

1. Contractor shall furnish, place, and maintain such support system, as designed to support the sides and ends of excavations and prevent Soil movement and water intrusion. [NOTE TO DESIGNER: DETERMINE REQUIREMENT TO SEAL EXCAVATION FROM WATER INTRUSION. ADDITIONAL SPECIFICATIONS MAY BE REQUIRED FOR WASTE SLABS AND SOIL MODIFICATION GROUTING.]
2. The bottoms of support system elements shall be carried to a depth below the excavations adequate to prevent lateral and vertical movement of the support system.
3. Sheeting, if used, shall be installed as the excavation progresses and in such a manner as to maintain pressure against the original ground at all times. The sheeting shall be installed vertically with the edges tight together, and all bracing shall be of such design and strength to maintain the sheeting in its proper position.
4. Contractor shall select suitable method to install and remove shoring and sheeting system considering condition of subsurface soil, ground water and existing structures and utilities in the vicinity. Contractor shall submit selected method, equipment details and sequence of installation for review and approval by the Engineer.
5. Contractor shall perform vibration monitoring during shoring installation and removal. Contractor shall submit details of vibration monitoring including but not limited to qualification of vibration monitor personal, equipment details, monitoring locations plan, threshold limits of vibration

established to protect the existing structures, mitigation measure in the event vibration exceeds the threshold limits.

6. In general, all sheeting, sheet piling, bracing, shoring, or other methods used to support the sides of open excavations shall be withdrawn as the excavations are being backfilled and compacted.
7. Contractor shall not remove the support system until the Work has attained the required strength to permit the placing of Backfill Material.

3.4 STOCKPILE CONSTRUCTION

A. Contractor shall establish separate stockpiles for each type of Soil or Waste. Soil or Waste with different characterizations shall be segregated without mixing or comingling with adjacent stockpiles.

B. Contractor shall manage Waste and Soil stockpiles to complete the Work as specified in the Contract Documents. Any and all delays associated with improper management of stockpiles shall be at no additional cost to the City.

C. Contractor shall construct stockpile(s) on a level surface. All stockpile locations proposed by the Contractor shall be reviewed by the Engineer. Each completed stockpile shall be finished to a uniform shape and the top shall be sloped at a minimum grade of two percent (2%) to provide drainage. [NOTE TO DESIGNER: REVISE THIS LAST SENTENCE AS NECESSARY IF STOCKPILE RESTRICTIONS ARE NECESSARY AND PROVIDED, SUCH AS HEIGHT RESTRICTIONS TO REDUCE LOADS OVER UTILITIES, LIMITED AVAILABLE SPACE, ETC.]

D. Contractor shall install fencing around Waste stockpiles. Fencing shall be temporary chain link, minimum six-feet in height, set on freestanding bases secured by sand bags or equal for stability and wind resistance, with windscreen installed on the entirety of the fence. Stockpile fencing shall be labeled to correspond with representative samples submitted for laboratory testing for Soil characterization purposes as presented in this Section.

E. As required by the Contractor's Removal, Storage, Transportation and Disposal Work Plan, Contractor shall provide engineering measures for odor, vapor, and dust control. Contractor shall comply with SCAQMD Rule 402 (odor and nuisance), Rule 403 (fugitive dust), and Rule 1166 (vapors).

F. Contractor shall contain and manage water draining from stockpiles as Liquid Waste.

G. Contractor shall underlay each Waste stockpile with 10-mil plastic sheeting with minimum eighteen (18) inch overlap of individual sheets. Plastic sheeting shall be anchored with sandbags. Any damage to the plastic sheeting shall be repaired within 24 hours at no additional cost to the City. The damaged area shall not be covered before the repair is observed and accepted by the Engineer.

H. Contractor shall cover each stockpile at the end of each day, or when a stockpile has reached the maximum height allowed per the Drawings and as required per the conditions of the Contractor's SWPPP. [NOTE TO DESIGNER: REVISE THIS PARAGRAPH ACCORDINGLY IF THE PROJECT INCLUDES STOCKPILE HEIGHT RESTRICTIONS.]

I. Base Material encountered during excavation shall be removed and stockpiled separately from other Soil without comingling. Stockpiled Base Material to be disposed offsite shall be tested, characterized, profiled, and disposed offsite as a Waste per the requirements of this Section.

J. Contractor shall stockpile Surplus Soil separately from other Waste, which shall be managed within the Project Limits identified on the Drawings. [DESIGNER TO ENSURE STOCKPILES ARE SHOWN ON DRAWINGS WITHIN PROJECT LIMITS OR LAYDOWN AREA] Surplus Soil shall be stockpiled for potential use as Backfill Material within the Project Limits. Unused Surplus Soil shall be tested characterized, profiled, and disposed offsite per the requirements of this Section. [NOTE TO DESIGNER: EVALUATE SURPLUS SOIL QUANTITIES FOR THE PROJECT AND DEFINE WHERE IT IS TO BE USED AS BACKFILL MATERIAL. IF THE PROJECT IS A NET EXPORT, THEN THE DESIGNER MUST SPECIFY THE DISPOSITION OF THE REMAINING SURPLUS SOIL. DESIGNER MUST COORDINATE WITH CONSTRUCTION MANAGEMENT DIVISION TO DETERMINE IF THERE IS ANOTHER PORT SITE TO TAKE THE SURPLUS SOIL. IF THERE IS NO SUCH SITE, DESIGNER MUST SPECIFY OFFSITE DISPOSAL. ALSO NEED TO INCLUDE APPROPRIATE BID ITEMS RELATED TO SURPLUS SOIL AND ITS DISPOSITION].

K. [designer to remove this Article if VOC not anticipated] Contractor shall conduct SCAQMD Rule 1166 air monitoring at the stockpiles. The Contractor shall maintain the stockpiles and provide mitigation measures in accordance with SCAQMD Rule 1166. VOC-Contaminated Soil shall be segregated and stockpiled separately from all other materials by the Contractor. The total quantity of stockpiled VOC-Contaminated Soil shall not exceed the limit stipulated by SCAQMD Rule 1166.

L. Stockpile area(s) shall be managed in accordance with the Contractor's SWPPP.

3.5 EXISTING UNDERGROUND UTILITIES (KNOWN)

A. Locations of utilities shown on Drawings are provided for the Contractor's information only and the Contractor shall be responsible for verifying the location of said utilities.

B. Contractor shall protect known existing utilities, including those shown on the Drawings to remain, and will be held responsible to repair damage resulting from Contractor’s failure to protect these facilities adequately. Damage to known utilities caused by the Contractor shall be repaired or replaced by the Contractor within the same day in accordance with standards of utilities and agencies having jurisdiction, at no additional cost to the City.

C. Contractor shall coordinate all work near utilities with the Engineer and utility owners. Contractor shall cooperate with the Engineer and utility owners in maintaining service.

3.6 EXISTING UNDERGROUND UTILITIES (UNKNOWN)

A. When previously unknown utility lines are encountered within the area of operations, the Contractor shall notify the Engineer. Contractor shall protect the utility lines until the Engineer notifies the Contractor of the required course of action. Protection of utilities shall be per the Contract Documents.

B. Contractor shall not disrupt a service until required action on such lines has been determined by the Engineer.

3.7 EXCAVATION NEAR GAS LINES AND FIBER OPTIC LINES PER GOVERNMENT CODE 4216

A. If an excavation is within the tolerance zone of a gas line or fiber optic line, Contractor shall determine the exact location of the line using hand tools before using any power-driven equipment in the tolerance zone. Contractor shall use reasonable care to prevent damaging gas lines and fiber optic lines.

1. “Tolerance Zone” is defined as 24 inches on each side of the field marking placed by the operator or marking service in one of the following ways:

a. 24 inches from each side of a single marking, assumed to be the centerline of the subsurface installation.

b. 24 inches plus one-half the specified size on each side of a single marking with the size of installation specified.

c. 24 inches from each outside marking that graphically shows the width of the outside surface of the subsurface installation on a horizontal plane.

B. Contractor may use a vacuum extraction device to expose subsurface installations within the tolerance zone if the operator has marked the gas or fiber optic line, the Contractor has contacted the line owner/company whose installations may be in conflict with the excavation, and the operator has agreed to the use of a vacuum excavation device. Contractor shall inform the regional notification center of Contractor’s intent to use a vacuum excavation device when obtaining the ticket.

C. Contractor may use power-operated or boring equipment for the removal of any existing pavement only if there is no known subsurface installation contained in the pavement.

D. Contractor shall presume all subsurface installations to be active, and shall use the same care around subsurface installations that may be inactive as the Contractor would use around active subsurface installations.

3.8 UNAUTHORIZED EXCAVATION

A. Unauthorized excavation consists of removal of Soil beyond limits specified herein and shown on the Drawings.

B. Unauthorized excavations shall be backfilled and compacted at no additional cost to the City as specified for adjacent authorized excavations, unless otherwise directed by Engineer.

3.9 IMPORT AND EXPORT

A. Import Soil shall be brought to the Site in accordance with Contractor’s Import and Export Soil Hauling Plan and the requirements and procedures of this Section.

B. Contractor shall provide truckers with handouts that indicate approved haul routes.

C. [NOTE TO DESIGNER: DETERMINE IF AN ONSITE SCALE IS REQUIRED AND, IF SO, AVAILABLE AREAS FOR LOCATION OF SUCH SCALE. DELETE IF NOT USED] The Contractor shall provide on-site scales and a California-licensed Weighmaster to weigh trucks arriving at or leaving the Site to determine the load weight and provide certified load tickets of all imported or exported material for loads that do not

have certified load tickets. Alternatively, licensed off-site truck scales may be used, provided they conform to the requirements of this Section.

D. The form of “Certificates of Weights and Measures” (load ticket) used shall be subject to approval or change at the beginning of the Contract to conform to the requirements of the City, and the Contractor shall be responsible for the accuracy thereof. The Contractor shall keep all records of gross, tare, and net weights in detail. The load ticket of each truck shall be delivered with each load. Tickets shall identify the origin location of the material. All trucks shall be plainly numbered.

E. All records of gross, tare, and net weights shall be signed by a California Licensed Weighmaster.

F. Contractor’s equipment hauling material to or from the Work Site shall not queue on streets within the City of Long Beach without prior approval of the Engineer.

G. Contractor’s trucks to be loaded at the Work Site shall only access the Work Site through the designated ingress and egress in accordance with the Contract Documents.

H. Full-time flagperson shall be provided by the Contractor at the Work Site gates in accordance with the Contract Documents and as approved by the Engineer. [NOTE TO DESIGNER: CONFIRM THE NEED FOR FULL OR PART-TIME FLAGPERSON.]

I. Contractor’s truck traffic shall be included in the Traffic Control Plan submitted to the Engineer to minimize traffic impacts[EDIT AS NEEDED], at the Work Site gate, and on surrounding surface streets, and reduce dust generation during import and hauling work.

3.10 SUBGRADE PREPARATION

A. Contractor shall prepare subgrade in conformance with SSPWC Section 301-1.2, Preparation of Subgrade, except that prior to placing base material, the Contractor shall over-excavate and replace, or scarify and recompact the subgrade per the requirements of the Geotechnical Design Report – LA-04 Pump Station Relocation and Storm drain Realignment in Appendix CC, unless otherwise noted in the Contract Documents or approved in writing by the Engineer. The contractor shall grade subgrade to lines and elevations indicated on the Drawings.[NOTE TO DESIGNER: EDIT DEPTH OF SCARIFICATION AND COMPACTION PER GEOTECHNICAL RECOMMENDATION.]

B. The proposed foundations intended for the Project’s pump station can be supported directly on the improved ground. See the Geotechnical Design Report – LA-04 Pump Station Relocation and Storm Drain Realignment in Appendix CC for details.

C. Contractor shall notify the Engineer in writing three (3) Working Days in advance of performing any work for the subgrade preparation.

D. Contractor shall notify the Engineer two (2) Working Days in advance for subgrade observation and acceptance by the Engineer. Contractor shall not place any utility, structure or pavement, including bedding or base, on subgrade without the Engineer's prior acceptance of subgrade.

E. Contractor shall not operate equipment supported directly on the subgrade unless the equipment selected can be supported without softening of the subgrade, as accepted by the Engineer.

F. Contractor shall not place Bedding or Backfill Material on surfaces that are unstable or "pumping" as determined by the Engineer. If the Engineer determines that Contractor’s methods are inappropriate to prepare the subgrade or the Engineer determines an unstable or “pumping” surface exists, then subgrade stabilization measures will be as determined and directed by the Engineer. [NOTE TO DESIGNER: ONLY INCLUDE THE FOLLOWING SENTENCES IF SUBGRADE STABILIZATION IS EXPECTED AND INCLUDED IN THE PROJECT SCOPE OF WORK, WHICH MEANS INCLUDING IN APPLICABLE BID ITEMS. OTHERWISE, DELETE AS STABILIZATION WILL BE CHANGED CONDITIONS. CONFIRM METHOD OF STABILIZATION WITH GEOTECH.]

1. Soft or pumping subgrades shall be stabilized by over-excavating the subgrade up to twenty-four (24) inches, and placing and compacting 3/4-inch crushed rock in the over-excavated area.
2. Soft or pumping subgrades within utility trenches could be alternatively stabilized by over-excavating the subgrade twelve (12) inches, and placing one-sack concrete slurry in the over-excavated area.

3.11 BEDDING

A. Contractor shall place Bedding Material in conformance with SSPWC Section 306-1.2.1, and the requirements shown in the Contract Documents.

B. Jetting of Bedding shall not be allowed, unless approved by the Engineer.

3.12 BACKFILLING

A. Prior to placement of Backfill Material, Contractor shall remove all organic matter, rocks greater than three (3) inches in any dimension, trash, steel, wood, concrete, asphalt concrete, and other unsatisfactory material from placement area.

B. Contractor shall place Backfill Material as Work permits, but not until completion of the following:

1. Acceptance by the Engineer of Work below finish grade.
2. Inspection by any third party utility owner of their utility. [NOTE TO DESIGNER: REVISE PER SPECIFIC REQUIREMENTS OF THIRD PARTY OWNERS.]
3. As-built survey by the City and recording of as-built survey on the Project Record Documents by Contractor of final location (Northing and Easting coordinates and elevation), and limits of any excavation, structure, utility, and other underground feature, new and existing, that will be covered by Backfill Material, including as applicable, all utility terminations, utility appurtenances, water line valves and fittings, and changes in grade for utility lines. [NOTE TO DESIGNER: CONFIRM WHETHER PORT OR CONTRACTOR IS RESPONSIBLE FOR SURVEY, REVISE THIS PARAGRAPH ACCORDINGLY AND CHECK FOR CONSISTENCY WITH SURVEY TS SECTION AND SC-21.]
4. Removal of concrete formwork, trash, and debris.

C. Contractor shall remove shoring and bracing as appropriate to facilitate placement of Backfill Material but shall maintain safe and stable excavations at all times.

D. Placement of Backfill Material by the Contractor shall be in conformance with SSPWC Sections 306-1.3.1 and 306-1.3.2, and the requirements shown in the Contract Documents.

E. Unless otherwise specified, Contractor shall place Backfill Material in horizontal layers not exceeding eight (8) inches in loose thickness prior to compaction. The Engineer will perform compaction testing in conformance with this Section.

F. Contractor shall not begin backfill and compaction of trenches containing utilities encased in concrete until a minimum of twenty-four (24) hours after placing the concrete encasement and observation by the Engineer.

3.13 STRUCTURE BACKFILL AROUND STRUCTURES

A. Structure Backfill Material shall not be placed until the structure has been observed by the Engineer and accepted for backfilling.

B. No Structure Backfill Material shall be placed against a structure until the concrete has developed not less than the 28-day compressive strength.

C. Structure Backfill Material shall be placed in horizontal layers not exceeding eight (8) inches in loose thickness prior to compaction. [NOTE TO DESIGNER: CONFIRM LAYER THICKNESS REQUIREMENTS FOR PROJECT.]

3.14 COMPACTION AND DENSITY CONTROL

A. Contractor shall properly compact excavation subgrades and Backfill Material to achieve the following requirements, and correct any deficiencies resulting from insufficient and improper compaction of such materials at no additional cost to the City:

1. Ninety percent (90%) of Modified Proctor Dry Density (ASTM D1557) for all excavation subgrades.
2. In areas under pavement and structures, ninety-five percent (95%) of Modified Proctor Dry Density (ASTM D1557) for Backfill Material.
3. Ninety-five percent (95%) of Modified Proctor Dry Density (ASTM D1557) for Structure Backfill Material placed within five (5) feet of structures.
4. In areas not specified, ninety percent (90%) of Modified Proctor Dry Density (ASTM D1557) for Backfill Material.
5. The minimum moisture content for sandy soils used as Backfill Material shall be maintained at the optimum moisture content in accordance with ASTM D1557.
6. The minimum moisture content for clayey soils used as Backfill Material shall be maintained at optimum plus two percent (2%) in accordance with ASTM D1557.

B. The Engineer will perform density testing to certify that compaction meets the requirements of this Section. When tests are performed, acceptable results shall indicate that the compaction and density requirements specified in this Section have been obtained.

C. The Engineer will perform density testing on each layer of Bedding and Backfill Material prior to placing succeeding layers. The number of tests performed shall be a minimum of one (1) for every two hundred (200) cubic yards of compacted material, with a minimum of one (1) test for every one (1) foot thickness of compacted material. Testing frequency shall be in accordance with ASTM methods, unless otherwise specified in this Section. The Engineer reserves the right to perform compaction tests in any location at any time. Retests of failed tests will be performed by the Engineer and costs for each retest may be deducted from the final payment to the Contractor. The Contractor shall provide space and allow time for each test to be performed and the results obtained.

D. Contractor shall furnish assistance to facilitate density testing by the Engineer.

E. The following tests may be used by the Engineer for on-site density control:

1. ASTM D1556 – Standard Test Method for Density and Unit Weight of Soil In-Place by the Sand Cone Method.
2. ASTM D6938, - Standard Test Method for In-Place Density and Water Content of Soil and Soil Aggregate by Nuclear Methods (Shallow Depth).

F. Whenever the Contractor's operations do not conform to the above criteria and requirements contained in this Section, the Engineer will prohibit placement of an overlying lift until the Contractor takes effective corrective action at no additional cost to the City, including, but not limited to, scarification, manipulation of moisture, and re-compaction. Any delays resulting from the Contractor’s corrective actions shall be at no additional cost to the City.

G. Damage to any compacted lift at any time during the course of construction, such as rutting under loads imposed by earth moving equipment, shall be fully repaired and re-compacted to specified density at no additional cost to the City prior to placement of any overlying materials. Any delays resulting from the Contractor’s corrective actions shall be at no additional cost to the City.

3.15 MOISTURE CONTROL

A. Backfill Material may require addition of moisture, or may contain excess moisture in its natural state or may take on excess moisture during handling and stockpiling. The Contractor shall process material to attain specified moisture content, prior to compaction, at no additional cost to the City.

B. Where Backfill Material is to be moisture conditioned before compaction, the Contractor shall uniformly apply potable water to surface of layer of placed Backfill Material and mix uniformly in such a manner as to prevent free water from appearing on surface during and subsequent to compaction operations.

C. The Contractor shall remove and replace, or scarify and stir dry, Backfill Material that is too wet to permit compaction to specified density. Drying of Backfill Material shall be at no additional cost to the City. Any delays resulting from the Contractor’s corrective actions shall be at no additional cost to the City.

D. Material that is too wet to permit compaction may be temporarily stockpiled on-site within the Project Limits, spread, and allowed to dry. The Contractor shall assist drying by using one or a combination of methods including discing, harrowing, and pulverizing, until moisture content is reduced to a satisfactory value, as determined by moisture-density testing. Any moisture conditioning required shall be at no additional cost to the City.

3.16 WORKING ADJACENT TO EXISTING STRUCTURES

A. The Contractor shall use caution when working adjacent to existing structures to assure they are not damaged. Damage to existing structures shall be repaired within 24 hours at no additional cost to the City.

3.17 PAVEMENT RESTORATION

A. Pavement restoration shall be in accordance with the Contract Documents, Section 32 11 00, “Base Courses”, and Section 32 12 16, “Asphalt Paving”.

3.18 SOIL AND WASTE CHARACTERIZATION

A. Contractor shall characterize the Soil and Waste stockpiles to determine disposition per the requirements of this Section.

B. Under the supervision of the Contractor’s Licensed Environmental Professional, the Contractor shall collect representative Soil samples from stockpiled Soil in accordance with the frequency provided below. These sampling frequencies shall apply to the total Soil volume for each individual stockpile of each Soil, VOC-Contaminated Soil, or Stained or Odorous Material. Samples shall be collected per the requirements specified herein.

1. For each stockpile with a total volume of 500 cubic yards or less, the Contractor shall collect three (3) primary samples.
2. For each stockpile with a total volume greater than 500 cubic yards, the Contractor shall collect three (3) primary samples for the first 500 cubic yards and one (1) primary sample for each 1000 cubic yards thereafter.

C. Under the supervision of the Contractor's Licensed Environmental Professional, the Contractor shall collect a minimum of one (1) representative Liquid Waste sample from each container without a floating phase. For each container of Liquid Waste that exhibits a floating phase, the Contractor shall collect a minimum of one (1) representative Liquid Waste sample from the floating phase and one (1) representative Liquid Waste sample from the underlying Liquid Waste.

D. Each Soil sample submitted for testing shall be collected at approximately three (3) feet below the surface of stockpile or at the mid-point of stockpile height, whichever is less. Each sample shall be collected at a randomly selected point on the stockpile surface in accordance with USEPA's "Test Methods for Evaluating Solid Waste - Physical/Chemical Methods" (SW-846; most recent version). Composite soil sampling shall be prohibited. For VOCs and TPH in the gasoline range analysis, the Soil samples collected shall be sub-sampled in the field in accordance with USEPA Method 5035 and submitted separately for analysis.

E. For quality control purposes, duplicate Soil samples shall also be collected and analyzed at a frequency of ten percent (10%) of the number of primary samples identified in this Section. Duplicate Soil samples shall be represented by collection of an additional sample immediately below one of the primary samples and analyzed by the same USEPA methods conducted for the primary samples. For VOCs and TPH in the gasoline range analysis, a subsample of the Soil immediately below the primary sample shall be collected in accordance with USEPA Method 5035 and analyzed. The number of duplicate Soil samples shall be rounded up to the next whole number; a minimum of one (1) duplicate sample is required. For VOC analysis, trip blanks shall be analyzed for each sampling event.

F. Contractor's Soil and Liquid Waste sampling and handling procedures shall be in accordance with USEPA's "Test Methods for Evaluating Solid Waste - Physical/Chemical Methods" (SW-846; most recent version). Soil and Liquid Waste samples shall be transferred to laboratory-quality sample containers and preserved in accordance with SW-846. Each Waste sample shall be recorded and transported using an approved chain-of-custody form.

G. Contractor shall sample and test stockpiled Soil within three (3) Working Days of the completion of Soil excavation of each Waste characterization or when a stockpile reaches its maximum size or height, per the requirements of this Section. [NOTE TO DESIGNER: THE 3 WORKING DAY REQUIREMENT FOR SAMPLING SHALL NOT CHANGE.]

H. Contractor shall request laboratory turn-around time sufficient to meet its contractual schedule; however, in no case shall the turn-around-time exceed seven (7) calendar days. If required to meet the Project schedule milestones, Contractor shall expedite laboratory analysis at no additional cost to the City. Any and all delays associated with Contractor's laboratory testing shall be at no additional cost to the City. [NOTE TO DESIGNER: DETERMINE IF 7 CALENDAR DAYS IS AN APPROPRIATE DURATION FOR COMPLETION OF TESTING, BASED ON WHAT THE PROJECT CONSTRUCTION SCHEDULE CAN ACCOMMODATE.]

I. Laboratory analysis of each Soil sample shall be performed by the Contractor's environmental testing laboratory per the requirements of this Section and in accordance with the table below:

Analysis Type	Method Number
TPH as carbon chain	USEPA Method 8015M/5035. [For TPH analysis with carbon-range distinction, a portion of the sample shall be preserved using USEPA Method 5035 to be analyzed for the gasoline-range fraction]
VOCs	USEPA Method 8260B/5035
PCBs	USEPA Method 8082
PAHs	USEPA Method 8310
OCPs	USEPA Method 8081A
California Code of Regulations, Title 22 Metals (17 metals)	USEPA Method 6010B/7470A

Note: If reported TTLC for an analyte exceeds ten times (10x) the regulatory maximum for the enforceable California STLC and/or twenty times (20x) the regulatory maximum for the enforceable Federal soluble concentration per TCLP, the appropriate leachability test(s) shall be conducted by the Contractor at no additional cost to the City.

J. Laboratory analysis of each Liquid Waste sample shall be performed by the Contractor's environmental testing laboratory per the requirements of this Section and in accordance with the table below:

Analysis Type	Method Number
TPH as carbon chain	USEPA Method 8015M
VOCs	USEPA Method 8260B
PCBs	USEPA Method 8082
California Code of Regulations, Title 22 Metals (17 metals)	USEPA Method 6010B/7470A

3.19 WASTE DISPOSITION

A. The preliminary disposal Waste characterizations for offsite disposal of Waste, per the Contract Documents, are as follows: [NOTE TO DESIGNER: IT IS THE RESPONSIBILITY OF THE DESIGNER TO EVALUATE THE SOIL INVESTIGATION DATA AND DETERMINE THE CHARACTERIZATIONS THAT APPLY TO THE SOIL TO BE GENERATED BY THE PROJECT AND TO RESEARCH AND IDENTIFY DISPOSAL FACILITIES THAT WILL ACCEPT THE WASTE.]

1. Non-Hazardous Waste.
2. Non-RCRA California-Hazardous Waste. [NOTE TO DESIGNER: THIS CATEGORY OF WASTE MAY NEED TO BE SPLIT INTO MULTIPLE ITEMS FOR SPECIFIC TYPES OF WASTE, FOR EXAMPLE A SPECIFIC METAL, VOC, SVOC, OR PAH.]

B. Contractor shall identify offsite disposal facilities from the list presented in this Section for final disposition of all Waste identified in this Section. The Engineer shall have approval authority for the final disposition of Waste. As part of the approval process, the Contractor shall submit completed Waste Profile applications and sample manifests from the disposal facilities to the Engineer for review and approval by the Engineer within no more than fourteen (14) calendar days from submittal of the Waste Characterization Report. Contractor shall submit copy(ies) of the Profile approval(s) from the Contractor's selected disposal facility(ies).

C. The Engineer shall obtain California Hazardous Waste ID Numbers from the California Department of Toxic Substances Control and provide the ID Numbers to the Contractor for lawful waste management when transporting and disposing of Non-RCRA, California Hazardous Waste. California Hazardous Waste ID Numbers are not needed for transport and disposal of Non-Hazardous Waste. Contractor shall comply with Cal/EPA requirements of Hazardous Waste generation, temporary onsite storage, transportation, and disposal. [NOTE TO DESIGNER: THIS PARAGRAPH ONLY REQUIRED IF PROJECT INCLUDES DISPOSAL OF NON-RCRA CALIFORNIA-HAZARDOUS WASTE.]

D. The Engineer shall obtain USEPA ID numbers and provide the ID Numbers to the Contractor for lawful waste management when transporting and disposing of TSCA-Hazardous Waste. USEPA ID Numbers are not needed for disposal of Non-Hazardous Waste or Non-RCRA, California-Hazardous Waste. Contractor shall comply with USEPA requirements of Hazardous Waste generation, temporary on-site storage, transportation, and disposal. [NOTE TO DESIGNER: THIS PARAGRAPH ONLY REQUIRED IF PROJECT INCLUDES DISPOSAL OF RCRA- OR TSCA-HAZARDOUS WASTE.]

E. Contractor shall provide sufficient numbers of Waste manifests for the transport of all Waste to the offsite facility(ies). The Engineer will obtain the authorized signatures on the manifests provided by the Contractor and will retain all copies of the manifests until the Contractor is authorized to dispose of the Waste. Contractor shall obtain signed manifests from the Engineer for each load prior to the load being transported offsite. The City shall not be responsible for additional costs incurred should the Contractor fail to provide sufficient manifest forms for all Waste to be transported and disposed of offsite.

F. All Hazardous Waste shall be properly managed, manifested and transported using a Hazardous Waste hauler registered by the Cal/EPA Department of Toxic Substances Control to a proper waste management facility. Hazardous Waste hauler registrations shall be submitted to the Engineer for review a minimum of seven (7) calendar days prior to hauling. [NOTE TO DESIGNER: THIS PARAGRAPH ONLY REQUIRED IF PROJECT INCLUDES DISPOSAL OF NON-RCRA CALIFORNIA-, RCRA- OR TSCA-HAZARDOUS WASTE.]

G. After approval of a Waste profile by the Contractor's recycling or disposal facility, if random sampling of the Waste stream by the facility upon delivery indicates that the Waste exceeds the approved Profile, the Contractor shall immediately notify the Engineer.

H. Contractor shall transport and dispose of Waste to specified and approved, licensed offsite disposal facilities within no more than ten (10) Calendar Days of Profile Approval. [NOTE TO DESIGNER: DETERMINE IF 10 CALENDAR DAYS IS AN APPROPRIATE DURATION FOR WASTE REMOVAL, BASED ON WHAT THE PROJECT CONSTRUCTION SCHEDULE CAN ACCOMMODATE. IN NO CASE SHOULD THE DURATION BE GREATER THAN 30 DAYS.]

I. Contractor shall affix labels to all Waste containers (including drums, roll-off bins, and tanks). Contractor shall provide durable water-resistant labels with sufficient print size to be clearly legible, with bold print on a contrasting background, displaying the following:

CAUTION: CONTAINS (Type of Non-Hazardous or Hazardous Waste)
DATE: _____ SOURCE: _____
Contractor Name: _____ Phone No.: _____
USEPA ID No.: _____(if applicable)_____
California ID No.: _____(if applicable)_____

3.20 WASTE DISPOSAL FACILITIES

A. Contractor shall transport and dispose of Waste to specified and approved, licensed offsite disposal facilities for final disposition per the Contract Documents.

B. For each Waste category, prior to bidding, Contractor shall confirm that one or more of the facilities that the Contractor is selecting from the approved Landfills and Recycling Facilities listed below, are capable, willing, and able to accept the Waste. Furthermore, at the time of disposal, the Contractor's proposed disposal facilities, from the approved Landfills and Recycling Facilities listed below, shall be fully licensed and permitted at the time of use and not subject to regulatory investigation or undergoing review for renewal of its license. Waste characteristics and circumstances at the time of disposal may dictate acceptance of the Waste at any specific facility and, in the case of rejection at any one facility, Contractor shall be responsible for arranging for disposal of the Waste at one or more of the remaining facilities at no additional cost to the City.

C. The table below presents approved offsite facilities for lawful recycling and/or disposal of Soil characterized as Non-Hazardous Waste. Should the proposed facility or facilities be found to be unacceptable to the Engineer at the Engineer's exclusive discretion, an alternate facility or facilities from the table below shall be submitted for acceptance as a substitute at no additional cost to the City. Should Contractor wish to propose a facility not listed herein, Contractor shall submit Waste Profile applications for one or more licensed facilities that accept Soil characterized as Non-Hazardous Waste for review and approval by the Engineer.

Landfills Recycling Facilities for Soil Characterized as Non Hazardous Waste
Simi Valley Landfill and Recycling Center 2801 Madera Road, Simi Valley, California 93065 (805) 522-7023
Soil Safe of CA 12328 Hibiscus Avenue, Adelanto, California 92301 (800) 862-8001

D. [NOTE TO DESIGNER: INCLUDE ONLY IF DISPOSAL OF NON-RCRA CALIFORNIA-HAZARDOUS WASTE IS PART OF THE PROJECT] Contractor shall submit Waste profile applications for one or more licensed facilities that accept Soil characterized as Non-RCRA, California Hazardous Waste for review and approval by the Engineer. The table below presents approved offsite facilities for lawful recycling and/or disposal of soil characterized as Non-RCRA California-Hazardous Waste. Should the proposed facility or facilities be found to be unacceptable to the Engineer at the Engineer's exclusive discretion, an alternate facility or facilities from the table below shall be submitted for acceptance as a substitute at no additional cost to the City.

Landfills Recycling Facilities for Soil Characterized as Non-RCRA California Hazardous Waste

Yuma Environmental Services, YES Inc. 2730 E. 13th Street, Yuma, AZ 85365
Chemical Waste Management 35251 Old Skyline Road, Kettleman City, CA 93239 (559) 386-9711

E. [NOTE TO DESIGNER: THIS PARAGRAPH SHOULD ALWAYS BE INCLUDED TO ADDRESS INCIDENTAL LIQUID WASTE; HOWEVER, DETERMINE IF PROJECT ALSO INCLUDES IDENTIFIED QUANTITIES OF LIQUID WASTE.] Contractor shall submit Waste profile applications for one or more licensed facilities that accept Liquid Waste characterized as Non-Hazardous Waste or Hazardous Waste [NOTE TO DESIGNER: DETERMINE IF LIQUID WASTE WILL BE NON-HAZARDOUS OR HAZARDOUS WASTE, OR BOTH.] for review and approval by the Engineer. The table below presents approved offsite facilities for lawful recycling and/or disposal of Liquid Waste characterized as Non-Hazardous Waste or Hazardous Waste. Should the proposed facility or facilities be unacceptable to the Engineer at the Engineer's exclusive discretion, an alternate facility or facilities from the table below shall be submitted for acceptance as a substitute at no additional cost to the City.

Recycling/Disposal Facilities for Liquid Waste Characterized as Non-Hazardous Waste or Hazardous Waste
Crosby & Overton, Inc. 1610 W 17th Street, Long Beach, California 90813 (562) 432-5445

3.21 TRUCK LOADING AND HAULING FOR OFFSITE DISPOSAL OF WASTE

A. While Waste is being loaded into trucks at the point of loading, the Contractor shall perform vapor, odor, and dust suppression in accordance with this Section and SCAQMD Rule 1166. After the Waste is loaded into the transport trucks, the Waste shall be covered and otherwise contained to prevent Waste from blowing or spilling out of the truck during transport to the Contractor's selected disposal facilities for final disposition.

B. Prior to leaving the loadout area, all vehicles shall be decontaminated per the following conditions:
   1. All truck exteriors shall be broom cleaned after loading.
   2. The dump truck or roll-off bin portion of the truck shall be covered with a tarp to prevent Waste and/or dust from spilling out of the truck during transport to the Contractor's selected facilities for final disposition.
   3. For transportation of Hazardous Waste, the Contractor shall use an on-site wheel washing facility to remove loose Waste and/or dust from the underside and wheels of each truck and trailer. Wheel wash water shall be containerized, tested, profiled, and disposed of at an offsite facility as a Liquid Waste per the requirements of this Section. The wheel washing facility shall be specified in the Contractor's Removal, Storage, Transportation, and Disposal Work Plan Submittal.

C. Prior to leaving the loadout areas, each truck shall be inspected by the Contractor to ensure that the payloads are adequately covered, the trucks are cleaned of spilled material, and the shipment is ready for transport. The Contractor shall obtain a signed manifest from the Engineer for each load prior to the load being transported offsite. Proper Hazardous Waste placarding shall be required for transportation of Hazardous Waste.

D. The Contractor shall notify the Engineer a minimum of three (3) Working Days prior to truck loading and hauling so that the Engineer can be present during such operations.

3.22 WASTE DOCUMENTATION

A. Contractor shall track on Non-Hazardous Waste Manifests, the movement from Project Site to approved offsite disposal facilities for final disposition of Waste characterized as Non-Hazardous Waste.

B. Contractor shall track on Hazardous Waste Manifests, the movement from Project Site to approved offsite disposal facilities for final disposition of Waste characterized as Non-RCRA California-Hazardous Waste, RCRA-Hazardous Waste, or TSCA-Hazardous Waste. [NOTE TO DESIGNER: DETERMINE WHICH

WASTE CHARACTERIZATION SHOULD BE INCLUDED. THIS PARAGRAPH IS NOT REQUIRED IF PROJECT DOES NOT INCLUDE HAZARDOUS WASTE.]

C. Before offloading its payload, the truck shall be weighed by the disposal facility operator. Contractor shall provide manifests and certified load or weight tickets or bills of lading to the Engineer within 24 hours after the Waste has been transported offsite.

PART 4 MEASUREMENT AND PAYMENT

4.1 MEASUREMENT FOR “SHORING FOR EXCAVATIONS” WILL BE ON A PERCENTAGE OF THE LUMP SUM BID FOR THIS ITEM AT THE DISCRETION OF THE ENGINEER IN ACCORDANCE WITH GENERAL CONDITIONS GC-9.1.3. PAYMENT SHALL INCLUDE ENGINEERED-STAMPED SYSTEM, AND FURNISHING ALL TRANSPORTATION, LABOR, MATERIALS, EQUIPMENT, INCIDENTALS AND TESTING NECESSARY FOR DESIGNING, FURNISHING, PLACING, MAINTAINING, MOVING, AND REMOVING EXCAVATION SHEETING, SHORING, BRACING OR OTHER REQUIRED METHODS TO PROVIDE ADEQUATE WORKER PROTECTION FROM THE HAZARD OF CAVING GROUND DURING DEMOLITION AND PROTECT ADJACENT PROPERTY, CONSTRUCTION AND INSTALLATION WORK REQUIRING EXCAVATION AND TRENCH EXCAVATION, AS SPECIFIED AND SHOWN.

A. Measurement for “Disposal of Non-Hazardous Waste” will be by the Ton based on certified load tickets. One Ton equals 2,000 pounds. Payment for “Disposal of Non-Hazardous Waste” will be as stated in the Schedule of Bid Items, and shall constitute full compensation to furnish all transportation, labor, materials, equipment, and incidentals necessary for profiling, loading, hauling, and disposing Waste, as specified and shown. Measurement and payment for this bid item will not include Liquid Waste.

B. Measurement for “Disposal of Non-RCRA California-Hazardous Waste” will be by the Ton based on certified load tickets. One Ton equals 2,000 pounds. Payment for “Disposal of Non-RCRA California-Hazardous Waste” will be as stated in the Schedule of Bid Items, and shall constitute full compensation to furnish all transportation, labor, materials, equipment, and incidentals necessary for profiling, loading, hauling, and disposing Waste, as specified and shown. Measurement and payment for this bid item will not include Liquid Waste. [NOTE TO DESIGNER: THIS CATEGORY OF WASTE MAY NEED TO BE SPLIT INTO MULTIPLE BID ITEMS FOR SPECIFIC TYPES OF WASTE, FOR EXAMPLE A SPECIFIC METAL, VOC, SVOC, OR PAH.]

C. Measurement for “Earthwork” will be on a percentage of the Lump Sum (LS) bid for this item at the discretion of the Engineer in accordance with General Conditions GC-9.1.3. “Earthwork” includes soil excavation, subgrade preparation, backfill, and grading. Payment shall constitute full compensation to furnish all transportation, labor, materials, equipment, and incidentals necessary for excavating, trenching, segregation, stockpiling, sampling, testing, and characterizing excavated Soil, as specified and shown.

D. Measurement for “Liquid Waste Handling and Disposal” will be by the Gallon (GAL) based on certified load tickets or disposal facility records. Payment for “Liquid Waste Handling and Disposal” will be as stated in the Schedule of Bid Items, and shall constitute full compensation to furnish all transportation, labor, materials, equipment, and incidentals necessary for removing, containerizing, sampling, testing, characterizing, profiling, loading, hauling, and disposing Liquid Waste, as specified and shown. [NOTE TO DESIGNER: DETERMINE IF PROJECT INCLUDES DISPOSAL OF SPECIFICALLY IDENTIFIED LIQUID WASTE, OR IF THE ONLY LIQUID WASTE HANDLING AND DISPOSAL IS GROUNDWATER THAT IS INCIDENTAL TO THE WORK. IF INCIDENTAL, NO SEPARATE BID ITEM IS REQUIRED AND THE DISPOSAL OF SUCH LIQUID WASTE SHALL BE INCIDENTAL TO OTHER BID ITEMS. FOLLOWING ARE MEASUREMENT EXAMPLES FOR SPECIFICALLY IDENTIFIED LIQUID WASTE.]

E. Excavation, trenching, stockpiling, testing, backfill, compaction, and crushed rock associated with Storm Drainage Systems shall be included in the measurement and payment as described in Technical Specifications Section 33 40 00, “Storm Drainage Utilities”.

F. Excavation, trenching, stockpiling, testing, backfill, compaction, associated with Demolition shall be included in the measurement and payment as described in Technical Specifications Section 02 41 00, “Demolition”.

G. Excavation, trenching, stockpiling, testing, backfill, and compaction associated with Electrical Systems shall be included in the measurement and payment as described in Technical Specifications Section 26 05 00, “Common Work Results for Electrical”.

H. No separate measurement and payment will be made for any other work covered by this Section. The cost of any other work shall be considered incidental.

END OF SECTION

SECTION 311000 - SITE CLEARING

PART 1 GENERAL

1.1 SUMMARY

A. Section Includes:
   1. Protecting existing vegetation to remain.
   2. Removing existing vegetation.
   3. Clearing and grubbing.
   4. Stripping and stockpiling topsoil.
   5. Stripping and stockpiling rock.
   6. Removing above- and below-grade site improvements.
   7. Disconnecting, capping or sealing, and removing site utilities.
   8. Temporary erosion and sedimentation control.

B. Related Requirements:
   1. Section 015000 "Temporary Facilities and Controls" for temporary erosion- and sedimentation-control measures.

1.2 DEFINITIONS

A. Subsoil: Soil beneath the level of subgrade; soil beneath the topsoil layers of a naturally occurring soil profile, typified by less than 1 percent organic matter and few soil organisms.

B. Surface Soil: Soil that is present at the top layer of the existing soil profile. In undisturbed areas, surface soil is typically called "topsoil," but in disturbed areas such as urban environments, the surface soil can be subsoil.

C. Topsoil: Top layer of the soil profile consisting of existing native surface topsoil or existing in-place surface soil; the zone where plant roots grow. Its appearance is generally friable, pervious, and black or a darker shade of brown, gray, or red than underlying subsoil; reasonably free of subsoil, clay lumps, gravel, and other objects larger than 2 inches in diameter; and free of weeds, roots, toxic materials, or other nonsoil materials.

D. Vegetation: Trees, shrubs, groundcovers, grass, and other plants.

1.3 MATERIAL OWNERSHIP

A. Except for materials indicated to be stockpiled or otherwise remain Owner's property, cleared materials shall become Contractor's property and shall be removed from Project site.

1.4 INFORMATIONAL SUBMITTALS

A. Existing Conditions: Documentation of existing trees and plantings, adjoining construction, and site improvements that establishes preconstruction conditions that might be misconstrued as damage caused by site clearing.
   1. Use sufficiently detailed photographs or video recordings.

B. Record Drawings: Identifying and accurately showing locations of capped utilities and other subsurface structural, electrical, and mechanical conditions.

1.5 FIELD CONDITIONS

A. Traffic: Minimize interference with adjoining roads, streets, walks, and other adjacent occupied or used facilities during site-clearing operations.
   1. Do not close or obstruct streets, walks, or other adjacent occupied or used facilities without permission from Owner and authorities having jurisdiction.
   2. Provide alternate routes around closed or obstructed trafficways if required by Owner or authorities having jurisdiction.

B. Utility Locator Service: Notify utility locator service for area where Project is located before site clearing.

PART 2 PRODUCTS (NOT USED)

PART 3 EXECUTION

3.1 TEMPORARY EROSION AND SEDIMENTATION CONTROL

A. Provide temporary erosion- and sedimentation-control measures to prevent soil erosion and discharge of soil-bearing water runoff or airborne dust to adjacent properties and walkways, according to erosion- and sedimentation-control Drawings and requirements of authorities having jurisdiction.

B. Inspect, maintain, and repair erosion- and sedimentation-control measures during construction until permanent vegetation has been established.

C. Remove erosion and sedimentation controls, and restore and stabilize areas disturbed during removal.

3.2 EXISTING UTILITIES

A. Locate, identify, disconnect, and seal or cap utilities indicated to be removed or abandoned in place.

1. Owner will arrange to shut off indicated utilities when requested by Contractor.

B. Locate, identify, and disconnect utilities indicated to be abandoned in place.

C. Interrupting Existing Utilities: Do not interrupt utilities serving facilities occupied by Owner or others, unless permitted under the following conditions and then only after arranging to provide temporary utility services according to requirements indicated:

1. Do not proceed with utility interruptions without Architect's written permission.

D. Excavate for and remove underground utilities indicated to be removed.

3.3 SITE IMPROVEMENTS

A. Remove existing above- and below-grade improvements as indicated and necessary to facilitate new construction.

B. Remove slabs, paving, curbs, gutters, and aggregate base as indicated.

1. Unless existing full-depth joints coincide with line of demolition, neatly saw-cut along line of existing pavement to remain before removing adjacent existing pavement. Saw-cut faces vertically.

3.4 DISPOSAL OF SURPLUS AND WASTE MATERIALS

A. Remove surplus soil material, unsuitable topsoil, obstructions, demolished materials, and waste materials including trash and debris, and legally dispose of them off Owner's property.

END OF SECTION 311000

SECTION 312000 - EARTH MOVING

PART1 GENERAL

1.1 SUMMARY

A. Section Includes:
   1. Geotextiles.
   2. Controlled low-strength material.
   3. Geofoam.
   4. Warning tape.
B. Related Requirements:
   1. Section 013200 "Construction Progress Documentation", Section 013233 "Photographic Documentation" for recording preexcavation and earth-moving progress.
   2. Section 311000 "Site Clearing" for site stripping, grubbing, stripping topsoil, and removal of above- and below-grade improvements and utilities.
   3. Section 315000 "Excavation Support and Protection" for shoring, bracing, and sheet piling of excavations.
   4. Section 316329 "Drilled Concrete Piers and Shafts" for excavation of shafts and disposal of surplus excavated material.
   5. Section 329200 "Turf and Grasses" for finish grading in turf and grass areas, including preparing and placing planting soil for turf areas.
   6. Section 329300 "Plants" for finish grading in planting areas and tree and shrub pit excavation and planting.

1.2 UNIT PRICES

A. Work of this Section is affected by unit prices for earth moving specified in Section 012200 "Unit Prices."
B. Quantity allowances for earth moving are included in Section 012100 "Allowances."

1.3 DEFINITIONS

A. Backfill: Soil material or controlled low-strength material used to fill an excavation.
   1. Initial Backfill: Backfill placed beside and over pipe in a trench, including haunches to support sides of pipe.
   2. Final Backfill: Backfill placed over initial backfill to fill a trench.
B. Base Course: Aggregate layer placed between the subbase course and hot-mix asphalt paving.
C. Bedding Course: Aggregate layer placed over the excavated subgrade in a trench before laying pipe.
D. Borrow Soil: Satisfactory soil imported from off-site for use as fill or backfill.
E. Excavation: Removal of material encountered above subgrade elevations and to lines and dimensions indicated.
   1. Authorized Additional Excavation: Excavation below subgrade elevations or beyond indicated lines and dimensions as directed by Architect. Authorized additional excavation and replacement material will be paid for according to Contract provisions for unit prices.Unauthorized Excavation: Excavation below subgrade elevations or beyond indicated lines and dimensions without direction by Architect. Unauthorized excavation, as well as remedial work directed by Architect, will be without additional compensation.
F. Fill: Soil materials used to raise existing grades.

1.4 QUALITY ASSURANCE

A. Geotechnical Testing Agency Qualifications: Qualified according to ASTM E329 and ASTM D3740 for testing indicated.

1.5 FIELD CONDITIONS

A. Traffic: Minimize interference with adjoining roads, streets, walks, and other adjacent occupied or used facilities during earth-moving operations.
   1. Do not close or obstruct streets, walks, or other adjacent occupied or used facilities without permission from Owner and authorities having jurisdiction.
   2. Provide alternate routes around closed or obstructed traffic ways if required by Owner or authorities having jurisdiction.

PART 2 PRODUCTS

2.1 SOIL MATERIALS

A. Satisfactory Soils: Soil Classification Groups GW, GP, GM, SW, SP, and SM according to ASTM D2487, or a combination of these groups; free of rock or gravel larger than 3 inches in any dimension, debris, waste, frozen materials, vegetation, and other deleterious matter.
B. Subbase Material: Naturally or artificially graded mixture of natural or crushed gravel, crushed stone, and natural or crushed sand; ASTM D2940/D2940M; with at least 90 percent passing a 1-1/2-inch sieve and not more than 12 percent passing a No. 200 sieve.
C. Base Course: Naturally or artificially graded mixture of natural or crushed gravel, crushed stone, and natural or crushed sand; ASTM D2940/D2940M; with at least 95 percent passing a 1-1/2-inch sieve and not more than 8 percent passing a No. 200 sieve.
D. Engineered Fill: Naturally or artificially graded mixture of natural or crushed gravel, crushed stone, and natural or crushed sand; ASTM D2940/D2940M; with at least 90 percent passing a 1-1/2-inch sieve and not more than 12 percent passing a No. 200 sieve.
E. Bedding Course: Naturally or artificially graded mixture of natural or crushed gravel, crushed stone, and natural or crushed sand; ASTM D2940/D2940M; except with 100 percent passing a 1-inch sieve and not more than 8 percent passing a No. 200 sieve.
F. Drainage Course: Narrowly graded mixture of [washed] crushed stone, or crushed or uncrushed gravel; ASTM D448; coarse-aggregate grading Size 57; with 100 percent passing a 1-1/2-inch sieve and zero to 5 percent passing a No. 8 sieve.
G. Filter Material: Narrowly graded mixture of natural or crushed gravel, or crushed stone and natural sand; ASTM D448; coarse-aggregate grading Size 67; with 100 percent passing a 1-inch sieve and zero to 5 percent passing a No. 4 sieve.
H. Sand: ASTM C33/C33M; fine aggregate.
I. Impervious Fill: Clayey gravel and sand mixture capable of compacting to a dense state.

2.2 ACCESSORIES

A. Warning Tape: Acid- and alkali-resistant, polyethylene film warning tape manufactured for marking and identifying underground utilities, 6 inches wide and 4 mils thick, continuously inscribed with a description of the utility; colored as follows:
   1. Red: Electric.
   2. Yellow: Gas, oil, steam, and dangerous materials.
   3. Orange: Telephone and other communications.
   4. Blue: Water systems.
   5. Green: Sewer systems.

PART 3 EXECUTION

3.1 PREPARATION

A. Protect structures, utilities, sidewalks, pavements, and other facilities from damage caused by settlement, lateral movement, undermining, washout, and other hazards created by earth-moving operations.
B. Protect and maintain erosion and sedimentation controls during earth-moving operations.

C. Protect subgrades and foundation soils from freezing temperatures and frost. Remove temporary protection before placing subsequent materials.

3.2 EXPLOSIVES

A. Explosives:
   1. Do not use explosives.

3.3 EXCAVATION, GENERAL

A. Classified Excavation: Excavate to subgrade elevations. Material to be excavated will be classified as earth and rock. Do not excavate rock until it has been classified and cross sectioned by Architect. The Contract Sum will be adjusted for rock excavation according to unit prices included in the Contract Documents. Changes in the Contract Time may be authorized for rock excavation.
   1. Earth excavation includes excavating pavements and obstructions visible on surface; underground structures, utilities, and other items indicated to be removed; and soil, boulders, and other materials not classified as rock or unauthorized excavation.
      a. Intermittent drilling; blasting, if permitted; ram hammering; or ripping of material not classified as rock excavation is earth excavation.
   2. Rock excavation includes removal and disposal of rock. Remove rock to lines and subgrade elevations indicated to permit installation of permanent construction without exceeding the following dimensions:

3.4 EXCAVATION FOR WALKS AND PAVEMENTS

A. Excavate surfaces under walks and pavements to indicated lines, cross sections, elevations, and subgrades.

3.5 EXCAVATION FOR UTILITY TRENCHES

A. Excavate trenches to indicated gradients, lines, depths, and elevations.
   1. Beyond building perimeter, excavate trenches to allow installation of top of pipe below frost line.
B. Excavate trenches to uniform widths to provide the following clearance on each side of pipe or conduit. Excavate trench walls vertically from trench bottom to 12 inches higher than top of pipe or conduit unless otherwise indicated.
C. Trench Bottoms:
   1. Excavate and shape trench bottoms to provide uniform bearing and support of pipes and conduit. Shape subgrade to provide continuous support for bells, joints, and barrels of pipes and for joints, fittings, and bodies of conduits. Remove projecting stones and sharp objects along trench subgrade.
      a. For pipes and conduit less than 6 inches in nominal diameter, hand-excavate trench bottoms and support pipe and conduit on an undisturbed subgrade.
      b. For flat-bottomed, multiple-duct conduit units, hand-excavate trench bottoms and support conduit on an undisturbed subgrade.
      c. Excavate trenches 6 inches deeper than elevation required in rock or other unyielding bearing material to allow for bedding course.
   2. Excavate trenches 4 inches deeper than bottom of pipe and conduit elevations to allow for bedding course. Hand-excavate deeper for bells of pipe.
      a. Excavate trenches 6 inches deeper than elevation required in rock or other unyielding bearing material to allow for bedding course.

3.6 SUBGRADE INSPECTION

A. Notify Architect when excavations have reached required subgrade.
B. If Architect determines that unsatisfactory soil is present, continue excavation and replace with compacted backfill or fill material as directed.

3.7 UNAUTHORIZED EXCAVATION

A. Fill unauthorized excavation under foundations or wall footings by extending bottom elevation of concrete foundation or footing to excavation bottom, without altering top elevation. Lean concrete fill, with 28-day compressive strength of 2500 psi, may be used when approved by Architect.
   1. Fill unauthorized excavations under other construction, pipe, or conduit as directed by Architect.

3.8 STORAGE OF SOIL MATERIALS

A. Stockpile borrow soil materials and excavated satisfactory soil materials without intermixing. Place, grade, and shape stockpiles to drain surface water. Cover to prevent windblown dust.

3.9 STOCKPILE SOIL MATERIALS AWAY FROM EDGE OF EXCAVATIONS. BACKFILL

A. Place and compact backfill in excavations promptly, but not before completing the following:
   1. Construction below finish grade including, where applicable, subdrainage, dampproofing, waterproofing, and perimeter insulation.
   2. Surveying locations of underground utilities for Record Documents.
   3. Testing and inspecting underground utilities.
   4. Removing concrete formwork.
   5. Removing trash and debris.
   6. Removing temporary shoring, bracing, and sheeting.
   7. Installing permanent or temporary horizontal bracing on horizontally supported walls.
B. Place backfill on subgrades free of mud, frost, snow, or ice.

3.10 UTILITY TRENCH BACKFILL

A. Place backfill on subgrades free of mud, frost, snow, or ice.
B. Place and compact bedding course on trench bottoms and where indicated. Shape bedding course to provide continuous support for bells, joints, and barrels of pipes and for joints, fittings, and bodies of conduits.
C. Trenches under Footings: Backfill trenches excavated under footings and within 18 inches of bottom of footings with satisfactory soil; fill with concrete to elevation of bottom of footings. Concrete is specified in Section 033000 "Cast-in-Place Concrete."
D. Trenches under Roadways: Provide 4-inch-thick, concrete-base slab support for piping or conduit less than 30 inchesbelow surface of roadways. After installing and testing, completely encase piping or conduit in a minimum of 4 inchesof concrete before backfilling or placing roadway subbase course. Concrete is specified in Section 033000 "Cast-in-Place Concrete."
E. Backfill voids with satisfactory soil while removing shoring and bracing.
F. Initial Backfill:
   1. Soil Backfill: Place and compact initial backfill of satisfactory soil, free of particles larger than 1 inch ??? in any dimension, to a height of 12 inches over the pipe or conduit.
      a. Carefully compact initial backfill under pipe haunches and compact evenly up on both sides and along the full length of piping or conduit to avoid damage or displacement of piping or conduit. Coordinate backfilling with utilities testing.
G. Final Backfill:
   1. Soil Backfill: Place and compact final backfill of satisfactory soil to final subgrade elevation.
H. Warning Tape: Install warning tape directly above utilities, 12 inches below finished grade, except 6 inches below subgrade under pavements and slabs.

3.11 SOIL FILL

A. Plow, scarify, bench, or break up sloped surfaces steeper than 1 vertical to 4 horizontal so fill material will bond with existing material.
B. Place and compact fill material in layers to required elevations as follows:
   1. Under walks and pavements, use satisfactory soil material.
   2. Under steps and ramps, use engineered fill.
   3. Under building slabs, use engineered fill.

4. Under footings and foundations, use engineered fill.

C. Place soil fill on subgrades free of mud, frost, snow, or ice.

3.12 SOIL MOISTURE CONTROL

A. Uniformly moisten or aerate subgrade and each subsequent fill or backfill soil layer before compaction to within 2 percent of optimum moisture content.

1. Do not place backfill or fill soil material on surfaces that are muddy, frozen, or contain frost or ice.
2. Remove and replace, or scarify and air dry, otherwise satisfactory soil material that exceeds optimum moisture content by 2 percent and is too wet to compact to specified dry unit weight.

3.13 SUBBASE AND BASE COURSES UNDER PAVEMENTS AND WALKS

A. Place subbase course and base course on subgrades free of mud, frost, snow, or ice.

B. On prepared subgrade, place subbase course and base course under pavements and walks as follows:

3.14 PROTECTION

A. Protecting Graded Areas: Protect newly graded areas from traffic, freezing, and erosion. Keep free of trash and debris.

B. Repair and reestablish grades to specified tolerances where completed or partially completed surfaces become eroded, rutted, settled, or where they lose compaction due to subsequent construction operations or weather conditions.

1. Scarify or remove and replace soil material to depth as directed by Architect; reshape and recompact.

C. Where settling occurs before Project correction period elapses, remove finished surfacing, backfill with additional soil material, compact, and reconstruct surfacing.

1. Restore appearance, quality, and condition of finished surfacing to match adjacent work, and eliminate evidence of restoration to greatest extent possible.

3.15 DISPOSAL OF SURPLUS AND WASTE MATERIALS

A. Remove surplus satisfactory soil and waste materials, including unsatisfactory soil, trash, and debris, and legally dispose of them off Owner's property.

END OF SECTION 312000

SECTION 316329 - DRILLED CONCRETE PIERS AND SHAFTS

PART 1 - GENERAL

1.1 SECTION INCLUDES

A. Method Test Shaft
B. Load Test
C. Excavation
D. Installation of Concrete Reinforcement
E. Concrete Placement
F. Withdrawal of Temporary Steel Casing
G. Field Quality Control

1.2 MEASUREMENT AND PAYMENT

A. General: Measurement and payment for drilled shaft foundations will be either by the lump-sum method or by the unit-price method as determined by the listing of the bid item for drilled shaft foundations indicated in the Bid Schedule of the Bid Form.
B. Lump Sum: If the Bid Schedule indicates a lump sum for drilled shaft foundations, the lump-sum method of measurement and payment will be in accordance with Section 01 20 00, Price and Payment Procedures, Article 1.03, and will include reinforcing steel.
C. Unit Price: If the Bid Schedule indicates a unit price for drilled shaft foundations, the unit- price method of measurement and payment will be as follows:
    1. Measurement:
        a. Concrete for drilled shaft foundations, of each diameter, including test shaft foundations, will be measured for payment by the linear foot of shaft depth, measured from the cut-off line to the bottom of the shaft.
        b. Reinforcing steel will be measured separately for payment as specified in Section 03 20 00, Concrete Reinforcing.
        c. Drilling of shafts (excavation), including drilling of method test shafts, will be measured for payment as individual units (each), per each shaft drilled and accepted.
        d. Load testing of drilled shaft foundations, both compressive and tension load tests, lateral load tests and ultrasonic crosshole testing, will be measured for payment per each load test performed.
        e. Groundwater control, exploratory drilling, support of excavation for shaft foundations, and steel casing, whether withdrawn or left in place, will not be measured separately for payment; and all costs in connection therewith will be considered incidental to and included with the construction of drilled shaft foundations.
    2. Payment: Drilled shaft foundations will be paid for at the indicated Contract unit prices for the computed quantities as determined by the measurement method specified in Article 1.02.C.1.

1.3 DEFINITIONS

A. The words and terms used in these Specifications conform to the definitions given in ACI 336.1.
B. The terms “drilled shaft” and “cast in drilled hole (CIDH) piles” are used interchangeably.

1.4 REFERENCES

A. International Association of Foundation Drilling (formerly Association of Drilled Shaft Contractors) (ADSC):
    1. ADSC Standards and Specifications for the Foundation Drilling Industry.
B. American Concrete Institute (ACI):
    1. ACI 336.1 Specification for the Construction of Drilled Piers
C. American Society for Testing and Materials (ASTM):
    1. ASTM D1143/D1143M Standard Test Methods for Deep Foundations Under
        a. Static Axial Compressive Load

2. ASTM D3689/D3689M Standard Test Methods for Deep Foundations Under
   a. Static Axial Tensile Load
3. ASTM D3966/D3966M Standard Test Methods for Deep Foundations Under
   a. Lateral Loads
4. ASTM D6760 Standard Test Method for Integrity Testing of Concrete
   a. Deep Foundations by Ultrasonic Crosshole Testing.

1.5 SUBMITTALS

A. General: Refer to Section 01 33 00, Submittal Procedures, and Section 01 33 23, Shop Drawings, Product Data, and Samples, for submittal requirements and procedures.

B. Concrete Reinforcement: Provide submittals in accordance with the requirements of Section 03 20 00, Concrete Reinforcing.

C. Qualifications of Welders and Welding Procedures: Provide submittals in accordance with requirements of Section 03 20 00, Concrete Reinforcing, for reinforcing steel, and with requirements of Section 05 05 22, Metal Welding, for casing steel.

D. Portland Cement Concrete: Provide submittals in accordance with the requirements of Section 03 05 15, Portland Cement Concrete. Include submittal for tremie concrete equipment and placement method.

E. Drilling Equipment: Submit description of equipment including but not limited to power rating, torque, downward thrust, and type and size of drilling tools to be used.

F. Records and Reports: Submit daily reports and shaft record reports or logs as required by ADSC's “Standards and Specifications for the Foundation Drilling Industry,” using ADSC formats for forms.

1.6 QUALITY ASSURANCE

A. Construction Standards: Drilled shaft foundations shall be constructed in accordance with applicable requirements of ACI 336.1 and ADSC's “Standards and Specifications for the Foundation Drilling Industry.”

B. Design Criteria:
   1. Drilled shaft foundations shall consist of monolithically cast-in-place concrete piles of the sizes indicated.
   2. Shaft foundations shall be straight cylindrical shaft type as indicated.
   3. Shaft foundations shall extend from the indicated concrete cutoff elevation to the indicated tip elevation.

C. Tolerances:
   1. Maximum variation of the center of any shaft foundation from the required location: 3 inches, measured at the ground surface.
   2. Bottom Diameter: minus zero, plus 6 inches, measured in any direction.
   3. Maximum variation from plumb: 1 (horizontal):40 (vertical).
   4. Maximum bottom level tolerance: plus or minus 2 inches.

D. Inspection of Shaft Excavations:
   1. The Contractor shall provide equipment for checking the dimensions and alignment of each shaft excavation. Dimensions and alignment shall be determined jointly by the Contractor and the Engineer. Final shaft depths shall be measured with an appropriate weighted tape measure or other approved method after final cleaning.
   2. A minimum of 50 percent of the base of each shaft shall have less than 1/2 inch of sediment at the time of placement of concrete. Maximum depth of sediment or debris at any place on the base of the shaft shall not exceed 1-1/2 inches. Shaft cleanliness will be determined by the Engineer by visual inspection.

1.7 SEQUENCING AND SCHEDULING

A. Unless otherwise permitted by the Engineer, the Contractor shall schedule drilling or excavating, installation of reinforcing steel and concrete placement so that each excavated shaft is poured the same day that the drilling is performed.

B. Do not permit vibration or excessive wheel loads within the immediate vicinity of any shaft excavation until placement of concrete is complete. Maintain excavation stability at all times.

PART 2 - PRODUCTS

2.1 MATERIALS

A. Concrete Reinforcement: Conform to applicable requirements of Section 03 20 00, Concrete Reinforcing, of grades and sizes indicated.

B. Concrete: Conform to applicable requirements of Section 03 30 00, Cast-in-Place Concrete, and Section 03 05 15, Portland Cement Concrete. Provide class of concrete indicated on the Contract Drawings. Where class of concrete is not indicated, provide Class 3000 concrete.

1. Prepare separate mix designs for each class of concrete.
2. Slump for concrete: Slump shall be 5 inches plus or minus 1 inch for dry shafts without temporary casing, and 7 inches plus or minus 1 inch for dry shafts with temporary casing.

C. Steel Casing:

1. Where earth wall of drilled shaft is unstable or has a tendency to slough, crumble, or fall away, provide temporary steel casing to stabilize the shaft wall.
2. Inside diameter of the casing shall be the full diameter of the drilled shaft foundation as indicated, plus or minus 1/2 inch.
3. Steel casing shall have adequate strength to withstand the pressure of concrete placement without distortion.
4. Inside surfaces of steel casing shall be smooth and coated to facilitate easy lifting and removal during placement of concrete.

2.2 EXCAVATING AND DRILLING EQUIPMENT

A. Excavating and drilling equipment shall have adequate capacity, including power, torque, and down thrust to excavate a hole of the maximum diameter and to a depth of 20 percent beyond the depth indicated. Excavation and overreaming tools shall be of adequate design, size, and strength to perform the work indicated.

B. When the material encountered cannot be drilled using conventional earth augers or overreaming tools, special drilling equipment shall be provided, including rock core barrels, rock tools, air tools, and other equipment as necessary to construct the shaft excavation to the size and depth indicated.

PART 3 - EXECUTION

3.1 METHOD TEST SHAFTS

A. The Contractor shall demonstrate the adequacy of the methods and equipment to be employed for excavating shafts by successfully constructing method test shafts. The number of test shafts shall be as indicated in the Contract Specifications or the Contract Drawings. The method test shafts shall include drilling, reinforcing steel, thread bars, and concrete placement.

B. Method test shafts shall be positioned away from the drilled shafts in the location indicated or where approved by the Engineer in writing. Method test shafts shall be drilled to the maximum depth of any drilled shaft indicated.

C. Method test shafts shall be located near existing subsurface exploration data (i.e. a boring or CPT) where the depth of exploration extends to at least to the proposed tip elevation.

D. Failure to demonstrate the adequacy of methods and equipment shall be sufficient reason for the Engineer to require alterations in equipment and methods by the Contractor to eliminate unsatisfactory results.

E. Once approval has been given to construct drilled shafts, no change will be permitted in the methods or equipment used to construct the satisfactory method test shaft without the written approval of the Engineer.

3.2 LOAD TESTS

A. Requirements:

1. The Contractor shall perform compression load tests, tension load tests, and lateral load tests as required to determine whether or not the shafts can carry and withstand the imposed loads. Tests

shall be performed on the method test shafts. Except for shafts required for testing, additional shaft construction will not be permitted until the load tests are completed.

2. Load test requirements shall be as indicated in the Contract Specifications or Contract Drawings.
3. The Contractor shall provide all equipment and apparatus as required to conduct the tests.
4. The Contractor shall install, remove, relocate, and reinstall weights and components as necessary to perform and complete the tests.
5. Tests can be conducted as soon as practicable after the concrete in each drilled shaft has attained the specified 28-day compressive strength, but not until at least 10 days have elapsed after placing the concrete.

B. Compression Load Tests: Tests shall be performed in accordance with ASTM D1143/D1143M. Method of load test shall follow “Quick Load Test Method for Individual Piles” as specified in ASTM D1143/D1134M, Section 5.6. The maximum test load shall be at least 2.5 times the design load as prescribed by the Engineer. Apply the load in increments equal to 10 percent of the maximum test load, with a constant time interval between increments of 5 minutes. Maintain the maximum test load for not less than 15 minutes, unless the shaft has failed as determined by the Engineer. Remove the test load in increments equal to 25 percent of the maximum test load, with a constant time interval between increments of 5 minutes.

C. Tension Load Tests: Tests shall be performed in accordance with ASTM D3689/D3689M. Method of load test shall follow “Quick Load Test Method for Individual Piles” as specified in ASTM D3689/D3689M, Section 7.7. The maximum test load shall be at least twice the design load as prescribed by the Engineer. Apply the load in increments equal to 10 percent of the maximum test load, with a constant time interval between increments of 5 minutes. Maintain the maximum test load for not less than 15 minutes, unless the shaft has failed as determined by the Engineer. Remove the test load in increments equal to 25 percent of the maximum test load, with a constant time interval between increments of 5 minutes.

D. Lateral Load Tests: Tests shall be performed in accordance with ASTM D3966/D3966M. Method of load test shall follow “Standard Loading Procedures” as specified in ASTM D3966/D3966M, Section 6.1.

1. Drilled shafts and CIDH piers/piles capacity to resist wind loading. Applies the lateral load until the test shaft/pier/piles displaces 0.25 inches horizontally.
2. Drilled shafts and CIDH piers/piles capacity to resist Design Basis Earthquake (DBE). Applies the lateral load until the load-displacement curve first exhibits non- linear/bi-linear (change of slope) displacements from the latest load testing.
   a. The drilled shaft and CIDH pier/piles capacity to resist DBE shall be determined by the structural engineer responsible for the design of the structures in accordance with BART Standard Specifications, Facility Design, Structural, Foundations.
3. Drilled shafts and CIDH piers/piles capacity to resist Maximum Considered Earthquake (MCE) or other Extreme Limit States. Applies the lateral load until load- displacement curve first exhibits zero slope displacement (plateau) from the lateral load testing.
   a. The drilled shafts and CIDH piers/piles capacity to resist MCE shall be determined by the structural engineer responsible for design of the structures in accordance with BART Standard Specifications, Facility Design, Structural, Foundations.
4. For drilled shafts and CIDH piers/piles supporting building structures, the lateral pile load capacity shall be determined and verified with the lateral load testing specified in Chapter 18 of CBC, Section 1810, Deep Foundations.

3.3 EXCAVATION

A. General:

1. Excavate for shaft foundations by drilling or by other methods, as approved by method test shafts, to advance the excavation to the required bottom elevation as indicated on the Contract Drawings or as directed by the Engineer. Avoid over excavation. Excavation shall be performed through whatever materials are encountered to the dimensions, depths, and tolerances indicated. Bottoms of excavations shall be level and flat.
2. When required by the Engineer, drill and core an exploratory hole, approximately 3 to 4 inches in diameter, to a depth of 15 feet below the excavation invert and backfill with grout.
3. Protect excavated walls with temporary steel casing as necessary to prevent cave-ins, displacement of the surrounding earth, water incursion, injury to personnel, and damage from construction operations. Maintain indicated neat lines of excavation for cased areas.
4. Make bottom surfaces level within the tolerances specified herein. Remove loose material, debris, and muck with cleaning buckets.

B. Ground Water Control:

1. Notify the Engineer immediately when ground water is encountered.
2. Suitable steel casings shall be furnished and placed when necessary to control water. Drilling mud or chemical stabilizers shall not be used unless permitted by the Engineer.

C. Inspection: After completion of excavation and prior to placement of reinforcing steel, the condition of the excavation will be inspected by the Engineer. Use clean-out buckets or air- lifts to remove any slough or other loose material from the shaft prior to placing reinforcing steel and concrete. An accumulation of soil or rock in the bottom of the excavation will not be permitted.

3.4 INSTALLATION OF CONCRETE REINFORCEMENT

A. Where it is not practicable to deliver the cage assembly to the jobsite as a complete unit ready for installation, make the remaining connections or splices, as indicated on the approved Shop Drawings, at-grade prior to lowering the assembly into the hole.

B. Lower reinforcing steel into the hole in such a manner as to prevent damage to the walls and cause sloughing. Place and tie or clip symmetrically about the axis of the shaft. Use centering devices, securely attached to the cage, to clear the shaft walls and to maintain the cage in place throughout the concrete placement.

C. Set reinforcing steel at required location and elevation prior to concrete placement. Hold and support steel such that it does not move during concrete placement.

D. Check the elevation of top reinforcing steel before and after concrete placement. Make adjustments if steel cage position is not maintained.

E. Check depth of hole using a weighted tape before and after placement of the reinforcing steel. If more than 1 inch to the bottom of the hole is lost, remove cage and remove slough at bottom of hole.

3.5 CONCRETE PLACEMENT

A. Place concrete in dry excavations whenever practicable. Use all practicable means to obtain a dry excavation before and during concrete placement.

B. Concrete shall be placed as soon as possible after reinforcing steel installation. Concrete placement shall be continuous from the bottom to the top elevation of the shaft. Concrete placement shall continue until good quality is evident at the top of the shaft. Concrete shall be placed with a tremie pipe connected to a concrete boom truck.

C. Infiltration of groundwater at or near the bottom of the hole exceeding ¼ inch rise per minute will be considered a wet placement.

D. Wet Concrete Placement
1. Fill hole with water or slurry to the natural water level to equalize the hydraulic head inside and outside the shaft excavation before starting concrete placement. Use only concrete mix designed for tremie placement.
2. Tremie shall be constructed such that it is watertight and will readily discharge concrete. The tremie shall be of sufficient length to permit the discharge end to be immersed in concrete at all times.
3. A plug or similar device shall be used to separate the concrete from the fluid in the hole until pumping begins. Once concrete placement begins, the tip of the tremie pipe shall be maintained to prevent reentry of the slurry into the pipe.
4. Flow of concrete shall be continuous and concrete in tremie shall have sufficient capacity to maintain a positive pressure differential at all times to prevent water or slurry intrusion into the shaft concrete.

3.6 WITHDRAWAL OF TEMPORARY STEEL CASING

A. Where temporary steel casings are used to support the excavation walls, withdraw the casing as the concrete is being placed, unless otherwise indicated or unless the Engineer requires that the casing be permanently grouted in place. Remove the steel casing in such a manner so that the lower edge of the steel liner will always remain a minimum of 5 feet below the surface of the concrete as placed to prevent water from entering the casing from the bottom. Vibrate concrete during withdrawal of the steel casing.

3.7 FIELD QUALITY CONTROL

A. Inspections and Tests: The Contractor shall perform inspections and tests of concrete as specified in Section 03 05 15 - Portland Cement Concrete.

B. For large diameter drilled shafts (3 feet or larger in diameter) and for all drilled shafts or CIDH piles/piers encountering ground water, the Contractor is required to perform ASTM D6760, Ultrasonic Crosshole Testing to confirm the homogeneity and integrity of all of the drilled shafts and CIDH piers/piles. If any of the tested shaft or CIDH pile/pier fails to meet the testing requirements, the Contractor has to remedy the defects and to submit a plan to the Engineer for approval before proceeding, at no additional cost to BART.

C. Records and Reports: Keep a record, on an approved form, for each drilled shaft foundation installed. Record on the form the location, dimensions, elevations of top and bottom, depth of stratum penetration, condition of bottom of excavation, concrete placement data, a continuous record of actual concrete volume placed versus theoretical volume, and any other data called for on the approved report form or pertinent to the foundation.

END OF SECTION 31 63 29

SECTION 321216 - ASPHALT PAVING

PART 1 GENERAL

1.1 SUMMARY

A. Section Includes:
1. Hot-mix asphalt paving.
2. Hot-mix asphalt overlay.
3. Cold milling of existing asphalt pavement.
4. Hot-mix asphalt patching.
5. Asphalt surface treatments.

B. Related Requirements:
1. Section 024116 "Structure Demolition" and Section 024119 "Selective Demolition" for demolition and removal of existing asphalt pavement.
2. Section 312000 "Earth Moving" for subgrade preparation, fill material, separation geotextiles, unbound-aggregate subbase and base courses, and aggregate pavement shoulders.
3. Section 321313 "Concrete Paving" for concrete pavement and for separate concrete curbs, gutters, and driveway aprons.
4. Section 321373 "Concrete Paving Joint Sealants" for joint sealants and fillers at pavement terminations.
5. Section 321400 "Unit Paving" for bituminous setting bed for pavers and for stone and precast concrete curbs.

1.2 ACTION SUBMITTALS

A. Product Data: Include technical data and tested physical and performance properties.
1. Herbicide.
2. Paving geotextile.
3. Joint sealant.

B. Hot-Mix Asphalt Designs:
1. Certification, by authorities having jurisdiction, of approval of each hot-mix asphalt design proposed for the Work.

1.3 INFORMATIONAL SUBMITTALS

A. Qualification Data: For paving-mix manufacturer and testing agency.
1. Material Certificates: Aggregates.
2. Asphalt binder.
3. Asphalt cement.
4. Cutback prime coat.
5. Emulsified asphalt prime coat.
6. Tack coat.
7. Fog seal.
8. Undersealing asphalt.

B. Field quality-control reports.

1.4 QUALITY ASSURANCE

A. Manufacturer Qualifications: A paving-mix manufacturer registered with and approved by authorities having jurisdiction or the DOT of state in which Project is located.

1.5 FIELD CONDITIONS

A. Environmental Limitations: Do not apply asphalt materials if subgrade is wet or excessively damp, if rain is imminent or expected before time required for adequate cure, or if the following conditions are not met:

1. Prime Coat: Minimum surface temperature of 60 deg F.
2. Tack Coat: Minimum surface temperature of 60 deg F.
3. Slurry Coat: Comply with weather limitations in ASTM D3910.
4. Asphalt Base Course: Minimum surface temperature of 40 deg F and rising at time of placement.
5. Asphalt Surface Course: Minimum surface temperature of 60 deg F at time of placement.

PART 2 PRODUCTS

2.1 AGGREGATES

A. General: Use materials and gradations that have performed satisfactorily in previous installations.
B. Coarse Aggregate: ASTM D692/D692M, sound; angular crushed stone, crushed gravel, or cured, crushed blast-furnace slag.
C. Fine Aggregate: ASTM D1073 or AASHTO M 29, sharp-edged natural sand or sand prepared from stone, gravel, cured blast-furnace slag, or combinations thereof.
   1. For hot-mix asphalt, limit natural sand to a maximum of 10 percent by weight of the total aggregate mass.

2.2 ASPHALT MATERIALS

A. Asphalt Binder: ASTM D6373 or AASHTO M 320 binder designation PG 58-28.
B. Hot-Mix Asphalt: Dense-graded, hot-laid, hot-mix asphalt plant mixes approved by authorities having jurisdiction and complying with the following requirements:
   1. Provide mixes with a history of satisfactory performance in geographical area where Project is located.

PART 3 EXECUTION

3.1 EXAMINATION

A. Verify that subgrade is dry and in suitable condition to begin paving.
B. Proceed with paving only after unsatisfactory conditions have been corrected.

3.2 PREPARATION

A. Protection: Provide protective materials, procedures, and worker training to prevent asphalt materials from spilling, coating, or building up on curbs, driveway aprons, manholes, and other surfaces adjacent to the Work.
B. Proof-roll subgrade below pavements with heavy pneumatic-tired equipment to identify soft pockets and areas of excess yielding. Do not proof-roll wet or saturated subgrades.
   1. Proof-roll with a loaded 10-wheel, tandem-axle dump truck weighing not less than 15 tons.
   2. Excavate soft spots, unsatisfactory soils, and areas of excessive pumping or rutting, as determined by Architect, and replace with compacted backfill or fill as directed.

3.3 JOINTS

A. Construct joints to ensure a continuous bond between adjoining paving sections. Construct joints free of depressions, with same texture and smoothness as other sections of hot-mix asphalt course.
   1. Clean contact surfaces and apply tack coat to joints.
   2. Offset longitudinal joints, in successive courses, a minimum of 6 inches.
   3. Offset transverse joints, in successive courses, a minimum of 24 inches.
   4. Construct transverse joints at each point where paver ends a day's work and resumes work at a subsequent time. Construct these joints using either "bulkhead" or "papered" method in accordance with AI MS-22, for both "Ending a Lane" and "Resumption of Paving Operations."
   5. Compact joints as soon as hot-mix asphalt will bear roller weight without excessive displacement.

6. Compact asphalt at joints to a density within 2 percent of specified course density.

3.4 COMPACTION

A. General: Begin compaction as soon as placed hot-mix paving will bear roller weight without excessive displacement. Compact hot-mix paving with hot hand tampers or with vibratory-plate compactors in areas inaccessible to rollers.
   1. Complete compaction before mix temperature cools to 185 deg F.
B. Breakdown Rolling: Complete breakdown or initial rolling immediately after rolling joints and outside edge. Examine surface immediately after breakdown rolling for indicated crown, grade, and smoothness. Correct laydown and rolling operations to comply with requirements.
   1. Intermediate Rolling: Begin intermediate rolling immediately after breakdown rolling while hot-mix asphalt is still hot enough to achieve specified density. Continue rolling until hot-mix asphalt course has been uniformly compacted to the following density:Average Density, Marshall Test Method: 96 percent of reference laboratory density in accordance with ASTM D6927 or AASHTO T 245, but not less than 94 percent or greater than 100 percent.
C. Finish Rolling: Finish roll paved surfaces to remove roller marks while hot-mix asphalt is still warm.
D. Edge Shaping: While surface is being compacted and finished, trim edges of pavement to proper alignment. Bevel edges while asphalt is still hot; compact thoroughly.
E. Repairs: Remove paved areas that are defective or contaminated with foreign materials and replace with fresh, hot-mix asphalt. Compact by rolling to specified density and surface smoothness.
F. Protection: After final rolling, do not permit vehicular traffic on pavement until it has cooled and hardened.
G. Erect barricades to protect paving from traffic until mixture has cooled enough not to become marked.

3.5 INSTALLATION TOLERANCES

A. Pavement Thickness: Compact each course to produce thickness indicated within the following tolerances:
   1. Base Course: Plus or minus 1/2 inch.
   2. Surface Course: Plus 1/4 inch, no minus.
B. Pavement Surface Smoothness: Compact each course to produce surface smoothness within the following tolerances as determined by using a 10-foot straightedge applied transversely or longitudinally to paved areas:
   1. Base Course: 1/4 inch.
   2. Surface Course: 1/8 inch.

3.6 FIELD QUALITY CONTROL

A. Testing Agency: Engage a qualified testing agency to perform tests and inspections.
B. Thickness: In-place compacted thickness of hot-mix asphalt courses will be determined in accordance with ASTM D3549/D3549M.
C. Surface Smoothness: Finished surface of each hot-mix asphalt course will be tested for compliance with smoothness tolerances.

3.7 WASTE HANDLING

A. General: Handle asphalt-paving waste in accordance with approved waste management plan required in Section 017419 "Construction Waste Management and Disposal."

END OF SECTION 321216

SECTION 321313 - CONCRETE PAVING

PART 1 GENERAL

1.1 SUMMARY

A. Section includes concrete paving including the following:
   1. Parking lots.
   2. Curbs and gutters.
   3. Walks.
B. Related Requirements:
   1. Section 033000 "Cast-in-Place Concrete" for general building applications of concrete.
   2. Section 321316 "Decorative Concrete Paving" for stamped concrete other than stamped detectable warnings.
   3. Section 321373 "Concrete Paving Joint Sealants" for joint sealants in expansion and contraction joints within concrete paving and in joints between concrete paving and asphalt paving or adjacent construction.
   4. Section 321713 "Parking Bumpers."
   5. Section 321716 "Manufactured Traffic-Calming Devices."
   6. Section 321723 "Pavement Markings."

1.2 DEFINITIONS

A. Cementitious Materials: Portland cement alone or in combination with one or more of blended hydraulic cement, fly ash, slag cement, and other pozzolans.
B. W/C Ratio: The ratio by weight of water to cementitious materials.

1.3 ACTION SUBMITTALS

A. Product Data: For each type of product.
B. Design Mixtures: For each concrete paving mixture. Include alternate design mixtures when characteristics of materials, Project conditions, weather, test results, or other circumstances warrant adjustments.

1.4 INFORMATIONAL SUBMITTALS

A. Qualification Data: For qualified ready-mix concrete manufacturer and testing agency.
B. Material Certificates: For the following, from manufacturer:
   1. Cementitious materials.
   2. Steel reinforcement and reinforcement accessories.
   3. Fiber reinforcement.
   4. Admixtures.
   5. Curing compounds.
   6. Applied finish materials.
   7. Bonding agent or epoxy adhesive.
   8. Joint fillers.
C. Material Test Reports: For each of the following:
D. AggregatesField quality-control reports.

1.5 QUALITY ASSURANCE

A. Ready-Mix-Concrete Manufacturer Qualifications: A firm experienced in manufacturing ready-mixed concrete products and that complies with ASTM C94/C94M requirements for production facilities and equipment.
   1. Manufacturer certified according to NRMCA's "Certification of Ready Mixed Concrete Production Facilities" (Quality Control Manual - Section 3, "Plant Certification Checklist").
B. Testing Agency Qualifications: Qualified according to ASTM C1077 and ASTM E329 for testing indicated.

1. Personnel conducting field tests must be qualified as ACI Concrete Field Testing Technician, Grade 1, according to ACI CP-1 or an equivalent certification program.

1.6 PRECONSTRUCTION TESTING

A. Preconstruction Testing Service: Engage a qualified independent testing agency to perform preconstruction testing on concrete paving mixtures.

1.7 FIELD CONDITIONS

A. Traffic Control: Maintain access for vehicular and pedestrian traffic as required for other construction activities.
B. Cold-Weather Concrete Placement: Protect concrete work from physical damage or reduced strength that could be caused by frost, freezing, or low temperatures. Comply with ACI 306.1 and the following:
   1. When air temperature has fallen to or is expected to fall below 40 deg F, uniformly heat water and aggregates before mixing to obtain a concrete mixture temperature of not less than 50 deg F and not more than 80 deg F at point of placement.
   2. Do not use frozen materials or materials containing ice or snow.
   3. Do not use calcium chloride, salt, or other materials containing antifreeze agents or chemical accelerators unless otherwise specified and approved in design mixtures.
C. Hot-Weather Concrete Placement: Comply with ACI 301 and as follows when hot-weather conditions exist:
   1. Cool ingredients before mixing to maintain concrete temperature below 90 deg F at time of placement. Chilled mixing water or chopped ice may be used to control temperature, provided water equivalent of ice is calculated in total amount of mixing water. Using liquid nitrogen to cool concrete is Contractor's option.
   2. Cover steel reinforcement with water-soaked burlap, so steel temperature will not exceed ambient air temperature immediately before embedding in concrete.
   3. Fog-spray forms, steel reinforcement, and subgrade just before placing concrete. Keep subgrade moisture uniform without standing water, soft spots, or dry areas.

PART 2 PRODUCTS

2.1 CONCRETE, GENERAL

A. ACI Publications: Comply with ACI 301 unless otherwise indicated.

2.2 FORMS

A. Form Materials: Plywood, metal, metal-framed plywood, or other approved panel-type materials to provide full-depth, continuous, straight, and smooth exposed surfaces.
B. Form-Release Agent: Commercially formulated form-release agent that will not bond with, stain, or adversely affect concrete surfaces and that will not impair subsequent treatments of concrete surfaces.

2.3 STEEL REINFORCEMENT

A. Recycled Content of Steel Products: Postconsumer recycled content plus one-half of preconsumer recycled content not less than 25 percent.
B. Plain-Steel Welded-Wire Reinforcement: ASTM A1064/A1064M, fabricated galvanized- steel wire into flat sheets.
C. Deformed-Steel Welded-Wire Reinforcement: ASTM A1064/A1064M, flat sheet.
D. Epoxy-Coated Welded-Wire Reinforcement: ASTM A884/A884M, Class A, plain steel.
E. Reinforcing Bars: ASTM A615/A615M, Grade 60; deformed.
F. Galvanized Reinforcing Bars: ASTM A767/A767M, Class II zinc coated, hot-dip galvanized after fabrication and bending; with ASTM A615/A615M, Grade 60 deformed bars.
G. Epoxy-Coated Reinforcing Bars: ASTM A775/A775M or ASTM A934/A934M; with ASTM A615/A615M, Grade 60 deformed bars.

H. Steel Bar Mats: ASTM A184/A184M; with ASTM A615/A615M, Grade 60 deformed bars; assembled with clips.

2.4 CONCRETE MATERIALS

1. Portland Cement: ASTM C150/C150M, grayportland cement Type III.

B. Normal-Weight Aggregates: ASTM C33/C33M, Class 4M, uniformly graded. Provide aggregates from a single source with documented service-record data of at least 10 years' satisfactory service in similar paving applications and service conditions using similar aggregates and cementitious materials.

1. Maximum Coarse-Aggregate Size: 3/4 inch nominal.Fine Aggregate: Free of materials with deleterious reactivity to alkali in cement.

C. Joint Fillers: ASTM D1751, asphalt-saturated cellulosic fiber, ASTM D1752, or ASTM D8139, semirigid, closed-cell polypropylene foam] in preformed strips.

D. Slip-Resistive Aggregate Finish: Factory-graded, packaged, rustproof, nonglazing, abrasive aggregate of fused aluminum-oxide granules or crushed emery aggregate containing not less than 50 percent aluminum oxide and not less than 20 percent ferric oxide; unaffected by freezing, moisture, and cleaning materials.

E. Bonding Agent: ASTM C1059/C1059M, Type II, non-redispersible, acrylic emulsion or styrene butadiene.

2.5 CONCRETE MIXTURES

A. Prepare design mixtures, proportioned according to ACI 301, for each type and strength of normal-weight concrete, and as determined by either laboratory trial mixtures or field experience.

1. Use a qualified independent testing agency for preparing and reporting proposed concrete design mixtures for the trial batch method.

PART 3 EXECUTION

3.1 EXAMINATION

A. Examine exposed subgrades and subbase surfaces for compliance with requirements for dimensional, grading, and elevation tolerances.

B. Proof-roll prepared subbase surface below concrete paving to identify soft pockets and areas of excess yielding.

C. Proceed with installation only after unsatisfactory conditions have been corrected.

3.2 PREPARATION

A. Remove loose material from compacted subbase surface immediately before placing concrete.

3.3 EDGE FORMS AND SCREED CONSTRUCTION

A. Set, brace, and secure edge forms, bulkheads, and intermediate screed guides to required lines, grades, and elevations. Install forms to allow continuous progress of work and so forms can remain in place at least 24 hours after concrete placement.

B. Clean forms after each use and coat with form-release agent to ensure separation from concrete without damage.

3.4 JOINTS

A. General: Form construction, isolation, and contraction joints and tool edges true to line, with faces perpendicular to surface plane of concrete. Construct transverse joints at right angles to centerline unless otherwise indicated.

1. When joining existing paving, place transverse joints to align with previously placed joints unless otherwise indicated.

B. Construction Joints: Set construction joints at side and end terminations of paving and at locations where paving operations are stopped for more than one-half hour unless paving terminates at isolation joints.

1. Butt Joints: Use epoxy-bonding adhesive at joint locations where fresh concrete is placed against hardened or partially hardened concrete surfaces.

2. Doweled Joints: Install dowel bars and support assemblies at joints where indicated. Lubricate or coat with asphalt one-half of dowel length to prevent concrete bonding to one side of joint.

C. Isolation Joints: Form isolation joints of preformed joint-filler strips abutting concrete curbs, catch basins, manholes, inlets, structures, other fixed objects, and where indicated.

3.5 CONCRETE PLACEMENT

A. Before placing concrete, inspect and complete formwork and items to be embedded or cast-in.

B. Remove snow, ice, or frost from subbase surface before placing concrete. Do not place concrete on frozen surfaces.

C. Moisten subbase to provide a uniform dampened condition at time concrete is placed. Do not place concrete around manholes or other structures until they are at required finish elevation and alignment.

D. Comply with ACI 301 requirements for measuring, mixing, transporting, and placing concrete.

E. Do not add water to concrete during delivery or at Project site. Do not add water to fresh concrete after testing.

F. Deposit and spread concrete in a continuous operation between transverse joints. Do not push or drag concrete into place or use vibrators to move concrete into place.

G. Consolidate concrete according to ACI 301 by mechanical vibrating equipment supplemented by hand spading, rodding, or tamping.

H. Screed paving surface with a straightedge and strike off.

I. Commence initial floating using bull floats or darbies to impart an open-textured and uniform surface plane before excess moisture or bleedwater appears on the surface. Do not further disturb concrete surfaces before beginning finishing operations or spreading surface treatments.

J. Curbs and Gutters: Use design mixture for automatic machine placement. Produce curbs and gutters to required cross section, lines, grades, finish, and jointing.

K. Slip-Form Paving: Use design mixture for automatic machine placement. Produce paving to required thickness, lines, grades, finish, and jointing.

1. Compact subbase and prepare subgrade of sufficient width to prevent displacement of slip-form paving machine during operations.

3.6 FLOAT FINISHING

A. General: Do not add water to concrete surfaces during finishing operations.

1. Burlap Finish: Drag a seamless strip of damp burlap across float-finished concrete, perpendicular to line of traffic, to provide a uniform, gritty texture.

3.7 CONCRETE PROTECTION AND CURING

A. General: Protect freshly placed concrete from premature drying and excessive cold or hot temperatures.

B. Comply with ACI 306.1 for cold-weather protection.

C. Evaporation Retarder: Apply evaporation retarder to concrete surfaces if hot, dry, or windy conditions cause moisture loss approaching 0.2 lb/sq. ft. x h before and during finishing operations. Apply according to manufacturer's written instructions after placing, screeding, and bull floating or darbying concrete but before float finishing.

D. Begin curing after finishing concrete but not before free water has disappeared from concrete surface.

E. Curing Methods: Cure concrete by moisture curing, moisture-retaining-cover curing, curing compound or a combination of these as follows:

1. Moisture Curing: Keep surfaces continuously moist for not less than seven days with the following materials:

a. Water.

b. Continuous water-fog spray.

3.8 MOISTURE-RETAINING-COVER CURING: COVER CONCRETE SURFACES WITH MOISTURE-RETAINING COVER, PLACED IN WIDEST PRACTICABLE WIDTH, WITH SIDES AND ENDS LAPPED AT LEAST 12 INCHES, AND SEALED BY WATERPROOF TAPE OR ADHESIVE. IMMEDIATELY REPAIR ANY HOLES OR TEARS OCCURRING DURING INSTALLATION OR CURING PERIOD, USING COVER MATERIAL AND WATERPROOF TAPE.PAVING TOLERANCES

A. Comply with tolerances in ACI 117 and as follows:

1. Elevation: 3/4 inch.
2. Thickness: Plus 3/8 inch, minus 1/4 inch.
3. Surface: Gap below 10-feet- long; unleveled straightedge not to exceed 1/2 inch.
4. Alignment of Tie-Bar End Relative to Line Perpendicular to Paving Edge: 1/2 inch per 12 inches of tie bar.
5. Lateral Alignment and Spacing of Dowels: 1 inch.
6. Vertical Alignment of Dowels: 1/4 inch.
7. Alignment of Dowel-Bar End Relative to Line Perpendicular to Paving Edge: 1/4 inch per 12 inches of dowel.
8. Joint Spacing: 3 inches.
9. Contraction Joint Depth: Plus 1/4 inch, no minus.
10. Joint Width: Plus 1/8 inch, no minus.

3.9 FIELD QUALITY CONTROL

A. Testing Agency: Engage a qualified testing agency to perform tests and inspections.
B. Strength of each concrete mixture will be satisfactory if average of any three consecutive compressive-strength tests equals or exceeds specified compressive strength and no compressive-strength test value falls below specified compressive strength by more than 500 psi.
C. Test results to be reported in writing to Architect, concrete manufacturer, and Contractor within 48 hours of testing. Reports of compressive-strength tests to contain Project identification name and number, date of concrete placement, name of concrete testing and inspecting agency, location of concrete batch in Work, design compressive strength at 28 days, concrete mixture proportions and materials, compressive breaking strength, and type of break for both 7- and 28-day tests.
D. Concrete paving will be considered defective if it does not pass tests and inspections.
E. Additional testing and inspecting, at Contractor's expense, will be performed to determine compliance of replaced or additional work with specified requirements.
F. Prepare test and inspection reports.

3.10 REPAIR AND PROTECTION

A. Remove and replace concrete paving that is broken, damaged, or defective or that does not comply with requirements in this Section. Remove work in complete sections from joint to joint unless otherwise approved by Architect.
B. Drill test cores, where directed by Architect, when necessary to determine magnitude of cracks or defective areas. Fill drilled core holes in satisfactory paving areas with portland cement concrete bonded to paving with epoxy adhesive.
C. Protect concrete paving from damage. Exclude traffic from paving for at least 14 days after placement. When construction traffic is permitted, maintain paving as clean as possible by removing surface stains and spillage of materials as they occur.
D. Maintain concrete paving free of stains, discoloration, dirt, and other foreign material. Sweep paving not more than two days before date scheduled for Substantial Completion inspections.

END OF SECTION 321313

SECTION 321373 - CONCRETE PAVING JOINT SEALANTS

PART 1 GENERAL

1.1 SUMMARY

A. Section Includes:
1. Cold-applied joint sealants.
2. Hot-applied joint sealants.
3. Cold-applied, fuel-resistant joint sealants.
4. Hot-applied, fuel-resistant joint sealants.
5. Joint-sealant backer materials.
6. Primers.

B. Related Requirements:
1. Section 079200 "Joint Sealants" for sealing nontraffic and traffic joints in locations not specified in this Section.

1.2 ACTION SUBMITTALS

A. Product Data:
1. Concrete pavement joint sealants.
2. Joint-sealant backer materials.

B. Samples for Initial Selection: Manufacturer's standard color sheets, showing full range of available colors for each type of joint sealant.

C. Paving-Joint-Sealant Schedule: Include the following information:
1. Joint-sealant application, joint location, and designation.
2. Joint-sealant manufacturer and product name.
3. Joint-sealant formulation.
4. Joint-sealant color.

1.3 INFORMATIONAL SUBMITTALS

A. Qualification Statements: For Installer and testing agency.

1.4 QUALITY ASSURANCE

A. Qualifications:
1. Installers: Entity that employs installers and supervisors who are trained and approved by manufacturer.

1.5 PRECONSTRUCTION TESTING

A. Preconstruction Testing: Performed by a qualified testing agency.

1.6 FIELD CONDITIONS

A. Do not proceed with installation of joint sealants under the following conditions:
1. When ambient and substrate temperature conditions are outside limits permitted by joint-sealant manufacturer or are below 40 deg F.
2. When joint substrates are wet.
3. Where joint widths are less than those allowed by joint-sealant manufacturer for applications indicated.
4. Where contaminants capable of interfering with adhesion have not yet been removed from joint substrates.

PART 2 PRODUCTS

2.1 JOINT SEALANTS, GENERAL

A. Compatibility: Provide joint sealants, backer materials, and other related materials that are compatible with one another and with joint substrates under conditions of service and application, as demonstrated by joint-sealant manufacturer, based on testing and field experience.

2.2 JOINT-SEALANT BACKER MATERIALS

A. Joint-Sealant Backer Materials: Nonstaining; compatible with joint substrates, sealants, primers, and other joint fillers; and approved for applications indicated by joint-sealant manufacturer, based on field experience and laboratory testing.

B. Round Backer Rods for Cold- and Hot-Applied Joint Sealants: ASTM D5249, Type 1, of diameter and density required to control sealant depth and prevent bottom-side adhesion of sealant.

C. Round Backer Rods for Cold-Applied Joint Sealants: ASTM D5249, Type 3, of diameter and density required to control joint-sealant depth and prevent bottom-side adhesion of sealant.

2.3 PRIMERS

A. Primers: Product recommended by joint-sealant manufacturer where required for adhesion of sealant to joint substrates indicated.

PART 3 EXECUTION

3.1 EXAMINATION

A. Examine joints to receive joint sealants, with Installer present, for compliance with requirements for joint configuration, installation tolerances, and other conditions affecting joint-sealant performance.

B. Proceed with installation only after unsatisfactory conditions have been corrected.

3.2 PREPARATION

A. Surface Cleaning of Joints: Before installing joint sealants, clean out joints immediately to comply with joint-sealant manufacturer's written instructions.

1. Remove all foreign material from joint substrates that could interfere with adhesion of joint sealant, including dust, old joint sealants, oil, grease, waterproofing, water repellents, water, surface dirt, and frost.

B. Joint Priming: Prime joint substrates where indicated or where recommended in writing by joint-sealant manufacturer, based on preconstruction joint-sealant-substrate tests or prior experience. Apply primer to comply with joint-sealant manufacturer's written instructions. Confine primers to areas of joint-sealant bond; do not allow spillage or migration onto adjoining surfaces.

3.3 INSTALLATION OF JOINT SEALANTS

A. Comply with joint-sealant manufacturer's written installation instructions for products and applications indicated unless more stringent requirements apply.

B. Joint-Sealant Installation Standard: Comply with recommendations in ASTM C1193 for use of joint sealants as applicable to materials, applications, and conditions.

C. Install joint-sealant backers to support joint sealants during application and at position required to produce cross-sectional shapes and depths of installed sealants relative to joint widths that allow optimum sealant movement capability.

1. Do not leave gaps between ends of joint-sealant backer materials.
2. Do not stretch, twist, puncture, or tear joint-sealant backer materials.
3. Remove absorbent joint-sealant backer materials that have become wet before sealant application and replace them with dry materials.

D. Install joint sealants immediately following backer material installation, using proven techniques that comply with the following:

1. Place joint sealants so they fully contact joint substrates.
2. Completely fill recesses in each joint configuration.
3. Produce uniform, cross-sectional shapes and depths relative to joint widths that allow optimum sealant movement capability.

E. Tooling of Nonsag Joint Sealants: Immediately after joint-sealant application and before skinning or curing begins, tool sealants in accordance with the following requirements to form smooth, uniform beads of configuration indicated; to eliminate air pockets; and to ensure contact and adhesion of sealant with sides of joint:
1. Remove excess joint sealant from surfaces adjacent to joints.
2. Use tooling agents that are approved in writing by joint-sealant manufacturer and that do not discolor sealants or adjacent surfaces.

F. Provide joint configuration to comply with joint-sealant manufacturer's written instructions unless otherwise indicated.

3.4 CLEANING AND PROTECTION

A. Clean off excess joint sealant as the Work progresses, by methods and with cleaning materials approved in writing by joint-sealant manufacturers.

B. Protect joint sealants, during and after curing period, from contact with contaminating substances and from damage resulting from construction operations or other causes so sealants are without deterioration or damage at time of Substantial Completion. If, despite such protection, damage or deterioration occurs, cut out and remove damaged or deteriorated joint sealants immediately and replace with joint sealant so installations in repaired areas are indistinguishable from the original work.

END OF SECTION 321373

SECTION 321723 - PAVEMENT MARKINGS

PART 1 GENERAL

1.1 SUMMARY

A. Section Includes:
1. Pavement-marking paint, alkyd.
2. Pavement-marking paint, solvent-borne.
3. Pavement-marking paint, acrylic.
4. Pavement-marking paint, latex.
5. Glass beads.

B. Related Requirements:
1. Section 071800 "Traffic Coatings" for painting whole areas of building floors and pavements with coatings having an integral wearing surface.
2. Section 099113 "Exterior Painting" for painting exterior concrete surfaces other than pavement markings.
3. Section 099123 "Interior Painting" for painting interior concrete surfaces other than pavement markings.

1.2 ACTION SUBMITTALS

A. Product Data: For each type of product.
1. Include technical data and tested physical and performance properties.

B. Shop Drawings:
1. Indicate pavement markings, colors, lane separations, defined parking spaces, and dimensions to adjacent work.
2. Indicate, with international symbol of accessibility, spaces allocated for people with disabilities.

1.3 QUALITY ASSURANCE

A. Regulatory Requirements: Comply with materials, workmanship, and other applicable requirements of Morongo for pavement-marking work.
1. Measurement and payment provisions and safety program submittals included in standard specifications do not apply to this Section.

1.4 FIELD CONDITIONS

A. Environmental Limitations: Proceed with pavement marking only on clean, dry surfaces and at a minimum ambient or surface temperature of 40 deg F for alkyd materials, 55 deg F for water-based materials, and not exceeding 95 deg F.

PART 2 PRODUCTS

2.1 SOURCE LIMITATIONS

A. Obtain pavement-marking paints from single source from single manufacturer.

2.2 PERFORMANCE REQUIREMENTS

A. Accessibility Standard: Comply with applicable provisions the ABA standards of the Federal agency having jurisdiction.

2.3 PAVEMENT MARKINGS

A. Pavement-Marking Paint, Alkyd: MPI #32; alkyd solvent-borne traffic-marking paint, colors complying with FS TT-P-1952F.
   1. Color: As indicated.

PART 3 EXECUTION

3.1 EXAMINATION

A. Verify that pavement-marking substrate is dry and in suitable condition to begin pavement marking in accordance with manufacturer's written instructions.
B. Proceed with pavement marking only after unsatisfactory conditions have been corrected.

3.2 APPLICATION OF PAVEMENT-MARKING PAINT

A. Do not apply pavement-marking paint until layout, colors, and placement have been verified with Architect.
B. Allow asphalt paving or concrete surfaces to age for a minimum of 30 days before starting pavement marking.
C. Sweep and clean surface to eliminate loose material and dust.
D. Apply paint with mechanical equipment to produce pavement markings, of dimensions indicated, with uniform, straight edges. Apply at manufacturer's recommended rates to provide a minimum wet film thickness of 15 mils.

3.3 PROTECTION

A. Protect pavement markings from damage and wear during remainder of construction period.

3.4 CLEANING

A. Clean spillage and soiling from adjacent construction using cleaning agents and procedures recommended by manufacturer of affected construction.

END OF SECTION 321723

SECTION 323113 - CHAIN LINK FENCES AND GATES

PART 1 GENERAL

1.1 SECTION INCLUDES

A. Posts, rails, and frames.
B. Wire fabric.
C. Concrete.
D. Manual gates with related hardware.
E. Accessories.

1.2 REFERENCE STANDARDS

A. ASTM A123/A123M - Standard Specification for Zinc (Hot-Dip Galvanized) Coatings on Iron and Steel Products; 2024.
B. ASTM A153/A153M - Standard Specification for Zinc Coating (Hot-Dip) on Iron and Steel Hardware; 2023.
C. ASTM A392 - Standard Specification for Zinc-Coated Steel Chain-Link Fence Fabric; 2011a (Reapproved 2022).
D. ASTM A817 - Standard Specification for Metallic-Coated Steel Wire for Chain-Link Fence Fabric and Marcelled Tension Wire; 2025.
E. ASTM A1011/A1011M - Standard Specification for Steel, Sheet and Strip, Hot-Rolled, Carbon, Structural, High-Strength Low-Alloy, High-Strength Low-Alloy with Improved Formability, and Ultra-High Strength; 2023.
F. ASTM C94/C94M - Standard Specification for Ready-Mixed Concrete; 2026a.
G. ASTM F567 - Standard Practice for Installation of Chain-Link Fence; 2023.
H. ASTM F1043 - Standard Specification for Strength and Protective Coatings on Steel Industrial Fence Framework; 2018 (Reapproved 2022).
I. ASTM F1083 - Standard Specification for Pipe, Steel, Hot-Dipped Zinc-Coated (Galvanized) Welded, for Fence Structures; 2018 (Reapproved 2022).
J. CLFMI CLF-FIG0111 - Field Inspection Guide; 2014.
K. CLFMI CLF-PM0610 - Product Manual; 2017.
L. CLFMI CLF-SFR0111 - Security Fencing Recommendations; 2014.
M. CLFMI WLG 2445 - Wind Load Guide for the Selection of Line Post and Line Post Spacing; 2023.
N. FS RR-F-191/1D - Fencing, Wire and Post Metal (Chain-Link Fence Fabric); 1990.

1.3 ADMINISTRATIVE REQUIREMENTS

A. Preinstallation Meeting: Convene a preinstallation meeting 1 week before starting work of this section.

1.4 SUBMITTALS

A. See Section 013000 - Administrative Requirements, for submittal procedures.
B. Product Data: Provide data on fabric, posts, accessories, fittings and hardware.
C. Design Calculations: For high wind load areas, provide calculations for fence fabric and accessory selection as well as line post spacing and foundation details. See CLFMI WLG 2445 for line post and spacing guidance.
D. Shop Drawings: Indicate plan layout, spacing of components, post foundation dimensions, hardware anchorage, and schedule of components. See CLFMI CLF-SFR0111 for planning and design recommendations.
    1. Include plans, elevations, sections, gate swing and other required installation and operational clearances, and details of post anchorage and attachment and bracing.
E. Fence Installer Qualification Statement.

1.5 QUALITY ASSURANCE

A. Fence Installer: Company with demonstrated successful experience installing similar projects and products, with not less than 5 years of documented experience.

1.6 FIELD CONDITIONS

A. Field Measurements: Verify layout information for chain-link fences and gates shown on Drawings in relation to property survey and existing structures. Verify dimensions by field measurements.
B. Existing Utilities: Do not interrupt utilities serving facilities occupied by Owner or others unless permitted under the following conditions and then only after arranging to provide temporary utility services according to requirements indicated:
   1. Notify the Architect not less than 7 days in advance of proposed utility interruptions.
   2. Do not proceed with utility interruptions without the architect's written permission.

PART 2 PRODUCTS

2.1 COMPONENTS

A. Source Limitations for Fences and Gates: Obtain each component for each fence and gate type from one source with resources to provide and gates of consistent quality in appearance and physical properties.
B. Line Posts: 6 inch diameter.
C. Corner and Terminal Posts: 6 inch diameter.
D. Gate Posts: 6 inch diameter.
E. Top and Brace Rail: 2 inch diameter, plain end, sleeve coupled.
F. Gate Frame: 2 1/2 inch diameter for welded fabrication.
G. Fabric: 2 inch diamond mesh interwoven wire, 9 gauge, 0.1483 inch thick, top selvage knuckle end closed, bottom selvage knuckle end closed.
H. Tension Wire: 7 gauge, 0.177 inch thick steel, single strand.
I. Easy Twist Tie Wire: 2 ounce galvanized 9 gauge steel wire.

2.2 MATERIALS

A. Posts, Rails, and Frames:
   1. ASTM A1011/A1011M, Designation SS; hot-rolled steel strip, cold formed to pipe configuration, longitudinally welded construction, minimum yield strength of 50 ksi; zinc coating complying with ASTM F1043 and ASTM F1083.
   2. Line Posts: Type II round in accordance with FS RR-F-191/1D.
   3. Terminal, Corner, Top, Intermediate, and Bottom Rails, Brace, and Gate Posts: Type II round in accordance with FS RR-F-191/1D.
   4. Comply with CLFMI CLF-PM0610.
B. Wire Fabric:
   1. ASTM A392 zinc coated steel chain link fabric, Class 2
   2. Comply with CLFMI CLF-PM0610.
C. Concrete:
   1. Ready-mixed, complying with ASTM C94/C94M; normal Portland cement; 2,500 psi strength at 28 days, 3 inch slump.

2.3 MANUAL GATES AND RELATED HARDWARE

A. Cantilever Gates:
   1. Weight Rating: 2,000 lb, maximum.
   2. Roller Assembly: Galvanized steel chassis assembly with permanently-lubricated and sealed roller bearings.
   3. Roller: Graphite impregnated nylon polymer casting, secured to shaft with nylon locknut, UV inhibitors.

4. Mounting to Round Fence Post: U-bolts.

2.4 ACCESSORIES

A. Caps: Cast steel galvanized; sized to post diameter, set screw retainer.
B. Fittings: Sleeves, bands, clips, rail ends, tension bars, fasteners and fittings; galvanized steel.

2.5 FINISHES

A. Components: Galvanized in accordance with ASTM A123/A123M, at 2.0 ounces per square foot.
B. Hardware: Hot-dip galvanized to weight required by ASTM A153/A153M.
C. Accessories: Same finish as framing.

PART 3 EXECUTION

3.1 EXAMINATION

A. Verification of Conditions: Verify that areas are clear of obstructions or debris.

3.2 PREPARATION

A. Removal: Obstructions or debris.

3.3 INSTALLATION

A. Install framework, fabric, accessories and gates in accordance with ASTM F567.
B. Place fabric on outside of intermediate rails.
C. Place fabric center of posts and rails
D. Line Post Footing Depth Below Finish Grade: ASTM F567.
E. Corner, Gate and Terminal Post Footing Depth Below Finish Grade: ASTM F567.
F. Place posts at equal intervals, not to exceed 7 feet.
G. Brace each gate and corner post to adjacent line post with horizontal center brace rail and diagonal truss rods. Install brace rail one bay from end and gate posts.
H. Install center brace rail on corner gate leaves.
I. Fasten fabric to intermediate rail with tie wire at maximum 15 incheson centers. Align twisted end parallel with fence fabric.
J. Attach fabric to end, corner, top rail, bottom rail, and gate posts with tension bars and tension bar clips.
K. Install hardware and gate with fabric to match fence.
L. Install hardware and components to the interior side.
M. Peen all bolts or spot weld upon installation.

3.4 TOLERANCES

A. Maximum Variation From Plumb: 1/4 inch.
B. Maximum Offset From True Position: 1 inch.

3.5 FIELD QUALITY CONTROL

A. See Section 014000 - Quality Requirements, for additional requirements.
B. Layout: Verify that fence installation markings are accurate to design, paying attention to gate locations, underground utilities, and property lines.
C. Post Settings: Randomly inspect three locations against design for:
   1. Hole diameter.
   2. Hole depth.
   3. Hole spacing.

D. Fence Height: Randomly measure fence height at three locations or at areas that appear out of compliance with design.

E. Gates: Inspect for level, plumb, and alignment.

F. Workmanship: Verify neat installation free of defects. See CLFMI CLF-FIG0111 for field inspection guidance.

3.6 CLEANING

A. Clean jobsite of excess materials; scatter excess material from post hole excavations uniformly away from posts. Remove excess material if required.

B. Clean fence with mild household detergent and clean water rinse well.

C. Remove mortar from exposed posts and other fencing material using a 10 percent solution of muriatic acid followed immediately by several rinses with clean water.

END OF SECTION

SECTION 331416 - SITE WATER UTILITY DISTRIBUTION PIPING

PART 1 GENERAL

1.1 SECTION INCLUDES

A. Water pipe for site conveyance lines.
B. Pipe valves.
C. Fire hydrants.

1.2 RELATED REQUIREMENTS

A. Section 033000 - Cast-in-Place Concrete: Concrete for thrust restraints.
B. Section 099113 - Exterior Painting.

1.3 REFERENCE STANDARDS

A. AASHTO HB - Standard Specifications for Highway Bridges; 2005, with Errata.
B. ASME B16.3 - Malleable Iron Threaded Fittings: Classes 150 and 300; 2021.
C. ASME B16.4 - Gray Iron Threaded Fittings: Classes 125 and 250; 2021.
D. ASME B16.22 - Wrought Copper and Copper Alloy Solder-Joint Pressure Fittings; 2021.
E. ASSE 1060 - Performance Requirements for Outdoor Enclosures for Fluid Conveying Components; 2017 (Reaffirmed 2025).
F. ASTM A307 - Standard Specification for Carbon Steel Bolts, Studs, and Threaded Rod 60 000 PSI Tensile Strength; 2021.
G. ASTM A563/A563M - Standard Specification for Carbon and Alloy Steel Nuts (Inch and Metric); 2021a.
H. ASTM D1785 - Standard Specification for Poly(Vinyl Chloride) (PVC) Plastic Pipe, Schedules 40, 80, and 120; 2021a.
I. ASTM D2466 - Standard Specification for Poly(Vinyl Chloride) (PVC) Plastic Pipe Fittings, Schedule 40; 2024.
J. ASTM D2467 - Standard Specification for Poly(Vinyl Chloride) (PVC) Plastic Pipe Fittings, Schedule 80; 2024.
K. ASTM D2855 - Standard Practice for the Two-Step (Primer and Solvent Cement) Method of Joining Poly (Vinyl Chloride) (PVC) or Chlorinated Poly (Vinyl Chloride) (CPVC) Pipe and Piping Components with Tapered Sockets; 2020 (Reapproved 2024).
L. ASTM D3035 - Standard Specification for Polyethylene (PE) Plastic Pipe (DR-PR) Based on Controlled Outside Diameter; 2022.
M. ASTM D3139 - Standard Specification for Joints for Plastic Pressure Pipes using Flexible Elastomeric Seals; 2019 (Reapproved 2025).
N. ASTM F1960 - Standard Specification for Cold Expansion Fittings with PEX Reinforcing Rings for Use with Cross-Linked Polyethylene (PEX) and Polyethylene of Raised Temperature (PE-RT) Tubing; 2024.
O. AWWA C500 - Metal-Seated Gate Valves for Water Supply Service; 2019.
P. AWWA C502 - Dry-Barrel Fire Hydrants; 2024.
Q. AWWA C504 - Rubber-Seated Butterfly Valves; 2023.
R. AWWA C508 - Swing-Check Valves for Waterworks Service, 2-In. Through 48-In. (50-mm Through 1,200-mm) NPS; 2025.
S. AWWA C509 - Resilient-Seated Gate Valves for Water Supply Service; 2023.
T. AWWA C606 - Grooved and Shouldered Joints; 2022.
U. AWWA C800 - Underground Service Line Valves and Fittings; 2021.
V. AWWA C900 - Polyvinyl Chloride (PVC) Pressure Pipe and Fabricated Fittings, 4 In. through 60 In. (100 mm through 1500 mm); 2022.
W. AWWA C901 - Polyethylene (PE) Pressure Pipe, Tubing, and Fittings, 3/4 In. (19 mm) Through 3 In. (76 mm), for Water Service; 2025.
X. NSF 61 - Drinking Water System Components - Health Effects; 2024.
Y. UL 246 - Hydrants for Fire-Protection Service; Current Edition, Including All Revisions.

1.4 ADMINISTRATIVE REQUIREMENTS

A. Preinstallation Meeting: Conduct a preinstallation meeting at least one week prior to the start of the work of this section; require attendance by all affected installers.
B. Sequencing: Ensure that utility connections are achieved in an orderly and expeditious manner.

1.5 SUBMITTALS

A. See Section 013000 - Administrative Requirements, for submittal procedures.
B. Product Data: Provide data on pipe materials, pipe fittings, valves and accessories.
C. Manufacturer's Certificate: Certify that products meet or exceed specified requirements.
D. Project Record Documents: Record actual locations of piping mains, valves, connections, thrust restraints, and invert elevations. Identify and describe unexpected variations to subsoil conditions or discovery of uncharted utilities.

1.6 QUALITY ASSURANCE

A. Perform Work in accordance with Morongo Band of Mission Indians requirements.

1.7 DELIVERY, STORAGE, AND HANDLING

A. Deliver and store valves in shipping containers with labeling in place.
B. Protect crosslinked polyethylene tubing from direct and indirect UV exposure.

1.8 WARRANTY

A. See Section 017800 - Closeout Submittals, for additional warranty requirements.
B. Correct defective Work within a ten year period after Date of Substantial Completion.
C. Provide ten year manufacturer warranty for water utility items.

PART 2 PRODUCTS

2.1 WATER PIPE

A. Manufacturers:
   1. Any Manufacturer Meeting Specifications
   2. Substitutions: See Section 016000 - Product Requirements.
B. PVC Pipe: ASTM D1785 Schedule 40; ASTM D1785 Schedule 80; ASTM D2241 SDR 26 for 160 psig rating; ASTM D2241 SDR 41 for 100 psig rating; ASTM D2241 SDR 21 for 200 psig rating.
   1. Fittings: ASTM D2466, PVC.
   2. Joints: ASTM D2855, solvent weld.
C. PVC Pipe: AWWA C900 Class 150.
   1. Fittings: AWWA C111/A21.11, Schedule 40 per ASTM D2466 or schedule 80 per ASTM D2467.
   2. Joints: ASTM D3139 compression gasket ring.
D. Polyethylene Pipe; ASTM D3035, for 45 psig pressure rating; ASTM D3035, for 60 psig pressure rating; ASTM D3035, for 80 psig pressure rating; ASTM D3035, for 100 psig pressure rating; ASTM D3035, for 130 psig pressure rating; ASTM D3035, for 145 psig pressure rating; or ASTM D3035, for 160 psig pressure rating:
   1. Fittings: AWWA C901, molded.
   2. Joints: Compression.
E. Polyethylene Pipe: AWWA C901:
   1. Fittings: AWWA C901, molded.
   2. Joints: Compression.
F. Trace Wire: Magnetic detectable conductor, brightly colored plastic covering, imprinted with "Water Service" in large letters.

2.2 VALVES

A. Valves: Manufacturer's name and pressure rating marked on valve body.
B. Gate Valves Up To 3 Inches:
    1. Manufacturers:
        a. EJ: www.ejco.com/#sle.
        b. Mueller
        c. Kennedy Valve Company
        d. Clow
        e. Substitutions: See Section 016000 - Product Requirements.
    2. Brass or Bronze body, non-rising stem, inside screw, single wedge or disc, compression ends, with control rod, post indicator, valve key and extension box.
C. Gate Valves 3 Inches and Over:
    1. Manufacturers:
        a. EJ: www.ejco.com/#sle.
        b. Mueller
        c. Kennedy Valve Company
        d. Clow
        e. Substitutions: See Section 016000 - Product Requirements.
    2. AWWA C500, iron body, bronze trim, non-rising stem with square nut, single wedge, flanged ends, control rod, and extension box.

2.3 HYDRANTS

A. Hydrants: Type as required by utility company.
B. Hydrants: AWWA C502, dry barrel type.
    1. Manufacturers:
        a. EJ: www.ejco.com/#sle.
            1) Mueller.
            2) Kennedy Valve Company.
            3) Pratt
            4) Substitutions: See Section 016000 - Product Requirements.
    2. Inside dimension:7 inches minimum, with minimum 5 inches diameter valve seat opening.
    3. Minimum net water area of barrel not less than 190 percent of valve opening.
    4. 6 inch bell or mechanical joint inlet connection with accessories, gland bolts, and gaskets.
C. Hydrant Extensions: Fabricate in multiples of 6 inches with rod and coupling to increase barrel length.
D. Hose and Streamer Connection: Match sizes with utility company.
E. Pressure Rating: According to utility company.
F. Finish: Primer and two coats of enamel in color required by utility company.

2.4 BEDDING AND COVER MATERIALS

A. Bedding: As specified in Section 312316.13.
B. Cover: As specified in Section 312316.13.

2.5 ACCESSORIES

A. Concrete for Thrust Restraints: Concrete type specified in Section 033000.

PART 3 EXECUTION

3.1 EXAMINATION

A. Verify that building service connection and municipal utility water main size, location, and invert are as indicated.

3.2 PREPARATION

A. Cut pipe ends square, ream pipe and tube ends to full pipe diameter, remove burrs.
B. Remove scale and dirt on inside and outside before assembly.
C. Prepare pipe connections to equipment with flanges or unions.

3.3 TRENCHING

A. See the sections on excavation and fill for additional requirements.
B. Hand trim excavation for accurate placement of pipe to elevations indicated.
C. Form and place concrete for pipe thrust restraints at each change of pipe direction. Place concrete to permit full access to pipe and pipe accessories. Provide thrust restraint bearing on subsoil.
D. Backfill around sides and to top of pipe with cover fill, tamp in place and compact, then complete backfilling.

3.4 INSTALLATION - PIPE

A. Maintain separation of water main from sewer, gas, electrical, and communication piping.
B. Group piping with other site piping work whenever practical.
C. Establish elevations of buried piping to ensure not less than 3 feet of cover.
D. Install pipe to indicated elevation to within tolerance of 5/8 inches.
E. Install ductile iron piping and fittings to AWWA C600.
F. Install grooved and shouldered pipe joints to AWWA C606.
G. Install crosslinked polyethylene tubing and fittings to AWWA C904.
H. Route pipe in straight line.
I. Install pipe to allow for expansion and contraction without stressing pipe or joints.
J. Install access fittings to permit disinfection of water system performed under Section 330110.58.
K. Slope water pipe and position drains at low points.
L. Install trace wire 6 inches above top of pipe; coordinate with Section 312316.13.

3.5 INSTALLATION - VALVES, HYDRANTS, BACKFLOW PREVENTERS

A. Set valves on solid bearing.
B. Center and plumb valve box over valve. Set box cover flush with finished grade.
C. Set hydrants plumb; locate pumper nozzle perpendicular to and facing roadway in accordance with Section 211100.
D. Set hydrants to grade, with nozzles at least 20 inches above ground in accordance with Section 211100.
E. Locate control valve 4 inches away from hydrant.
F. Provide a drainage pit 36 inches square by 24 inches deep filled with 2 inches washed gravel. Encase elbow of hydrant in gravel to 6 inches above drain opening. Do not connect drain opening to sewer.
G. Paint hydrants in accordance with Section 099113.

3.6 SERVICE CONNECTIONS

A. Provide water service to utility company requirements.
B. Provide sleeve in wall for service main. Support with reinforced concrete bridge. Calk enlarged sleeve watertight.

3.7 FIELD QUALITY CONTROL

A. See Section 014000 - Quality Requirements, for additional requirements.
B. Perform field inspection and testing in accordance with Section 014000.
C. Pressure test water piping.
D. If tests indicate Work does not meet specified requirements, remove Work, replace and retest at no cost to Owner.

END OF SECTION

SECTION 333113 - SITE SANITARY SEWERAGE GRAVITY PIPING

PART 1 GENERAL

1.1 SECTION INCLUDES

A. Sanitary sewerage drainage piping, fittings, and accessories.
B. Connection of building sanitary drainage system to municipal sewers

1.2 RELATED REQUIREMENTS

A. Section 033000 - Cast-in-Place Concrete

1.3 DEFINITIONS

A. Bedding: Fill placed under, beside and directly over pipe, prior to subsequent backfill operations.

1.4 REFERENCE STANDARDS

A. ASTM D2321 - Standard Practice for Underground Installation of Thermoplastic Pipe for Sewers and Other Gravity-Flow Applications; 2025.
B. ASTM D3350 - Standard Specification for Polyethylene Plastics Pipe and Fittings Materials; 2024.
C. AWWA C111/A21.11 - Rubber-Gasket Joints for Ductile-Iron Pressure Pipe and Fittings; 2023.

1.5 ADMINISTRATIVE REQUIREMENTS

A. Coordination: Coordinate the installation of all sewer pipes and appurtenances with size, location and installation of service utilities.
B. Sequencing: Ensure that utility connections are achieved in an orderly and expeditious manner.

1.6 SUBMITTALS

A. See Section 013000 - Administrative Requirements, for submittal procedures.
B. Product Data: Provide data indicating pipe, pipe accessories.
C. Manufacturer's Certificate: Certify that products meet or exceed specified requirements.
D. Field Quality Control Submittals: Document results of field quality control testing.
E. Project Record Documents:
   1. Record location of pipe runs, connections, cleanouts, and invert elevations.
   2. Identify and describe unexpected variations to subsoil conditions or discovery of uncharted utilities.

PART 2 PRODUCTS

2.1 SEWER PIPE MATERIALS

A. Provide products that comply with applicable code(s).
B. Plastic Pipe: ASTM D3350, SDR 11, High Density Polyethylene (HDPE) material; inside nominal diameter of 4 inches, with cell classification of 335434C or better, thermal butt fusion joints and fittings in accordance with manufacturer's recommendations; pipe and fittings same material utilizing transition fittings when connecting to existing piping.
C. Joint Seals: Mechanical clamp ring type, stainless steel; expanding and contracting sleeve, ribbed gasket for positive seal.
D. Fittings: Same material as pipe molded or formed to suit pipe size and end design, in required tee, bends, elbows, cleanouts, reducers, traps and other configurations required.

2.2 PIPE ACCESSORIES

A. Trace Wire: Magnetic detectable conductor, brightly colored plastic covering, imprinted with "Sewer Service" in large letters.

B. Casing Spacer: Polyethylene spacer designed to maintain pipe casing integrity.

1. Manufacturers:

a. Advance Products & Systems, LLC: www.apsonline.com/#sle.

b. Substitutions: See Section 016000 - Product Requirements.

2.3 CLEANOUT

A. Lid and Frame: Cast iron construction, hinged lid.

1. Lid Design: Open checkerboard grille.

2. Nominal Lid and Frame Size: 6 inches.

2.4 BEDDING AND COVER MATERIALS

A. Pipe Bedding Material: As specified in Section 312316.13.

B. Pipe Cover Material: As specified in Section 312316.13.

PART 3 EXECUTION

3.1 GENERAL

A. Perform work in accordance with thee plans and specifications.

3.2 TRENCHING

A. See Section 312316.13 for additional requirements.

B. Hand trim excavation for accurate placement of pipe to elevations indicated.

C. Backfill around sides and to top of pipe with cover fill, tamp in place and compact, then complete backfilling.

3.3 INSTALLATION - PIPE

A. Verify that trench cut is ready to receive work and excavations, dimensions, and elevations are as indicated on the drawings.

B. Install pipe, fittings, and accessories in accordance with manufacturer's instructions. Seal watertight.

1. Plastic Pipe: Also comply with ASTM D2321.

C. Lay pipe to slope gradients noted on drawings; with maximum variation from true slope of 1/8 inch in 10 feet.

D. Connect to building sanitary sewer outlet and bridge stub-outs.

E. Install trace wire 6 inches above top of pipe.

3.4 INSTALLATION - CLEANOUTS

A. Form bottom of excavation clean and smooth to correct elevation.

B. Form and place cast-in-place concrete base pad, with provision for sanitary sewer pipe end sections.

C. Establish elevations and pipe inverts for inlets and outlets as indicated.

D. Mount lid and frame level in grout, secured to top cone section to elevation indicated.

3.5 FIELD QUALITY CONTROL

A. Perform field inspection and testing in accordance with Section 014000.

B. If tests indicate Work does not meet specified requirements, remove Work, replace and retest at no cost to Owner.

3.6 PROTECTION

A. Protect pipe and bedding cover from damage or displacement until backfilling operation is in progress.

END OF SECTION

SECTION 335216 - GAS HYDROCARBON PIPING

PART 1 GENERAL

1.1 SECTION INCLUDES

A. Pipe and fittings for natural gas distribution on site outside buildings.
B. Propane storage tanks.

1.2 RELATED REQUIREMENTS

A. Section 221005 - Plumbing Piping.
B. Section 231123 - Facility Natural-Gas Piping.
C. Section 260583 - Wiring Connections.

1.3 REFERENCE STANDARDS

A. ASME B16.11 - Forged Fittings, Socket-Welding and Threaded; 2021.
B. ASME BPVC-VIII-1 - Boiler and Pressure Vessel Code, Section VIII, Division 1: Rules for Construction of Pressure Vessels; 2025, with Errata.
C. ASME BPVC-IX - Boiler and Pressure Vessel Code, Section IX - Qualification Standard for Welding, Brazing, and Fusing Procedures; Welders; Brazers; and Welding, Brazing, and Fusing Operators; 2025, with Errata.
D. ASME BPVC - Boiler and Pressure Vessel Code; 2025.
E. ASTM A53/A53M - Standard Specification for Pipe, Steel, Black and Hot-Dipped, Zinc-Coated, Welded and Seamless; 2024.
F. ASTM A234/A234M - Standard Specification for Piping Fittings of Wrought Carbon Steel and Alloy Steel for Moderate and High Temperature Service; 2025.
G. ASTM B32 - Standard Specification for Solder Metal; 2020.
H. AWS A5.8M/A5.8 - Specification for Filler Metals for Brazing and Braze Welding; 2019.
I. AWWA C105/A21.5 - Polyethylene Encasement for Ductile-Iron Pipe Systems; 2018.
J. NFPA 58 - Liquefied Petroleum Gas Code; 2024, with Amendment.

1.4 SUBMITTALS

A. See Section 013000 - Administrative Requirements, for submittal procedures.
B. Product Data: Provide data on pipe materials, pipe fittings, valves and accessories.
C. Manufacturer's Certificate: Certify that products meet or exceed specified requirements.
D. Project Record Documents: Record actual locations of pipe mains, valves, connections, and invert elevations. Identify and describe unexpected variations to subsoil conditions or discovery of uncharted utilities.

1.5 QUALITY ASSURANCE

A. Perform Work in accordance with Morongo Band of Mission Indians and utility company requirements.
B. Welding Materials and Procedures: Comply with SME BPVC and applicable state regulations.
C. Welders Certification: In accordance with ASME BPVC-IX.
D. Comply with NFPA 58; ANSI Z223.1 and ASME B31.8.

1.6 DELIVERY, STORAGE, AND HANDLING

A. Deliver and store valves in shipping containers with labeling in place.

PART 2 PRODUCTS

2.1 PIPE

A. Manufacturers:
   1. Any Manufacturer Meeting Specifications.
   2. Substitutions: See Section 016000 - Product Requirements.
B. Natural Gas Piping; Specified in Section 231123.
C. Steel Pipe Below Ground: ASTM A53/A53M, Schedule 40:
   1. Fittings: ASME B16.11 forged steel, or ASTM A234/A234M wrought steel welding type.
   2. Joints: Welded, gas tungsten arc method; Welded, shielded metal arc method; Welded by any appropriate method.
   3. Jackets: AWWA C105/A21.5 polyethylene jacket; Double layer, half lapped, 10 mil polyethylene tape.
D. Steel Pipe Above Ground: ASTM A53/A53M, Schedule 40:
   1. Fittings: ASME B16.3 malleable iron, ASME B16.11 forged steel, or ASTM A234/A234M wrought steel welding type.
   2. Joints: Welded.
E. Trace Wire: Magnetic detectable conductor, brightly colored plastic covering, imprinted with "Natural Gas Service " in large letters.

2.2 BEDDING AND COVER MATERIALS

A. Bedding: As specified in Section 312316.13.
B. Cover: As specified in Section 312316.13.

PART 3 EXECUTION

3.1 EXAMINATION

A. Verify that building service connection and utility gas main size, location and invert are as indicated.

3.2 PREPARATION

A. Cut pipe ends square, ream pipe and tube ends to full pipe diameter, remove burrs. Bevel plain end ferrous pipe over 2 inches diameter.
B. Remove scale and dirt on inside and outside before assembly.
C. Prepare piping connections with flanges and unions.

3.3 TRENCHING

A. See Section 312316.13 for additional requirements.
B. Hand trim excavation for accurate placement of pipe to elevations indicated.
C. Backfill around sides and to top of pipe with cover fill, tamp in place and compact, then complete backfilling.

3.4 INSTALLATION - PIPING

A. Maintain separation of gas line from sewer, water, electrical, and communication piping and conduits in accordance with code.
B. Group piping with other site piping work whenever practical.
C. Route piping in straight line.
D. Install piping to conserve space and not interfere with use of site space.
E. Install piping to allow for expansion and contraction without stressing pipe or joints.
F. Install cocks and other fittings.

G. Establish elevations of buried piping to ensure not less than 36 inches of cover in non-travelled areas and 48 inches of cover in driveways and parking areas.
H. Wrap couplings and fittings of steel pipe with polyethylene tape and heat shrink over pipe.
I. Install trace wire 6 inches above top of pipe; coordinate with Section 312316.13.
J. Center and plumb valve box over valve. Set box cover flush with finished ground surface. Prevent shock or stress from being transmitted through valve box to valve.
K. Wrap valve and valve box with polyethylene tape and heat shrink.
L. Paint valves and valve boxes with rust inhibitive primer and one coat of epoxy paint.

3.5 SERVICE CONNECTIONS

A. Provide sleeve in foundation wall for gas service main. Seal enlarged sleeve watertight.
B. Anchor service main to interior surface of foundation wall.
C. Install service regulator adjacent to building wall in specified location.
D. Install service regulator and riser pipe to prevent undue stress upon service pipe.
E. Provide regulator vent with rain and insect proof opening, terminating away from building openings.

3.6 FIELD QUALITY CONTROL

A. Perform field inspection and testing in accordance with Section 014000.
B. If tests indicate Work does not meet specified requirements, remove Work, replace and retest at no cost to Owner.

END OF SECTION

SECTION 441373 - SELECTIVE CATALYTIC REDUCTION (SCR) SYSTEM STANDARD

PART 1 GENERAL

1.1 GENERAL REQUIREMENTS

A. This Specification covers the minimum requirements for a Selective Catalyst Reduction System (SCR) to be installed on the fuel fired equipment to reduce NOx emissions using low temperature catalyst and Urea.
B. The Vendor shall supply and guarantee the complete SCR System as defined by this Specification.
C. The Vendor shall have experience in supplying and installing minimum 30 SCR systems of equal or greater size on boilers or gas turbines in compliance with federal, state and local Rules or Regulations.

1.2 SUBMITTAL REQUIREMENTS

A. A Bill of Materials for all parts and equipment.
B. Tabulated system process showing all flows, pressures and temperatures at key points of the SCR system.
C. Project Schedule.
D. All drawings below will be provided at a minimum:
    1. General Arrangement Drawing.
    2. Foundation loads and equipment weights.
    3. Lifting diagrams showing the need for spreader bars, lifting frames, etc.
    4. All process and utility connections.
    5. Reactor housing and duct arrangements.
    6. Process Flow Diagram (PFD)
    7. Piping and Instrument Diagram (P&ID)
    8. Control wiring diagrams and schematics
    9. Bill of Materials

PART 2 PRODUCTS

2.1 DESIGN AND SCOPE OF SUPPLY BY SCR VENDOR

A. SCR reactor housing shall be made of carbon steel. It shall have test ports upstream and downstream of the catalyst bed.
B. The housing shall have a designated space for one (1) additional future layer of catalyst. This provision enables the SCR system to comply with more stringent NOx regulations in the future by adding another layer of the catalyst.
C. The housing shall be insulated to comply with OSHA requirements and outer jacketing shall be provided.
D. All catalyst shall be in prefabricated modules for loading through a vertical loading hatch on the top of the reactor.
E. DESIGN REQUIREMENTS
F. General
    1. The SCR system shall be properly designed to reduce NOx emission from 5 PPM (when firing NG fuel) corrected to 15% O2 out of the gas turbine to sub 2 PPM corrected to 15% O2 while maintaining ammonia slip below 5 PPM corrected to 15% O2. The vendor shall obtain the gas turbine performance data from the owner or supplier of the equipment and shall ascertain the design conditions before the SCR system design.
    2. Vendor shall be responsible for the proper design and amount of NOx catalyst, SCR catalyst modules, housing, urea injection, transition ducts, and other equipment to ensure proper gas flow distribution, ammonia distribution, and temperature limits over the complete range of operation.
    3. Ambient Ammonia Detection – NH3 Detector 0 – 100 ppm with alarm and strobe light set at 25 ppm.

G. Urea Injection System

1. One air atomized nozzles with a constant flow of demineralized water are utilized to assure an optimum atomized mist with variable urea flow across the gas turbine outlet duct. A full packaged stand alone housing to be provided. It shall incorporate the following:
   a. PLC controller and wiring
   b. Two (2) metering pumps (one dedicated, one standby)
   c. Urea filters
   d. Demineralized water filters
   e. Instrument air regulator
   f. Urea flow meter
   g. Pressure transmitters
2. Direct urea injection system shall be fabricated with 316 stainless steel piping, and located for required distribution and conversion of urea to ammonia upstream of catalyst beds. Sufficient distance from injection point(s) to catalyst shall be provided.
3. A static mixer may be provided to ensure uniform ammonia concentration in the flue gas stream. This will be verified through physical flow modeling to assure the required RMS levels for velocity and NH3/NOx are met.

H. Controls

1. The system shall utilize a PLC based control system.
2. The controls shall have a start permissive before it activates the urea metering pump. It must determine that the gas turbine is running, and that the minimum stack inlet catalyst temperature has been reached.
3. The controls will adjust the urea metering pump speed to match flow demand based on the gas turbine fuel flow conditions.
4. Controls shall be A-B CompactLogix with 10” color PanelView touch screen. Control HMI must indicate urea flow and gas turbine exit gas temperature.

I. NOx Catalyst

1. The SCR system shall use low temperature catalyst effective for flue gas temperature range of 400 deg. F to 800 deg. F. Catalyst shall be of most advanced corrugated type with sufficient cell density for reasonable physical size of the SCR reactor housing. Catalyst elements are contained in stainless steel modules for easy handling or installation. The catalyst shall be Vanadium Pentoxide on a Titanium Dioxide base for maximum effectiveness at low flue gas temperature.
2. SCR Catalyst - Umicore GTC-902 corrugated catalyst.
3. Sufficient catalyst volume shall be provided to treat the flue gas to meet the NOx emission level required or specified. Vendor to provide supporting documentation from the catalyst manufacturer. Vendor or installation contractor shall ensure installation of catalyst and sealing around the catalyst modules are done in accordance with the catalyst manufacturer’s recommendation.
4. Catalysts shall be designed for low pressure loss. Maximum allowable pressure drop is 2 inch water column.
5. Catalyst, modules, reactor housings, duct work and supports shall be designed to withstand thermal expansion and contraction that is typical during normal turbine operation as well as heat up, operational swings, and cool down.
6. Vendor shall design the system so that the catalyst modules can be easily removed from the housing.
7. The warranty period must be a minimum of 39 calendar months from the date of delivery or 36 calendar months from the initial flue gas through the catalyst or 24,000 hours, whichever expires earlier.
   a. Housings, Casing, and Ducting
8. The SCR housing and transition sections shall be fabricated with carbon steel plate of 3⁄16-inch minimum thickness. The plate is suitably stiffened to limit deflection and prevent vibration. The inner plate and reactor casings shall be capable of withstanding 1½ times the maximum operating pressure or 20 inches water column, whichever is greater, and a minimum of 5 inches water column vacuum.
9. Positive seals around the catalyst beds and housing access door shall be provided to prevent ammonia slip, and to prevent leakage into the equipment room. Vendor shall provide proper lifting lugs for the housing.

10. Piping design, fabrication, inspection, and testing shall be in accordance with ANSI for applicable pressure and temperature.
11. Piping shall be fabricated to minimize the use of unions.
12. All lines that lead to gauges, controllers, and other sensing points shall have isolation valves.
13. Ammonia and urea piping shall be of a grade equal to 304 stainless or better.
14. The housing shall have tappings for an RTD upstream of the catalyst and for a differential pressure gauge (to indicate catalyst pressure drop).
15. The housing shall also have sampling ports upstream and downstream of the catalyst, to troubleshoot catalyst performance in the future.

J. SCR Housing
1. SCR system shall be designed and so arranged so that water from condensation or a tube leak from economizer does not fall on to SCR catalyst.
2. Insulation and Lagging
   a. The reactor housing, transitions and duct work shall be completely insulated and lagged. Insulation and lagging shall be externally applied.
   b. The insulation shall maintain a surface temperature not to exceed 140 deg. F based on an ambient still air temperature of 85 deg. F.
   c. Lagging shall be applied to cover the insulation. Lagging shall be with light weight metal of corrugated or boxed rib with a minimum thickness of 0.020 inches. Lagging shall be securely fastened to withstand prevailing wind at the site. The lagging and trim pieces shall be applied to prevent the intrusion of rain. The lagging shall protect the insulation and prevent under insulation corrosion.

K. Electrical
1. All electrical shall comply with the latest edition of the CEC.
2. Control enclosures, electrical devices and conduit shall be suitable for outdoor use.
3. Wiring, wire lugs and terminations shall be suitable for wet location.

L. Instrumentation
1. Gas Turbine fuel flow signal (4-20 mA) shall be the primary input for determining the Urea flow rate.
2. An RTD will be required for the measurement of the flue gas exhaust temperature upstream of the catalyst.
3. All valve components coming in contact with Urea shall be of stainless steel construction.
4. All transmitters shall have an output of 4-20 mA.
5. All RTD’s shall be Type K, dual element, spring-loaded with thermowell.
6. The housing shall have a differential pressure gauge to indicate catalyst pressure drop.

M. Painting
1. All carbon steel surfaces that are not insulated and are not lined, shall receive an SP-6 blast and a primer coat of Inorganic Zinc.
2. Stainless steel surfaces, electrical conduit, and galvanized surfaces shall not be painted. Valves shall be installed with the original manufacturer's finish.
3. Surface Preparation: SP-6 Commercial Blast Cleaning
4. Primer: Inorganic Zinc Primer
5. Final Coating: Manufacturer’s standard paint in Gray Color or Black.

PART 3 EXECUTION

3.1 INSPECTION AND TESTING

A. A hydrostatic test at 1½ times the design pressure of the flow control system and injection manifold shall be performed at the SCR System Vendor's facility. UFCU piping shall be hydrostatically tested at a minimum pressure of 130 PSIG. Air piping shall be bubble-leak tested at a minimum of 50 PSIG. The pressure test shall be successfully repeated after any repairs for leaks. Urea piping and injector shall be hydrostatically tested (air with soap water) again in the field before closing with insulation.

B. All UFCU instruments and controls shall be functionally tested at the Vendor's facility prior to shipment. All gauges and transmitters shall be calibrated to the greatest extent possible at Vendor's shop and checked upon start-up in the field.

PREPARATION FOR SHIPMENT

A. Preparation for shipment and material storage prior to shipment shall be in accordance with Vendor's standards. The Vendor shall be solely responsible for the adequacy of the preparation of the shipment. Adequate protection shall be provided against mechanical damage and degradation due to adverse weather conditions during shipment or storage.
B. The Vendor shall provide the Purchaser with the instructions necessary to preserve the integrity of the storage preparation after the equipment arrives at the job site.
C. Packing lists shall be furnished for each shipping crate or container.

CLOSE-OUT DOCUMENTATION

A. The following drawings and engineering data will be furnished:
    1. General Arrangement Drawing.
    2. Foundation loads and equipment weights.
    3. Lifting diagrams showing the need for spreader bars, lifting frames, etc.
    4. All process and utility connections.
    5. Reactor housing and duct arrangements.
    6. Process Flow Diagram (PFD)
    7. Piping and Instrument Diagram (P&ID)
    8. Control wiring diagrams and schematics
    9. Instrumentation and electrical wiring diagrams, including urea flow control panel.
    10. Urea injection system details, including all details of interface with ducting/casing.
    11. Operating instructions and maintenance manuals.
    12. Spare parts list, along with critical spare parts list. Catalyst handling procedure and procedure for checking catalyst and catalyst MSDS sheets.

5.2 INSTALLATION SUPERVISION, START-UP AND FIELD TESTING

A. The Vendor shall provide all equipment and labor required to perform the start up and be present during acceptance testing of the SCR system. This service shall be included in the base bid price if requested. In addition, submit per diem rates for Purchaser's reference.
B. Warranty Service Support must be available 24 hours a day.

5.3 PERFORMANCE GUARANTEE

A. The Vendor shall guarantee that the SCR System shall perform to the levels stated below:
B. NOx emissions shall not exceed 2 PPMvd corrected to 15% O2, through the operating range.
C. Ammonia slip shall not exceed 5 PPMvd corrected to 15% O2.
D. The warranty period must be a maximum of 39 calendar months from the date of delivery or 36 calendar months from the initial flue gas through the catalyst or 24,0000 hours, whichever expires earlier. The pressure drop through the catalyst module, static mixer and housing unit which starts from the inlet flange of the reactor housing to the outlet flange of the reactor housing shall not exceed 2 inches water column at full load conditions.

5.4 WARRANTY

A. The Vendor shall warranty all equipment to be free from defects, poor workmanship, and failure of components for twelve (12) months after start-up or eighteen (18) months after delivery to the site provided that the equipment is stored and/or operated within the design and operating parameters set forth.

B. Any repair or replacement work required by the Vendor due to failure of equipment shall include only parts/material replacement, labor to be covered by the installer.

END OF SECTION

APPENDIX A

FIRE PROTECTION PRODUCT DATA SHEETS

FIRE SPRINKLER PRODUCT DATA SHEETS

Morongo Combined Heating & Power (CHP) Project

PREPARED FOR

Delawie
1515 Morena Blvd
San Diego, CA 92110 USA

Project #: 1HYA25002
Date: February 19, 2026

PREPARED BY

Bill Kerbein
11545 West Bernardo Court, Suite 300
San Diego, California 92127, USA

wkerbein@jensenhughes.com
619-310-9593

JENSEN HUGHES

Copyright ©2026 Jensen Hughes, Inc.
All Rights Reserved.T0123

Worldwide Contacts | www.tyco-fire.com

Series TY-FRB – 2.8, 4.2, 5.6, and 8.0 K-Factor Upright, Pendent, and Recessed Pendent Sprinklers Quick Response, Standard Coverage

IMPORTANT

Refer to Technical Data Sheet TFP2300 for warnings pertaining to regulatory and health information.

Always refer to Technical Data Sheet TFP700 for the "INSTALLER WARNING" that provides cautions with respect to handling and installation of sprinkler systems and components. Improper handling and installation can permanently damage a sprinkler system or its components and cause the sprinkler to fail to operate in a fire situation or cause it to operate prematurely.

Scan the QR code or enter the URL in a web browser to access the most up-to-date electronic version of this document. Data rates may apply.

docs.jci.com/tycofire/tfp171

General Description

The TYCO Series TY-FRB 2.8, 4.2, 5.6, and 8.0 K-factor Upright, Pendent, and Recessed Pendent Sprinklers described in herein are quick response, standard coverage, decorative 3 mm glass bulb-type spray sprinklers. They are designed for use in light or ordinary hazard, commercial occupancies such as banks, hotels, and shopping malls.

The sprinkler, where applicable, is intended for use in areas with a finished ceiling. This recessed pendent sprinkler uses one of the following recessed escutcheons:

- Two-piece Style 10 (1/2 in. NPT) or Style 40 (3/4 in. NPT) Recessed Escutcheon with 1/2 in. (12,7 mm) of recessed adjustment or up to 3/4 in. (19,1 mm) of total adjustment from the flush pendent position.
- Two-piece Style 20 (1/2 in. NPT) or Style 30 (3/4 in. NPT) Recessed Escutcheon with 1/4 in. (6,4 mm) of recessed adjustment or up to 1/2 in. (12,7 mm) of total adjustment from the flush pendent position.

The adjustment provided by the recessed escutcheon reduces the accuracy to which the fixed pipe drops to the sprinklers must be cut.

Corrosion-resistant coatings, where applicable, are utilized to extend the life of copper alloy sprinklers beyond what would be obtained when exposed to corrosive atmospheres. Although corrosion-resistant coated sprinklers have passed the standard corrosion tests of the applicable approval agencies, the testing is not representative of all possible corrosive atmospheres. Consequently, it is recommended that the end user be consulted with respect to the suitability of these coatings for any given corrosive environment. The effects of ambient temperature, concentration of chemicals, and gas/chemical velocity, should be considered, as a minimum, along with the corrosive nature of the chemical to which the sprinklers will be exposed.

Series TY-FRB Upright and Pendent Sprinklers may be used in intermediate level applications when the appropriate sprinkler type is installed and properly protected. For detailed information about intermediate level versions of Series TY-FRB sprinklers, refer to Technical Data Sheet TFP356. For additional guidance on sprinkler guards, shields, and intermediate level accessories, refer to Technical Data Sheet TFP780.

For in-rack applications where sprinklers are protected by solid shelves or horizontal barriers, use the unshielded Series TY-FRB Upright and Pendent Sprinklers, TY3131, TY3231, TY4131 and TY4231, instead of their intermediate level counterparts described in Technical Data Sheet TFP356.

NOTICE

The Series TY-FRB 2.8, 4.2, 5.6, and 8.0 K-factor Upright, Pendent, and Recessed Pendent Sprinklers described herein must be installed and maintained in compliance with this document and with the applicable standards of the National Fire Protection Association (NFPA), in addition to the standards of any authorities having jurisdiction. Failure to do so may impair the performance of these devices.

The owner is responsible for maintaining their fire protection system and devices in proper operating condition. The installing contractor or sprinkler manufacturer should be contacted with any questions.

NFPA 13 prohibits installation of 1/2 in. NPT sprinklers with K-factors greater than 5.6 in new construction. They are intended for retrofit in existing sprinkler systems only.

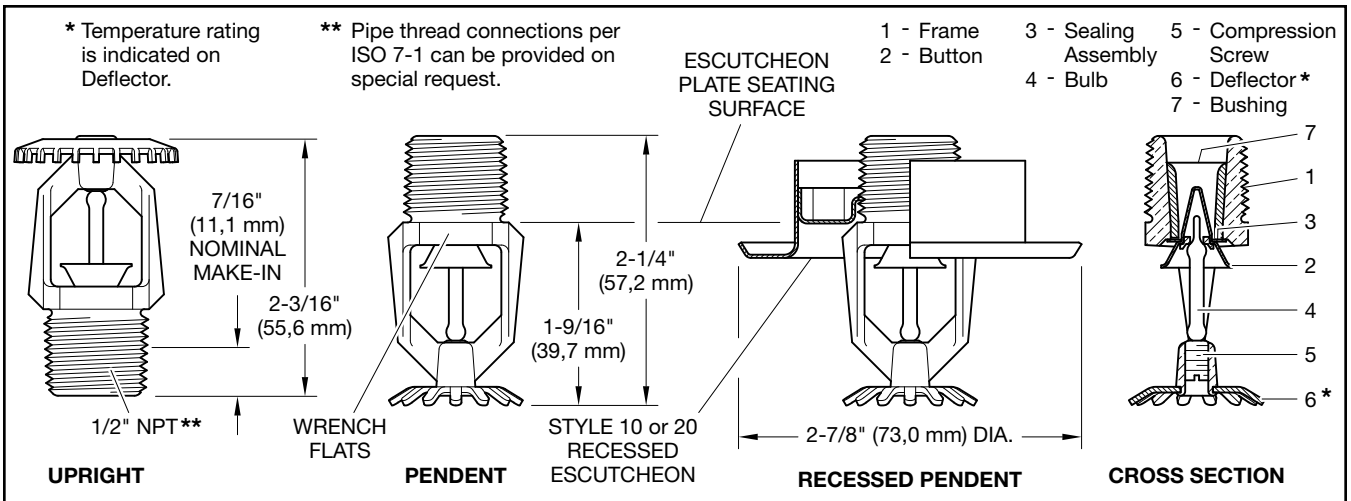

FIGURE 1
QUICK RESPONSE SERIES TY-FRB UPRIGHT (TY1131) AND PENDENT (TY1231) SPRINKLERS
2.8 K-FACTOR, 1/2 IN. NPT

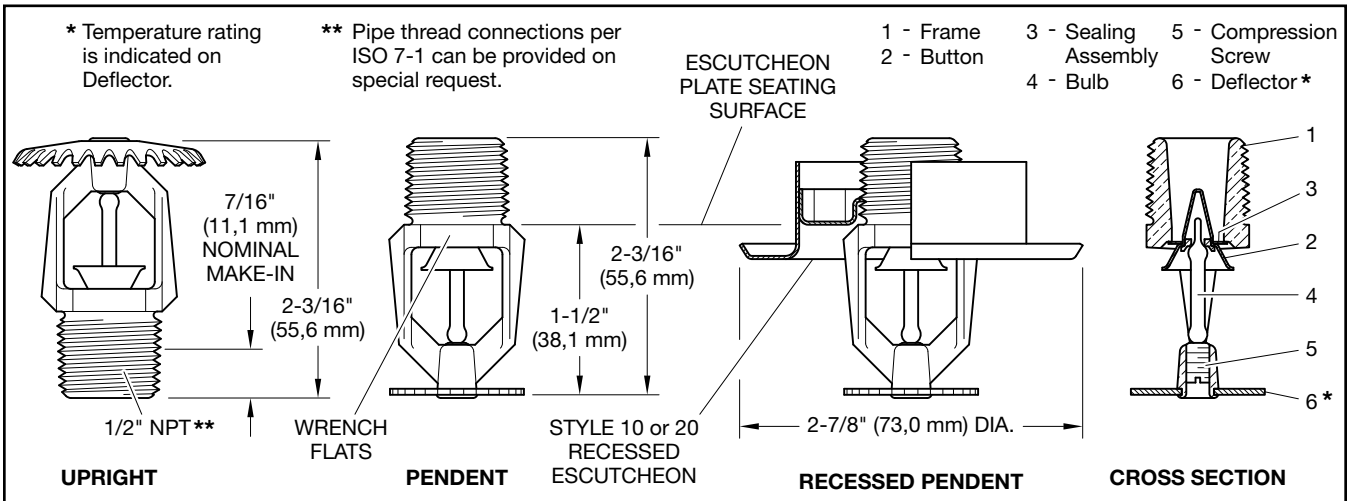

FIGURE 2
QUICK RESPONSE SERIES TY-FRB UPRIGHT (TY2131) AND PENDENT (TY2231) SPRINKLERS
4.2 K-FACTOR, 1/2 IN. NPT

Sprinkler Identification Number (SIN)

TY1131 . . . Upright 2.8K, 1/2 in. NPT
TY1231 . . Pendent 2.8K, 1/2 in. NPT
TY2131 . . . Upright 4.2K, 1/2 in. NPT
TY2231 . . Pendent 4.2K, 1/2 in. NPT
TY3131 . . . Upright 5.6K, 1/2 in. NPT
TY3231 . . Pendent 5.6K, 1/2 in. NPT
TY4131 . . . Upright 8.0K, 3/4 in. NPT
TY4231 . . Pendent 8.0K, 3/4 in. NPT
TY4831 . . . Upright 8.0K, 1/2 in. NPT
TY4931 . . Pendent 8.0K, 1/2 in. NPT

Technical Data

Approvals
UL and C-UL Listed
FM, LPCB, VdS Approved

Note: *For complete approval information, including corrosion-resistant status, see Tables A, B, C and D.*

Maximum Working Pressure
See Table E

Discharge Coefficient
K=2.8 gpm/psi½ (40,3 Lpm/bar½)
K=4.2 gpm/psi½ (60,5 Lpm/bar½)
K=5.6 gpm/psi½ (80,6 Lpm/bar½)
K=8.0 gpm/psi½ (115,2 Lpm/bar½)

Temperature Rating
See Tables A and B

Finishes
Sprinkler: See Table D

Recessed Escutcheon: Signal or Pure White, Grey Aluminum, Jet Black, Chrome Plated, or Natural Brass

Physical Characteristics

Frame	Bronze
Button	Brass/Copper
Sealing Assembly	Beryllium Nickel w/TEFLON
Bulb	Glass
Compression Screw	Bronze
Deflector	Copper/Bronze
Bushing (K=2.8)	Bronze

Operation

The glass bulb contains a fluid that expands when exposed to heat. When the rated temperature is reached, the fluid expands sufficiently to shatter the glass bulb, allowing the sprinkler to activate and water to flow.

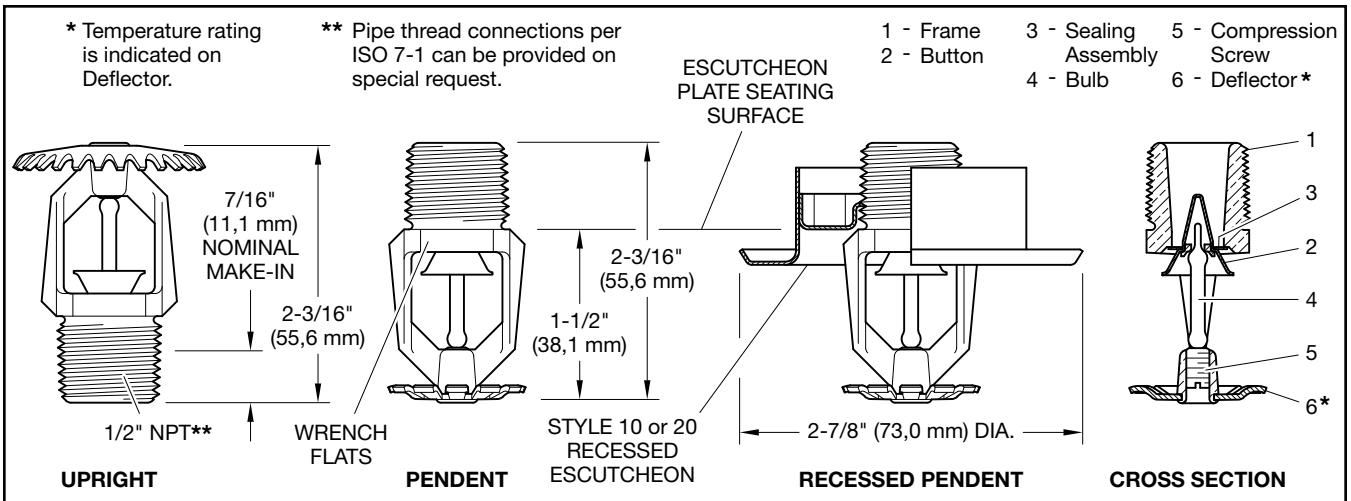

FIGURE 3
QUICK RESPONSE SERIES TY-FRB UPRIGHT (TY3131) AND PENDENT (TY3231) SPRINKLERS
5.6 K-FACTOR, 1/2 IN. NPT

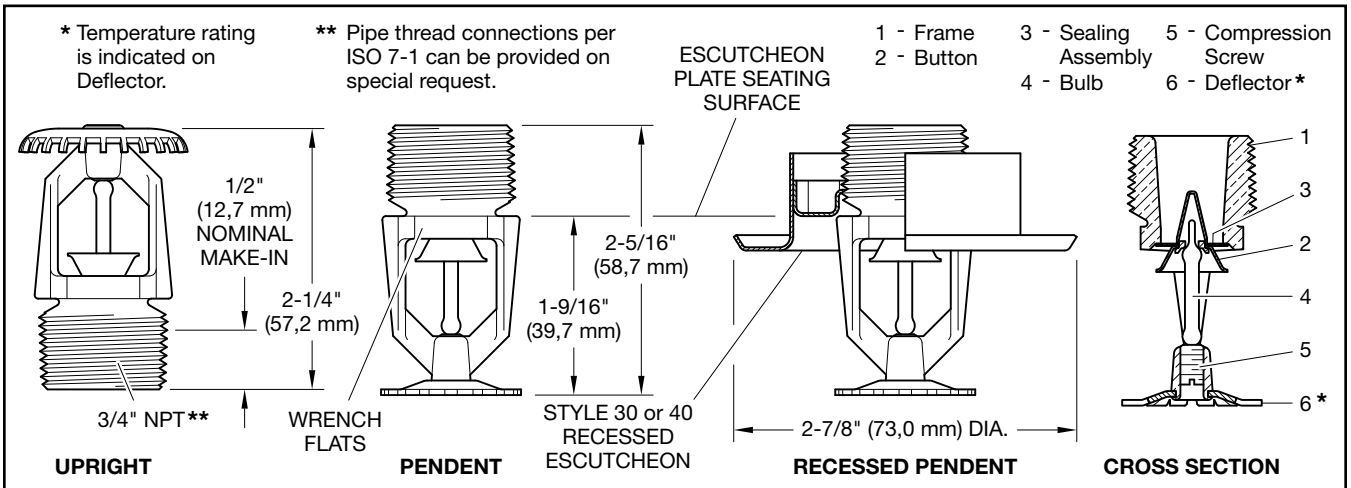

FIGURE 4
QUICK RESPONSE SERIES TY-FRB UPRIGHT (TY4131) AND PENDENT (TY4231) SPRINKLERS
8.0 K-FACTOR, 3/4 IN. NPT

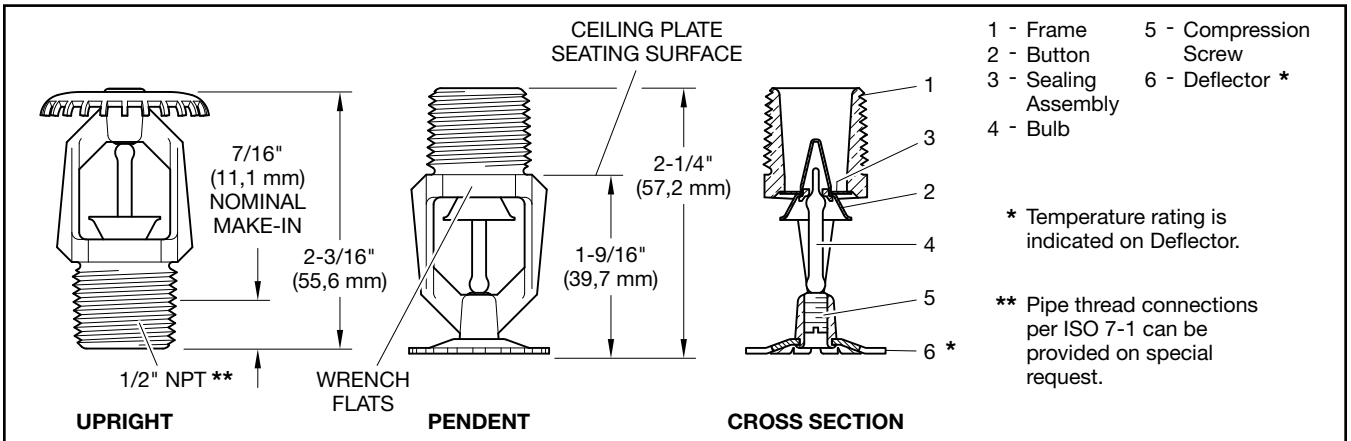

FIGURE 5
QUICK RESPONSE SERIES TY-FRB UPRIGHT (TY4831) AND PENDENT (TY4931) SPRINKLERS
8.0 K-FACTOR, 1/2 IN. NPT

Design Criteria

The TYCO Series TY-FRB 2.8, 4.2, 5.6, and 8.0 K-factor Upright, Pendent, and Recessed Pendent Sprinklers are intended for fire protection systems designed in accordance with the standard installation rules recognized by the applicable Listing or Approval agency, such as UL Listing based on the requirements of NFPA 13 and FM Approval based on the requirements of the FM Global Loss Prevention Data Sheets. Use only the style 10, 20, 30, or 40 recessed escutcheon, as applicable, for recessed pendent installations.

Installation

The TYCO Series TY-FRB 2.8, 4.2, 5.6, and 8.0 K-factor Upright, Pendent, and Recessed Pendent Sprinklers must be installed in accordance with this section.

General Instructions
Do not install any bulb type sprinkler if the bulb is cracked or there is a loss of liquid from the bulb. With the sprinkler held horizontally, a small air bubble should be present. The diameter of the air bubble is approximately 1/16 in. (1,6 mm) for the 135°F (57°C) and 3/32 in. (2,4 mm) for the 286°F (141°C) temperature ratings. A leak-tight 1/2 in. NPT sprinkler joint should be obtained by applying a minimum-to-maximum torque of 7 ft-lb to 14 ft-lb (9,5 N·m to 19,0 N·m). A leak tight 3/4 in. NPT sprinkler joint should be obtained with a torque of 10 ft-lb to 20 ft-lb (13,4 N·m to 26,8 N·m). Higher levels of torque can distort the sprinkler inlet and cause leakage or impairment of the sprinkler. Do not attempt to compensate for insufficient adjustment in the escutcheon plate by under or over-tightening the sprinkler. Re-adjust the position of the sprinkler fitting to suit.

Series TY-FRB Upright and Pendent Sprinklers
The Series TY-FRB Upright and Pendent Sprinklers must be installed in accordance with the following instructions:

Step 1. Install pendent sprinklers in the pendent position. Install upright sprinklers in the upright position.

Step 2. With pipe thread sealant applied to the pipe threads, hand-tighten the sprinkler into the sprinkler fitting.

Step 3. Tighten the sprinkler into the sprinkler fitting using only the W-Type 6 Sprinkler Wrench as shown in Figure 14. Apply the sprinkler wrench to the sprinkler wrench flats as shown in Figure 1 to Figure 5.

Series TY-FRB Recessed Pendent Sprinklers
The Series TY-FRB Recessed Pendent Sprinklers must be installed in accordance with the following instructions:

Step 1. After installing the Style 10, 20, 30, or 40 Mounting Plate, as applicable, over the sprinkler threads and with pipe-thread sealant applied to the pipe threads, hand-tighten the sprinkler into the sprinkler fitting.

Step 2. Tighten the sprinkler into the sprinkler fitting using only the W-Type 7 Recessed Sprinkler Wrench as shown in Figure 15. Apply the sprinkler wrench to the sprinkler wrench flats as shown in Figure 1 to 4.

Step 3. After the ceiling is installed or the finish coat is applied, slide on the Style 10, 20, 30, or 40 closure over the Series TY-FRB Recessed Pendent Sprinkler and push the closure over the mounting plate until its flange comes in contact with the ceiling.

Care and Maintenance

The TYCO Series TY-FRB 2.8, 4.2, 5.6, and 8.0 K-factor Upright, Pendent, and Recessed Pendent Sprinklers must be maintained and serviced in accordance with this section. Before closing a fire protection system main control valve for maintenance work on the fire protection system that it controls, obtain permission to shut down the affected fire protection systems from the proper authorities and notify all personnel who may be affected by this action.

Absence of the outer piece of an escutcheon, which is used to cover a clearance hole, can delay sprinkler operation in a fire situation.

Sprinklers which are found to be leaking or exhibiting visible signs of corrosion must be replaced.

Automatic sprinklers must never be painted, plated, coated, or otherwise altered after leaving the factory. Modified sprinklers must be replaced. Sprinklers that have been exposed to corrosive products of combustion, but have not operated, should be replaced if they cannot be completely cleaned by wiping the sprinkler with a cloth or by brushing it with a soft bristle brush.

Care must be taken to avoid damage to the sprinklers before, during, and after installation. Sprinklers damaged by dropping, striking, wrench twist/slippage, or the like, must be replaced. Also, replace any sprinkler that has a cracked bulb or that has lost liquid from its bulb. For more information, see Installation section.

The owner is responsible for the inspection, testing, and maintenance of their fire protection system and devices in compliance with this document, as well as with the applicable standards of the National Fire Protection Association such as NFPA 25, in addition to the standards of any other authorities having jurisdiction. Contact the installing contractor or sprinkler manufacturer regarding any questions.

Automatic sprinkler systems are recommended to be inspected, tested, and maintained by a qualified Inspection Service in accordance with local requirements and/or national codes.

Care must be exercised to avoid damage to the sprinklers before, during, and after installation. Sprinklers damaged by dropping, striking, wrench twist/slippage, or the like, must be replaced. Also, replace any sprinkler that has a cracked bulb or that has lost liquid from its bulb. For more information, see Installation section.

Initial and frequent visual inspections of random samples are recommended for corrosion-resistant sprinklers to verify the integrity of the corrosion-resistant material of construction. Thereafter, annual inspections according to NFPA 25 should suffice. Inspections of corrosion-resistant sprinklers are recommended at close range, instead of from the floor level per NFPA. Inspection at close range can better determine the exact sprinkler condition and the long-term integrity of the corrosion-resistant material, which can be affected by the corrosive conditions present.

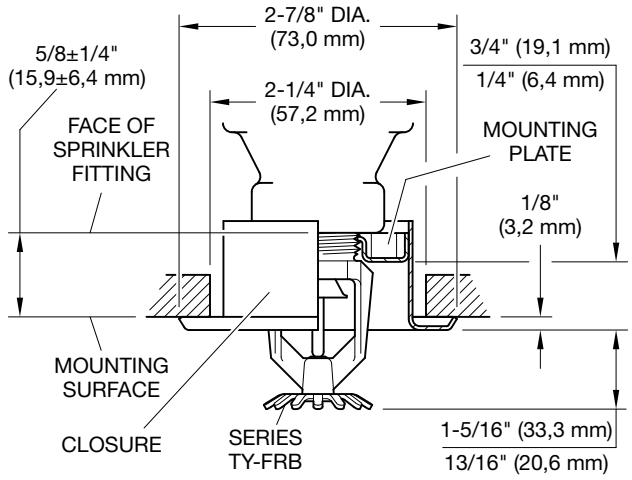

FIGURE 6
SERIES TY-FRB RECESSED PENDENT
WITH TWO-PIECE 3/4 INCH TOTAL ADJUSTMENT
STYLE 10 RECESSED ESCUTCHEON
2.8 K-FACTOR, 1/2 IN. NPT

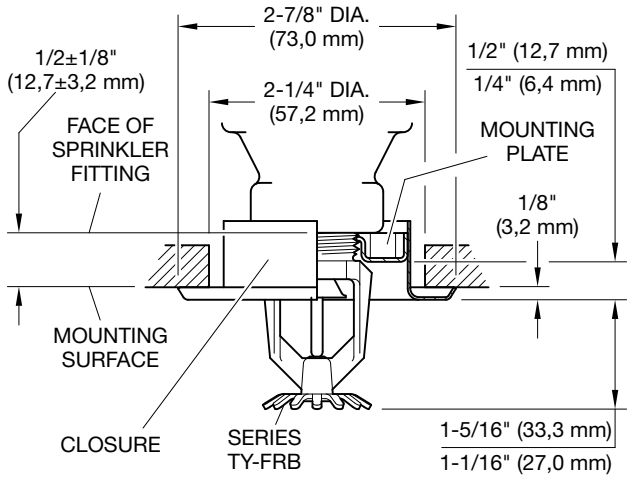

FIGURE 7
SERIES TY-FRB RECESSED PENDENT
WITH TWO-PIECE 1/2 INCH TOTAL ADJUSTMENT
STYLE 20 RECESSED ESCUTCHEON
2.8 K-FACTOR, 1/2 IN. NPT

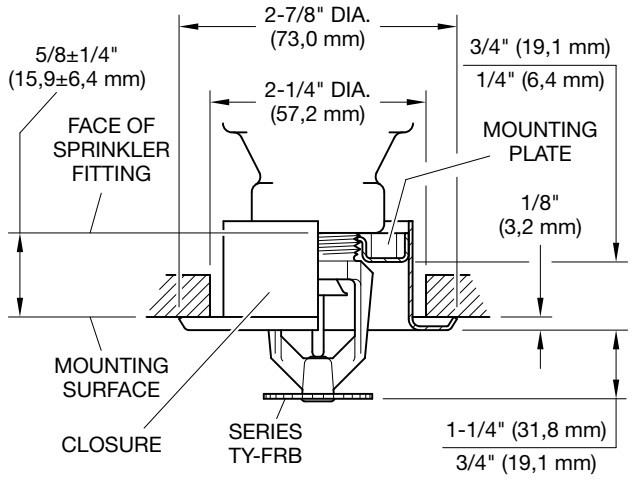

FIGURE 8
SERIES TY-FRB RECESSED PENDENT
WITH TWO-PIECE 3/4 INCH TOTAL ADJUSTMENT
STYLE 10 RECESSED ESCUTCHEON
4.2 K-FACTOR, 1/2 IN. NPT

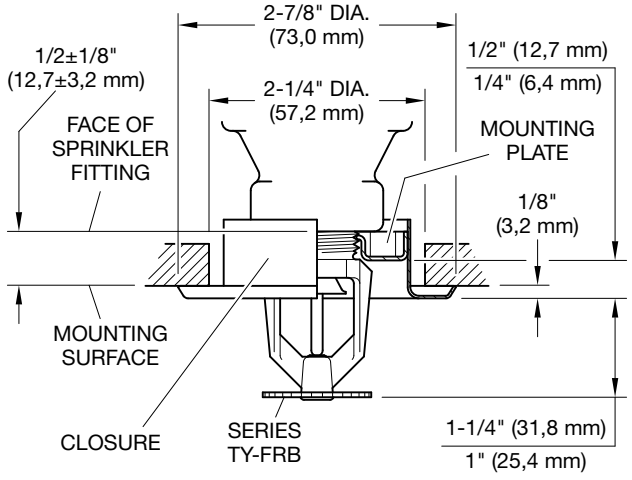

FIGURE 9
SERIES TY-FRB RECESSED PENDENT
WITH TWO-PIECE 1/2 INCH TOTAL ADJUSTMENT
STYLE 20 RECESSED ESCUTCHEON
4.2 K-FACTOR, 1/2 IN. NPT

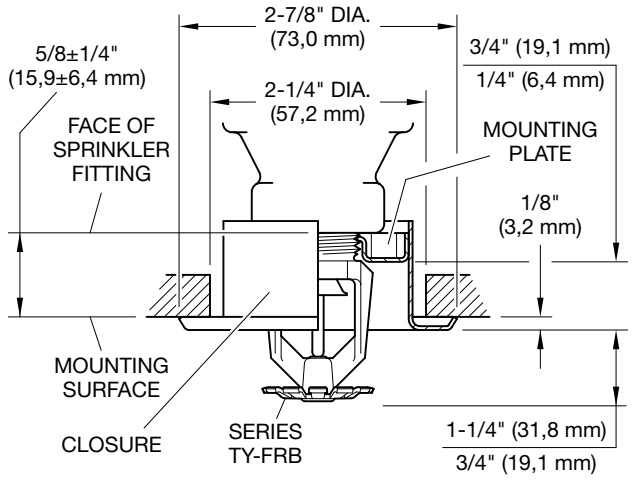

FIGURE 10
SERIES TY-FRB RECESSED PENDENT
WITH TWO-PIECE 3/4 INCH TOTAL ADJUSTMENT
STYLE 10 RECESSED ESCUTCHEON
5.6 K-FACTOR, 1/2 IN. NPT

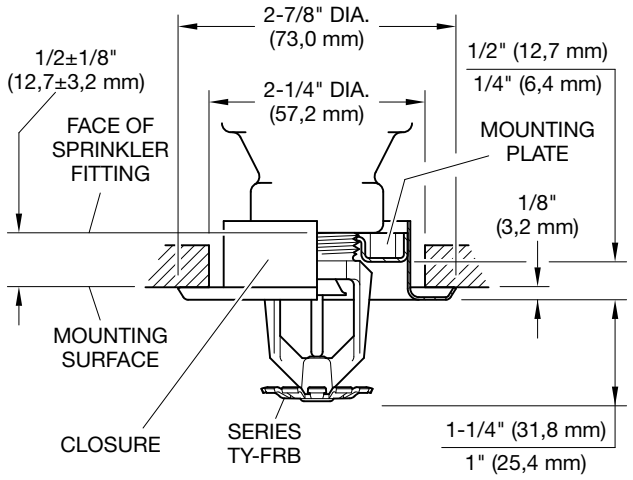

FIGURE 11
SERIES TY-FRB RECESSED PENDENT
WITH TWO-PIECE 1/2 INCH TOTAL ADJUSTMENT
STYLE 20 RECESSED ESCUTCHEON
5.6 K-FACTOR, 1/2 IN. NPT

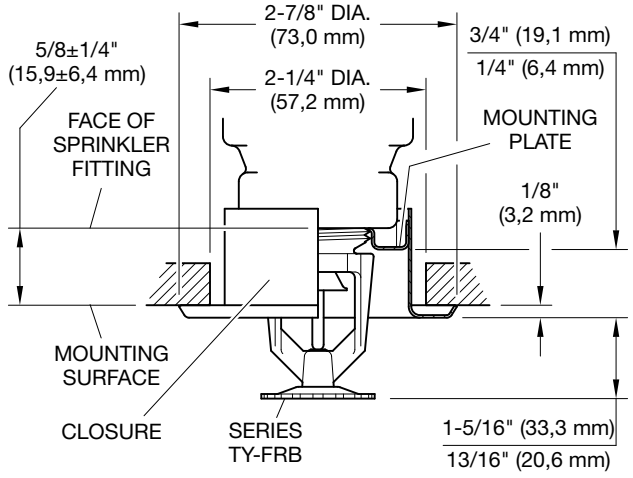

FIGURE 12
SERIES TY-FRB RECESSED PENDENT
WITH TWO-PIECE 3/4 INCH TOTAL ADJUSTMENT
STYLE 40 RECESSED ESCUTCHEON
8.0 K-FACTOR, 3/4 IN. NPT

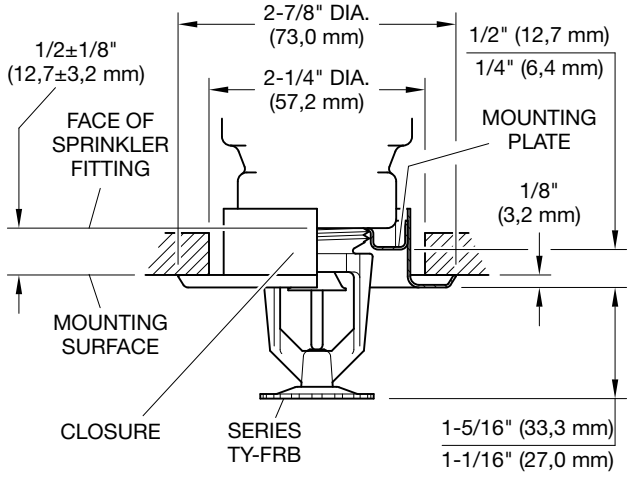

FIGURE 13
SERIES TY-FRB RECESSED PENDENT
WITH TWO-PIECE 1/2 INCH TOTAL ADJUSTMENT
STYLE 30 RECESSED ESCUTCHEON
8.0 K-FACTOR, 3/4 IN. NPT

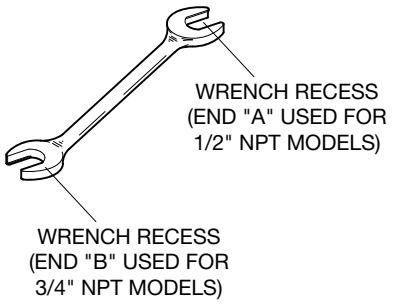

FIGURE 14
W-TYPE 6 SPRINKLER
WRENCH

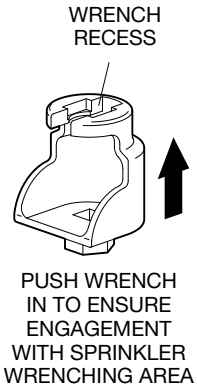

FIGURE 15
W-TYPE 7 RECESSED
SPRINKLER WRENCH

K-Factor	Type	Temperature	Bulb Liquid Color	Sprinkler Finish[4]		
				Natural Brass	Chrome Plated	Polyester[c]
2.8 1/2 in. NPT	Pendent (TY1231)	135°F (57°C)	Orange	1, 2, 3		
		155°F (68°C)	Red			
		175°F (79°C)	Yellow			
		200°F (93°C)	Green			
		286°F (141°C)	Blue			
	Upright (TY1131)	135°F (57°C)	Orange			
		155°F (68°C)	Red			
		175°F (79°C)	Yellow			
		200°F (93°C)	Green			
		286°F (141°C)	Blue			
	Recessed Pendent (TY1231)[a] Figure 6	135°F (57°C)	Orange	1, 2		
		155°F (68°C)	Red			
		175°F (79°C)	Yellow			
		200°F (93°C)	Green			
	Recessed Pendent (TY1231)[b] Figure 7	135°F (57°C)	Orange			
		155°F (68°C)	Red			
		175°F (79°C)	Yellow			
		200°F (93°C)	Green			

NOTES
a. Installed with Style 10 (1/2 in. NPT) or Style 40 (3/4 in. NPT) 3/4 in. Total Adjustment Recessed Escutcheon, as applicable.
b. Installed with Style 20 (1/2 in. NPT) or Style 30 (3/4 in. NPT) 1/2 in. Total Adjustment Recessed Escutcheon, as applicable.
c. Frame and Deflector only.
1. Listed by Underwriters Laboratories, Inc., (UL) as Quick Response Sprinklers.
2. Listed by Underwriters Laboratories, Inc., for use in Canada (C-UL) as Quick Response Sprinklers.
3. Approved by Factory Mutual Research Corporation (FM) as Quick Response Sprinklers.
4. Where Polyester Coated Sprinklers are noted to be UL and C-UL Listed, the sprinklers are UL and C-UL Listed, the sprinklers are UL and C-UL Listed as corrosion-resistant sprinklers.

TABLE A
LABORATORY LISTINGS AND APPROVALS FOR
2.8 K-FACTOR SPRINKLERS

K-Factor	Type	Temperature	Bulb Liquid Color	Sprinkler Finish[3]		
				Natural Brass	Chrome Plated	Polyester[c]
4.2 1/2 in. NPT	Pendent (TY2231)	135°F (57°C)	Orange	1, 2		
		155°F (68°C)	Red			
		175°F (79°C)	Yellow			
		200°F (93°C)	Green			
		286°F (141°C)	Blue			
	Upright (TY2131)	135°F (57°C)	Orange			
		155°F (68°C)	Red			
		175°F (79°C)	Yellow			
		200°F (93°C)	Green			
		286°F (141°C)	Blue			
	Recessed Pendent (TY2231)[a] Figure 8	135°F (57°C)	Orange			
		155°F (68°C)	Red			
		175°F (79°C)	Yellow			
		200°F (93°C)	Green			
	Recessed Pendent (TY2231)[b] Figure 9	135°F (57°C)	Orange			
		155°F (68°C)	Red			
		175°F (79°C)	Yellow			
		200°F (93°C)	Green			

NOTES
a. Installed with Style 10 (1/2 in. NPT) or Style 40 (3/4 in. NPT) 3/4 in. Total Adjustment Recessed Escutcheon, as applicable.
b. Installed with Style 20 (1/2 in. NPT) or Style 30 (3/4 in. NPT) 1/2 in. Total Adjustment Recessed Escutcheon, as applicable.
c. Frame and Deflector only.
1. Listed by Underwriters Laboratories, Inc., (UL) as Quick Response Sprinklers.
2. Listed by Underwriters Laboratories, Inc., for use in Canada (C-UL) as Quick Response Sprinklers.
3. Where Polyester Coated Sprinklers are noted to be UL and C-UL Listed, the sprinklers are UL and C-UL Listed, the sprinklers are UL and C-UL Listed as corrosion-resistant sprinklers.

TABLE B
LABORATORY LISTINGS AND APPROVALS FOR
4.2 K-FACTOR SPRINKLERS

K-Factor	Type	Temperature	Bulb Liquid Color	Sprinkler Finish[4]		
				Natural Brass	Chrome Plated	Polyester[c]
5.6 1/2 in. NPT	Pendent (TY3231)	135°F (57°C)	Orange	1, 2, 3		
		155°F (68°C)	Red			
		175°F (79°C)	Yellow			
		200°F (93°C)	Green			
		286°F (141°C)	Blue			
	Upright (TY3131)	135°F (57°C)	Orange	1, 2, 3		
		155°F (68°C)	Red			
		175°F (79°C)	Yellow			
		200°F (93°C)	Green			
		286°F (141°C)	Blue			
	Recessed Pendent (TY3231)[a] Figure 10	135°F (57°C)	Orange	1, 2		
		155°F (68°C)	Red			
		175°F (79°C)	Yellow			
		200°F (93°C)	Green			
		286°F (141°C)	Blue			
	Recessed Pendent (TY3231)[b] Figure 11	135°F (57°C)	Orange	1, 2, 3		
		155°F (68°C)	Red			
		175°F (79°C)	Yellow			
		200°F (93°C)	Green			
		286°F (141°C)	Blue			

NOTES
a. Installed with Style 10 (1/2 in. NPT) or Style 40 (3/4 in. NPT) 3/4 in. Total Adjustment Recessed Escutcheon, as applicable.
b. Installed with Style 20 (1/2 in. NPT) or Style 30 (3/4 in. NPT) 1/2 in. Total Adjustment Recessed Escutcheon, as applicable.
c. Frame and Deflector only.
1. Listed by Underwriters Laboratories, Inc., (UL) as Quick Response Sprinklers.
2. Listed by Underwriters Laboratories, Inc., for use in Canada (C-UL) as Quick Response Sprinklers.
3. Approved by Factory Mutual Research Corporation (FM) as Quick Response Sprinklers.
4. Where Polyester Coated Sprinklers are noted to be UL and C-UL Listed, the sprinklers are UL and C-UL Listed as Corrosion-Resistant Sprinklers.

TABLE C
LABORATORY LISTINGS AND APPROVALS FOR
5.6 K-FACTOR SPRINKLERS

K-Factor	Type	Temperature	Bulb Liquid Color	Sprinkler Finish[7]		
				Natural Brass	Chrome Plated	Polyester[c]
8.0 3/4 in. NPT	Pendent (TY4231)	135°F (57°C)	Orange	1, 2, 3, 4, 5, 6		
		155°F (68°C)	Red			
		175°F (79°C)	Yellow			
		200°F (93°C)	Green			
		286°F (141°C)	Blue			
	Upright (TY4131)	135°F (57°C)	Orange			
		155°F (68°C)	Red			
		175°F (79°C)	Yellow			
		200°F (93°C)	Green			
		286°F (141°C)	Blue			
	Recessed Pendent (TY4231)[a] Figure 12	135°F (57°C)	Orange	1, 2		
		155°F (68°C)	Red			
		175°F (79°C)	Yellow			
		200°F (93°C)	Green			
		286°F (141°C)	Blue			
	Recessed Pendent (TY4231)[b] Figure 13	135°F (57°C)	Orange	1, 2, 3		
		155°F (68°C)	Red			
		175°F (79°C)	Yellow			
		200°F (93°C)	Green			
		286°F (141°C)	Blue			
8.0 1/2 in. NPT	Pendent (TY4931)	135°F (57°C)	Orange	1, 2, 4, 5		
		155°F (68°C)	Red			
		175°F (79°C)	Yellow			
		200°F (93°C)	Green			
		286°F (141°C)	Blue			
	Upright (TY4831)	135°F (57°C)	Orange			
		155°F (68°C)	Red			
		175°F (79°C)	Yellow			
		200°F (93°C)	Green			
		286°F (141°C)	Blue			

NOTES

a. Installed with Style 10 (1/2 in. NPT) or Style 40 (3/4 in. NPT) 3/4 in. Total Adjustment Recessed Escutcheon, as applicable.
b. Installed with Style 20 (1/2 in. NPT) or Style 30 (3/4 in. NPT) 1/2 in. Total Adjustment Recessed Escutcheon, as applicable.
c. Frame and Deflector only.
1. Listed by Underwriters Laboratories, Inc., (UL) as Quick Response Sprinklers.
2. Listed by Underwriters Laboratories, Inc., for use in Canada (C-UL) as Quick Response Sprinklers.
3. Approved by Factory Mutual Research Corporation (FM) as Quick Response Sprinklers.
4. Approved by the Loss Prevention Certification Board (LPCB Ref. No. 007k/04) as Quick Response Sprinklers. However, LPCB does not rate the thermal sensitivity of recessed sprinklers.
5. VdS Approved (For details, contact Johnson Controls, Enschede, Netherlands, Tel. 31-53-428-4444/Fax 31-53-428-3377.)
6. Approved by the Loss Prevention Certification Board (LPCB Ref. No. 094a/06) as Quick Response Sprinklers.
7. Where Polyester Coated Sprinklers are noted to be UL and C-UL Listed, the sprinklers are UL and C-UL Listed as Corrosion-Resistant Sprinklers.

TABLE D
LABORATORY LISTINGS AND APPROVALS FOR
8.0 K-FACTOR SPRINKLERS

K-Factor	Type	Sprinkler Finish			
		Natural Brass	Chrome Plated	Polyester	Lead Coated
2.8 1/2 in. NPT	Pendent (TY1231) and Upright (TY1131)	175 psi (12,1 bar)			N/A[2]
	Recessed Pendent (TY1231)				
4.2 1/2 in. NPT	Pendent (TY2231) and Upright (TY2131)	175 psi (12,1 bar)			N/A
	Recessed Pendent (TY2231)				
5.6 1/2 in. NPT	Pendent (TY3231) and Upright (TY3131)	250 psi (17,2 bar) or 175 psi (12,1 bar)[1]			
	Recessed Pendent (TY3231)				
8.0 3/4 in. NPT	Pendent (TY4231) and Upright (TY4131)	175 psi (12,1 bar)			175 psi (12,1 bar)
	Recessed Pendent(TY4231)				N/A
8.0 1/2 in. NPT	Pendent (TY4931) and Upright (TY4831)	175 psi (12,1 bar)			175 psi (12,1 bar)

NOTES
1. The maximum working pressure of 250 psi (17,2 bar) only applies to the Listing by Underwriters Laboratories Inc. (UL); the Listing by Underwriters Laboratories, Inc. for use in Canada (C-UL).
2. Not available (N/A).

TABLE E
MAXIMUM WORKING PRESSURE

P/N 57XXXXXXX

		SIN
330	2.8K UPRIGHT (1/2 in. NPT)	TY1131
331	2.8K PENDENT (1/2 in. NPT)	TY1231
340	4.2K UPRIGHT (1/2 in. NPT)	TY2131
341	4.2K PENDENT (1/2 in. NPT)	TY2231
370	5.6K UPRIGHT (1/2 in. NPT)	TY3131
371	5.6K PENDENT (1/2 in. NPT)	TY3231
390	8.0K UPRIGHT (3/4 in. NPT)	TY4131
391	8.0K PENDENT (3/4 in. NPT)	TY4231
360	8.0K UPRIGHT (1/2 in. NPT)	TY4831
361	8.0K PENDENT (1/2 in. NPT)	TY4931

	SPRINKLER FINISH
1	NATURAL BRASS[1]
3	PURE WHITE POLYESTER (RAL9010)[2]
4	SIGNAL WHITE POLYESTER (RAL9003)[3]
5	JET BLACK POLYESTER (RAL9005)[4]
9	CHROME PLATED[5]

	TEMPERATURE RATINGS
135	135°F (57°C)
155	155°F (68°C)
175	175°F (79°C)
200	200°F (93°C)
286	286°F (141°C)

NOTES

1. Natural Brass finish not available for: TY1131 and TY1231 2.8K sprinklers in all temperature ratings; TY2231 4.2K pendent sprinkler in 286°F (141°C) temperature rating; TY3131 5.6K upright sprinkler in 135°F (57°C) temperature rating
2. Pure White finish available for Eastern Hemisphere sales only; Not available for TY3231 5.6K pendent sprinkler in 200°F (93°C) temperature rating
3. Signal White finish not available for: TY1131 2.8K upright sprinkler in 155°F (68°C), 175°F (79°C), 200°F (93°C), and 286°F (141°C) temperature ratings; TY1231 2.8K pendent sprinkler in all temperature ratings; TY3131 5.6K upright sprinkler in 175°F (79°C), 200°F (93°C), and 286°F (141°C) temperature ratings; TY3231 5.6K pendent sprinkler in 175°F (79°C) temperature rating
4. Jet Black finish available for only TY1231 2.8K pendent sprinkler in 200°F (93°C) temperature rating; requires longer lead time to manufacture
5. Chrome Plated finish not available for: TY1131 and TY1231 2.8K sprinklers in all temperature ratings; TY3231 5.6K pendent sprinkler in 135°F (57°C) temperature rating

TABLE F
SERIES TY-FRB PENDENT AND UPRIGHT SPRINKLERS
PART NUMBER SELECTION

Limited Warranty

For warranty terms and conditions, visit www.tyco-fire.com.

Ordering Procedure

Contact your local distributor for availability. When placing an order, indicate the full product name and Part Number (P/N).

Sprinkler Assemblies with NPT Thread Connections
Specify: Series TY-FRB (Specify SIN), (specify K-factor), (specify Pendent or Upright) Sprinkler (specify) temperature rating, (specify) finish or coating, P/N (specify from Table F)

Recessed Escutcheon
Specify: Style (10, 20, 30, or 40) Recessed Escutcheon with (specify*) finish, P/N (specify*)

* Refer to technical data sheet TFP770

Sprinkler Wrench
Specify: W-Type 6 Sprinkler Wrench, P/N 560006387

Specify: W-Type 7 Sprinkler Wrench, P/N 568504001

1467 Elmwood Avenue, Cranston, RI 02910 | Telephone +1-401-781-8220

© 2026 Johnson Controls. All rights reserved. All specifications and other information shown were current as of document revision date and are subject to change without notice.

NATIONAL FIRE PROTECTION ASSOCIATION and NFPA are registered trademarks of National Fire Protection Association;
TEFLON is a trademark of The Chemours Company FC, LLC

Johnson Controls

Fire Sprinkler Pipe

Schedule 10 and Schedule 40

Submittal Data Sheet

FM Approved and Fully Listed Sprinkler Pipe
Wheatland's Schedule 10 and Schedule 40 steel fire sprinkler pipe is FM Approved and UL, C-UL and FM Listed.

Approvals and Specifications
Both products meet or exceed the following standards:

- ASTM A135, Type E, Grade A (Schedule 10)
- ASTM A795, Type E, Grade A (Schedule 40)
- NFPA 13

Manufacturing Protocols
Schedule 10 and Schedule 40 are subjected to the toughest possible testing protocols to ensure the highest quality and long-lasting performance.

Finishes and Coatings
All Wheatland black steel fire sprinkler pipe up to 6" receives a proprietary mill coating to ensure a clean, corrosion-resistant surface that outperforms and outlasts standard lacquer coatings. This coating allows the pipe to be easily painted, without special preparation. Schedule 10 and Schedule 40 can be ordered in black, or with hot-dip galvanizing, to meet FM/UL requirements for dry systems that meet the zinc coating specifications of ASTM A795 or A53. All Wheatland galvanized material is also UL Listed.

Product Marking
Each length of Wheatland fire sprinkler pipe is continuously stenciled to show the manufacturer, type of pipe, grade, size and length. Barcoding is acceptable as a supplementary identification method.

SCHEDULE 10 SPECIFICATIONS

NPS	NOM OD		NOM ID		NOMINAL WALL		NOMINAL WEIGHT		UL	PIECES
	in.	mm	in.	mm	in.	mm	lbs./ft.	kg/m	CRR*	Lift
1¼	1.660	42.2	1.442	36.6	.109	2.77	1.81	2.69	7.3	61
1½	1.900	48.3	1.682	42.7	.109	2.77	2.09	3.11	5.8	61
2	2.375	60.3	2.157	54.8	.109	2.77	2.64	3.93	4.7	37
2½	2.875	73.0	2.635	66.9	.120	3.05	3.53	5.26	3.5	30
3	3.500	88.9	3.260	82.8	.120	3.05	4.34	6.46	2.6	19
4	4.500	114.3	4.260	108.2	.120	3.05	5.62	8.37	1.6	19
5	5.563	141.3	5.295	134.5	.134	3.40	7.78	11.58	1.5	13
6	6.625	168.3	6.357	161.5	.134	3.40	9.30	13.85	1.0	10
8	8.625	219.1	8.249	209.5	.188	4.78	16.96	25.26	2.1	7

** Calculated using Standard UL CRR formula, UL Fire Protection Directory, Category VIZY.*
** The CRR is a ratio value used to measure the ability of a pipe to withstand corrosion. Threaded Schedule 40 steel pipe is used as the benchmark (value of 1.0).*

SCHEDULE 40 SPECIFICATIONS

NPS	NOM OD		NOM ID		NOMINAL WALL		NOMINAL WEIGHT		UL	PIECES
	in.	mm	in.	mm	in.	mm	lbs./ft.	kg/m	CRR*	Lift
1	1.315	33.4	1.049	26.6	.133	3.38	1.68	2.50	1.00	70
1¼	1.660	42.2	1.380	35.1	.140	3.56	2.27	3.39	1.00	51
1½	1.900	48.3	1.610	40.9	.145	3.68	2.72	4.05	1.00	44
2	2.375	60.3	2.067	52.5	.154	3.91	3.66	5.45	1.00	30

** Calculated using Standard UL CRR formula, UL Fire Protection Directory, Category VIZY.*
** The CRR is a ratio value used to measure the ability of a pipe to withstand corrosion. Threaded Schedule 40 steel pipe is used as the benchmark (value of 1.0).*

FM APPROVED

SUBMITTAL INFORMATION

PROJECT: _____ CONTRACTOR: _____ DATE: _____

ENGINEER: _____ SPECIFICATION REFERENCE: _____ SYSTEM TYPE: _____

LOCATIONS: _____ COMMENTS: _____

☐ BLACK ☐ HOT-DIP GALVANIZED

Wheatland Tube 700 South Dock Street Sharon, PA 16146
P 800.257.8182 | **F** 724.346.7260 | info@wheatland.com | wheatland.com

Wheatland Tube
JMC STEEL GROUP

POTTER
The Symbol of Protection

BELLS
PBA-AC & MBA-DC

UL, ULC, and FM Approved
Sizes Available: 6" (150mm), 8" (200mm) and 10" (250mm)
Voltages Available: 24VAC
120VAC
12VDC (10.2 to 15.6) Polarized
24VDC (20.4 to 31.2) Polarized
Service Use: Fire Alarm
General Signaling
Burglar Alarm
Environment: Indoor or outdoor use (See Note 1)
-40° to 150°F (-40° to 66°C)
(Outdoor use requires weatherproof backbox.)
Termination: AC Bells - 4 No. 18 AWG stranded wires
DC Bells - Terminal strip
Finish: Red powder coating
Optional: Model BBK-1 weatherproof backbox
Model BBX-1 deep weatherproof backbox

These vibrating type bells are designed for use as fire, burglar or general signaling devices. They have low power consumption and high decibel ratings. The unit mounts on a standard 4" (101mm) square electrical box for indoor use or on a model BBK-1 weatherproof backbox or BBX-1 deep weatherproof backbox for outdoor applications. Weatherproof backbox model BBK-1, Stock No. 1500001.

Notes:
1. Minimum dB ratings are calculated from integrated sound pressure measurements made at Underwriters Laboratories as specified in UL Standard 464. UL temperature range is -30° to 150°F (-34° to 66°C).
2. Typical dB ratings are calculated from measurements made with a conventional sound level meter and are indicative of output levels in an actual installation.
3. ULC only applies to MBA DC bells.

Size inches (mm)	Voltage	Model Number	Stock Number	Current (Max.)	Typical dB at 10 ft. (3m) (2)	Minimum dB at 10 ft. (3m) (1)
6 (150)	12VDC	MBA126	1750070	.12A	85	76
8 (200)	12VDC	MBA128	1750080	.12A	90	77
10 (250)	12VDC	MBA1210	1750060	.12A	92	78
6 (150)	24VDC	MBA246	1750100	.06A	87	77
8 (200)	24VDC	MBA248	1750110	.06A	91	79
10 (250)	24VDC	MBA2410	1750090	.06A	94	80
6 (150)	24VAC	PBA246	1806024*	.17A	91	78
8 (200)	24VAC	PBA248	1808024*	.17A	94	77
10 (250)	24VAC	PBA2410	1810024*	.17A	94	78
6 (150)	120VAC	PBA1206	1806120*	.05A	92	83
8 (200)	120VAC	PBA1208	1808120*	.05A	99	84
10 (250)	120VAC	PBA12010	1810120*	.05A	99	86

All DC bells are polarized and have built-in transient protection.
* Does not have ULC listing.

WARNING

In outdoor or wet installations, bell must be mounted with weatherproof backbox, BBK-1 or BBX-1. Standard electrical boxes will not provide a weatherproof enclosure. If the bell and/or assembly is exposed to moisture, it may fail or create an electrical hazard.

Potter Electric Signal Company, LLC • 2081 Craig Road, St. Louis, MO, 63146-4161 • Phone: 800-325-3936/Canada 888-882-1833 • www.pottersignal.com

Bells Dimensions Inches (mm)
Fig. 1

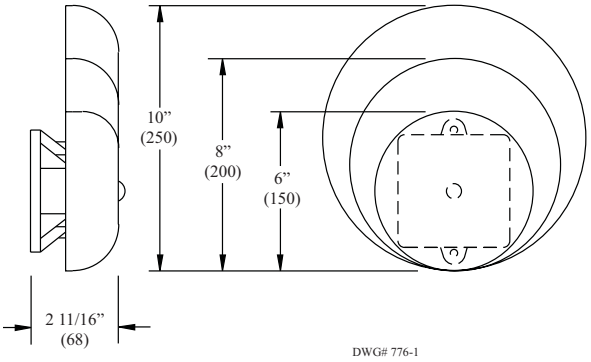

Weatherproof Backbox Dimensions Inches (mm)
Fig. 2

Box has one threaded 1/2" conduit entrance

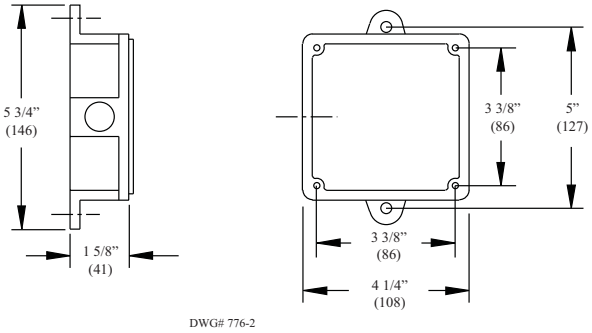

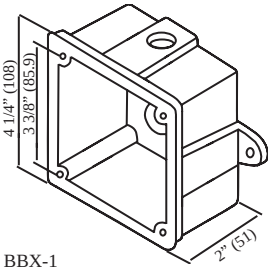

BBX-1

Wiring (rear view)
Fig. 3

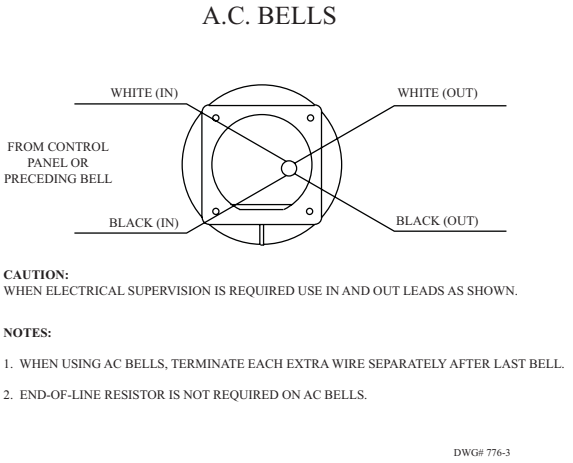

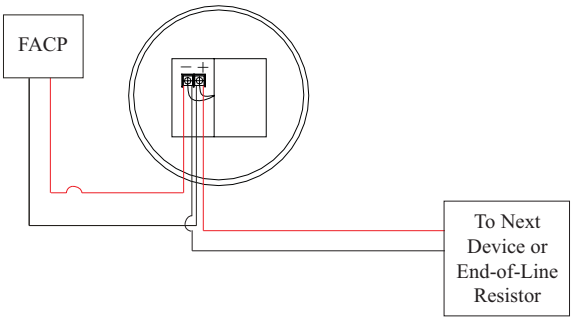

Installation

1. The bell shall be installed in accordance with NFPA 13, 72, or local AHJ. The top of the device shall be no less than 90" AFF and not less than 6" below the ceiling.
2. Remove the gong.
3. Connect wiring (see Fig. 3).
4. Mount bell mechanism to backbox (bell mechanism must be mounted with the striker pointing down).
5. Reinstall the gong (be sure that the gong positioning pin, in the mechanism housing, is in the hole in the gong).
6. Test all bells for proper operation and observe that they can be heard where required (bells must be heard in all areas as designated by the authority having jurisdiction).

⚠ WARNING

Failure to install striker down will prevent bell from operating.

VSR

VANE TYPE WATERFLOW ALARM SWITCH WITH RETARD

UL, CUL and CSFM Listed, FM Approved, LPCB Approved, For CE Marked (EN12259-5) / VdS Approved model use VSR-EU

Service Pressure: 450 PSI (31 BAR) - UL

Flow Sensitivity Range for Signal:
4-10 GPM (15-38 LPM) - UL

Maximum Surge: 18 FPS (5.5 m/s)

Contact Ratings: Two sets of SPDT (Form C)
10.0 Amps at 125/250VAC
2.0 Amps at 30VDC Resistive
10 mAmps min. at 24VDC

Conduit Entrances: Two knockouts provided for 1/2" conduit. Individual switch compartments suitable for dissimilar voltages.

Environmental Specifications:

- NEMA 4/IP54 Rated Enclosure suitable for indoor or outdoor use with factory installed gasket and die-cast housing when used with appropriate conduit fitting.
- Temperature Range: 40°F - 120°F, (4.5°C - 49°C) - UL
- Non-corrosive sleeve factory installed in saddle.

Service Use:

Automatic Sprinkler	NFPA-13
One or two family dwelling	NFPA-13D
Residential occupancy up to four stories	NFPA-13R
National Fire Alarm Code	NFPA-72

Specifications subject to change without notice.

Ordering Information			
Nominal Pipe Size		Model	Part Number
2"	DN50	VSR-2	1144402
2 1/2"	DN65	VSR-2 1/2	1144425
3"	DN80	VSR-3	1144403
3 1/2"	-	VSR-3 1/2	1144435
4"	DN100	VSR-4	1144404
5"	-	VSR-5	1144405
6"	DN150	VSR-6	1144406
8"	DN200	VSR-8	1144408

Optional: Cover Tamper Switch Kit, stock no. 0090148
Replaceable Components: Retard/Switch Assembly, stock no. 1029030

⚠ WARNING

- Installation must be performed by qualified personnel and in accordance with all national and local codes and ordinances.
- Shock hazard. Disconnect power source before servicing. Serious injury or death could result.
- Risk of explosion. Not for use in hazardous locations. Serious injury or death could result.

CAUTION

Waterflow switches that are monitoring wet pipe sprinkler systems shall not be used as the sole initiating device to discharge AFFF, deluge, or chemical suppression systems. Waterflow switches used for this application may result in unintended discharges caused by surges, trapped air, or short retard times.

General Information

The Model VSR is a vane type waterflow switch for use on wet sprinkler systems. It is UL Listed and FM Approved for use on steel pipe; schedules 10 through 40, sizes 2" thru 8" (50 mm thru 200 mm). LPC approved sizes are 2" thru 8" (50 mm thru 200 mm). See Ordering Information chart.

The VSR may also be used as a sectional waterflow detector on large systems. The VSR contains two single pole, double throw, snap action switches and an adjustable, instantly recycling pneumatic retard. The switches are actuated when a flow of 10 GPM (38 LPM) or more occurs downstream of the device. The flow condition must exist for a period of time necessary to overcome the selected retard period.

Enclosure

The VSR switches and retard device are enclosed in a general purpose, die-cast housing. The cover is held in place with two tamper resistant screws which require a special key for removal. A field installable cover tamper switch is available as an option which may be used to indicate unauthorized removal of the cover. See bulletin number 5401103 for installation instructions of this switch.

Installation (see Fig. 1)

These devices may be mounted on horizontal or vertical pipe. On horizontal pipe they shall be installed on the top side of the pipe where they will be accessible. The device should not be installed within 6" (15 cm) of a fitting which changes the direction of the waterflow or within 24" (60 cm) of a valve or drain.

NOTE: Do not leave cover off for an extended period of time.

Drain the system and drill a hole in the pipe using a hole saw in a slow speed drill (see Fig. 1). Clean the inside pipe of all growth or other material for a distance equal to the pipe diameter on either side of the hole. Roll the vane so that it may be inserted into the hole; do not bend or crease it. Insert the vane so that the arrow on the saddle points in the direction of the waterflow. Take care not to damage the non-corrosive bushing in the saddle. The bushing should fit inside the hole in the pipe. Install the saddle strap and tighten nuts alternately to required torque (see the chart in Fig. 1). The vane must not rub the inside of the pipe or bind in any way.

⚠ CAUTION

Do not trim the paddle. Failure to follow these instructions may prevent the device from operating and will void the warranty.

Fig. 1

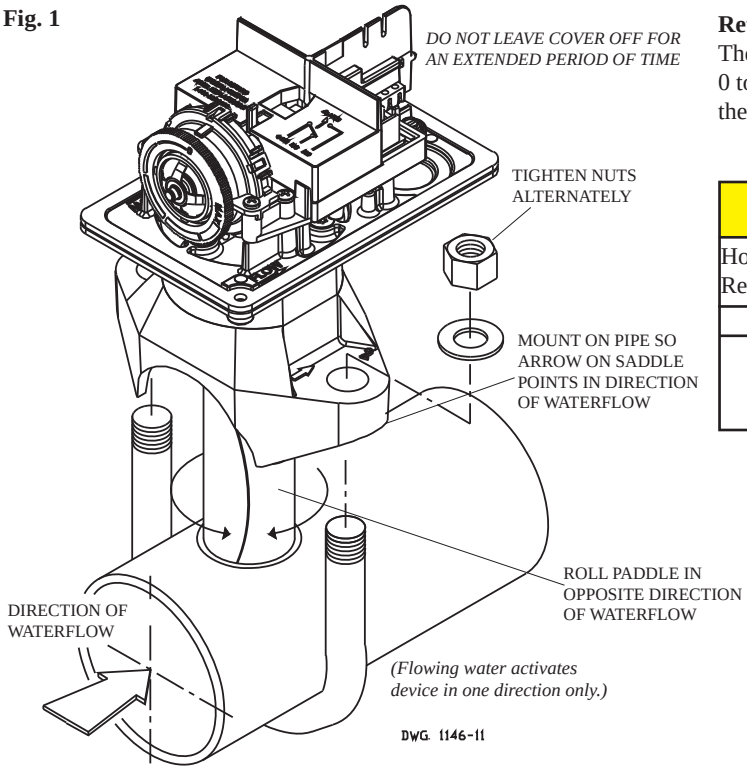

Retard Adjustment

The delay can be adjusted by rotating the retard adjustment knob from 0 to the max setting (60-90 seconds). The time delay should be set at the minimum required to prevent false alarms

CAUTION

Hole must be drilled perpendicular to the pipe and vertically centered. Refer to the Compatible Pipe/Installation Requirements chart for size.

Correct	Incorrect
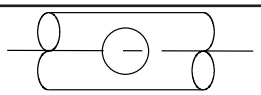	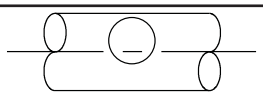

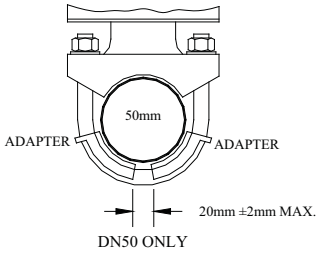

USE (2) 5180162 ADAPTERS AS SHOWN ABOVE

DWG# 1146-1F

Compatible Pipe/ Installation Requirements																
Model	Nominal Pipe Size		Nominal Pipe O.D.		Pipe Wall Thickness								Hole Size		U-Bolt Nuts Torque	
					Schedule 10 (UL)		Schedule 40 (UL)		BS-1387 (LPC)		DN (VDS)					
	inch	mm	inch	mm	inch	mm	inch	mm	inch	mm	inch	mm	inch	mm	ft-lb	n-m
VSR-2	2	DN50	2.375	60.3	0.109	2.77	0.154	3.91	0.142	3.6	0.091	2.3	1.25 + .125/-.062	33.0 ± 2.0	20	27
VSR-2 1/2	2.5	-	2.875	73.0	0.120	3.05	0.203	5.16	-	-	-	-				
VSR-2 1/2	-	DN65	3.000	76.1	-	-	-	-	0.142	3.6	0.102	2.6				
VSR-3	3	DN80	3.500	88.9	0.120	3.05	0.216	5.49	0.157	4.0	0.114	2.9	2.00 ± .125	50.8 ± 2.0		
VSR-3 1/2	3.5	-	4.000	101.6	0.120	3.05	0.226	5.74	-	-	-	-				
VSR-4	4	DN100	4.500	114.3	0.120	3.05	0.237	6.02	0.177	4.5	0.126	3.2				
VSR-5	5	-	5.563	141.3	0.134	3.40	0.258	6.55	-	-	-	-				
VSR-6	6	DN150	6.625	168.3	0.134	3.40	0.280	7.11	0.197	5.0	0.157	4.0				
VSR-8	8	DN200	8.625	219.1	0.148	3.76	0.322	8.18	0.248	6.3	0.177	4.5				

NOTE: For copper or plastic pipe use Model VSR-CF.

Fig. 2
To remove knockouts: Place screwdriver at inside edge of knockouts, not in the center.

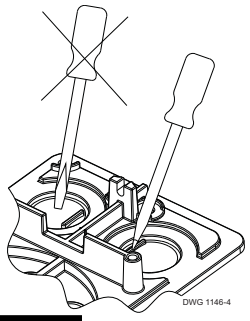

NOTICE
Do not drill into the base as this creates metal shavings which can create electrical hazards and damage the device. Drilling voids the warranty.

Fig. 3
Break out thin section of cover when wiring both switches from one conduit entrance.

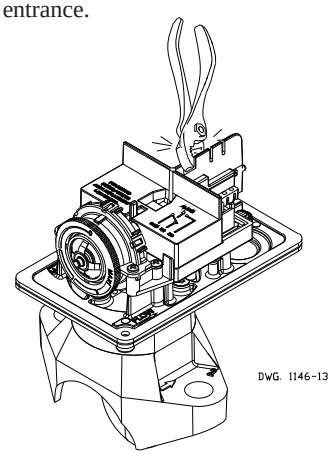

Fig. 4 Switch Terminal Connections Clamping Plate Terminal

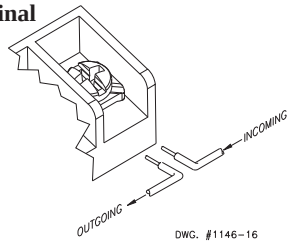

WARNING
An uninsulated section of a single conductor should not be looped around the terminal and serve as two separate connections. The wire must be severed, thereby providing supervision of the connection in the event that the wire become dislodged from under the terminal. Failure to sever the wire may render the device inoperable risking severe property damage and loss of life.

Do not strip wire beyond 3/8" of length or expose an uninsulated conductor beyond the edge of the terminal block. When using stranded wire, capture all strands under the clamping plate.

Fig. 5 Typical Electrical Connections

Notes:
1. The Model VSR has two switches, one can be used to operate a central station, proprietary or remote signaling unit, while the other contact is used to operate a local audible or visual annunciator.
2. A condition of LPC Approval of this product is that the electrical entry must be sealed to exclude moisture.
3. For supervised circuits, see "Switch Terminal Connections" drawing and warning note (Fig. 4).

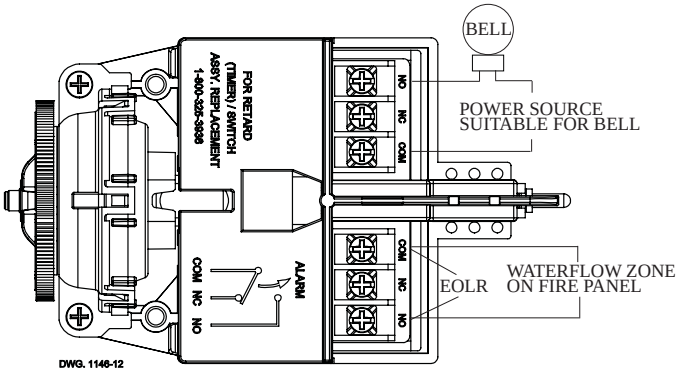

Testing
The frequency of inspection and testing for the Model VSR and its associated protective monitoring system shall be in accordance with applicable NFPA Codes and Standards and/or the authority having jurisdiction (manufacturer recommends quarterly or more frequently).

If provided, the inspector's test valve shall always be used for test purposes. If there are no provisions for testing the operation of the flow detection device on the system, application of the VSR is not recommended or advisable.
A minimum flow of 10 GPM (38 LPM) is required to activate this device.

NOTICE Advise the person responsible for testing of the fire protection system that this system must be tested in accordance with the testing instructions.

Fig. 7 Mounting Dimensions

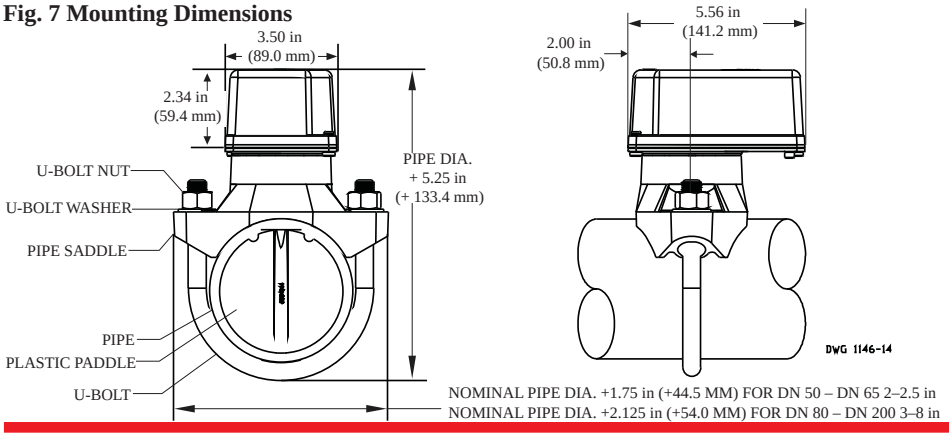

NOMINAL PIPE DIA. +1.75 in (+44.5 MM) FOR DN 50 – DN 65 2–2.5 in
NOMINAL PIPE DIA. +2.125 in (+54.0 MM) FOR DN 80 – DN 200 3–8 in

Fig. 8

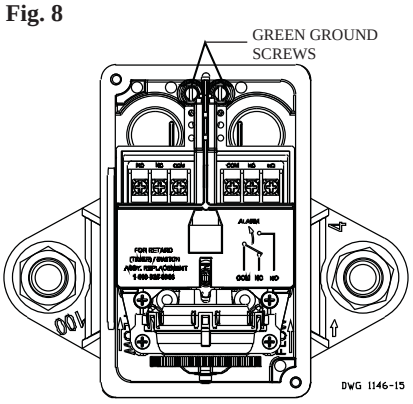

Maintenance

Inspect detectors monthly. If leaks are found, replace the detector. The VSR waterflow switch should provide years of trouble-free service. The retard and switch assembly are easily field replaceable. In the unlikely event that either component does not perform properly, please order replacement retard switch assembly stock #1029030 (see Fig. 6). There is no maintenance required, only periodic testing and inspection.

Retard/Switch Assembly Replacement (See Fig. 6)

NOTICE The Retard/Switch Assembly is field-replaceable without draining the system or removing the waterflow switch from the pipe

1. Make sure the fire alarm zone or circuit connected to the waterflow switch is bypassed or otherwise taken out of service.
2. Disconnect the power source for local bell (if applicable).
3. Identify and remove all wires from the waterflow switch.
4. Remove the (2) mounting screws holding retard/switch assembly to the base. **Do not** remove the (2) retard housing screws.
5. Remove the retard assembly by lifting it straight up over the tripstem.
6. Install the new retard assembly. Make sure the locating pins on the retard/switch assembly fit into the locating pin bosses on the base.
7. Re-install the (2) original mounting screws.
8. Reconnect all wires. Perform a flow test and place the system back in service.

Fig. 6

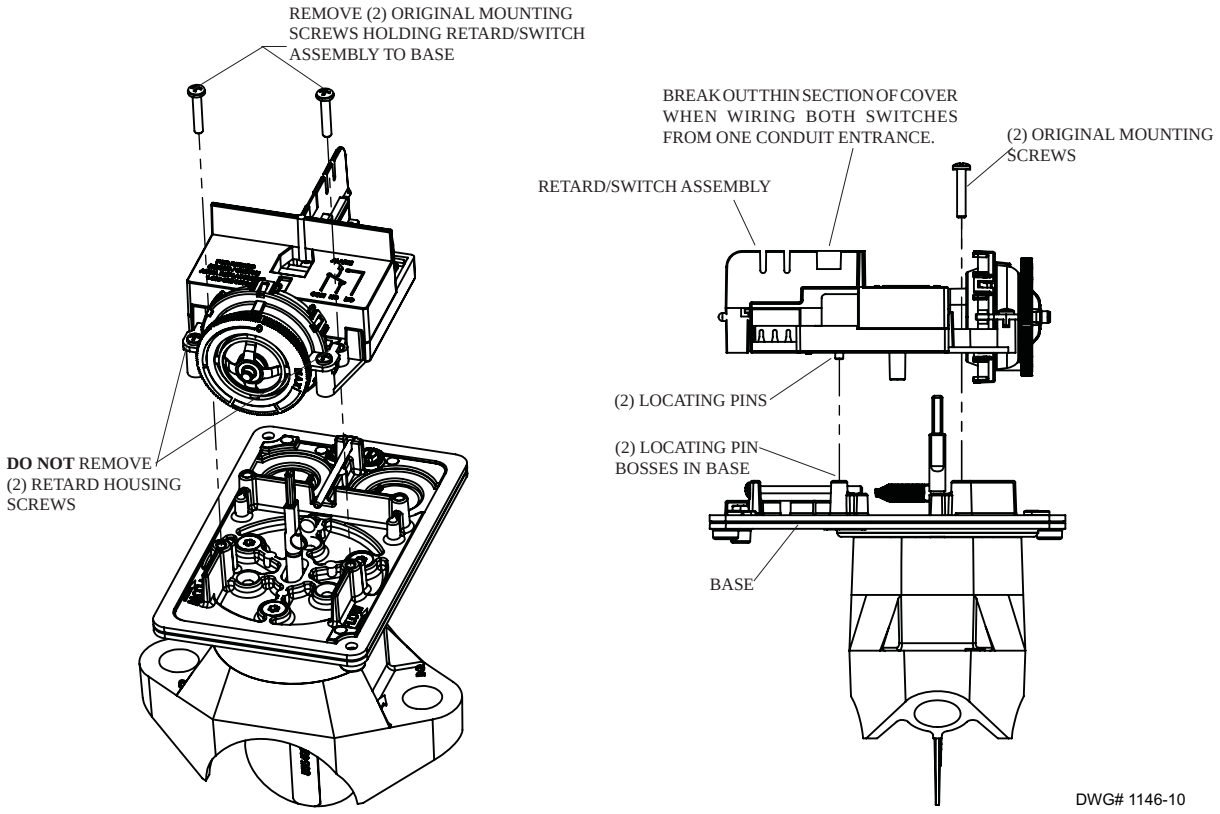

Removal of Waterflow Switch

- To prevent accidental water damage, all control valves should be shut tight and the system completely drained before waterflow detectors are removed or replaced.
- Turn off electrical power to the detector, then disconnect wiring.
- Loosen nuts and remove U-bolts.
- Gently lift the saddle far enough to get your fingers under it. With your fingers, roll the vane so it will fit through the hole while continuing to lift the waterflow detector saddle.
- Lift detector clear of pipe.

TOLCO Fig. 58 - threaded side beam bracket

Size Range: 3/8"-16 rod, pipe sizes 1/2" (15mm) thru 4" (100mm)

Material: Pre-Galvanized Steel

Function: Practical and economical bracket used to support piping from wood, concrete or steel beams.

Features: Unique design allows rod to be easily threaded into bracket. Offset design permits unlimited rod adjustment. Center mounting hole will accept 3/8" and 1/2" fastener bolts. Per NFPA 13: 1/2" (15mm) thru 2" (50mm) pipe requires 3/8" fastener, 2 1/2" (65mm) thru 4" (100mm) pipe requires 1/2" fastener.*

Approvals: Underwriters Laboratories Listed in the USA **(UL)** and Canada **(cUL)**, and Factory Mutual Engineering approved thru 4" (100mm) pipe.

Finish: Pre-Galvanized

Order By: Figure number and finish

***Note:** Additionally UL has listed the Fig. 58 with fasteners as shown in table below.

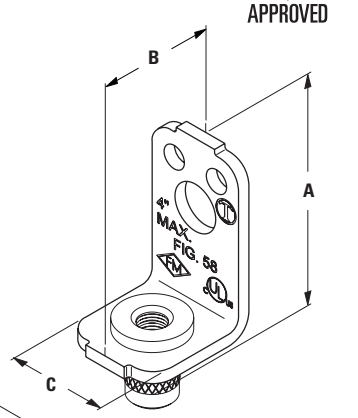

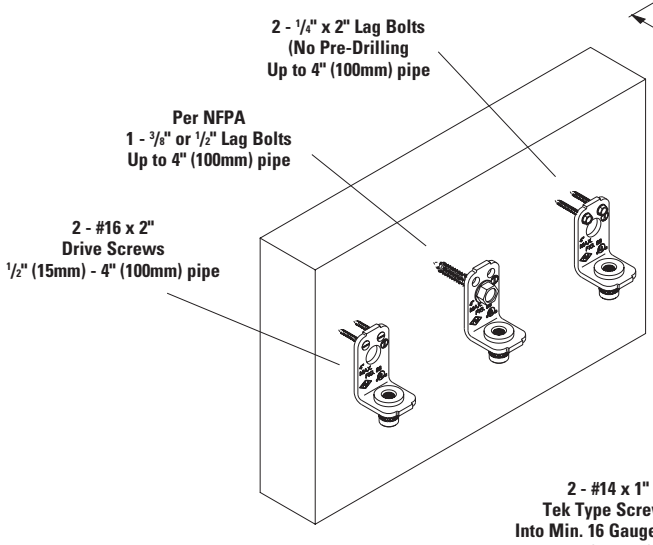

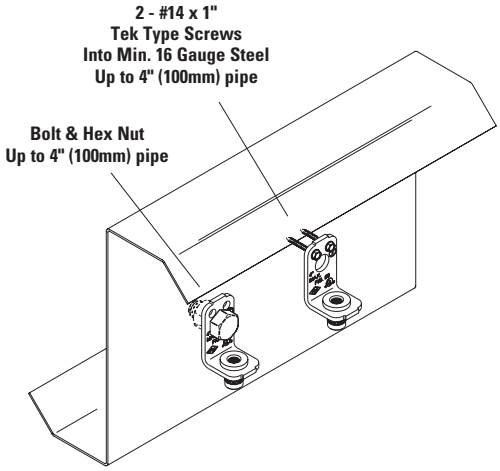

UL Listed Fastener Table

Pipe Size	Qty	Fastener Type	Material
2"	2	#16 x 2" Drive screws	Wood
2"	1	3/8" Lag bolt	Wood
2 1/2" - 4"	1	1/2" Lag bolt	Wood
3 1/2"	2	1/4" x 1 1/2" Lag bolts	Wood
4"	2	1/4" x 2" Lag bolts **	Wood
4"	2	1/4" x 1" Tek screws	Metal (15 gauge)
4"	2	1/4" x 1" Tek screws	Metal (16 gauge)

** No pre-drilling

Larger pipe sizes can be hung with reduced spacing.

Part No.	Pipe Size in.	(mm)	Rod Size	A in.	(mm)	B in.	(mm)	C in.	(mm)	Approx. Wt./100 Lbs.	(kg)
58	1/2" - 4"	(15 - 100)	3/8"-16	2 3/4"	(69.8)	1 1/2"	(38.1)	1 1/8"	(28.6)	14	(6.3

All dimensions in charts and on drawings are in inches. Dimensions shown in parentheses are in millimeters unless otherwise specified.

TOLCO Fig. 1CBS - Clevis Bolt Spacer

OPM

Size Range: Size 1" (25mm) thru 20" (500mm) clevis hanger

Material: Steel

Function: Used as a spacer at a seismic brace location to keep clevis hanger from collapsing during seismic event.

Approvals: Included in our Seismic Engineering Guidelines approved by the State of California Office of Statewide Health Planning and Development **(OSHPD)**. For additional load, spacing and placement information relating to OSHPD projects, please refer to our Seismic Engineering Guidelines OPM-0052-13, for 2½" - 8" (B3100) only

Installation Note: Fig. 1CBS fits easily over the cross bolt and attaches by pinching tabs down.

Finish: Pre-Galvanized. Contact customer service for alternative finishes and materials.

Order By: Figure number and finish.

Part No.	Pipe Size in.	(mm)	Approx. Wt./100 lbs.	(kg)
1CBS-1	1"	(25)	3.2	(1.4)
1CBS-1¼	1¼"	(32)	4.1	(1.8)
1CBS-1½	1½"	(40)	4.8	(2.2)
1CBS-2	2"	(50)	9.4	(4.2)
1CBS-2½	2½"	(65)	11.4	(5.2)
1CBS-3	3"	(75)	13.9	(6.8)
1CBS-3½	3½"	(90)	16.0	(7.2)
1CBS-4	4"	(100)	18.0	(8.1)
1CBS-5	5"	(125)	27.3	(12.4)
1CBS-6	6"	(150)	32.5	(14.7)
1CBS-8	8"	(200)	42.5	(19.2)
1CBS-10	10"	(250)	72.7	(32.9)
1CBS-12	12"	(300)	86.3	(39.1)
1CBS-14	14"	(350)	157.6	(71.5)
1CBS-16	16"	(400)	183.7	(83.3)
1CBS-18	18"	(450)	224.6	(101.9)
1CBS-20	20"	(500)	254.0	(115.2)

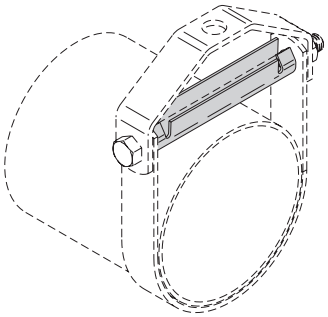

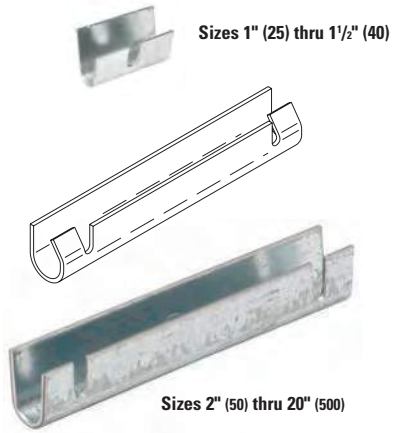

TOLCO Fig. 25 - Surge Restrainer

Size Range: — One size fits ¾" (20mm) thru 2" (40mm) pipe.

Material: — Pre-Galvanized Steel

Function: — Designed to be used in conjunction with Fig. 200 band hangers to restrict the upward movement of piping as it occurs during sprinkler head activation or earthquake type activity. The surge restrainer is easily and efficiently installed by snapping into a locking position on the band hanger. This product is intended to satisfy the requirements as indicated in the National Fire Protection Association NFPA 13, 2016 edition, 9.2.3.4.4.1 and 9.2.3.4.4.4 Can be used to restrain either steel pipe or CPVC plastic Pipe.

Approvals: — Underwriters Laboratories Listed only when used with band hanger Fig. 200, in the USA **(UL)** and Canada **(cUL)**.

Finish: Pre-Galvanized

Order By: Figure number and band hanger, size from ¾" (20mm) thru 2" (40mm).

Patent #5,344,108

Part No.	Approx. Wt./100 lbs.	(kg)
25	4.8	(2.2)

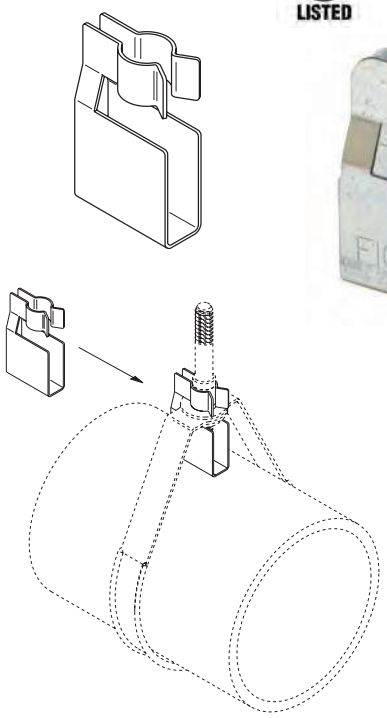

All dimensions in charts and on drawings are in inches. Dimensions shown in parentheses are in millimeters unless otherwise specified.

B3373 - Standard Riser Clamp
B3373C - PVC Coated Standard Riser Clamp

Size Range: (B3373) 1/2" (15mm) thru 30" (760mm) pipe
(B3373C) 1/2" (15mm) thru 6" (150mm) pipe

Material: Steel

Function: Used for supporting vertical piping.

Approvals: Underwriters Laboratories Listed in the USA **(UL)**, Canada **(cUL)** 3/4" (20mm) - 8" (200mm). Factory Mutual Engineering Approved **(FM)**, 3/4" (20mm) thru 8" (200mm). Conforms to Federal Specification WW-H-171E & A-A-1192A, Type 8, and Manufacturers Standardization Society ANSI/MSS SP-69 & SP-58, Type 8.

Maximum Temperature: 650°F (343°C)

Finish: Plain. Contact customer service for alternative finishes and materials.

Order By:
Figure number, pipe size and finish.

Designed to meet or exceed requirements of FM DS 2-0.

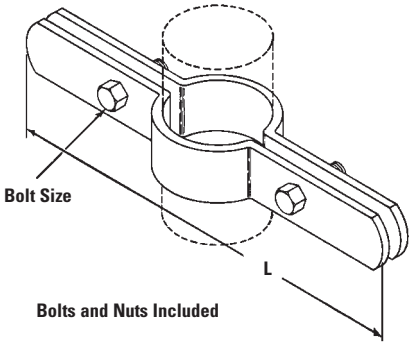

B3373C

Part No.	Pipe Size in.	(mm)	L in.	(mm)	Bolt Size	Approx. Wt./100 Lbs.	(kg)
B3373-1/2	1/2"	(15)	9"	(228.6)	3/8"-16 x 1 1/4"	101	(45.9)
B3373-3/4	3/4"	(20)	9 1/4"	(234.9)	3/8"-16 x 1 1/4"	105	(47.7)
B3373-1	1"	(25)	9 9/16"	(242.9)	3/8"-16 x 1 1/4"	109	(49.4)
B3373-1 1/4	1 1/4"	(32)	10"	(254.0)	3/8"-16 x 1 1/4"	112	(50.9)
B3373-1 1/2	1 1/2"	(40)	10 1/4"	(260.3)	3/8"-16 x 1 1/2"	113	(51.1)
B3373-2	2"	(50)	10 3/4"	(273.0)	3/8"-16 x 1 1/2"	165	(75.0)
B3373-2 1/2	2 1/2"	(65)	11 1/4"	(285.7)	3/8"-16 x 1 1/2"	180	(81.6)
B3373-3	3"	(80)	11 15/16"	(303.2)	3/8"-16 x 1 1/2"	195	(88.4)
B3373-3 1/2	3 1/2"	(90)	12 3/8"	(314.3)	1/2"-13 x 1 3/4"	217	(98.5)
B3373-4	4"	(100)	12 7/8"	(327.0)	1/2"-13 x 1 3/4"	228	(103.5)
B3373-5	5"	(125)	14"	(355.6)	1/2"-13 x 1 3/4"	480	(217.7)
B3373-6	6"	(150)	15 3/16"	(385.8)	1/2"-13 x 2"	526	(238.6)
B3373-8	8"	(200)	17 3/4"	(450.8)	5/8"-11 x 2 1/2"	957	(434.1)
B3373-10	10"	(250)	19 7/16"	(493.7)	5/8"-11 x 2 1/2"	1101	(499.4)
B3373-12	12"	(300)	21 11/16"	(550.9)	5/8"-11 x 3"	1622	(735.7)
B3373-14	14"	(350)	23 9/16"	(598.5)	5/8"-11 x 3"	1732	(785.6)

Notes: For ductile iron (D.I.) pipe use part number B3373DI-pipe size. Contact B-Line Engineering for more information.

For larger sizes, consult the full line pipe hanger catalog.

All dimensions in charts and on drawings are in inches. Dimensions shown in parentheses are in millimeters unless otherwise specified.

B3205 - Threaded rod (right-hand threads - both ends)
B3205L - Threaded rod (right & left hand threads)

Size Range: 3/8"-16 thru 7/8"-9 rod

Material: Steel

Function: Recommended for use as a hanger support in hanger assemblies. Rod is threaded on both ends with right hand threads of the length shown. Also available with left and right hand threads - specify Fig. B3205L when ordering.

Maximum Temperature: 750°F (399°C)

Finish: Plain or Electro-Galvanized. Contact customer service for alternative finishes and materials.

Order By: Figure number, rod size, length and finish

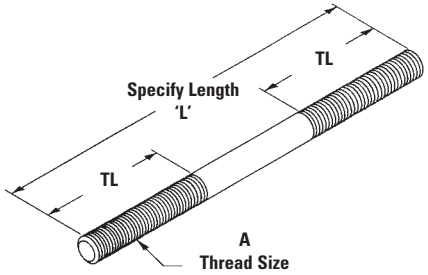

Part No.	Thread Size A	Standard Thread Length TL in.	(mm)	Design Load 650°F (343°C) Lbs.	(kN)	750°F (399°C) Lbs.	(kN)
B3205-3/8 x 'L'	3/8"-16	2 1/2"	(63.5)	730	(3.25)	572	(2.54)
B3205-1/2 x 'L'	1/2"-13	2 1/2"	(63.5)	1350	(6.00)	1057	(4.70)
B3205-5/8 x 'L'	5/8"-11	2 1/2"	(63.5)	2160	(9.61)	1692	(7.52)
B3205-3/4 x 'L'	3/4"-10	3"	(76.2)	3230	(14.37)	2530	(11.25)
B3205-7/8 x 'L'	7/8"-9	3 1/2"	(88.9)	4480	(19.93)	3508	(15.60)

For larger sizes consult full line pipe hanger catalog.

ATR - All threaded rod - 120" (3.05m) lengths
TOLCO Fig. 99 - all threaded rod cut to length

OPM

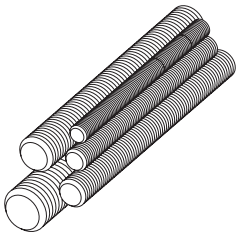

Size Range: 1/4"-20 thru 7/8"-9 rod in 120" lengths or cut to length

Material: Steel

Maximum Temperature: 750°F (399°C)

Finish: Plain or Electro-Galvanized. Contact customer service for alternative finishes and materials.

Approvals: Included in our Seismic Engineering Guidelines approved by the State of California Office of Statewide Health Planning and Development **(OSHPD)**. For additional load, spacing and placement information relating to OSHPD projects, please refer to our Seismic Engineering Guidelines, OPM-0052-13.

Order By: Figure number, rod size, length and finish

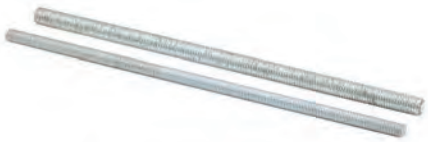

Part No. - Size x Length ATR	Fig. 99	Threads Per Inch	Recommended Load Lbs.	(kN)	Approx. Wt./100 Ft. Lbs.	(kg)
ATR 1/4" x 120	99-1/4" x length	20	240	(1.07)	12	(5.44)
ATR 3/8" x 120	99-3/8" x length	16	730	(3.24)	29	(13.15)
ATR 1/2" x 120	99-1/2" x length	13	1350	(6.00)	53	(24.04)
ATR 5/8" x 120	99-5/8" x length	11	2160	(9.60)	89	(40.37)
ATR 3/4" x 120	99-3/4" x length	10	3230	(14.37)	123	(55.79)
ATR 7/8" x 120	99-7/8" x length	9	4480	(19.93)	170	(77.11)

For larger sizes consult full line pipe hanger catalog.

All dimensions in charts and on drawings are in inches. Dimensions shown in parentheses are in millimeters unless otherwise specified.

TOLCO Fig. 200 - "Trimline" Adjustable Band Hanger
TOLCO Fig. 200F - "Trimline" Adjustable Band Hanger with Felt Lining for Copper Tubing
TOLCO Fig. 200C - "Trimline" Adjustable Band Hanger with Plastic Coated
TOLCO Fig. 200S - "Trimline" Adjustable Band Hanger with Removable Nut (For sizes 1" thru 2")

Size Range:
Fig. 200 - 1/2" (15mm) thru 8" (200mm) pipe

Material: Steel, Pre-Galvanized

Function: For fire sprinkler and other general piping purposes. Knurled swivel nut design permits hanger adjustment after installation.

Features:
- 1/2" (15mm) thru 2" (50mm) sizes have flared edges for ease of installation on all pipe types and protects CPVC plastic pipe from abrasion. Captured knurled nut design (flared top) on 1" thru 2" sizes keep nut from separating with hanger. Hanger is easily installed around pipe.
- 1/2" (15mm), 3/4" (20mm), and 2 1/2" (65mm) thru 8" (200mm)) Spring tension on nut holds it securely in hanger before installation. Knurled nut is easily removed.
- For 1/2" (15mm) and 3/4" (20mm) sizes with non-captured knurl nuts order Fig. 200S

Approvals: Underwriters Laboratories listed (1/2" (15mm) thru 8" (200mm)) in the USA **(UL)** and Canada **(cUL)** for steel and CPVC plastic pipe and Factory Mutual Engineering Approved **(FM)** (3/4" (20mm) thru 8" (200mm)). Conforms to Federal Specifications WW-H-171E & A-A-1192A, Type 10 and Manufacturers Standardization Society ANSI/MSS SP-69 & SP-58, Type 10.

Maximum Temperature: 650°F (343°C)

Finish: Pre-Galvanized. Stainless Steel materials will be supplied with (2) hex nuts in place of a knurl nut.

Order By: Part number and pipe size

** **Note:** For metric hanger rod sizes add the metric rod size to the figure number. Example: 200M8-1 1/2 or 200M10-1 1/2

† M8 rod size is not UL Listed or FM Approved

A
Overall Height

B
Center of pipe to top of knurled hanger rod nut.

D
Top of pipe to bottom of hanger rod nut.

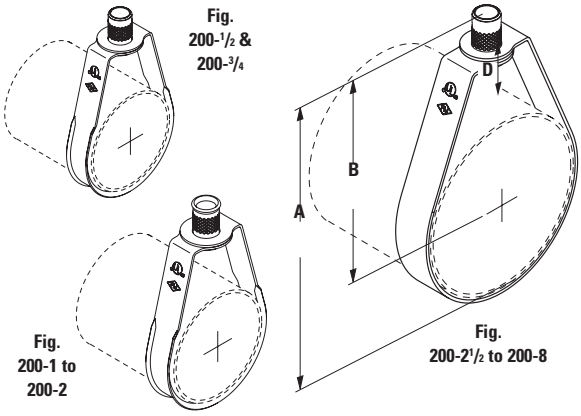

Fig. 200C
200C-1 1/2 shown

Fig. 200F
200F-1 1/2 shown

Fig. 200
shown with captured nut
1" thru 2" sizes only

Fig. 200 & Fig. 200S
shown with
non-captured nut

Part No.**	Pipe Size in.	(mm)	Rod Size in.	mm**	A in.	(mm)	B in.	(mm)	D in.	(mm)	Max. Rec. Load lbs.	(kN)	Approx. Wt./100 lbs.	(kg)
200-1/2	1/2"	(15)	3/8"-16	M8† or M10	3 1/8"	(79.4)	2 5/8"	(66.7)	1 11/32"	(34.1)	400	(1.78)	11	(5.0)
200-3/4	3/4"	(20)	3/8"-16	M8† or M10	3 1/8"	(79.4)	2 1/2"	(63.5)	1 1/16"	(27.0)	400	(1.78)	11	(5.0)
200-1	1"	(25)	3/8"-16	M8† or M10	3 3/8"	(85.7)	2 5/8"	(66.7)	1 1/8"	(28.6)	400	(1.78)	12	(5.5)
200-1 1/4	1 1/4"	(32)	3/8"-16	M8† or M10	3 3/4"	(94.0)	2 7/8"	(73.0)	1 5/32"	(29.3)	400	(1.78)	13	(5.9)
200-1 1/2	1 1/2"	(40)	3/8"-16	M†8 or M10	3 7/8"	(98.4)	2 7/8"	(73.0)	1 3/16"	(30.2)	400	(1.78)	14	(6.4)
200-2	2"	(50)	3/8"-16	M8† or M10	4 1/2"	(114.3)	3 9/50"	(80.8)	1 3/16"	(30.2)	400	(1.78)	15	(6.9)
200-2 1/2	2 1/2"	(65)	3/8"-16	M10	5 5/8"	(142.9)	4 1/8"	(104.7)	1 7/16"	(36.5)	600	(2.67)	27	(12.3)
200-3	3"	(75)	3/8"-16	M10	5 7/8"	(149.1)	4"	(101.6)	1 1/4"	(31.7)	600	(2.67)	29	(13.3)
200-3 1/2	3 1/2"	(90)	3/8"-16	M10	7 3/8"	(187.3)	5 1/4"	(133.3)	2 3/16"	(55.6)	600	(2.67)	34	(15.6)
200-4	4"	(100)	3/8"-16	M10	7 3/8"	(187.3)	5"	(127.0)	1 3/8"	(34.9)	1000	(4.45)	35	(16.0)
200-5	5"	(125)	1/2"-13	M12	9 1/8"	(231.8)	6 1/4"	(158.7)	3 11/32"	(84.9)	1250	(5.56)	66	(30.2)
200-6	6"	(150)	1/2"-13	M12	10 1/8"	(257.2)	6 3/4"	(171.4)	2 7/32"	(56.3)	1250	(5.56)	73	(33.4)
200-8	8"	(200)	1/2"-13	M12	13 1/8"	(333.4)	8 3/4"	(222.2)	3 7/32"	(81.7)	1250	(5.56)	136	(62.3)

All dimensions in charts and on drawings are in inches. Dimensions shown in parentheses are in millimeters unless otherwise specified.

1.0 PRODUCT DESCRIPTION

- Victaulic Automatic Sprinkler Cabinets provide for storage of a supply of sprinklers. Maintaining a supply of spare sprinklers on the premises of automatic sprinkler systems will aid in the prompt replacement of operated or damaged sprinklers and returning a fire protection system to service as soon as possible. This is a requirement of NFPA and most Authorities Having Jurisdiction. Refer to the applicable NFPA standard governing your specific installation for further details.
- Six or twelve sprinkler capacity cabinets are available. This also provides for storage of the appropriate wrench which is required for the installation and removal of sprinklers.
- NFPA 25 requires the total number of spare sprinklers to be stored on the premises of an automatic sprinkler system meet the minimum quantities shown in the accompanying table. When the sprinkler system includes more than one type of temperature rating sprinkler, the stock of spare sprinklers must include a proportional sampling of each type and temperature rating; however, a minimum of 3 each is recommended.

Sprinklers in Building	Min. Number of Spare Sprinklers
Under 300	6[1]
300 to 1000	12
Over 1000	24

[1] A minimum of three sprinklers of each type and temperature rating are required for residential fire sprinkler systems in one- and two-family dwellings and mobile homes.

ALWAYS REFER TO ANY NOTIFICATIONS AT THE END OF THIS DOCUMENT REGARDING PRODUCT INSTALLATION, MAINTENANCE OR SUPPORT.

 © 2023 Victaulic Company. All rights reserved.

2.0 CERTIFICATION/LISTINGS

Not applicable – contact Victaulic with any questions.

3.0 SPECIFICATIONS – MATERIAL

Models:

- ☐ 12 sprinklers
- ☐ 6 sprinklers
- ☐ 3 sprinklers (NFPA/3D, Residential)
- ☐ 6 large sprinklers

Material: Heavy gauge steel, red enamel.

Cabinets are available in six or twelve sprinkler capacities with dimensions and shelf variations as shown below. The cabinets are of welded construction fabricated from low carbon steel sheet. The box and shelves are fabricated from 0.030" thick material and the cover is fabricated from 0.042" thick material.

The cover is mounted to the box, at the top, with two 0.036" thick steel butt type hinges. A coat of red enamel paint is applied inside and out, and a label indicating that the cabinet is for spare sprinklers is bonded to the cover.

4.0 DIMENSIONS

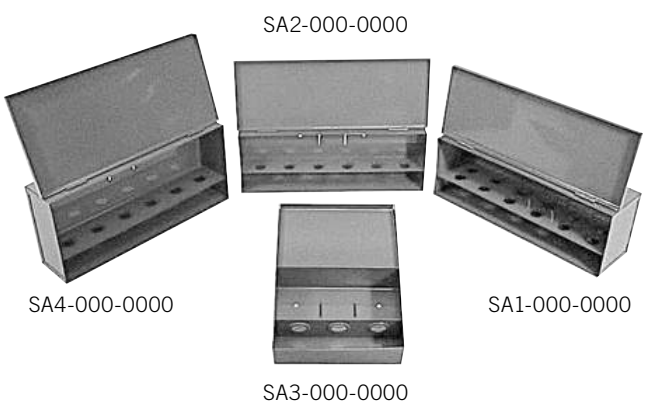

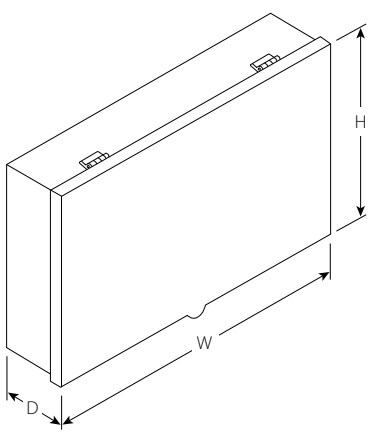

Victaulic Part Number	Description	Use With	Dimensions		
			H inches mm	W inches mm	D inches mm
SA1-000-0000	For 12 Sprinklers	V10, V26, V27, V34 (except V3403 & V3404)	5.25 133	14.31 364	4.00 102
SA2-000-0000	For 6 Sprinklers	V27, V3403, V3404, V34	5.25 133	14.31 364	2.38 60
SA3-000-0000	For 3 Sprinklers (NFPA 13D)	V27 Residential	5.25 133	7.31 186	2.38 60
SA4-000-0000	For 6 Large Sprinklers	V40, V38, Concealed, K1 ESFR, All Intermediate Level Sprinklers, All Guards[2]	6.50 165	14.31 364	3.13 79

[2] Guards will only fit if **NOT** assembled to sprinkler. Capacity may be reduced.

NOTE

- Specify part number and capacity when ordering.

 © 2023 Victaulic Company. All rights reserved.

Victaulic® Carbon Steel Couplings and Grooved Fittings

Style L07

Style LW07

Style L77

No. L100/LW100

No. L110/LW110

No. L20/LW20

No. L25/LW25

No. L45/LW45

No. L46

No. L50/LW50

No. L51/LW51

No. L52

No. L60/LW60

No. L920N

1.0 PRODUCT DESCRIPTION

This product line consists of couplings and fittings manufactured from ASME code-compliant carbon steel material.

Style L07 and LW07 Rigid Couplings, Style L77 Flexible Coupling, and Grooved Fittings

Available Sizes

- Style L07 Rigid Coupling, Style L77 Flexible Coupling and OGS Fittings: 1 ½ – 12"/DN40 – DN300
- Style LW07 Rigid Coupling and AGS Fittings: 14 – 16"/DN350 – DN400

Pipe Material

- Carbon steel

Maximum Working Pressure

- Style L07 and Style LW07 Rigid Couplings: 750 psi/5171 kPa/52 bar on standard weight carbon steel pipe.
- Style L77 Flexible Couplings: 1000 psi/6895 kPa/69 bar.
- OGS and AGS Fittings: Pressure rating is equivalent to the pressure rating of the coupling used to install it (see section 5.0 for Style L07, Style LW07 and Style L77 pressure ratings).

Operating Temperature Range

- Dependent on housing and gasket selection from Section 3.0.14-16

ALWAYS REFER TO ANY NOTIFICATIONS AT THE END OF THIS DOCUMENT REGARDING PRODUCT INSTALLATION, MAINTENANCE OR SUPPORT.

 © 2021 Victaulic Company. All rights reserved.

1.0 PRODUCT DESCRIPTION (CONTINUED)

Pipe Preparation

- Style L07 and Style L77 couplings are exclusively for use with fittings, valves, accessories and pipe which feature ends formed with the Victaulic Original Groove System (OGS) groove profile. Cut or roll grooved in accordance with publication 25.01: Victaulic Standard Groove Specification
- The Style LW07 coupling is exclusively for use with fittings, valves, accessories and pipe which feature ends formed with the Advanced Groove System (AGS) grooved profile. Cut or roll grooved in accordance with publication 25.09: Victaulic Advanced Groove System (AGS) Roll Groove Specification
- All fittings less than 14"/DN350 are supplied with the Victaulic OGS groove. These fittings are exclusively for use with Victaulic couplings, valves, accessories and pipe which feature ends formed with the Victaulic OGS groove.
- All fittings 14"/DN350 or larger are supplied with the Victaulic AGS groove. These fittings are exclusively for use with Victaulic couplings, valves, accessories and pipe which feature ends formed with the Victaulic AGS groove.

Codes and Requirements

- In accordance with or conforms to all material requirements of ASME piping codes. Style L07, Style WL07, and Style L77 couplings also meet the design intent of the ASME piping codes.

NOTE

- Material Test Reports (MTRs) are available for all products. Please specify requirement at time of order.

 © 2021 Victaulic Company. All rights reserved.

2.0 CERTIFICATION/LISTINGS

Victaulic standard IPS couplings and grooved end fittings may be utilized on ASME B31.3 Piping Code applications within their published temperature and pressure parameters. For more information, contact Victaulic.

These products are registered in Canada in accordance with CSA B51, the Canadian Boiler, Pressure Vessel and Pressure Piping Code. Contact Victaulic for registered working pressures, temperatures and confirmation of the applicable CRN by Province or Territory.

Product designed and manufactured under the Victaulic Quality Management System, as certified by LPCB in accordance with ISO-9001:2015.

3.0 SPECIFICATIONS – MATERIAL

Housing: (specify choice)

- ☐ Standard: Carbon steel conforming to ASTM SA352 Grade LCC for use on applications to –50°F/–46°C.
- ☐ Optional: Carbon steel confirming to ASTM A216 Grade WCB for use on applications to –20°F/–29°C.

Fittings & Trunnion Fittings:

Carbon steel wall thickness is standard weight unless otherwise noted. All fittings are cast from ASTM SA352 Grade LCC or ASTM A216 Grade WCB, or fabricated from ASTM A420 WPL6 or ASTM A333 Grade 6 for code compliant applications.

Housing and Fitting Coating: (specify choice)

- ☐ Standard: Orange enamel.
- ☐ Optional: Hot dipped galvanized conforming to ASTM A123.
- ☐ Optional: Contact Victaulic with your requirements for other coatings.

Gasket: (specify choice[1])

- ☐ **Grade "E" EPDM**

  EPDM (Green stripe color code). Temperature range –50°F to +230°F/-46°C to +110°C. May be specified for cold and hot water service within the specified temperature range plus a variety of dilute acids, oil-free air and many chemical services. UL classified in accordance with ANSI/NSF 61 for cold +73°F/+23°C and hot +180°F/+82°C potable water service and ANSI/NSF 372. NOT COMPATIBLE FOR PETROLEUM SERVICES.

- ☐ **Grade "L" Silicone[2]**

  Silicone (Red gasket color code) Temperature range –50°F to +350°F/–46°C to +177°C. May be specified for dry heat, air without hydrocarbons to +350°F/+177°C and certain chemical services.

- ☐ **Grade "T" Nitrile**

  Nitrile (Orange stripe color code). Temperature range –20°F to +180°F/–29°C to +82°C. May be specified for petroleum products, hydrocarbons, air with oil vapors, vegetable and mineral oils within the specified temperature range; not compatible for hot dry air over +140°F/+60°C and water over +150°F/+66°C. NOT COMPATIBLE FOR USE WITH HOT WATER SERVICES OR STEAM SERVICES.

1 Services listed are General Service Guidelines only. It should be noted that there are services for which these gaskets are not compatible. Reference should always be made to the latest Victaulic Gasket Selection Guide for specific gasket service guidelines and for a listing of services which are not compatible.

2 Grade "L" Silicone not available for the No. L920N Mechanical-T

Hardware: (specify choice)

- ☐ Standard: Stainless steel oval neck track bolts: ASTM A193, Grade B8M, Class 2. Heavy hex nuts with galling reducing coating: ASTM A194, Grade 8M.
- ☐ Optional: Alloy steel studs: ASTM A193, Grade B7. Heavy hex nuts: ASTM A194 Grade 2H.
- ☐ Optional: Stainless steel studs: ASTM A193, Grade B8M, Class 2. Heavy hex nuts with galling reducing coating: ASTM A194, Grade 8M.
- ☐ Optional: Carbon steel oval neck track bolts: ASTM A449 (imperial) and ISO 898-1 Class 9.8 (metric). Carbon steel hex nuts: ASTM A563 Grade B (imperial – heavy hex nuts) and ASTM A563M Class 9 (metric – hex nuts). Track bolts and hex nuts are zinc electroplated: ASTM B633 ZN/FE5, finish Type III (imperial) or Type II (metric).

NOTE

- For other materials, contact Victaulic.

 © 2021 Victaulic Company. All rights reserved.

4.0 DIMENSIONS

Style L07 Rigid Coupling
Style LW07 AGS Rigid Coupling

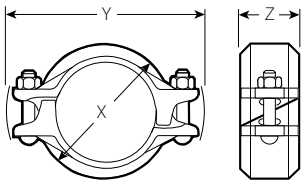

L07 Rigid Coupling
1 ½ – 12"/DN40 – DN300

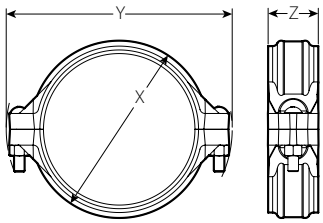

LW07 AGS Rigid Coupling
14 – 16"/DN350 – DN400

Size			Bolting			Dimensions			Weight
Nominal Size inches DN	**Actual Outside Diameter** inches mm	**Pipe End Separation[3] Allowable** inches mm	**Qty.**	**Bolt Size** inches mm	**Stud Size** inches mm	**X** inches mm	**Y** inches mm	**Z** inches mm	**Approximate (Each)** lb kg
1 ½ DN40	1.900 48.3	0.05 1.2	2	⅜ × 2	⅜ x 3	2.94 75	5.81 148	1.84 47	1.8 0.8
2 DN50	2.375 60.3	0.07 1.7	2	½ × 2 ½	½ x 3 ½	3.35 85	5.78 147	1.84 47	2.5 1.1
2 ½	2.875 73.0	0.07 1.7	2	½ x 2 ½	½ x 3 ½	3.88 99	6.38 162	1.84 47	2.9 1.3
3 DN80	3.500 88.9	0.07 1.7	2	½ × 2 ½	½ x 3 ½	4.54 115	6.81 173	1.84 47	3.3 1.5
4 DN100	4.500 114.3	0.16 4.1	2	½ × 2 ¾	½ x 3 ½	5.81 148	8.21 209	2.07 53	5.8 2.6
6 DN150	6.625 168.3	0.16 4.1	2	⅝ × 3 ¼	⅝ x 4 ½	8.26 210	10.83 275	2.07 53	9.1 4.1
8 DN200	8.625 219.1	0.19 4.8	2	¾ × 4 ¼	⅝ x 4 ½	10.54 268	13.74 349	2.51 64	16.6 7.5
10 DN250	10.750 273	0.13 3.3	2	⅞ × 6 ½	⅞ x 8	12.86 327	16.98 431	2.56 65	25.9 11.7
12 DN300	12.750 323.9	0.13 3.3	2	⅞ × 6 ½	⅞ x 8	14.86 377	18.88 480	2.56 65	31 14.1
AGS™ LW07 AGS Rigid Coupling									
14 DN350	14.000 355.6	0.25 6.4	2	1 × 5 ½	1 x 7	15.88 403	20.63 524	4.75 121	59 26.8
16 DN400	16.000 406.4	0.25 6.4	2	1 × 5 ½	1 x 7	18.13 460	23.5 597	4.75 121	72 32.7

[3] The allowable pipe end separation dimension shown is for system layout purposes only. Style L07 rigid couplings are considered rigid connections and will not accommodate expansion/contraction or angular movement of the piping system. Contact Victaulic for torsional resistance information.

 © 2021 Victaulic Company. All rights reserved.

4.1 DIMENSIONS

Style L77 Flexible Coupling

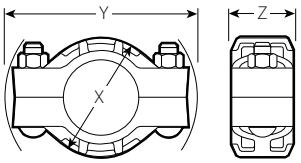

Size		Pipe End Separation[4]	Deflection from Centerline[4]		Bolt/Nut		Dimensions			Weight
Nominal inches DN	Actual Outside Diameter inches m	Allowable inches mm	Per Cplg. Degrees	Pipe inches/ft. mm/m	Qty.	Size inches	X inches mm	Y inches mm	Z inches mm	Approx. (Each) lb kg
1 ½ DN40	1.900 48.3	0–0.06 0–1.6	1º–56′	0.40 33	2	½ x 2½	3.13 79	5.38 137	1.88 48	2.3 1.1
2 DN50	2.375 60.3	0–0.06 0–1.6	1º–31′	0.32 26	2	½ x 2½	3.63 92	5.88 149	1.88 48	2.9 1.3
2 ½	2.875 73.0	0–0.06 0–1.6	1º–15′	0.26 22	2	½ x 2¾	4.25 108	6.50 165	1.88 48	3.4 1.6
3 DN80	3.500 88.9	0–0.06 0–1.6	1º–2′	0.22 18	2	½ x 2¾	5.00 127	7.13 181	1.88 48	4.1 1.9
4 DN100	4.500 114.3	0–0.13 0–3.2	1º–36′	0.34 28	2	⅝ x 3¼	6.13 156	8.88 226	2.13 54	7.4 3.4
6 DN150	6.625 168.3	0–0.13 0–3.2	1º–5′	0.23 18	2	¾ x 4¼	8.63 219	11.88 302	2.13 54	13.3 6.0
8 DN200	8.625 219.1	0–0.13 0–3.2	0º–50′	0.18 14	2	⅞ x 5	11.00 279	14.75 375	2.50 63	23.1 1.5
10 DN250	10.750 273.0	0–0.13 0–3.2	0º–40′	0.14 12	2	1 x 6	13.63 346	17.13 435	2.63 67	30.9 14.0
12 DN300	12.750 323.9	0–0.13 0–3.2	0º–34′	0.12 9	2	1 x 6½	15.63 397	19.25 489	2.63 67	34.5 15.7

[4] Allowable Pipe End Separation and Deflection figures show the maximum nominal range of movement available at each joint for standard roll grooved pipe. Figures for standard cut grooved pipe may be doubled. These figures are maximums; for design and installation purposes these figures should be reduced by: 50% for ¾ – 3 ½"/DN20 – DN90; 25% for 4"/DN100 and larger.

 © 2021 Victaulic Company. All rights reserved.

4.2 DIMENSIONS

No. L100 90° Long Radius Elbow
No. LW100 AGS 90° Long Radius Elbow
No. L110 45° Long Radius Elbow
No. LW110 AGS 45° Long Radius Elbow
No. L20 Tee
No. LW20 AGS Tee

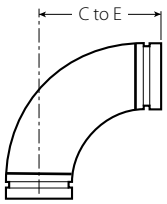

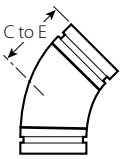

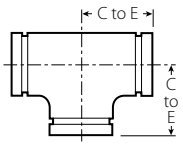

Nominal Size inches DN	Actual Outside Diameter inches mm	No. L100 90° Elbow C to E inches mm	No. L100 90° Elbow Approximate Weight (Each) lb kg	No. L110 45° Elbow C to E inches mm	No. L110 45° Elbow Approximate Weight (Each) lb kg	No. L20 Tee C to E inches mm	No. L20 Tee Approximate Weight (Each) lb kg
1 ½[5] DN40	1.900 48.3	3.63 92	1.8 0.8	2.5 64	1.3 0.6	2.75 70	2.4 1.1
2[5] DN50	2.375 60.3	4.38 111	3.6 1.6	2.75 70	2.1 1.0	3.25 83	3.7 1.7
2 ½[5]	2.875 73.0	5.13 131	6.89 175	3.0 76	4.0 1.8	3.75 95	6.6 3.0
3[5] DN80	3.500 88.9	5.88 149	8.2 3.7	3.38 86	5.8 2.6	4.25 108	9.2 4.2
4 DN100	4.500 114.3	7.50 191	12.0 5.4	4.00 102	7.7 3.5	5.00 127	11.7 5.3
6 DN150	6.625 168.3	10.75 273	31.0 14.1	5.50 140	18.0 8.2	6.50 165	35.9 16.3
8 DN200	8.625 219.1	14.25 362	65.0 29.5	7.25 184	49.0 22.2	7.75 197	65.6 29.8
10[6] DN250	10.750 273.0	17.5 445	130.0 59.0	8.5 216	78.0 35.4	10.75 273	136.0 61.7
12[6] DN300	12.750 323.9	20.5 521	192.0 87.1	10.0 254	95.0 43.1	12.5 318	151.0 68.5
AGS™		No. LW100 AGS 90° Elbow		No. LW110 AGS 45° Elbow		No. LW20 AGS Tee	
14 DN350	14.00 355.6	21.00 533	273.0 123.8	8.75 222	144.0 65.3	11.00 279	170.0 77.1
16 DN400	16.000 406.4	24.00 610	366.0 166.0	10.00 254	208.0 94.3	12.00 305	278.0 126.1

[5] Schedule 80 wall thickness. For other wall thickness options, contact Victaulic

[6] ASTM A420 WPL6 wrought fitting with A333 Grade 6 tangents. Contact Victaulic for cast options.

NOTES

- All fittings are cast except as noted.
- Fitting flow data for 1 ½ – 12" I DN40 – DN300, refer to publication 07.01.
- Fitting flow data for 14 – 16" I DN350 – DN400, refer to publication 20.05.

 © 2021 Victaulic Company. All rights reserved.

4.3 DIMENSIONS

No. L25 Reducing Tee
No. LW25 AGS Reducing Tee

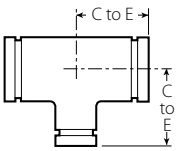

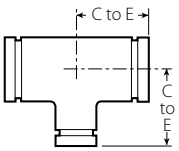

Nominal Size inches DN			No. L25 Reducing Tee C to E (Run) inches mm	C to E (Branch) inches mm	Approx. Weight (Each) lb kg
2 DN50	x 2 DN50	x 1 ½[5] DN40	3.25 83	3.00 76	3.1 1.4
3 DN80	x 3 DN80	x 1 ½[5] DN40	4.25 108	4.00 102	7.9 3.6
		2[5] DN50	4.25 108	4.00 102	8.1 3.7
4 DN100	x 4 DN100	x 1 ½[5] DN40	5.00 127	4.00 102	12.9 5.8
		2[5] DN50	5.00 127	4.00 102	13.0 5.9
		2 ½[5]	5.00 127	5.00 127	16.9 7.7
		3[5] DN80	5.00 127	5.00 127	14.3 6.5
6 DN150	x 6 DN150	x 2[5] DN50	6.50 165	5.50 140	33.6 15.2
		3[5] DN80	6.50 165	6.00 152	35.5 16.1
		4 DN100	6.50 165	6.00 152	34.5 15.6
8 DN200	x 8 DN200	x 2[5] DN50	7.75 197	6.50 165	60.9 27.6
		2 ½[5]	7.75 197	7.25 184	66.0 30.0
		3[5]	7.75 197	7.25 184	66.0 30.0
		4 DN100	7.75 197	7.25 184	60.5 27.4
		6 DN150	7.75 197	7.50 191	62.3 28.3
10 DN250	x 10 DN250	x 6 DN150	9.00 229	9.00 229	96.7 43.9
		8 DN200	9.00 229	9.00 229	100.3 45.5

Nominal Size inches DN			No. L25 Reducing Tee C to E (Run) inches mm	C to E (Branch) inches mm	Approx. Weight (Each) lb kg
12 DN300	x 12 DN300	x 8[6] DN200	12.5 318	11.25 286	172.0 78.0
		10[6] DN250	12.5 318	11.75 298	182.0 82.6
AGS™			No. LW25 AGS Reducing Tee		
14 DN350	x 14 DN350	x 4 DN100	11.00 279	10.00 254	210.0 95.3
		8 DN200	11.00 279	10.50 267	205.0 93.0
		10 DN250	11.00 279	10.50 267	200.0 90.7
16 DN400	x 16 DN400	x 4 DN100	12.00 305	11.00 279	234.0 106.1
		6 DN000	12.00 305	11.50 292	238.0 108.0
		8 DN200	12.00 305	11.75 298	248.0 112.5
		10 DN250	12.00 305	11.75 298	262.0 118.8

[5] Schedule 80 wall thickness. For other wall thickness options, contact Victaulic

[6] ASTM A420 WPL6 wrought fitting with A333 Grade 6 tangents. Contact Victaulic for cast options.

NOTES

- All fittings are cast except as noted.
- Fitting flow data for 1 ½ – 12" I DN40 – DN300, refer to publication 07.01.
- Fitting flow data for 14 – 16" I DN350 – DN400, refer to publication 20.05.
- Outlets 12"/DN300 and smaller will be provided with OGS grooves.

 © 2021 Victaulic Company. All rights reserved.

4.4 DIMENSIONS

No. L45R Flange Adapter Nipple 150# – Raised Face
No. LW45R AGS Flange Adapter Nipple 150# – Raised Face
No. L46R Flange Adapter Nipple 300# – Raised Face

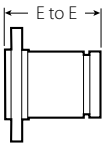

Nominal Size inches DN	Actual Outside Diameter inches mm	No. L45R Flange Adapter Nipple 150#		No. L46R Flange Adapter Nipple 300#	
		E to E inches mm	Approximate Weight (Each) lb kg	E to E inches mm	Approximate Weight (Each) lb kg
1 ½ DN40	1.900 48.3	4.00 102	3.7 1.7	4.00 102	6.5 2.9
2 DN50	2.375 60.3	4.00 102	6.8 3.1	4.00 102	8.0 3.6
2 ½	2.875 73.0	4.00 102	10.1 4.6	–	–
3 DN80	3.500 88.9	4.00 102	11.7 4.9	4.00 102	15.8 7.2
4 DN100	4.500 114.3	6.00 152	16.4 7.4	6.00 152	28.4 12.9
6 DN150	6.625 168.3	6.00 152	26.0 11.8	6.00 152	42.2 19.1
8 DN200	8.625 219.1	6.00 152	39.6 18.0	6.00 152	64.6 29.3
10 DN250	10.750 273.0	8.00 203	61.6 27.9	8.00 203	103.0 46.7
12 DN300	12.750 323.9	8.00 203	85.8 38.9	8.00 203	133.0 60.3
AGS™		No. LW45R AGS Flange Adapter Nipple 150#			
14 DN350	14.00 355.6	8.00 203	128.0 58.1	–	–
16 DN400	16.000 406.4	8.00 203	149 67.6	–	–

NOTES

- Flange facing to be serrated raised face.
- Outlets 12"/DN300 and smaller supplied with OGS grooved ends

 © 2021 Victaulic Company. All rights reserved.

4.5 DIMENSIONS

No. L50 Concentric Reducer
No. LW50 AGS Concentric Reducer

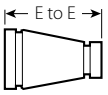

Nominal Size inches DN			E to E inches mm	Approximate Weight (Each) lb kg
2 DN50	x	1½[5] DN40	3.00 76	1.32 0.6
3 DN80	x	1½[5] DN40	3.50 89	2.2 1.0
		2[5] DN50	3.50 89	2.2 1.0
4 DN100	x	1½[5] DN40	4.00 102	3.9 1.8
		2[5] DN50	4.00 102	3.5 1.6
		2½[5] DN40	4.00 102	4.6 2.1
		3[5] DN80	4.00 102	4.4 2.0
6 DN150	x	2[5] DN50	5.50 140	7.8 3.6
		3[5] DN80	5.50 140	9.9 44.9
		4 DN100	5.50 140	7.3 3.3
8 DN200	x	4 DN100	6.00 152	15.7 7.1
		6 DN150	6.00 152	17.9 8.1
10 DN250	x	4 DN100	7.00 178	24.0 10.9
		6 DN150	7.00 178	26.9 12.2
		8 DN200	7.00 178	29.2 13.2

[5] Schedule 80 wall thickness. For other wall thickness options, contact Victaulic

NOTE
- Outlets 12"/DN300 and smaller will be provided with OGS grooves.

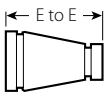

Nominal Size inches DN			E to E inches mm	Approximate Weight (Each) lb kg
12 DN300	x	8 DN200	8.00 203	26.6 12.1
		10 DN250	8.00 203	43.5 19.7
AGS™			No. LW50 AGS Concentric Reducer	
14 DN350	x	8 DN200	14.00 356	90.0 40.8
		10 DN250	14.00 356	96.0 43.5
		12 DN300	14.00 356	105.0 47.6
16 DN400	x	8 DN200	14.00 356	104.0 47.2
		10 DN250	14.00 356	108.0 49.0
		12 DN300	14.00 356	112.0 50.8
		14 DN350	14.00 356	116.0 52.6

[5] Schedule 80 wall thickness. For other wall thickness options, contact Victaulic

NOTE
- Outlets 12"/DN300 and smaller will be provided with OGS grooves.

 © 2021 Victaulic Company. All rights reserved.

4.6 DIMENSIONS

No. L51 Eccentric Reducer
No. LW51 AGS Eccentric Reducer

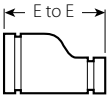

Nominal Size inches DN			No. L51 Eccentric Reducer	
			E to E inches mm	Approximate Weight (Each) lb kg
2 DN50	x	1½[5] DN40	3.00 76	1.0 0.5
3 DN80	x	1½[5] DN40	3.50 89	2.9 1.3
		2[5] DN50	3.50 89	2.2 1.0
4 DN100	x	1½[5] DN40	4.00 102	4.2 1.9
		2[5] DN50	4.00 102	3.4 1.5
		3[5] DN80	4.00 102	4.1 1.9
6 DN150	x	2[5] DN50	5.50 140	8.8 4.0
		3[5] DN80	5.50 140	9.1 4.1
		4 DN100	5.50 140	10.3 4.7
8 DN200	x	4 DN100	6.00 152	11.7 5.3
		6 DN150	6.00 152	12.7 5.8
10 DN250	x	6 DN150	7.00 178	19.1 8.7
		8 DN200	7.00 178	19.8 9.0
12 DN300	x	8 DN200	8.00 203	40.2 18.2
		10 DN250	8.00 203	31.7 14.4
AGS™			No. LW51 AGS Eccentric Reducer	
14 DN350	x	8 DN200	14.00 356	100.0 45.4
		12 DN300	14.00 356	124.0 56.2
16 DN400	x	8 DN200	14.00 356	132.0 59.9
		10 DN250	14.00 356	138.0 62.6

[5] Schedule 80 wall thickness. For other wall thickness options, contact Victaulic

NOTE

- Outlets 12"/DN300 and smaller will be provided with OGS grooves.

 © 2021 Victaulic Company. All rights reserved.

4.7 DIMENSIONS

No. L52 Threaded Reducer (Female - NPT)

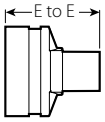

Nominal Size inches DN			E to E inches mm	Approximate Weight (Each) lb kg
1 ½ DN40	x	¾[5] DN20	2.50 64	1.0 0.5
		1[5] DN25	2.50 63.5	1.0 0.5
2 DN50	x	¾[5] DN20	2.50 64	1.4 0.6
		1[5] DN25	2.50 64	1.3 0.6
		1 ½[5] DN40	2.50 64	1.3 0.6

[5] Schedule 80 wall thickness. For other wall thickness options, contact Victaulic

4.8 DIMENSIONS

NO. L60 CAP
NO. LW60 AGS CAP

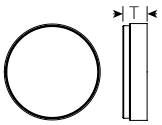

Nominal Size inches DN	Actual Outside Diameter inches mm	"T" Thickness inches mm	Approximate Weight (Each) lb kg
1 ½ DN40	1.900 48.3	0.82 20.8	0.5 0.2
2 DN50	2.375 60.3	0.88 22.4	0.8 0.4
3 DN80	3.500 88.9	0.88 22.4	1.8 0.8
4 DN100	4.500 114.3	1.00 25.4	3.7 1.7
6 DN150	6.625 168.3	1.00 25.4	8.3 3.8
8 DN1200	8.625 219.1	1.13 28.7	15.8 7.2
10 DN250	10.750 273.0	1.06 26.9	28.0 12.7
12 DN300	12.750 323.9	1.25 31.8	41.6 18.9
AGS™		No. LW60 AGS Cap	
14 DN350	14.000 355.6	6.50 165.0	33.2 15.1
16 DN400	16.000 406.4	7.00 178.0	41.2 18.7

NOTE

- End caps are available with an NPT/BSPT tapped port. For more information, contact Victaulic.

 © 2021 Victaulic Company. All rights reserved.

4.9 DIMENSIONS

No. L920N Mechanical T-Outlet (Female – NPT)

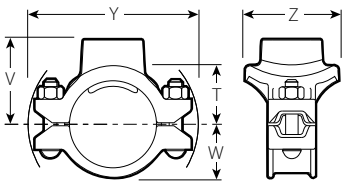

2 – 12"/DN50 – DN300

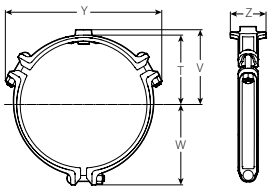

14 – 16"/DN350 – DN400

Nominal Size inches DN		Maximum Working Pressure[7] psi bar	Dimensions: Hole Diameter +0.13 -0.00 inches mm	T[8] inches mm	V inches mm	W inches mm	Y inches mm	Z inches mm	Weight: Approximate (Each) lb kg
2 DN50	x ½ DN15	500 34	1.50 38.1	1.97 50	2.53 64	1.61 41	5.35 136	2.75 70	3.3 1.5
	¾ DN20	500 34	1.50 38.1	1.97 50	2.53 64	1.61 41	5.35 136	2.75 70	3.1 1.4
	1 DN40	500 34	1.50 38.1	1.85 47	2.53 64	1.61 41	5.35 136	2.75 70	3.0 1.4
3 DN80	x ¾ DN20	500 34	1.50 38.1	2.49 63	3.05 78	2.28 58	6.15 156	2.75 70	3.4 1.6
	1 DN40	500 34	1.50 38.1	2.38 61	3.06 78	2.28 58	6.15 156	2.75 70	3.3 1.6
4 DN100	x ½ DN15	500 34	1.50 38.1	3.03 77	3.56 90	2.69 68	7.01 178	2.75 70	3.7 1.8
	¾ DN20	500 34	1.50 38.1	3.00 76	3.56 90	2.69 68	7.01 178	2.75 70	3.7 1.8
	1 DN40	500 34	1.50 38.1	2.88 73	3.56 90	2.69 68	7.01 178	2.75 70	3.7 1.7
6 150	x ¾ DN20	500 34	1.50 38.1	3.73 95	4.64 118	3.79 96	9.15 232	3.25 83	5.1 2.3
	1 ½ DN40	500 34	2.00 50.8	4.40 112	5.13 130	3.79 96	9.15 232	3.25 83	5.7 2.6
	2 DN50	500 34	2.50 63.5	4.38 111	5.13 130	3.79 96	9.15 232	3.88 99	6.5 2.9
8 DN200	x ¾ DN20	500 34	1.50 38.1	5.01 127.3	5.69 144.5	4.81 122.2	12.42 315.5	4.50 114	11.3 5.1
	2 DN50	500 34	2.75 69.9	5.44 138	6.19 157	4.81 122	12.42 316	4.50 114	11.6 5.3
10 DN250	x ¾ DN20	500 34	1.50 38.1	6.01 152.7	6.69 170.0	6.00 152.4	14.67 372.6	4.50 114	16.5 7.5
	1 ½ DN40	500 34	2.75 69.9	6.01 152.7	6.69 170.0	6.00 152.4	14.67 372.6	4.50 114	15.2 6.9
12 DN300	x ¾ DN20	500 34	1.50 38.1	7.13 181.1	7.81 198.4	7.13 181.1	17.38 441.5	4.50 114	19.4 8.8
	1 ½ DN40	500 34	2.75 69.9	7.13 181.1	7.81 198.4	7.13 181.1	17.38 441.5	4.50 114	20.5 9.3
14 DN350	x ¾ DN20	500 34	1.50 38.1	7.75 196.9	8.43 214.1	9.11 231.4	17.95 455.9	4.50 114	24.2 11.0
	1 ½ DN40	500 34	2.75 69.9	7.75 196.9	8.43 214.1	9.11 231.4	17.95 455.9	4.50 114	24.2 11.0
16 DN400	x ¾ DN20	500 34	1.50 38.1	8.75 222.3	9.43 239.5	10.14 257.6	19.74 501.4	4.50 114	26.6 12.1

7 Presure ratings listed are on Schedules 10 and 40 carbon steel pipe.

8 Center of run to engaged pipe end (dimensions approximate).

NOTE

- WARNING: FOR ONE-TIME FIELD TEST ONLY, Maximum Joint Working Pressure may be increased to 1 ½ times the figures shown

 © 2021 Victaulic Company. All rights reserved.

4.10 DIMENSIONS

No. TRU Grooved End Trunnion Fittings

Fabricated custom pipe supports can be supplied with tees, elbows, or as straight pipe configurations. For additional information, contact Victaulic with detailed specifications.

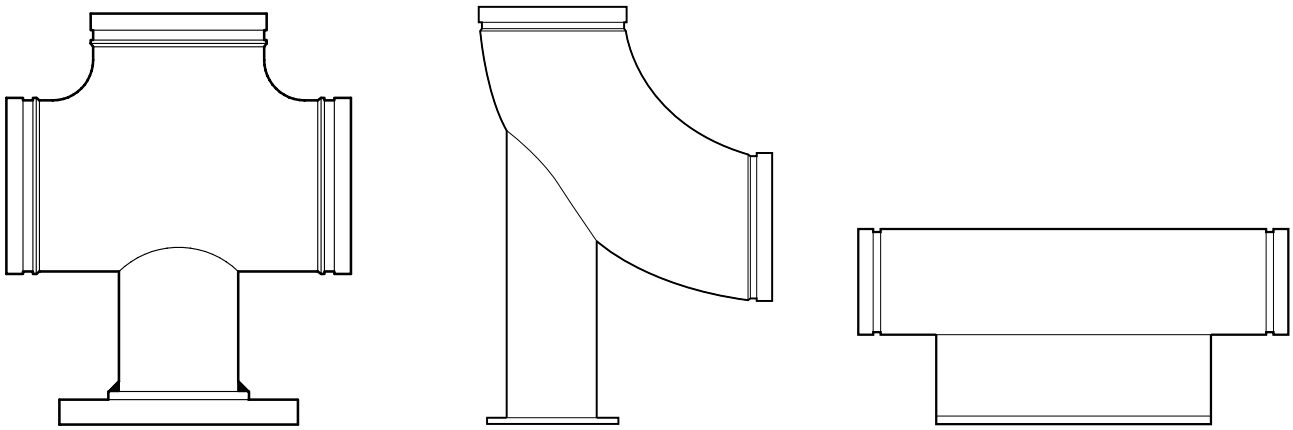

 © 2021 Victaulic Company. All rights reserved.

5.0 PERFORMANCE

Style L07 Rigid Coupling
Style LW07 AGS Rigid Coupling

Size		Maximum Working Pressure[9]	Maximum End Load[9]
Nominal Size inches DN	**Actual Outside Diameter** inches mm	psi kPa	lb N
1 ½ DN40	1.900 48.3	750 5171	2109 9381
2 DN50	2.375 60.3	750 5171	3286 14617
2 ½	2.875 73.0	750 5171	4825 21463
3 DN80	3.500 88.9	750 5171	7136 31743
4 DN100	4.500 114.3	750 5171	11793 52458
6 DN150	6.625 168.3	750 5171	25402 112994
8 DN200	8.625 219.1	750 5171	43544 193693
10 DN250	10.750 273	750 5171	66620 296341
12 DN300	12.750 323.9	750 5171	94360 419734
LW07 AGS Rigid Coupling			
14 DN350	14.000 355.6	740 5102	117481 522582
16 DN400	16.000 406.4	740 5102	153455 682602

[9] Working Pressure and End Load are total, from all internal and external loads, based on standard weight (ANSI) steel pipe, standard roll or cut grooved in accordance with Victaulic specifications.

NOTE

- WARNING: FOR ONE TIME FIELD TEST ONLY, the Maximum Joint Working Pressure may be increased to 1½ times the figures shown.

 © 2021 Victaulic Company. All rights reserved.

5.1 PERFORMANCE

Style L77

Size		Working Pressure[9]	End Load[9]
Nominal inches mm	**Actual Outside Diameter** inches mm	**Maximum** psi kPa	**Maximum** lb N
1½ DN40	1.900 48.3	1000 6894	2835 12,615
2 DN50	2.375 60.3	1000 6894	4430 19,715
2½	2.875 73.0	1000 6894	6490 28,880
3 DN80	3.500 88.9	1000 6894	9620 42,810
4 DN100	4.500 114.3	1000 6894	15900 70,755
6 DN150	6.625 168.3	1000 6894	34470 153,390
8 DN200	8.625 219.1	800 5515	46740 207,995
10 DN250	10.750 273.0	800 5515	73280 326,100
12 DN300	12.750 323.9	800 5515	102000 453,900

[9] Working Pressure and End Load are total, from all internal and external loads, based on standard weight (ANSI) steel pipe, standard roll or cut grooved in accordance with Victaulic specifications.

NOTE

- WARNING: FOR ONE TIME FIELD TEST ONLY, the Maximum Joint Working Pressure may be increased to 1½ times the figures shown.

 © 2021 Victaulic Company. All rights reserved.

6.0 NOTIFICATIONS

WARNING

- **Read and understand all instructions before attempting to install, remove, adjust, or maintain any Victaulic piping products.**
- **Depressurize and drain the piping system before attempting to install, remove, adjust, or maintain any Victaulic piping products.**
- **Wear safety glasses, hardhat, and foot protection.**

Failure to follow these instructions could result in death or serious personal injury and property damage.

7.0 REFERENCE MATERIALS

05.01: Victaulic Gasket Selection Guide
07.01: Grooved End Fitting Submittal
20.05: Victaulic AGS Grooved End Fittings Submittal
24.01: Victaulic Pipe Preparation Tool Specifications
25.01: Victaulic Standard Groove Specifications
25.09: Victaulic AGS Roll Groove Specifications
I-ENDCAP: Victaulic End Caps Installation Instructions
I-100: Victaulic Field Installation Handbook for Carbon Steel
I-IMPACT: Victaulic Impact Tool Usage Guidelines

User Responsibility for Product Selection and Suitability
Each user bears final responsibility for making a determination as to the suitability of Victaulic products for a particular end-use application, in accordance with industry standards and project specifications, and the applicable building codes and related regulations as well as Victaulic performance, maintenance, safety, and warning instructions. Nothing in this or any other document, nor any verbal recommendation, advice, or opinion from any Victaulic employee, shall be deemed to alter, vary, supersede, or waive any provision of Victaulic Company's standard conditions of sale, installation guide, or this disclaimer.

Intellectual Property Rights
No statement contained herein concerning a possible or suggested use of any material, product, service, or design is intended, or should be constructed, to grant any license under any patent or other intellectual property right of Victaulic or any of its subsidiaries or affiliates covering such use or design, or as a recommendation for the use of such material, product, service, or design in the infringement of any patent or other intellectual property right. The terms "Patented" or "Patent Pending" refer to design or utility patents or patent applications for articles and/or methods of use in the United States and/or other countries.

Note
This product shall be manufactured by Victaulic or to Victaulic specifications. All products to be installed in accordance with current Victaulic installation/assembly instructions. Victaulic reserves the right to change product specifications, designs and standard equipment without notice and without incurring obligations.

Installation
Reference should always be made to the Victaulic installation handbook or installation instructions of the product you are installing. Handbooks are included with each shipment of Victaulic products, providing complete installation and assembly data, and are available in PDF format on our website at www.victaulic.com.

Warranty
Refer to the Warranty section of the current Price List or contact Victaulic for details.

Trademarks
Victaulic and all other Victaulic marks are the trademarks or registered trademarks of Victaulic Company, and/or its affiliated entities, in the U.S. and/or other countries.

51.01 14257 Rev C Updated 05/2021 © 2021 Victaulic Company. All rights reserved.

Victaulic® Standard Flexible Coupling Style 77

¾ – 12"/DN20 – DN300 sizes

14 – 24"/DN350 – DN600 sizes

1.0 PRODUCT DESCRIPTION

Available Sizes

- ¾ – 24"/DN20 – DN600

Maximum Working Pressure

- Accommodates pressures ranging from full vacuum (29.9 in Hg/760 mm Hg) up to 1000 psi/6894 kPa
- Working pressure dependent on material, wall thickness and size of pipe

Application

- Joins standard roll grooved and cut grooved pipe, as well as grooved fittings, valves and accessories
- Provides a flexible pipe joint which allows for expansion, contraction and deflection
- Operating temperature dependent upon gasket and/or seal selection – see Section 3.0
- Exclusively for use with pipe and Victaulic products which feature ends formed with the Victaulic OGS groove profile (see Section 7.0 for Reference Materials)

Pipe Material

- Carbon Steel
- For use with stainless steel pipe, refer to Victaulic Publication 17.09 for pressure ratings and end loads

2.0 CERTIFICATIONS/LISTINGS

c UL us LISTED	FM APPROVED	VdS	LPCB	CE	UK CA
		G4900051	LPS 1219: Issue 3.1 Cert/LPCB Ref. 104-1a/04	EN 10311 CPR (EU) No. 305/2011	BS EN 10311 CPR (UK) 2019 No. 465

NOTE

- See Publication 02.06: Victaulic Potable Water Approvals ANSI/NSF/CAN for potable water approvals if applicable.
- See Publication 10.01: Victaulic Certification Reference Guide for fire protection ratings and other certification/listing information.

ALWAYS REFER TO ANY NOTIFICATIONS AT THE END OF THIS DOCUMENT REGARDING PRODUCT INSTALLATION, MAINTENANCE OR SUPPORT.

 © 2025 Victaulic Company. All rights reserved.

3.0 MATERIAL SPECIFICATIONS

Housing: Ductile Iron conforming to ASTM A536, Grade 65-45-12. Ductile Iron conforming to ASTM A395, Grade 65-45-15, is available upon special request.

Housing Coating: (specify choice)

- ☐ Standard: Orange Enamel
- ☐ Optional: Hot Dipped Galvanized and others
- ☐ Optional: Contact Victaulic with your requirements for other coatings.

Gasket: (specify choice[1])

☐ **Grade "E" EPDM**

EPDM (Green stripe color code). Temperature range –30°F to +230°F/–34°C to +110°C. May be specified for cold and hot water service within the specified temperature range plus a variety of dilute acids, oil-free air and many chemical services. UL Classified in accordance with ANSI/NSF 61 for cold +73°F/+23°C and hot +180°F/+82°C potable water service and ANSI/NSF 372. NOT COMPATIBLE FOR PETROLEUM SERVICES OR STEAM SERVICES.

☐ **Grade "T" Nitrile**

Nitrile (Orange stripe color code). Temperature range -20°F to +180°F/-29°C to +82°C. May be specified for petroleum products, air with oil vapors, vegetable and mineral oils within the specified temperature range. Not compatible for hot water services over +150°F/+66°C or for hot dry air over +140°F/+60°C.

☐ **Others**

For alternate gasket selection, reference Publication 05.01: Victaulic Seal Selection Guide - Elastomeric Seal Construction.

[1] Services listed are General Service Guidelines only. It should be noted that there are services for which these gaskets are not compatible. Reference should always be made to the latest Victaulic Seal Selection Guide for specific gasket service guidelines and for a listing of services which are not compatible.

Bolts/Nuts: (specify choice[2])

- ☐ Standard: Carbon steel oval neck track bolts meeting the mechanical property requirements of (imperial) ASTM A449 or (metric) ISO 898-1 Class 9.8 (M10-M16) or Class 8.8 (M20 and greater). Carbon steel hex nuts meeting the mechanical property requirements of (imperial heavy hex nuts) ASTM A563 Grade B or (metric hex nuts) ISO 898-2 Class 10 (M12-M16) or Class 8 (M20 and greater). Track bolts and hex nuts are zinc electroplated per ASTM B633 Fe/Zn5 finish (imperial) Type III or (metric) Type II.
- ☐ Optional: Stainless steel oval neck track bolts meeting the mechanical property requirements of ASTM F593, Group 2 (316 stainless steel), condition CW. Stainless steel heavy hex nuts meeting the mechanical property requirements of ASTM F594, Group 2 (316 stainless steel), condition CW, with galling reducing coating.

[2] Optional bolts/nuts are available in imperial size only.

 © 2025 Victaulic Company. All rights reserved.

4.0 DIMENSIONS

Style 77

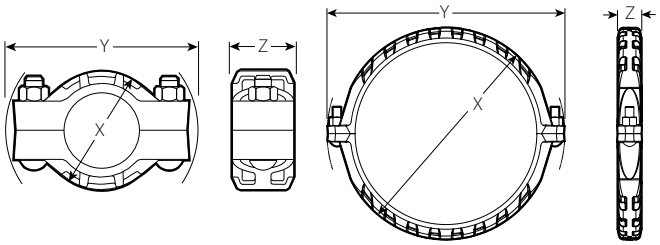

¾ – 12"/DN20 – DN300 sizes 14 – 24"/DN350 – DN600 sizes

Size		Pipe End Separation[3]	Deflection from Centerline[3]		Bolt/Nut		Dimensions			Weight
Nominal inches DN	Actual Outside Diameter inches mm	Allowable inches mm	Per Cplg. Degrees	Pipe inches/ft. mm/m	Qty.	Size inches	X inches mm	Y inches mm	Z inches mm	Approx. (Each) lb kg
¾ DN20	1.050 26.9	0–0.06 0–1.5	3°–24′	0.72 60	2	⅜ x 2	2.13 54	4.00 102	1.75 44	1.1 0.5
1 DN25	1.315 33.7	0–0.06 0–1.5	2°–43′	0.57 47	2	⅜ x 2	2.38 60	4.12 104	1.75 44	1.2 0.5
1¼ DN32	1.660 42.4	0–0.06 0–1.5	2°–10′	0.45 37	2	½ x 2½	2.65 68	5.00 128	1.88 48	2.0 0.9
1½ DN40	1.900 48.3	0–0.06 0–1.5	1°–56′	0.40 33	2	½ x 2½	3.13 80	5.38 136	1.88 48	2.1 1.0
	2.244 57.0	0–0.06 0–1.5	1°–34′	0.33 27	2	½ x 2½	3.43 88	5.73 146	1.90 48	3.0 1.4
2 DN50	2.375 60.3	0–0.06 0–1.5	1°–31′	0.32 27	2	½ x 2½	3.63 92	5.88 150	1.88 48	2.6 1.2
2½	2.875 73.0	0–0.06 0–1.5	1°–15′	0.26 22	2	½ x 2¾	4.25 108	6.50 166	1.88 48	3.1 1.4
DN65	3.000 76.1	0–0.06 0–1.5	1°–12′	0.26 22	2	½ x 2¾	4.38 112	6.63 168	1.88 48	3.2 1.5
3 DN80	3.500 88.9	0–0.06 0–1.5	1°–2′	0.22 18	2	½ x 2¾	5.00 128	7.13 182	1.88 48	3.7 1.7
3½ DN90	4.000 101.6	0–0.06 0–1.5	0°–54′	0.19 16	2	⅝ x 3¼	5.63 144	8.25 210	1.88 48	5.6 2.5
	4.250 108.0	0–0.13 0–3.3	1°–41′	0.35 29	2	M16 x 83	6.00 152	8.63 220	2.13 54	6.2 2.8
4 DN100	4.500 114.3	0–0.13 0–3.3	1°–36′	0.34 28	2	⅝ x 3¼	6.13 156	8.88 226	2.13 54	6.7 3.0
4½	5.000 127.0	0–0.13 0–3.3	1°–26′	0.30 25	2	¾ x 4¼	7.25 184	10.13 258	2.13 54	10.0 4.5
	5.250 133.0	0–0.13 0–3.3	1°–21′	0.28 23	2	M20 x 108	7.63 194	10.38 264	2.13 54	10.0 4.5
DN125	5.500 139.7	0–0.13 0–3.3	1°–18′	0.28 23	2	M20 x 108	8.63 220	10.65 270	2.13 54	10.0 4.5
5	5.563 141.3	0–0.13 0–3.3	1°–18′	0.27 22	2	¾ x 4¼	7.75 196	10.65 270	2.13 54	10.6 4.8
	6.250 159.0	0–0.13 0–3.3	1°–9′	0.24 20	2	M20 x 108	8.63 220	11.50 292	2.13 54	13.2 6.0
	6.500 165.1	0–0.13 0–3.3	1°–6′	0.23 19	2	¾ x 4¼	8.88 226	11.63 296	2.13 54	13.2 6.0
6 DN150	6.625 168.3	0–0.13 0–3.3	1°–5′	0.23 19	2	¾ x 4¼	8.63 220	11.88 302	2.13 54	12.0 5.4

3 Allowable Pipe End Separation and Deflection figures show the maximum nominal range of movement available at each joint for standard **roll** grooved pipe. Figures for standard **cut** grooved pipe may be doubled. These figures are maximums; for design and installation purposes these figures should be reduced by: 50% for ¾ – 3 ½"/DN20 – DN90; 25% for 4"/DN100 and larger.

NOTE

- Metric thread size bolts are available (color coded gold) for all coupling sizes upon request. Contact Victaulic for details.

 © 2025 Victaulic Company. All rights reserved.

4.0 DIMENSIONS (CONTINUED)

Style 77

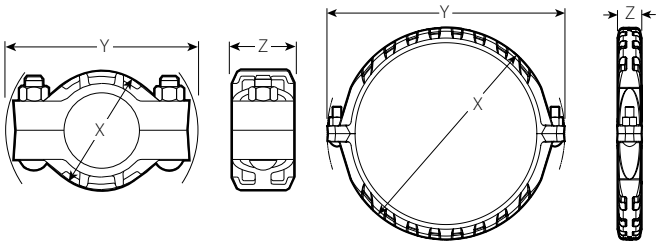

¾ – 12"/DN20 – DN300 sizes 14 – 24"/DN350 – DN600 sizes

Size		Pipe End Separation[3]	Deflection from Centerline[3]		Bolt/Nut		Dimensions			Weight
Nominal inches DN	Actual Outside Diameter inches mm	Allowable inches mm	Per Cplg. Degrees	Pipe inches/ft. mm/m	Qty.	Size inches	X inches mm	Y inches mm	Z inches mm	Approx. (Each) lb kg
8[4] DN200	8.625 219.1	0–0.13 0–3.3	0º–50′	0.18 15	2	⅞ x 5	11.00 280	14.75 374	2.50 64	20.8 9.4
10[4] DN250	10.750 273.0	0–0.13 0–3.3	0º–40′	0.14 12	2	1 x 6	13.63 346	17.13 436	2.63 66	27.8 12.5
12[4] DN300	12.750 323.9	0–0.13 0–3.3	0º–34′	0.12 10	2	1 x 6½	15.63 398	19.25 488	2.63 66	31.1 14.0
14[5] DN350	14.000 355.6	0–0.13 0–3.3	0º–31′	0.11 9	2	1 x 3½	16.75 426	20.25 514	3.00 76	39.2 18.0
	14.843 377.0	0–0.13 0–3.3	0º–31′	0.11 9	2	1 x 3½	17.39 442	20.96 532	2.80 72	48.8 22.0
16[5] DN400	16.000 406.4	0–0.13 0–3.3	0º–27′	0.10 8	2	1 x 3½	18.75 476	22.25 566	3.00 76	45 20.5
	16.772 426.0	0–0.13 0–3.3	0º–27′	0.10 8	2	1 x 3½	19.69 500	22.92 582	2.92 74	56.7 25.5
18[5] DN450	18.000 457.2	0–0.13 0–3.3	0º–24′	0.08 7	2	1⅛ x 4	21.56 548	25.00 636	3.13 80	64.1 29.0
	18.898 480.0	0–0.13 0–3.3	0º–24′	0.08 7	2	1⅛ x 4	22.38 568	25.86 656	3.04 78	77.2 35.0
20[5] DN500	20.000 508.0	0–0.13 0–3.3	0º–22′	0.08 7	2	1⅛ x 4	23.63 600	27.00 686	3.13 80	74.8 34.0
	20.866 530.0	0–0.13 0–3.3	0º–22′	0.08 7	2	1⅛ x 4	24.29 616	27.80 706	3.07 78	91.7 41.5
22[5] DN550	22.000 558.8	0–0.13 0–3.3	0º–19′	0.07 6	2	1⅛ x 4	25.63 652	29.13 740	3.13 80	82.6 37.5
	22.835 580.0	0–0.13 0–3.3	0º–19′	0.07 6	2	1⅛ x 4	26.76 680	30.01 762	3.12 80	92.8 42.0
24[5] DN600	24.000 609.6	0–0.13 0–3.3	0º–18′	0.07 6	2	1⅛ x 4	27.75 704	31.00 788	3.19 82	89.6 40.5
	24.803 630.0	0–0.13 0–3.3	0º–18′	0.07 6	2	1⅛ x 4	28.42 722	32.16 816	3.12 80	96.8 44.0
14–72 DN350–DN1800	14.000–72.0 / 355.6–1828.8	**AGS See Style W77, refer to Victaulic** Publication 20.03 AGS™								

3 Allowable Pipe End Separation and Deflection figures show the maximum nominal range of movement available at each joint for standard **roll** grooved pipe. Figures for standard **cut** grooved pipe may be doubled. These figures are maximums; for design and installation purposes these figures should be reduced by: 50% for ¾ – 3 ½"/DN20 – DN90; 25% for 4"/DN100 and larger.

4 Couplings 8, 10, 12"/DN200, DN250, DN300 sizes available to JIS standards. Refer to Victaulic Publication 06.17 for details.

5 For 14 – 72"/DN350 – DN1800 Roll Groove systems Victaulic offers the Advanced Groove System (AGS) line of products. Refer to Victaulic Publication 20.03 for information on the Style W77 flexible AGS coupling.

NOTE

- Metric thread size bolts are available (color coded gold) for all coupling sizes upon request. Contact Victaulic for details.

 © 2025 Victaulic Company. All rights reserved.

5.0 PERFORMANCE

Style 77

Size		Working Pressure[6]	End Load[6]
Nominal inches DN	**Actual Outside Diameter** inches mm	**Maximum** psi kPa	**Maximum** lb N
¾ DN20	1.050 26.9	1000 6895	865 3848
1 DN25	1.315 33.7	1000 6895	1360 6050
1¼ DN32	1.660 42.4	1000 6895	2160 9608
1½ DN40	1.900 48.3	1000 6895	2835 12,610
	2.244 57.0	1000 6895	4430 19,706
2 DN50	2.375 60.3	1000 6895	3955 17,592
2½	2.875 73.0	1000 6895	6490 28,868
DN65	3.000 76.1	1000 6895	7070 31,448
3 DN80	3.500 88.9	1000 6895	9620 42,792
3½ DN90	4.000 101.6	1000 6895	12,565 55,892
	4.250 108.0	1000 6895	14,180 63,076
4 DN100	4.500 114.3	1000 6895	15,900 70,726
4½	5.000 127.0	1000 6895	19,650 87,408
	5.250 133.0	1000 6895	21,635 96,238
DN125	5.500 139.7	1000 6895	23,745 105,624
5	5.563 141.3	1000 6895	24,300 108,092
	6.250 159.0	1000 6895	30,665 136,404
	6.500 165.1	1000 6895	33,185 147,614

[6] Working Pressure and End Load are total, from all internal and external loads, based on standard weight (ANSI) steel pipe, standard roll or cut grooved in accordance with Victaulic specifications. Contact Victaulic for performance on other pipe.

NOTE

- WARNING: FOR ONE TIME FIELD TEST ONLY, the Maximum Joint Working Pressure may be increased to 1½ times the figures shown.

 © 2025 Victaulic Company. All rights reserved.

5.0 PERFORMANCE (CONTINUED)

Style 77

Size		Working Pressure[6]	End Load[6]
Nominal inches DN	**Actual Outside Diameter** inches mm	**Maximum** psi kPa	**Maximum** lb N
6 DN150	6.625 168.3	1000 6895	34,470 153,330
8[4] DN200	8.625 219.1	800 5516	46,740 207,910
10[4] DN250	10.750 273.0	800 5516	73,280 325,966
12[4] DN300	12.750 323.9	800 5516	102,000 453,718
14[5] DN350	14.000 355.6	300 2068	46,180 205,418
	14.843 377.0	300 2068	51,875 230,752
16[5] DN400	16.000 406.4	300 2068	60,320 268,316
	16.772 426.0	300 2068	66,245 294,672
18[5] DN450	18.000 457.2	300 2068	76,340 339,578
	18.898 480.0	300 2068	84,105 374,118
20[5] DN500	20.000 508.0	300 2068	94,000 418,132
	20.866 530.0	300 2068	102,500 455,940
22[5] DN550	22.000 558.8	300 2068	114,000 507,098
	22.835 580.0	300 2068	122,850 546,464
24[5] DN600	24.000 609.6	250 1724	113,000 502,650
	24.803 630.0	250 1724	102,790 457,232
14–72 DN350–DN1800	14.000–72.000 355.6–1828.8	AGS See Style W77, refer to Victaulic Publication 20.03 AGS™	

4 Couplings 8, 10, 12"/DN200, DN250, DN300 sizes available to JIS standards. Refer to Victaulic Publication 06.17 for details.

5 For 14 – 72"/DN350 – DN1800 Roll Groove systems Victaulic offers the Advanced Groove System (AGS) line of products. Refer to Victaulic Publication 20.03 for information on the Style W77 flexible AGS coupling.

6 Working Pressure and End Load are total, from all internal and external loads, based on standard weight (ANSI) steel pipe, standard roll or cut grooved in accordance with Victaulic specifications. Contact Victaulic for performance on other pipe.

NOTE

- WARNING: FOR ONE TIME FIELD TEST ONLY, the Maximum Joint Working Pressure may be increased to 1½ times the figures shown.

 © 2025 Victaulic Company. All rights reserved.

6.0 NOTIFICATIONS

- For 14 – 72"/DN350 – DN1800 flexible roll groove systems, Victaulic recommends Style W77 AGS couplings. For more information, refer to Victaulic Publication 20.03.

⚠ WARNING

- **Read and understand all instructions before attempting to install any Victaulic products.**
- **Always verify that the piping system has been completely depressurized and drained immediately prior to installation, removal, adjustment, or maintenance of any Victaulic products.**
- **Confirm that any equipment, branch lines, or sections of piping that may have been isolated for/during testing or due to valve closures/ positioning are identified, depressurized, and drained immediately prior to installation, removal, adjustment, or maintenance of any Victaulic products.**
- **Always read and follow the I-ENDCAP, Victaulic End Cap Installation Safety Instructions, which can be downloaded at Victaulic.com.**
- **Wear safety glasses, hardhat, foot protection, and hearing protection.**

Failure to follow these instructions could result in death or serious personal injury and property damage.

⚠ WARNING

- **Victaulic RX roll sets must be used when grooving light-wall/thin-wall stainless steel pipe for use with Victaulic Couplings.**

Failure to use Victaulic RX roll sets when grooving light-wall/thin-wall stainless steel pipe may cause joint failure, resulting in serious personal injury and/or property damage.

NOTICE

- **Victaulic RX grooving rolls must be ordered separately. They are identified by a silver color and the designation RX on the front of the roll sets.**

7.0 REFERENCE MATERIALS

I-100: Victaulic Field Installation Handbook
02.06: Victaulic Potable Water Approvals NSF/ANSI/CAN
05.01: Victaulic Seal Selection Guide
06.15: Victaulic Pressure Ratings and End Loads for Victaulic® Couplings on Steel Pipe
06.17: Victaulic Couplings and Fittings for JIS Pipe
10.01: Victaulic Certification Reference Guide–General Catalog Products
17.01: Victaulic Stainless Steel Pipe End Preparation
17.09: Victaulic Grooved Couplings Performance Data for Stainless Steel Pipe
20.03: Victaulic AGS Flexible Coupling Style W77/W77B
25.01: Victaulic Original Groove System (OGS) Groove Specifications
26.01: Victaulic Design Data
26.04: Victaulic Couplings Vibration Attenuation Characteristics
29.01: Victaulic Terms and Conditions of Sale/Warranty
I-ENDCAP: Victaulic End Cap Installation Safety Instructions

User Responsibility for Product Selection and Suitability
Each user bears final responsibility for determining the suitability of Victaulic products for their end-use application, in accordance with industry standards, project specifications, and Victaulic's published performance, maintenance, and safety data, as well as all warnings and installation instructions. Nothing in this or any other document, nor any verbal recommendation, advice, or opinion from any Victaulic employee, shall be deemed to alter, vary, supersede, or waive any provision of Victaulic Company's standard conditions of sale, warranty, installation instructions, or this disclaimer.

Installation
Always refer to and follow the Victaulic Installation Handbook or installation instructions for the product you are installing. Handbooks are included with each shipment of Victaulic products, providing complete installation and assembly data, and are available in PDF format on our website at victaulic.com.

Warranty
Refer to the Warranty section of the current Price List or contact Victaulic for details.

Intellectual Property Rights
No statement concerning the use of any material, product, service, or design is intended, or should be construed, to grant any license under any patent or other intellectual property right of Victaulic or any of its affiliates, or as a recommendation for the use of such material, product, service, or design in the infringement of any patent or other intellectual property right. The terms "Patented" or "Patent Pending" refer to design or utility patents or patent applications for articles and/or methods of use in the United States and/or other countries. Victaulic and all other Victaulic marks are the trademarks or registered trademarks of Victaulic Company, and/or its affiliated entities, in the U.S. and/or other countries.

Note
All products bearing a Victaulic trademark are manufactured by Victaulic or to Victaulic specifications. All products are to be installed only in accordance with the applicable Victaulic installation instructions. Victaulic reserves the right to change product specifications, designs and standard equipment without notice and without incurring obligations.

 © 2025 Victaulic Company. All rights reserved.

Class 125 (Standard)

FIGURE 351
90° Elbow

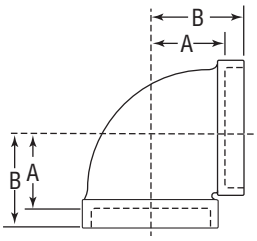

Size		A		B		Unit Weight Black	
NPS	*DN*	in	*mm*	in	*mm*	lbs	*kg*
1/4	*8*	1/2	*13*	13/16	*22*	0.16	*0.07*
3/8	*10*	9/16	*14*	15/16	*24*	0.25	*0.11*
1/2	*15*	11/16	*17*	1 1/8	*29*	0.40	*0.18*
3/4	*20*	13/16	*22*	1 15/16	*33*	0.60	*0.27*
1	*25*	15/16	*24*	1 1/2	*38*	0.92	*0.42*
1 1/4	*32*	1 1/8	*29*	1 3/4	*44*	1.44	*0.65*
1 1/2	*40*	1 5/16	*33*	1 15/16	*49*	1.95	*0.88*
2	*50*	1 9/16	*40*	2 1/4	*57*	3.13	*1.42*
2 1/2	*65*	1 13/16	*47*	2 11/16	*68*	4.94	*2.24*
3	*80*	2 3/16	*56*	3 1/8	*79*	7.21	*3.27*
3 1/2	*90*	2 7/16	*62*	3 7/16	*87*	9.67	*4.39*
4	*100*	2 11/16	*68*	3 13/16	*98*	12.17	*5.52*
5	*125*	3 5/16	*84*	4 1/2	*114*	21.46	*9.73*
6	*150*	3 7/8	*98*	5 1/8	*130*	31.33	*14.21*
8	*200*	5 3/16	*132*	6 9/16	*167*	64.56	*29.28*

Note: See following page for pressure-temperature ratings.

PROJECT INFORMATION	APPROVAL STAMP
Project:	☐ **Approved**
Address:	☐ **Approved as noted**
Contractor:	☐ **Not approved**
Engineer:	**Remarks:**
Submittal Date:	
Notes 1:	
Notes 2:	

CAST IRON THREADED FITTINGS

Anvil standard and extra heavy cast iron threaded fittings are manufactured in accordance with ASME B16.4. Plugs and bushings are manufactured in accordance with ASME B16.14.

NOTE: Figure 367 Concentric Reducers do not meet the overall length requirement of ASME B16.4. All other dimensions are in compliance.

c UL US

FM APPROVED

For Listings/Approval Details and Limitations, visit our website at www.anvilintl.com or contact an Anvil Sales Representative.

Cast Iron Threaded Fittings Pressure - Temperature Ratings

Temperature		Pressure			
		Class 125		Class 250	
(°F)	*(°C)*	psi	*bar*	psi	*bar*
-20° to 150°	*-28.9 to 65.6*	175	*12.1*	400	*27.6*
200°	*93.3*	165	*11.4*	370	*25.5*
250°	*121.1*	150	*10.3*	340	*23.4*
300°	*148.9*	140	*9.7*	310	*21.4*
350°	*176.7*	125	*8.6*	300	*20.7*
400°	*204.4*	–	–	250	*17.2*

Standards and Specifications

	Dimensions	Material	Galvanizing*	Thread	Pressure Rating
CAST IRON THREADED FITTINGS					
Class 125	ASME B16.4	ASTM A-126 (A)	ASTM A-153	ASME B1.20.1	ASME B16.4
Class 250	ASME B16.4	ASTM A-126 (A)	ASTM A-153	ASME B1.20.1	ASME B16.4
CAST IRON PLUGS AND BUSHINGS					
	ASME B16.14	ASTM A- 126 (A)	ASTM A-153	ASME B1.20.1	ASME B16.14

* ASTM B 633. Type I, SC 4, may be supplied as alternate zinc coating per applicable ASME B16 product standard.

General Assembly of Threaded Fittings

1) Inspect both male and female components prior to assembly.
   - Threads should be free from mechanical damage, dirt, chips and excess cutting oil.
   - Clean or replace components as necessary.
2) Application of thread sealant
   - Use a thread sealant that is fast drying, sets-up to a semi hard condition and is vibration resistant. Alternately, an anaerobic sealant may be utilized.
   - Thoroughly mix the thread sealant prior to application.
   - Apply a thick even coat to the male threads only. Best application is achieved with a brush stiff enough to force sealant down to the root of the threads.
3) Joint Makeup
   - For sizes up to and including 2" pipe, wrench tight makeup is considered three full turns past handtight. Handtight engagement for $^{1}/_{2}$" through 2" thread varies from $4^{1}/_{2}$ turns to 5 turns.
   - For 2 $^{1}/_{2}$" through 4" sizes, wrench tight makeup is considered two full turns past handtight. Handtight engagement for 2 $^{1}/_{2}$" through 4" thread varies from $5^{1}/_{2}$ turns to $6^{3}/_{4}$ turns.

Class 125 (Standard)

FIGURE 352
90° Elbow, Reducing

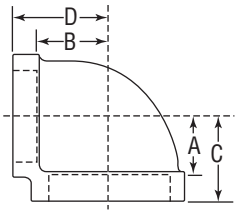

Size				A		B		C		D		Unit Weight Black	
NPS	DN	NPS	DN	in	mm	in	mm	in	mm	in	mm	lbs	kg
1/2	15	1/4	8	5/8	16	3/4	19	1 1/16	27	1 1/16	27	0.40	0.18
		3/8	10	5/8	16	11/16	17	1 1/16	27	1 1/16	27	0.34	0.15
3/4	20	1/2	15	11/16	17	13/16	22	1 1/4	32	1 1/4	32	0.51	0.23
1	25	1/2	15	11/16	17	15/16	24	1 3/8	35	1 3/8	35	0.67	0.30
		3/4	20	13/16	22	15/16	24	1 7/16	37	1 7/16	37	0.76	0.34
1 1/4	32	1/2	15	11/16	17	1 1/16	27	1 1/2	38	1 1/2	38	1.07	0.49
		3/4	20	13/16	22	1 1/8	29	1 5/8	41	1 5/8	41	1.02	0.46
		1	25	15/16	24	1 1/8	29	1 11/16	43	1 11/16	43	1.21	0.55
1 1/2	40	1/2	15	3/4	19	1 1/4	32	1 5/8	41	1 5/8	41	1.53	0.69
		3/4	20	7/8	22	1 5/16	33	1 13/16	47	1 13/16	47	1.55	0.70
		1	25	1	25	1 1/4	32	1 13/16	47	1 13/16	47	1.44	0.65
		1 1/4	32	1 3/16	30	1 1/4	32	1 7/8	48	1 7/8	48	1.74	0.79
2	50	1/2	15	1 3/16	30	1 7/16	37	1 3/8	35	1 3/8	35	2.22	1.01
		3/4	20	1 5/16	33	1 1/2	38	2	51	2	51	2.20	1.00
		1	25	1 1/16	27	1 7/16	37	2	51	2	51	2.08	0.94
		1 1/4	32	1 3/16	30	1 7/16	37	2 1/16	52	2 1/16	52	2.33	1.06
		1 1/2	40	1 5/16	33	1 1/2	38	2 1/8	54	2 1/8	54	2.59	1.17
2 1/2	65	1	25	1	25	1 3/4	44	2 5/16	59	2 5/16	59	2.93	1.33
		1 1/4	32	1 3/16	30	1 3/4	44	2 3/8	60	2 3/8	60	3.41	1.55
		1 1/2	40	1 5/16	33	1 13/16	47	2 7/16	62	2 7/16	62	3.68	1.67
		2	50	1 9/16	40	1 7/8	48	2 9/16	65	2 9/16	65	4.01	1.82
3	80	1 1/4	32	1 5/8	41	2 5/16	59	2 15/16	75	2 15/16	75	5.98	2.71
		1 1/2	40	1 5/8	41	2 5/16	59	2 15/16	75	2 15/16	75	5.65	2.56
		2	50	1 5/8	41	2 1/4	57	2 15/16	75	2 15/16	75	5.25	2.38
		2 1/2	65	1 7/8	48	2 3/16	56	3 1/16	78	3 1/16	78	6.44	2.92
4	100	2	50	2 3/16	56	2 15/16	75	3 5/8	92	3 5/8	92	11.89	5.39
		2 1/2	65	2 3/16	56	2 3/4	70	3 5/8	92	3 5/8	92	11.27	5.11
		3	80	2 3/16	56	2 11/16	68	3 5/8	92	3 5/8	92	10.63	4.82
5	125	4	100	2 13/16	73	3 5/16	84	4 3/8	111	4 3/8	111	16.47	7.47
6	150	3	80	2 5/16	59	3 13/16	98	4 13/16	124	4 13/16	124	19.43	8.81
		4	100	2 13/16	73	3 7/8	98	4 15/16	125	4 15/16	125	23.53	10.67
		5	125	3 3/8	86	3 13/16	98	5	127	5	127	26.66	12.09

Note: See following page for pressure-temperature ratings.

PROJECT INFORMATION	APPROVAL STAMP
Project:	☐ **Approved**
Address:	☐ **Approved as noted**
Contractor:	☐ **Not approved**
Engineer:	**Remarks:**
Submittal Date:	
Notes 1:	
Notes 2:	

CAST IRON THREADED FITTINGS

Anvil standard and extra heavy cast iron threaded fittings are manufactured in accordance with ASME B16.4. Plugs and bushings are manufactured in accordance with ASME B16.14.

NOTE: Figure 367 Concentric Reducers do not meet the overall length requirement of ASME B16.4. All other dimensions are in compliance.

c UL US

FM APPROVED

For Listings/Approval Details and Limitations, visit our website at www.anvilintl.com or contact an Anvil Sales Representative.

Cast Iron Threaded Fittings Pressure - Temperature Ratings

Temperature		Pressure			
		Class 125		Class 250	
(°F)	*(°C)*	psi	*bar*	psi	*bar*
-20° to 150°	*-28.9 to 65.6*	175	*12.1*	400	*27.6*
200°	*93.3*	165	*11.4*	370	*25.5*
250°	*121.1*	150	*10.3*	340	*23.4*
300°	*148.9*	140	*9.7*	310	*21.4*
350°	*176.7*	125	*8.6*	300	*20.7*
400°	*204.4*	–	–	250	*17.2*

Standards and Specifications

	Dimensions	Material	Galvanizing*	Thread	Pressure Rating
CAST IRON THREADED FITTINGS					
Class 125	ASME B16.4	ASTM A-126 (A)	ASTM A-153	ASME B1.20.1	ASME B16.4
Class 250	ASME B16.4	ASTM A-126 (A)	ASTM A-153	ASME B1.20.1	ASME B16.4
CAST IRON PLUGS AND BUSHINGS					
	ASME B16.14	ASTM A- 126 (A)	ASTM A-153	ASME B1.20.1	ASME B16.14

* ASTM B 633. Type I, SC 4, may be supplied as alternate zinc coating per applicable ASME B16 product standard.

General Assembly of Threaded Fittings

1) Inspect both male and female components prior to assembly.
   - Threads should be free from mechanical damage, dirt, chips and excess cutting oil.
   - Clean or replace components as necessary.
2) Application of thread sealant
   - Use a thread sealant that is fast drying, sets-up to a semi hard condition and is vibration resistant. Alternately, an anaerobic sealant may be utilized.
   - Thoroughly mix the thread sealant prior to application.
   - Apply a thick even coat to the male threads only. Best application is achieved with a brush stiff enough to force sealant down to the root of the threads.
3) Joint Makeup
   - For sizes up to and including 2" pipe, wrench tight makeup is considered three full turns past handtight. Handtight engagement for $^{1}/_{2}$" through 2" thread varies from $4^{1}/_{2}$ turns to 5 turns.
   - For 2 $^{1}/_{2}$" through 4" sizes, wrench tight makeup is considered two full turns past handtight. Handtight engagement for 2 $^{1}/_{2}$" through 4" thread varies from $5^{1}/_{2}$ turns to $6^{3}/_{4}$ turns.

CAST IRON THREADED FITTINGS

Class 125 (Standard)

☐ **FIGURE 356 (Straight)**
☐ **FIGURE 356R (Reducing)**
45° Elbow

FIGURE 356 (Straight)

Figure 356R (Reducing)

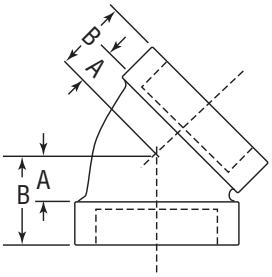

Size		A		B		Unit Weight Black	
NPS	DN	in	mm	in	mm	lbs	kg
1/4	8	7/16	11	3/4	19	0.16	0.07
3/8	10	7/16	11	13/16	22	0.23	0.10
1/2	15	7/16	11	7/8	22	0.37	0.17
3/4	20	1/2	13	1	25	0.55	0.25
1	25	9/16	14	1 1/8	29	0.83	0.38
1 1/4	32	5/8	16	1 1/4	32	1.33	0.60
1 1/2	40	13/16	22	1 7/16	37	1.79	0.81
2	50	1	25	1 11/16	43	2.89	1.31
2 1/2	65	1 1/16	27	1 15/16	49	4.29	1.95
3	80	1 3/16	30	2 3/16	56	6.44	2.92
3 1/2	90	1 3/8	35	2 3/8	60	8.42	3.82
4	100	1 9/16	40	2 5/8	67	10.64	4.83
6	150	2 3/16	56	3 7/16	87	26.02	11.80
8	200	2 7/8	73	4 1/4	108	50.17	22.75

Size		A		B		C		D		Unit Weight Black	
NPS	DN	in	mm	in	mm	in	mm	in	mm	lbs	kg
1 x 1/2	25 x 15	1/2	15	7/8	22	1 1/16	27	1 5/16	33	0.95	0.43

Note: See following page for pressure-temperature ratings.

PROJECT INFORMATION	APPROVAL STAMP
Project:	☐ **Approved**
Address:	☐ **Approved as noted**
Contractor:	☐ **Not approved**
Engineer:	**Remarks:**
Submittal Date:	
Notes 1:	
Notes 2:	

CAST IRON THREADED FITTINGS

Anvil standard and extra heavy cast iron threaded fittings are manufactured in accordance with ASME B16.4. Plugs and bushings are manufactured in accordance with ASME B16.14.

NOTE: Figure 367 Concentric Reducers do not meet the overall length requirement of ASME B16.4. All other dimensions are in compliance.

c UL US

FM APPROVED

For Listings/Approval Details and Limitations, visit our website at www.anvilintl.com or contact an Anvil Sales Representative.

Cast Iron Threaded Fittings Pressure - Temperature Ratings

Temperature		Pressure			
		Class 125		Class 250	
(°F)	*(°C)*	psi	*bar*	psi	*bar*
-20° to 150°	*-28.9 to 65.6*	175	*12.1*	400	*27.6*
200°	*93.3*	165	*11.4*	370	*25.5*
250°	*121.1*	150	*10.3*	340	*23.4*
300°	*148.9*	140	*9.7*	310	*21.4*
350°	*176.7*	125	*8.6*	300	*20.7*
400°	*204.4*	–	–	250	*17.2*

Standards and Specifications

	Dimensions	Material	Galvanizing*	Thread	Pressure Rating
CAST IRON THREADED FITTINGS					
Class 125	ASME B16.4	ASTM A-126 (A)	ASTM A-153	ASME B1.20.1	ASME B16.4
Class 250	ASME B16.4	ASTM A-126 (A)	ASTM A-153	ASME B1.20.1	ASME B16.4
CAST IRON PLUGS AND BUSHINGS					
	ASME B16.14	ASTM A- 126 (A)	ASTM A-153	ASME B1.20.1	ASME B16.14

* ASTM B 633. Type I, SC 4, may be supplied as alternate zinc coating per applicable ASME B16 product standard.

General Assembly of Threaded Fittings

1) Inspect both male and female components prior to assembly.
   - Threads should be free from mechanical damage, dirt, chips and excess cutting oil.
   - Clean or replace components as necessary.
2) Application of thread sealant
   - Use a thread sealant that is fast drying, sets-up to a semi hard condition and is vibration resistant. Alternately, an anaerobic sealant may be utilized.
   - Thoroughly mix the thread sealant prior to application.
   - Apply a thick even coat to the male threads only. Best application is achieved with a brush stiff enough to force sealant down to the root of the threads.
3) Joint Makeup
   - For sizes up to and including 2" pipe, wrench tight makeup is considered three full turns past handtight. Handtight engagement for $^{1}/_{2}$" through 2" thread varies from $4^{1}/_{2}$ turns to 5 turns.
   - For 2 $^{1}/_{2}$" through 4" sizes, wrench tight makeup is considered two full turns past handtight. Handtight engagement for 2 $^{1}/_{2}$" through 4" thread varies from $5^{1}/_{2}$ turns to $6^{3}/_{4}$ turns.

Class 125 (Standard)

FIGURE 358
Tee

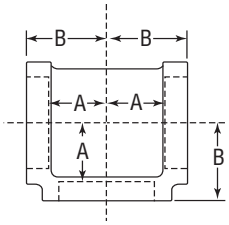

Size		A		B		Unit Weight Black	
NPS	DN	in	mm	in	mm	lbs	kg
1/4	8	1/2	13	13/16	22	0.22	0.10
3/8	10	5/8	16	1	25	0.35	0.16
1/2	15	11/16	17	1 1/8	29	0.56	0.25
3/4	20	13/16	22	1 5/16	33	0.84	0.38
1	25	15/16	24	1 1/2	38	1.25	0.57
1 1/4	32	1 1/8	29	1 3/4	44	2.03	0.92
1 1/2	40	1 5/16	33	1 15/16	49	2.70	1.22
2	50	1 9/16	40	2 1/4	57	4.23	1.92
2 1/2	65	1 13/16	47	2 11/16	68	6.67	3.02
3	80	2 3/16	56	3 1/8	79	10.00	4.54
3 1/2	90	2 7/16	62	3 7/16	87	13.29	6.03
4	100	2 11/16	68	3 3/4	95	16.33	7.41
5	125	3 5/16	84	4 1/2	114	27.33	12.39
6	150	3 7/8	98	5 1/8	130	40.85	18.53
8	200	5 3/16	132	6 9/16	167	79.00	35.83

FIGURE 360
Cross

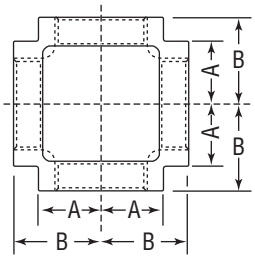

Size		A		B		Unit Weight Black	
NPS	DN	in	mm	in	mm	lbs	kg
1/2	15	9/16	14	13/16	22	2.80	1.27
3/4	20	13/16	22	1 5/16	33	1.03	0.47
1	25	15/16	24	1 1/2	38	1.59	0.72
1 1/4	32	1 1/8	29	1 3/4	44	2.42	1.10
1 1/2	40	1 5/16	33	1 15/16	49	3.21	1.46
2	50	1 9/16	40	2 1/4	57	5.28	2.39
2 1/2	65	1 13/16	47	2 11/16	68	8.07	3.66
3	80	2 3/16	56	3 1/8	79	11.84	5.37
4	100	2 3/4	70	3 13/16	98	19.63	8.90

Note: See following page for pressure-temperature ratings.

PROJECT INFORMATION	APPROVAL STAMP
Project:	☐ **Approved**
Address:	☐ **Approved as noted**
Contractor:	☐ **Not approved**
Engineer:	**Remarks:**
Submittal Date:	
Notes 1:	
Notes 2:	

CAST IRON THREADED FITTINGS

Anvil standard and extra heavy cast iron threaded fittings are manufactured in accordance with ASME B16.4. Plugs and bushings are manufactured in accordance with ASME B16.14.

NOTE: Figure 367 Concentric Reducers do not meet the overall length requirement of ASME B16.4. All other dimensions are in compliance.

c UL US

FM APPROVED

For Listings/Approval Details and Limitations, visit our website at www.anvilintl.com or contact an Anvil Sales Representative.

Cast Iron Threaded Fittings Pressure - Temperature Ratings

Temperature		Pressure			
		Class 125		Class 250	
(°F)	*(°C)*	psi	*bar*	psi	*bar*
-20° to 150°	*-28.9 to 65.6*	175	*12.1*	400	*27.6*
200°	*93.3*	165	*11.4*	370	*25.5*
250°	*121.1*	150	*10.3*	340	*23.4*
300°	*148.9*	140	*9.7*	310	*21.4*
350°	*176.7*	125	*8.6*	300	*20.7*
400°	*204.4*	–	–	250	*17.2*

Standards and Specifications

	Dimensions	Material	Galvanizing*	Thread	Pressure Rating
CAST IRON THREADED FITTINGS					
Class 125	ASME B16.4	ASTM A-126 (A)	ASTM A-153	ASME B1.20.1	ASME B16.4
Class 250	ASME B16.4	ASTM A-126 (A)	ASTM A-153	ASME B1.20.1	ASME B16.4
CAST IRON PLUGS AND BUSHINGS					
	ASME B16.14	ASTM A- 126 (A)	ASTM A-153	ASME B1.20.1	ASME B16.14

* ASTM B 633. Type I, SC 4, may be supplied as alternate zinc coating per applicable ASME B16 product standard.

General Assembly of Threaded Fittings

1) Inspect both male and female components prior to assembly.
   - Threads should be free from mechanical damage, dirt, chips and excess cutting oil.
   - Clean or replace components as necessary.
2) Application of thread sealant
   - Use a thread sealant that is fast drying, sets-up to a semi hard condition and is vibration resistant. Alternately, an anaerobic sealant may be utilized.
   - Thoroughly mix the thread sealant prior to application.
   - Apply a thick even coat to the male threads only. Best application is achieved with a brush stiff enough to force sealant down to the root of the threads.
3) Joint Makeup
   - For sizes up to and including 2" pipe, wrench tight makeup is considered three full turns past handtight. Handtight engagement for $^{1}/_{2}$" through 2" thread varies from $4^{1}/_{2}$ turns to 5 turns.
   - For 2 $^{1}/_{2}$" through 4" sizes, wrench tight makeup is considered two full turns past handtight. Handtight engagement for 2 $^{1}/_{2}$" through 4" thread varies from $5^{1}/_{2}$ turns to $6^{3}/_{4}$ turns.

Fig. AF085 (Formerly Afcon Fig. 085)

Joist Adapter

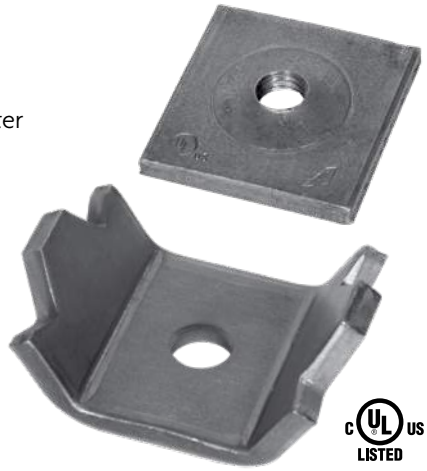

Size Range: Joist Gap: 1/2" through 1 1/4"
Material: Carbon Steel
Finish: ☐ Plain or ☐ Electro-Galvanized per ASTM B633
Service: A seismic structural attachment designed to attach to steel joists. The joist adapter rigidly braces piping systems subjected to horizontal seismic loads.
Approvals: cULus Listed (UL 203a). Complies with the hanging and bracing requirements listed in NFPA 13. Additionally, cULus Listed (UL 203) as a hanger for up to 8" pipe.
Features: Center loads the steel joist.
Installation Instructions:

- Thread 1/2"-13 Rod through the tapped hole in the top plate of the joist adapter.
- Center the top plate and rod over the gap of the steel joist
- Center the bottom bracket between the vertical flanges and allow the rod to pass through the 1/2" thru hole.
- Mount the Fig. AF075, AF076, or AF077 on the underside of the bottom bracket.
- Install the 1/2"-13 standard hex nut on the exposed rod. The hex nut shall be torqued to 40ft*lbs.
- Installation angle determined by the brace angle of the brace pipe and the AF075, AF076, or AF077.
- Fire Protection applications shall also be installed per the requirements of NFPA 13 and local codes.

Ordering: Specify figure number, finish, and description.

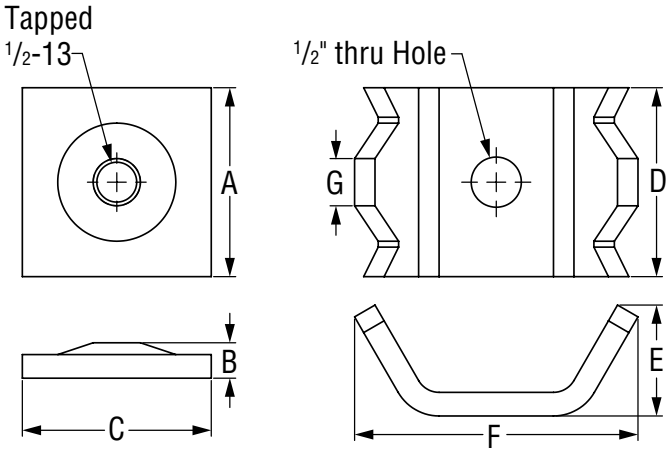

Notes: Anvil International® brand bracing components are designed to be compatible ONLY with other Anvil International® brand bracing components, resulting in a Listed seismic bracing assembly. Updated UL listing information may be viewed at www.ul.com

Disclaimer: Anvil International ("Anvil") does not provide any warranties and specifically disclaims any liability whatsoever with respect to Anvil bracing products and components that are used in combination with products, parts or systems not manufactured or sold by Anvil. In no event shall Anvil be liable for any incidental, direct, consequential, special or indirect damages or lost profits where non-Anvil bracing components have been, or are used.

SeisBrace® Seismic Fire Protection Design Tool may be accessed at www.seisbrace.com

FIG. AF085: DIMENSIONS (IN) • WEIGHT (LBS)							
A	B	C	D	E	F	G	Weight
2	3/8	2	2	1 3/16	3	1/2	0.72

PROJECT INFORMATION	APPROVAL STAMP
Project:	☐ Approved
Address:	☐ Approved as noted
Contractor:	☐ Not approved
Engineer:	Remarks:
Submittal Date:	
Notes 1:	
Notes 2:	

Fig. AF085 (Formerly Afcon Fig. 085)

Joist Adapter (cont.)

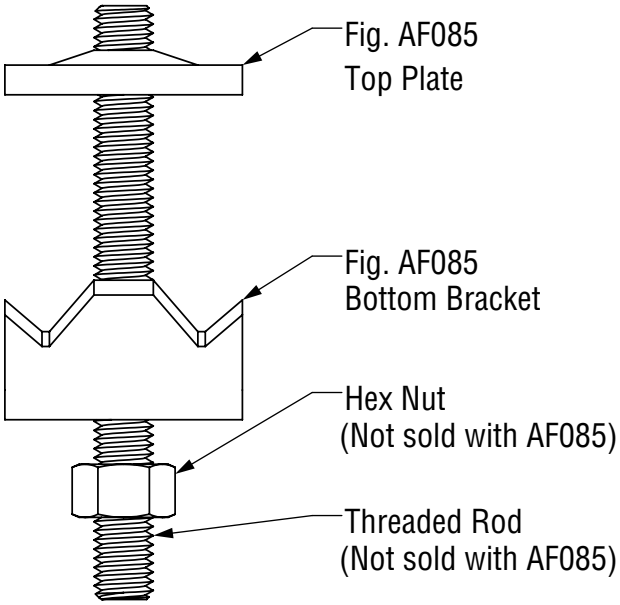

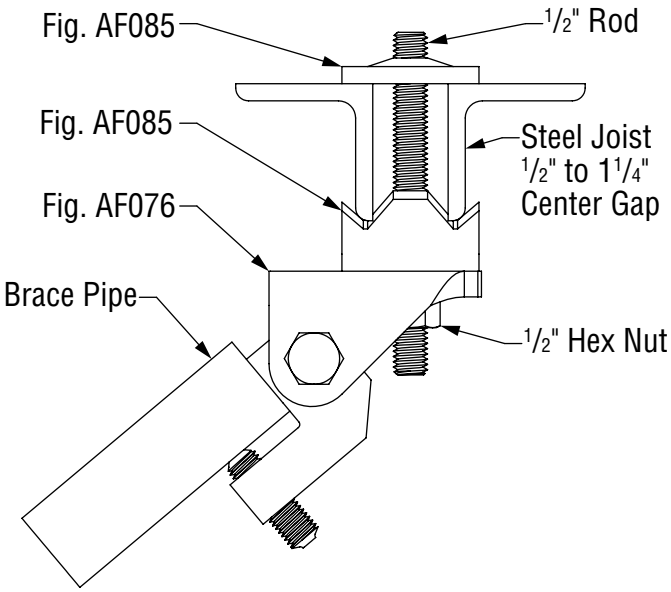

FIG. AF085 cULus MAX SEISMIC HORIZONTAL LOADS: DIMENSIONS (IN) • LOADS (LBS)			
Structure	**Seismic Load Orientation**	**Max Seismic Brace Load**	**Max Service Pipe Size**
Steel Joist	Parallel to Joist	2015	8
	Perpendicular to Joist		

Fig. 69 (Formerly Afcon Fig. 300) Adjustable Swivel Ring, Tapped Per NFPA Standards

Size Range: 1/2" through 8"
Material: Carbon steel
Finish: Strap is Pre-Galvanized Zinc Material. Nut is Zinc Plated.
Service: Recommended for suspension of non-insulated **stationary** pipe line.
Maximum Temperature: 450° F
Approvals: Complies with Federal Specification A-A-1192A (Type 10), *WW-H-171-E (Type 10)*, and ANSI/MSS SP-58 (Type 10). UL Listed and FM Approved (Sizes 3/4" - 8").
Features:

- 1/2" - 2" sizes designed for use with steel and CPVC piping and manufactured with FBC System Compatible oil.
- Threads are countersunk so that they cannot become burred or damaged.
- Knurled swivel nut provides vertical adjustment after piping is in place.
- Captured swivel nut in the 1/2" through 6" sizes. The capture is permanent in the bottom portion of the band, allowing the hanger to be opened during installation if desired, but not allowing the nut to fall completely out.

Ordering: Specify size, figure number and name.
Non-captured nut also available upon request.

1/2" through 2" Size
Rounded Edge Design

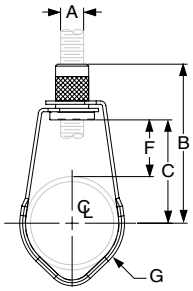

1/2" through 1" pipe

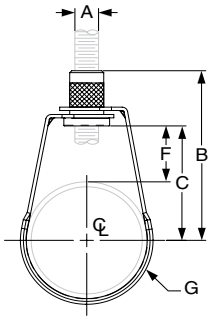

1 1/4" through 2" pipe

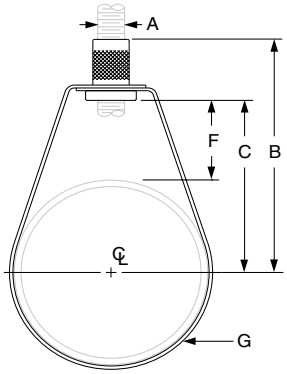

2 1/2" through 8" pipe

2 1/2" through 8" Size

FIG. 69: DIMENSIONS (IN) • LOADS (LBS) • WEIGHT (LBS)

Pipe Size	Max Load	Weight	Rod Size A	B	C	F	G Width
1/2	300	0.10	3/8	2 7/8	2	1 9/16	5/8
3/4		0.10		2 3/4	1 7/8	1 5/16	
1		0.10		2 9/16	1 11/16	1	
1 1/4		0.10		2 5/8	1 3/4	7/8	
1 1/2		0.10		2 3/4	1 7/8		
2		0.11		3 1/4	2 3/8	1 1/8	
2 1/2	525	0.20		4	2 3/4	1 5/16	3/4
3		0.20		3 13/16	2 15/16	1 3/16	
4	650	0.30		4 11/16	3 13/16	1 9/16	
5	1,000	0.54	1/2	5 5/16	4 3/8		
6		0.65		6 11/16	5 9/16	2 1/4	
8		1.00		8 9/16	7 9/16	3 1/4	

PROJECT INFORMATION	APPROVAL STAMP
Project:	☐ Approved
Address:	☐ Approved as noted
Contractor:	☐ Not approved
Engineer:	**Remarks:**
Submittal Date:	
Notes 1:	
Notes 2:	

Fig. 60 (Formerly Afcon Fig. 962)

Steel Washer Plate

Size Range: 3/8" through 3 3/4"
Material: Carbon steel
Finish: Plain or Hot-Dip Galvanized
Service: A heavy duty washer plate used on top of channels or angles for supporting pipe with rods or U-bolts.
Maximum Temperature: Plain 750° F, Galvanized 450° F
Ordering: Specify rod size, figure number, name and finish.

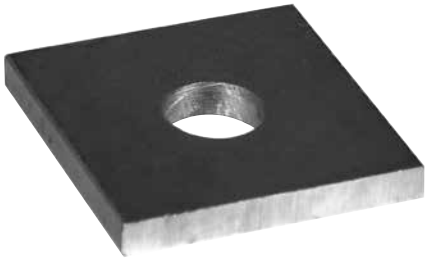

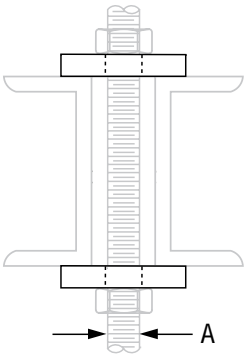

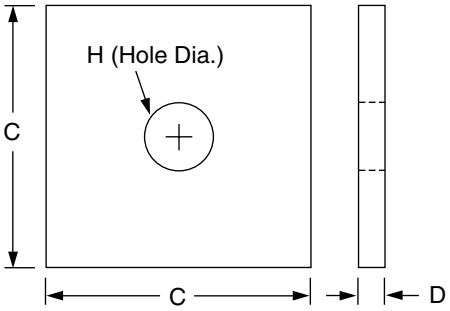

FIG. 60: DIMENSIONS (IN) • WEIGHT (LBS)

Rod Size A	Weight	Max Load 650° F	Max Load 750° F	C x C x D Size of Stock	Hole Dia. H
3/8	0.6	730	572	3 x 3 x 1/4	1/2
1/2	0.6	1,350	1,057		5/8
5/8	0.9	2,160	1,692	3 x 3 x 3/8	3/4
3/4	1.6	3,230	2,530	4 x 4 x 3/8	7/8
7/8	2.2	4,480	3,508	4 x 4 x 1/2	1
1	2.1	5,900	4,620		1 1/4
1 1/4	3.3	9,500	7,440	5 x 5 x 1/2	1 1/2
1 1/2	4.8	13,800	10,807	5 x 5 x 3/4	1 3/4
1 3/4	4.7	18,600	14,566		2
2	4.5	24,600	19,265		2 1/4
2 1/4	6.6	32,300	25,295	6 x 6 x 3/4	2 1/2
2 1/2	6.4	39,800	31,169		2 3/4
2 3/4	6.2	49,400	38,687		3
3	5.9	60,100	47,066		3 1/4
3 1/4	5.6	71,900	56,307		3 1/2
3 1/2	8.1	84,700	66,331	7 x 7 x 3/4	3 3/4
3 3/4	7.8	98,500	77,139		4

Class 125 (Standard)

FIGURE 359
Tee Reducing

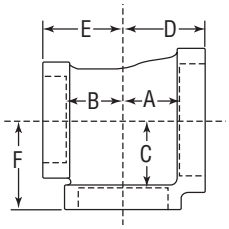

Size						A		B		C		D		E		F		Unit Weight Black	
NPS	DN	NPS	DN	NPS	DN	in	mm	in	mm	in	mm	in	mm	in	mm	in	mm	lbs	kg
1/2	15	1/2	15	1/4	8	1 1/16	17	11/16	17	13/16	22	1 1/8	29	1 1/8	29	1 1/8	29	0.57	0.26
				3/8	10	1 1/16	17	11/16	17	3/4	19	1 1/8	29	1 1/8	29	1 1/8	29	0.57	0.26
				3/4	20	1 3/16	22	13/16	22	11/16	17	1 1/4	32	1 1/4	32	13/16	22	0.68	0.31
				1	25	1	25	1	25	13/16	22	1 7/16	37	1 7/16	37	1 3/8	35	1.00	0.45
3/4	20	1/2	15	1/2	15	1 1/16	17	11/16	17	13/16	22	13/16	22	1 1/8	29	1 1/4	32	0.64	0.29
				3/4	20	1 3/16	22	13/16	22	13/16	22	15/16	24	1 1/4	32	15/16	24	0.75	0.34
		3/4	20	1/4	8	9/16	14	9/16	14	7/8	22	11/16	17	11/16	17	13/16	22	0.62	0.28
				3/8	10	1 1/16	17	11/16	17	15/16	24	13/16	22	13/16	22	1 1/4	32	0.75	0.34
				1/2	15	1 1/16	17	11/16	17	13/16	22	13/16	22	13/16	22	1 1/4	32	0.76	0.34
				1	25	1 5/16	24	15/16	24	13/16	22	1 7/16	37	1 7/16	37	1 3/8	35	0.99	0.45
1	25	1/4	8	1	25	1 5/16	24	15/16	24	15/16	24	1 1/2	38	1 1/4	32	1 1/2	38	1.08	0.49
		1/2	15	1/2	15	1 1/16	17	3/4	19	15/16	24	1 1/4	32	13/16	22	1 3/8	35	0.90	0.41
				3/4	20	1 3/16	22	13/16	22	15/16	24	1 3/8	35	1 1/4	32	1 7/16	37	0.91	0.41
				1	25	1 5/16	24	15/16	24	15/16	24	1 1/2	38	1 3/8	35	1 1/2	38	1.08	0.49
		3/4	20	1/2	15	1 1/16	17	11/16	17	15/16	24	1 1/4	32	13/16	22	1 3/8	35	0.89	0.40
				3/4	20	1 3/16	22	13/16	22	15/16	24	1 3/8	35	15/16	24	1 7/16	37	1.00	0.45
				1	25	1 5/16	24	15/16	24	15/16	24	1 1/2	38	1 7/16	37	1 1/2	38	1.13	0.51
		1	25	1/4	8	1 1/16	17	11/16	17	1 1/8	29	1 1/8	29	1 1/4	32	1 3/8	35	1.01	0.46
				1/2	15	1 1/16	17	11/16	17	15/16	24	1 1/4	32	1 1/4	32	1 3/8	35	1.01	0.46
				3/4	20	1 3/16	22	13/16	22	15/16	24	1 3/8	35	1 3/8	35	1 7/16	37	1.11	0.50
				1 1/4	32	1 1/8	29	1 1/8	29	15/16	24	1 11/16	43	1 11/16	43	1 9/16	40	1.49	0.68
				1 1/2	40	1 1/4	32	1 1/4	32	1	25	1 13/16	47	1 13/16	47	1 5/8	41	1.84	0.83
				2	50	1 7/16	37	1 7/16	37	1	25	2	50	2	50	1 3/4	44	2.70	1.22

Note: See page 6 for pressure-temperature ratings.

PROJECT INFORMATION	APPROVAL STAMP
Project:	☐ **Approved**
Address:	☐ **Approved as noted**
Contractor:	☐ **Not approved**
Engineer:	**Remarks:**
Submittal Date:	
Notes 1:	
Notes 2:	

Class 125 (Standard)

FIGURE 359
Tee Reducing

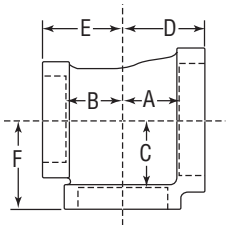

Size						A		B		C		D		E		F		Unit Weight Black	
NPS	DN	NPS	DN	NPS	DN	in	mm	in	mm	in	mm	in	mm	in	mm	in	mm	lbs	kg
1 1/4	32	1/2	15	1/2	15	1 3/16	22	13/16	22	1 1/8	29	1 7/16	37	15/16	24	1 5/8	41	1.00	0.45
				1	25	1 5/16	24	15/16	24	1 1/8	29	1 9/16	40	1 3/8	35	1 11/16	43	1.38	0.63
				1 1/4	32	1 1/8	29	1 1/8	29	1 1/8	29	1 3/4	44	1 9/16	40	1 3/4	44	1.64	0.74
		3/4	20	3/4	20	1 3/16	22	13/16	22	1 1/8	29	1 7/16	37	15/16	24	1 5/8	41	1.27	0.58
				1	25	1 5/16	24	15/16	24	1 1/8	29	1 9/16	40	1 7/16	37	1 11/16	43	1.43	0.65
				1 1/4	32	1 1/8	29	1 1/8	29	1 1/8	29	1 3/4	44	1 5/8	41	1 3/4	44	1.73	0.78
		1	25	1/2	15	1 1/16	17	11/16	17	1 1/8	29	15/16	24	1 1/4	32	1 9/16	40	1.27	0.58
				3/4	20	1 3/16	22	13/16	22	1 1/8	29	1 7/16	37	1 3/8	35	1 5/8	41	1.36	0.62
				1	25	1 5/16	24	15/16	24	1 1/8	29	1 9/16	40	1 9/16	40	1 11/16	43	1.53	0.69
				1 1/4	32	1 1/8	29	1 1/8	29	1 1/8	29	1 3/4	44	1 11/16	43	1 3/4	44	1.79	0.81
				1 1/2	40	1 1/4	32	1 1/4	32	13/16	22	1 7/8	48	1 13/16	47	1 13/16	47	2.07	0.94
				2	50	1 7/16	37	1 7/16	37	13/16	22	2 1/16	52	2	50	1 7/8	48	2.66	1.21
		1 1/4	32	1/2	15	1 1/16	17	11/16	17	1 1/8	29	15/16	24	15/16	24	1 9/16	40	1.47	0.67
				3/4	20	1 3/16	22	13/16	22	1 1/8	29	1 7/16	37	1 7/16	37	1 5/8	41	1.57	0.71
				1	25	1 5/16	24	15/16	24	1 1/8	29	1 9/16	40	1 9/16	40	1 11/16	43	1.73	0.78
				1 1/2	40	1 1/4	32	1 1/4	32	13/16	22	1 7/8	48	1 7/8	48	1 13/16	47	2.29	1.04
				2	50	1 7/16	37	1 7/16	37	13/16	22	2 1/16	52	2 1/16	52	1 7/8	48	2.81	1.27
1 1/2	40	1/2	15	1 1/4	32	13/16	22	1 1/8	29	1 1/4	32	1 13/16	47	1 9/16	40	1 7/8	48	1.93	0.88
				1 1/2	40	15/16	24	1 1/4	32	15/16	24	1 15/16	49	1 11/16	43	1 15/16	49	2.14	0.97
		3/4	20	1 1/2	40	15/16	24	1 1/4	32	15/16	24	1 15/16	49	1 3/4	44	1 15/16	49	2.18	0.99
		1	25	1/2	15	13/16	22	3/4	19	1 1/4	32	1 7/16	37	15/16	24	1 11/16	43	1.75	0.79
				3/4	20	7/8	22	13/16	22	1 1/4	32	1 1/2	38	1 3/8	35	1 3/4	44	1.70	0.77
				1	25	1	25	15/16	24	1 1/4	32	1 5/8	41	1 1/2	38	1 13/16	47	1.72	0.78
				1 1/4	32	13/16	22	1 1/8	29	1 1/4	32	1 13/16	47	1 11/16	43	1 7/8	48	2.08	0.94
				1 1/2	40	15/16	24	1 1/4	32	15/16	24	1 15/16	49	1 13/16	47	1 15/16	49	2.29	1.04
				2	50	1 1/2	38	1 7/16	37	15/16	24	2 1/8	54	2	50	2	51	2.91	1.32
		1 1/4	32	1/2	15	13/16	22	11/16	17	1 1/4	32	1 7/16	37	15/16	24	1 11/16	43	1.67	0.76
				3/4	20	7/8	22	13/16	22	1 1/4	32	1 1/2	38	1 7/16	37	1 3/4	44	1.79	0.81
				1	25	1	25	15/16	24	1 1/4	32	1 5/8	41	1 9/16	40	1 13/16	47	1.97	0.89
				1 1/4	32	13/16	22	1 1/8	29	1 1/4	32	1 13/16	47	1 3/4	44	17/8	48	2.28	1.03
				1 1/2	40	15/16	24	1 1/4	32	15/16	24	1 15/16	49	1 7/8	48	1 15/16	49	2.50	1.13
				2	50	1 1/2	38	1 7/16	37	15/16	24	2 1/8	54	2 1/16	52	2	51	3.07	1.39
		1 1/2	40	1/2	15	13/16	22	13/16	22	1 1/4	32	1 7/16	37	1 7/16	37	1 11/16	43	1.84	0.83
				3/4	20	7/8	22	7/8	22	1 1/4	32	1 1/2	38	1 1/2	38	1 3/4	44	1.95	0.88
				1	25	1	25	1	25	1 1/4	32	1 5/8	41	1 5/8	41	1 13/16	47	2.13	0.97
				1 1/4	32	13/16	22	13/16	22	1 1/4	32	1 13/16	47	1 13/16	47	1 7/8	48	2.44	1.11
				2	50	1 1/2	38	1 1/2	38	15/16	24	2 1/8	54	2 1/8	54	2	51	3.23	1.46
				2 1/2	65	1 13/16	47	1 13/16	47	15/16	24	2 7/16	62	2 7/16	62	2 3/16	56	4.15	1.88

Note: See page 6 for pressure-temperature ratings.

Class 125 (Standard)

FIGURE 359
Tee Reducing

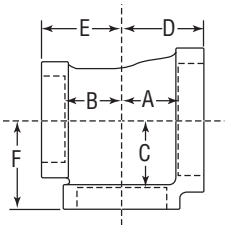

Size						A		B		C		D		E		F		Unit Weight Black	
NPS	DN	NPS	DN	NPS	DN	in	mm	in	mm	in	mm	in	mm	in	mm	in	mm	lbs	kg
2	50	1/2	15	1 1/2	40	15/16	24	1 3/8	35	1 1/2	38	2	51	1 13/16	47	2 1/8	54	2.95	1.34
				2	50	1 9/16	40	1 7/16	37	1 9/16	40	2 1/4	57	1 7/8	48	2 1/4	57	3.30	1.50
		3/4	20	1 1/4	32	1 3/16	22	1 1/8	29	1 7/16	37	1 7/8	48	1 3/4	44	2 1/16	52	2.50	1.13
				1 1/2	40	1 5/16	24	15/16	24	1 1/2	38	2	51	1 13/16	47	2 1/8	54	3.40	1.54
				2	50	1 9/16	40	1 7/16	37	1 9/16	40	2 1/4	57	1 15/16	49	2 1/4	57	3.31	1.50
		1	25	1	25	11/16	17	11/16	17	1 7/16	37	1 3/4	44	1 5/8	41	2	51	2.70	1.22
				1 1/4	32	13/16	22	1 1/8	29	1 1/2	38	1 7/8	48	1 3/4	44	2 1/16	52	2.94	1.33
				1 1/2	40	15/16	24	1 1/4	32	1 1/2	38	2	51	1 13/16	47	2 1/8	54	2.85	1.29
				2	50	1 9/16	40	1 7/16	37	1 9/16	40	2 1/4	57	2	51	2 1/4	57	3.46	1.57
				2 1/2	65	1 7/8	48	1 13/16	47	1 9/16	40	2 9/16	65	2 3/8	60	2 7/16	62	4.88	2.21
		1 1/4	32	1/2	15	11/16	17	1	25	1 7/16	37	1 3/4	44	1 5/8	41	2	51	2.48	1.12
				3/4	20	7/8	22	7/8	22	1 7/16	37	1 9/16	40	1 1/2	38	1 15/16	49	2.50	1.13
				1	25	11/16	17	1	25	1 7/16	37	1 3/4	44	1 5/8	41	2	51	2.73	1.24
				1 1/4	32	13/16	22	1 1/8	29	1 7/16	37	1 7/8	48	1 3/4	44	2 1/16	52	2.90	1.32
				1 1/2	40	15/16	24	1 1/4	32	1 1/2	38	2	51	1 7/8	48	2 1/8	54	3.13	1.42
				2	50	1 9/16	40	1 7/16	37	1 9/16	40	2 1/4	57	2 1/16	52	2 1/4	57	3.71	1.68
				2 1/2	65	1 7/8	48	1 3/4	44	1 9/16	40	2 9/16	65	2 3/8	60	2 7/16	62	4.54	2.06
		1 1/2	40	1/2	15	13/16	22	13/16	22	1 7/16	37	1 1/2	38	1 7/16	37	1 7/8	48	2.34	1.06
				3/4	20	7/8	22	7/8	22	1 7/16	37	1 9/16	40	1 1/2	38	1 15/16	49	2.46	1.12
				1	25	11/16	17	1	25	1 7/16	37	1 3/4	44	1 5/8	41	2	51	2.66	1.21
				1 1/4	32	13/16	22	13/16	22	1 7/16	37	1 7/8	48	1 13/16	47	2 1/16	52	2.98	1.35
				1 1/2	40	15/16	24	15/16	24	1 1/2	38	2	51	1 15/16	49	2 1/8	54	3.24	1.47
				2	50	1 9/16	40	1 1/2	38	1 9/16	40	2 1/4	57	2 1/8	54	2 1/4	57	3.70	1.68
				2 1/2	65	1 7/8	48	1 15/16	49	1 9/16	40	2 9/16	65	2 9/16	65	2 7/16	62	5.46	2.48
		2	50	1/2	15	13/16	22	13/16	22	1 7/16	37	1 1/2	38	1 1/2	38	1 7/8	48	2.74	1.24
				3/4	20	7/8	22	7/8	22	1 7/16	37	1 9/16	40	1 9/16	40	1 15/16	49	2.86	1.30
				1	25	11/16	17	11/16	17	1 7/16	37	1 3/4	44	1 3/4	44	2	51	3.05	1.38
				1 1/4	32	13/16	22	13/16	22	1 7/16	37	1 7/8	48	1 7/8	48	2 1/16	52	3.38	1.53
				1 1/2	40	15/16	24	15/16	24	1 1/2	38	2	51	2	51	2 1/8	54	3.59	1.63
				2 1/2	65	1 7/8	48	1 7/8	48	1 9/16	40	2 9/16	65	2 9/16	65	2 7/16	62	5.17	2.34
				3	100	3	76	3	76	2 7/16	62	3 11/16	94	3 11/16	94	3 1/2	89	7.87	3.57

Note: See page 6 for pressure-temperature ratings.

Class 125 (Standard)

FIGURE 359
Tee Reducing

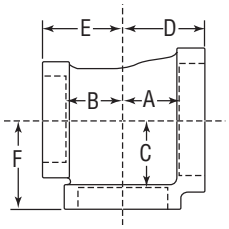

Size						A		B		C		D		E		F		Unit Weight Black	
NPS	DN	NPS	DN	NPS	DN	in	mm	in	mm	in	mm	in	mm	in	mm	in	mm	lbs	kg
2 1/2	65	1/2	15	2 1/2	65	1 13/16	47	1 13/16	47	1 13/16	47	2 11/16	68	2 1/4	57	2 11/16	68	5.20	2.36
		3/4	20	2 1/2	65	1 13/16	47	1 3/4	44	1 13/16	47	2 11/16	68	2 1/4	57	2 11/16	68	5.10	2.31
		1	25	2	50	1 9/16	40	1 9/16	40	1 7/8	48	2 7/16	62	2 1/8	54	2 9/16	65	5.03	2.28
				2 1/2	65	1 13/16	47	1 3/4	44	1 13/16	47	2 11/16	68	2 5/16	59	2 11/16	68	5.36	2.43
		1 1/4	32	2	50	1 9/16	40	1 1/2	38	1 7/8	48	2 7/16	62	2 1/8	54	2 9/16	65	4.96	2.25
				2 1/2	65	1 13/16	47	1 3/4	44	1 13/16	47	2 11/16	68	2 3/8	60	2 11/16	68	5.40	2.45
		1 1/2	40	1 1/2	40	15/16	24	15/16	22	1 13/16	47	2 3/16	56	1 15/16	49	2 7/16	62	4.23	1.92
				2	50	1 9/16	40	1 1/2	38	1 7/8	48	2 7/16	62	2 1/8	54	2 9/16	65	4.85	2.20
				2 1/2	65	1 13/16	47	1 13/16	47	1 13/16	47	2 11/16	68	2 7/16	62	2 11/16	68	4.85	2.20
		2	50	1/2	15	3/4	19	13/16	22	1 3/4	44	1 11/16	43	1 1/2	38	2 3/16	56	5.82	2.64
				3/4	20	7/8	22	7/8	22	1 3/4	44	1 3/4	44	1 9/16	40	2 1/4	57	3.62	1.64
				1	25	1	25	11/16	17	1 3/4	44	1 15/16	49	1 3/4	44	2 5/16	59	3.92	1.78
				1 1/4	32	13/16	22	13/16	22	1 3/4	44	2 1/16	52	1 7/8	48	2 3/8	60	4.26	1.93
				1 1/2	40	15/16	24	15/16	24	1 13/16	47	2 3/16	56	2	51	2 7/16	62	4.42	2.00
				2	50	1 9/16	40	1 9/16	40	1 7/8	48	2 7/16	62	2 1/4	57	2 9/16	65	5.17	2.34
				2 1/2	65	1 13/16	47	1 7/8	48	1 13/16	47	2 11/16	68	2 9/16	65	2 11/16	68	6.00	2.72
				3	80	2 1/16	52	2 1/8	54	1 7/8	48	3	80	2 7/8	73	2 13/16	73	7.35	3.33
		2 1/2	65	1/2	15	3/4	19	3/4	19	1 3/4	44	1 11/16	43	1 11/16	43	2 3/16	56	4.00	1.81
				3/4	20	7/8	22	7/8	22	1 3/4	44	1 3/4	44	1 3/4	44	2 1/4	57	4.29	1.95
				1	25	1	25	1	25	1 3/4	44	1 15/16	49	1 15/16	49	2 5/16	59	4.48	2.03
				1 1/4	32	13/16	22	13/16	22	1 3/4	44	2 1/16	52	2 1/16	52	2 3/8	60	4.83	2.19
				1 1/2	40	15/16	24	15/16	24	1 13/16	47	2 3/16	56	2 3/16	56	2 7/16	62	5.14	2.33
				2	50	1 9/16	40	1 9/16	40	1 7/8	48	2 7/16	62	2 7/16	62	2 9/16	65	5.88	2.67
				3	80	2 1/16	52	2 1/16	52	1 7/8	48	3	80	3	80	2 13/16	73	8.09	3.67
				4	100	2 3/4	70	2 13/16	73	2 7/16	62	3 11/16	94	3 11/16	94	3 1/2	89	14.03	6.36
3	80	3/4	20	3	80	2 1/8	54	2 1/8	54	2 1/8	54	3 1/8	79	2 11/16	68	3 1/8	79	8.25	3.74
		1	25	3	80	2 1/8	54	2 1/8	54	2 1/8	54	3 1/8	79	2 11/16	68	3 1/8	79	8.30	3.76
		1 1/4	32	3	80	2 1/8	54	2 1/8	54	2 1/8	54	3 1/8	79	2 13/16	73	3 1/8	79	8.46	3.84
		1 1/2	40	3	80	2 1/8	54	2 3/16	56	2 1/8	54	3 1/8	79	2 13/16	73	3 1/8	79	8.13	3.69
		2	50	1 1/2	40	1 3/8	35	1 1/2	38	2 3/16	56	2 5/16	59	2 3/16	56	2 13/16	73	6.83	3.10
				2	50	1 9/16	40	1 9/16	40	2 3/16	56	2 9/16	65	2 1/4	57	2 15/16	75	7.29	3.31
				2 1/2	65	1 7/8	48	1 15/16	49	2 1/8	54	2 13/16	73	2 9/16	65	3 1/16	78	7.10	3.22
				3	80	2 1/8	54	2 3/16	56	2 1/8	54	3 1/8	79	2 15/16	75	3 1/8	79	8.79	3.99
		2 1/2	65	1	25	1	25	15/16	24	2 1/8	54	2 1/16	52	1 15/16	49	2 11/16	68	5.51	2.50
				1 1/4	32	1 1/4	32	13/16	22	2 1/8	54	2 3/16	56	2 1/16	52	2 3/4	70	5.92	2.68
				1 1/2	40	1 3/8	35	15/16	24	2 3/16	56	2 5/16	59	2 3/16	56	2 13/16	73	6.23	2.83
				2	50	1 9/16	40	1 1/2	38	2 3/16	56	2 9/16	65	2 7/16	62	2 15/16	75	6.81	3.09
				2 1/2	65	1 7/8	48	1 13/16	47	2 1/8	54	2 13/16	73	2 11/16	68	3 1/16	78	7.66	3.47
				3	80	2 1/8	54	2 1/8	54	2 1/8	54	3 1/8	79	3 1/16	78	3 1/8	79	9.13	4.14
		3	80	1/2	15	15/16	24	15/16	24	2 3/16	56	1 7/8	48	1 7/8	48	2 5/8	67	6.08	2.76
				3/4	20	15/16	24	15/16	24	2 1/8	54	1 7/8	48	1 7/8	48	2 5/8	67	6.06	2.75
				1	25	1	25	1	25	2 1/8	54	2 1/16	52	2 1/16	52	2 11/16	68	6.27	2.84
				1 1/4	32	1 1/4	32	1 1/4	32	2 1/8	54	2 3/16	56	2 3/16	56	2 3/4	70	6.75	3.06
				1 1/2	40	1 3/8	35	1 3/8	35	2 3/16	56	2 5/16	59	2 5/16	59	2 15/16	75	7.10	3.22
				2	50	1 9/16	40	1 9/16	40	2 3/16	56	2 9/16	65	2 9/16	65	2 7/8	73	7.75	3.51
				2 1/2	65	1 7/8	48	1 7/8	48	2 1/8	54	2 13/16	73	2 13/16	73	3 1/16	78	8.92	4.05
				4	100	2 11/16	68	2 11/16	68	2 7/16	62	3 11/16	94	3 11/16	94	3 1/2	89	12.80	5.80

Note: See page 6 for pressure-temperature ratings.

Class 125 (Standard)

FIGURE 359
Tee Reducing

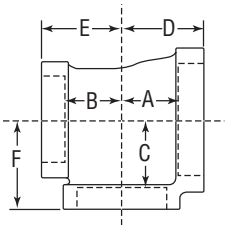

Size						A		B		C		D		E		F		Unit Weight Black	
NPS	DN	NPS	DN	NPS	DN	in	mm	in	mm	in	mm	in	mm	in	mm	in	mm	lbs	kg
3 1/2	90	3 1/2	90	1 1/2	40	1 3/8	35	1 3/8	35	2 7/16	62	2 3/8	60	2 3/8	60	3 1/16	78	8.87	4.02
				2	50	1 5/8	41	1 5/8	41	2 7/16	62	2 5/8	67	2 5/8	67	3 3/16	81	9.94	4.51
4	100	1	25	4	100	2 3/4	70	2 15/16	75	2 3/4	70	3 3/4	95	3 1/2	89	3 3/4	95	13.52	6.13
		1 1/2	40	4	100	2 3/4	70	2 7/8	73	2 3/4	70	3 3/4	95	3 1/2	89	3 3/4	95	13.47	6.11
		2	50	2	50	1 11/16	43	1 7/8	48	2 3/4	70	2 11/16	68	2 9/16	65	3 1/2	89	11.34	5.14
				4	100	2 3/4	70	2 3/4	70	2 3/4	70	3 3/4	95	3 1/2	89	3 3/4	95	13.89	6.30
		2 1/2	65	2 1/2	65	1 7/8	48	1 13/16	47	2 5/8	67	2 15/16	75	2 13/16	73	3 9/16	90	11.78	5.34
				4	100	2 3/4	70	2 3/4	70	2 3/4	70	3 3/4	95	3 5/8	92	3 3/4	95	15.75	7.14
		3	80	2 1/2	65	1 7/8	48	1 7/8	48	2 5/8	67	2 15/16	75	2 13/16	73	3 9/16	90	11.25	5.10
				3	80	2 1/4	57	2 1/8	54	2 11/16	68	3 1/4	83	3 1/8	79	3 5/8	92	12.50	5.67
				4	100	2 3/4	70	2 11/16	68	2 3/4	70	3 3/4	95	3 5/8	92	3 3/4	95	15.04	6.82
		4	100	1	25	13/16	22	13/16	22	2 3/4	70	2 5/16	59	2 5/16	59	3 5/16	84	10.40	4.72
				1 1/4	32	15/16	24	15/16	24	2 5/8	67	2 5/16	59	2 5/16	59	3 5/16	84	10.38	4.71
				1 1/2	40	1 7/16	37	1 7/16	37	2 11/16	68	2 7/16	62	2 7/16	62	3 5/16	84	10.75	4.88
				2	50	1 11/16	43	1 11/16	43	2 3/4	70	2 11/16	68	2 11/16	68	3 1/2	89	11.63	5.27
				2 1/2	65	2	51	2	51	2 5/8	67	2 15/16	75	2 15/16	75	3 9/16	90	12.85	5.83
				3	80	2 1/4	57	2 1/4	57	2 11/16	68	3 1/4	83	3 1/4	83	3 5/8	92	14.12	6.40
				5	125	3 3/8	86	3 3/8	86	2 13/16	73	4 3/8	111	4 3/8	111	4	102	20.88	9.47
				6	150	3 7/8	98	3 7/8	98	2 7/8	73	4 15/16	125	4 15/16	125	4 1/16	103	26.36	11.95
5	125	5	125	2	50	1 3/4	44	1 3/4	44	3 7/16	87	2 15/16	75	2 15/16	75	4 1/8	105	17.43	7.90
				3	80	2 5/16	59	2 5/16	59	3 1/4	83	3 1/2	89	3 1/2	89	4 1/4	108	20.00	9.07
				4	100	2 13/16	71	2 13/16	71	3 3/8	86	4	102	4	102	4 3/8	111	23.83	10.81
6	150	4		4	100	2 7/8	73	2 13/16	71	3 7/8	98	4 1/16	103	4	102	4 15/16	125	30.00	13.61
		6	150	2 1/2	65	2	51	2	51	3 13/16	97	3 1/4	83	3 1/4	83	4 3/4	121	25.67	11.64
				3	80	2 3/8	60	2 3/8	60	3 13/16	97	3 9/16	90	3 9/16	90	4 13/16	122	27.46	12.45
				4	100	2 7/8	73	2 7/8	73	3 7/8	98	4 1/16	103	4 1/16	103	4 15/16	125	32.44	14.71
				5	125	3 3/8	86	3 3/8	86	3 13/16	97	4 5/8	117	4 5/8	117	5	127	37.00	16.78

Note: See page 6 for pressure-temperature ratings.

CAST IRON THREADED FITTINGS

Anvil standard and extra heavy cast iron threaded fittings are manufactured in accordance with ASME B16.4. Plugs and bushings are manufactured in accordance with ASME B16.14.

NOTE: Figure 367 Concentric Reducers do not meet the overall length requirement of ASME B16.4. All other dimensions are in compliance.

c UL US

FM APPROVED

For Listings/Approval Details and Limitations, visit our website at www.anvilintl.com or contact an Anvil Sales Representative.

Cast Iron Threaded Fittings Pressure - Temperature Ratings

Temperature		Pressure			
		Class 125		Class 250	
(°F)	*(°C)*	psi	*bar*	psi	*bar*
-20° to 150°	*-28.9 to 65.6*	175	*12.1*	400	*27.6*
200°	*93.3*	165	*11.4*	370	*25.5*
250°	*121.1*	150	*10.3*	340	*23.4*
300°	*148.9*	140	*9.7*	310	*21.4*
350°	*176.7*	125	*8.6*	300	*20.7*
400°	*204.4*	–	–	250	*17.2*

Standards and Specifications

	Dimensions	Material	Galvanizing*	Thread	Pressure Rating
CAST IRON THREADED FITTINGS					
Class 125	ASME B16.4	ASTM A-126 (A)	ASTM A-153	ASME B1.20.1	ASME B16.4
Class 250	ASME B16.4	ASTM A-126 (A)	ASTM A-153	ASME B1.20.1	ASME B16.4
CAST IRON PLUGS AND BUSHINGS					
	ASME B16.14	ASTM A- 126 (A)	ASTM A-153	ASME B1.20.1	ASME B16.14

* ASTM B 633. Type I, SC 4, may be supplied as alternate zinc coating per applicable ASME B16 product standard.

General Assembly of Threaded Fittings

1) Inspect both male and female components prior to assembly.
   - Threads should be free from mechanical damage, dirt, chips and excess cutting oil.
   - Clean or replace components as necessary.
2) Application of thread sealant
   - Use a thread sealant that is fast drying, sets-up to a semi hard condition and is vibration resistant. Alternately, an anaerobic sealant may be utilized.
   - Thoroughly mix the thread sealant prior to application.
   - Apply a thick even coat to the male threads only. Best application is achieved with a brush stiff enough to force sealant down to the root of the threads.
3) Joint Makeup
   - For sizes up to and including 2" pipe, wrench tight makeup is considered three full turns past handtight. Handtight engagement for $^{1}/_{2}$" through 2" thread varies from $4^{1}/_{2}$ turns to 5 turns.
   - For 2 $^{1}/_{2}$" through 4" sizes, wrench tight makeup is considered two full turns past handtight. Handtight engagement for 2 $^{1}/_{2}$" through 4" thread varies from $5^{1}/_{2}$ turns to $6^{3}/_{4}$ turns.

Victaulic® Reducing Coupling
Style 750

06.08

1.0 PRODUCT DESCRIPTION

Available Sizes

- 2 x 1" through 10 x 8"/DN50 x DN25 through DN250 x DN200

Pipe Material

- Carbon steel
- For exceptions reference section 6.0 Notifications

NOTE

- For other pipe materials, contact Victaulic.

Maximum Working Pressure

- 500 psi/3447 kPa
- Working pressure dependent on material, wall thickness and size of pipe

Application

- Joins Original Groove System (OGS) roll grooved and cut grooved pipe, as well as OGS grooved fittings, valves and accessories
- Permits direct reduction on piping run
- Optional steel washer prevents telescoping of the smaller pipe inside the larger pipe during vertical system assembly

Pipe Preparation

- Cut or roll grooved in accordance with publication 25.01: Victaulic Standard Groove Specifications.

2.0 CERTIFICATION/LISTINGS

EN 10311
CPR (EU)
No. 305/2011

BS EN 10311
CPR (UK)
2019 No. 465

NOTE

- Download publication 10.01 for Fire Protection Certifications/Listings Reference Guide.

ALWAYS REFER TO ANY NOTIFICATIONS AT THE END OF THIS DOCUMENT REGARDING PRODUCT INSTALLATION, MAINTENANCE OR SUPPORT.

 © 2022 Victaulic Company. All rights reserved.

3.0 SPECIFICATIONS – MATERIAL

Housing: Ductile iron conforming to ASTM A536, Grade 65-45-12. Ductile iron conforming to ASTM A395, Grade 65-45-15, is available upon special request.

Housing Coating: (specify choice)

- ☐ Standard: Orange enamel.
- ☐ Optional: Hot dipped galvanized conforming to ASTM A153.
- ☐ Optional: Contact Victaulic with your requirements.

Gasket: (specify choice[1])

☐ **Grade "E" EPDM**

EPDM (Green stripe color code). Temperature range –30°F to +230°F/–34°C to +110°C. May be specified for hot water service within the specified temperature range plus a variety of dilute acids, oil-free air and many chemical services. UL Classified in accordance with ANSI/NSF 61 for cold +73°F/+23°C and hot +180°F/+82°C potable water service and ANSI/NSF 372. **NOT COMPATIBLE FOR USE WITH PETROLEUM SERVICES OR STEAM SERVICES.**

☐ **Grade "T" Nitrile**

Nitrile (Orange stripe color code). Temperature range –20°F to +180°F/–29°C to +82°C. May be specified for oil related services, including air with oil vapor, this gasket may be specified for temperatures rated up to +180°F/+82°C. For water related services, this gasket may be specified for temperatures rated up to +150°F/+66°C. For oil free, dry air services, this gasket may be specified for temperatures rated up to +140°F/+60°C. **NOT COMPATIBLE FOR USE WITH HOT WATER SERVICES OR STEAM SERVICES.**

Others

☐ For alternate gasket selection, reference publication 05.01: Victaulic Seal Selection Guide.

1 Services listed are General Service Guidelines only. It should be noted that there are services for which these gaskets are not compatible. Reference should always be made to the latest Victaulic Seal Selection Guide for specific gasket service guidelines and for a listing of services which are not compatible.

Bolts/Nuts (specify choice[2]):

☐ Standard: Carbon steel oval neck track bolts meeting the mechanical property requirements of ASTM A449 (imperial) and ISO 898-1 Class 9.8 (M10-M16) Class 8.8 (M20 and greater). Carbon steel hex nuts meeting the mechanical property requirements of ASTM A563 Grade B (imperial – heavy hex nuts) and ASTM A563M Class 9 (metric – hex nuts). Track bolts and hex nuts are zinc electroplated per ASTM B633 ZN/FE5, finish Type III (imperial) or Type II (metric).

☐ Optional: Stainless steel oval neck track bolts meeting the mechanical property requirements of ASTM F593, Group 2 (316 stainless steel), condition CW. Stainless steel heavy nuts meeting the mechanical property requirements of ASTM F594, Group 2 (316 stainless steel), condition CW, with galling reducing coating.

Assembly Washer (optional): Galvanized carbon steel.

2 Optional bolts/nuts are available in imperial size only

 © 2022 Victaulic Company. All rights reserved.

4.0 DIMENSIONS

Style 750 Reducing Coupling

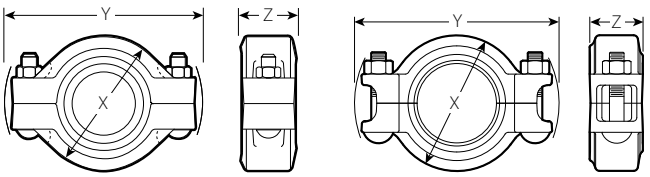

Size						Pipe End Separation[3]	Deflect. From CL[3]		Bolt/Nut		Dimensions			Weight
Nominal inches DN			Actual Outside Diameter inches mm			Allowable inches mm	Per Cplg. Degrees	Pipe in/ft mm/m	Qty.	Size inches mm	X inches mm	Y inches mm	Z inches mm	Approximate (Each) lb kg
2 DN50	x	1 DN25	2.375 60.3	x	1.315 33.7	0 - 0.07 0 - 1.8	0° - 57'	0.20 17	2	⅜ x 2	3.38 85	5.28 134	1.88 48	2.7 1.2
		1 ½ DN40			1.900 48.3	0 - 0.07 0 - 1.8	0° - 57'	0.20 17	2	⅜ x 2	3.38 85	5.28 134	1.88 48	2.0 1.0
2 ½	x	2 DN50	2.875 73.0	x	2.375 60.3	0 - 0.07 0 - 1.8	0° - 47'	0.16 14	2	⅜ x 2	4.00 102	5.93 151	1.88 48	3.1 1.4
DN65	x	2 DN50	3.000 76.1	x	2.375 60.3	0 - 0.07 0 - 1.8	0° - 47'	0.16 14	2	½ x 2 ¾	4.38 111	6.63 168	1.88 48	4.6 2.1
3 DN80	x	2 DN50	3.500 88.9	x	2.375 60.3	0 - 0.07 0 - 1.8	0° - 39'	0.13 11	2	½ x 2 ¾	4.75 121	7.13 181	1.88 48	4.9 2.2
		2 ½			2.875 73.0	0 - 0.07 0 - 1.8	0° - 39'	0.13 11	2	½ x 2 ¾	4.75 121	7.13 181	1.88 48	4.3 2.0
		DN65			3.00 76.1	0 - 0.07 0 - 1.8	0° - 39'	0.13 11	2	½ x 2 ¾	4.75 121	7.13 181	1.88 48	4.2 1.9
4 DN100	x	2 DN50	4.500 114.3	x	2.375 60.3	0 - 0.13 0 - 3.2	1° - 19'	0.28 25	2	⅝ x 3 ¼	6.25 159	8.90 226	2.25 57	8.1 3.7
		2 ½			2.875 73.0	0 - 0.13 0 - 3.2	1° - 19'	0.28 25	2	⅝ x 3 ¼	6.25 159	8.90 226	2.25 57	8.6 3.9
		DN65			3.000 76.1	0 - 0.13 0 - 3.2	1° - 19'	0.28 25	2	⅝ x 3 ¼	6.25 159	8.90 226	2.25 57	6.9 3.1
		3 DN80			3.500 88.9	0 - 0.13 0 - 3.2	1° - 19'	0.28 25	2	⅝ x 3 ¼	6.00 152	8.90 226	2.25 57	6.7 3.0
5	x	4 DN100	5.563 141.3	x	4.500 114.3	0 - 0.13 0 - 3.2	1° - 3'	0.22 19	2	¾ x 4 ¼	7.18 182	10.70 272	2.13 54	11.2 5.1
165.1	x	4 DN100	6.500 165.1	x	4.500 114.3	0 - 0.13 0 - 3.2	0° - 55'	0.19 16	2	¾ x 4 ¼	8.63 219	11.90 302	2.25 57	15.2 6.9
6 DN150	x	4 DN100	6.625 168.3	x	4.500 114.3	0 - 0.13 0 - 3.2	0° - 52'	0.18 15	2	¾ x 4 ¼	8.63 219	11.90 302	2.25 57	16.7 7.6
		5			5.563 141.3	0 - 0.13 0 - 3.2	0° - 52'	0.18 15	2	¾ x 4 ¼	8.31 211	11.90 302	2.25 57	12.9 5.9
8 DN200	x	165.1	8.625 219.1	x	6.500 165.1	0 - 0.13 0 - 3.2	0° - 38'	0.13 11	2	⅞ x 5	10.75 273	14.88 378	2.50 64	23.2 10.5
		6 DN150			6.625 168.3	0 - 0.13 0 - 3.2	0° - 38'	0.13 11	2	⅞ x 5	10.81 275	14.88 378	2.50 64	22.4 10.2
10 DN250	x	8 DN200	10.750 273.0	x	8.625 219.1	0 - 0.13 0 - 3.2	0° - 25'	0.90 8	2	1 x 5 ½	13.12 333	17.26 438	2.62 67	31.4 14.2

[3] Allowable Pipe End Separation and Deflection figures show the maximum nominal range of movement available at each joint for standard roll grooved pipe. Figures for standard cut grooved pipe may be doubled. These figures are maximums; for design and installation purposes, these figures should be reduced by: 50% for ¾ – 3 ½"/DN20 – DN90; and 25% for 4"/DN100 and larger.

NOTE

- Metric thread size bolts are available (color-coded gold) for all coupling sizes upon request. Contact Victaulic for details.

 © 2022 Victaulic Company. All rights reserved.

5.0 PERFORMANCE

Style 750 Reducing Coupling

Size						Maximum Working Pressure[4]	Maximum End Load[4]
Nominal			Actual Outside Diameter				
inches DN			inches mm			psi kPa	lb N
2 DN50	x	1 DN25	2.375 60.3	x	1.315 33.7	350 2413	500 2225
		1 ½ DN40			1.900 48.3	350 2413	1000 4450
2 ½	x	2 DN50	2.875 73.0	x	2.375 60.3	500 3447	2215 9850
DN65	x	2 DN50	3.000 76.1	x	2.375 60.3	350 2413	1550 6900
3 DN80	x	2 DN50	3.500 88.9	x	2.375 60.3	350 2413	1550 6900
		2 ½			2.875 73.0	500 3447	3250 14460
		DN65			3.00 76.1	350 2413	2475 11010
4 DN100	x	2 DN50	4.500 114.3	x	2.375 60.3	350 2413	1550 6900
		2 ½			2.875 73.0	350 2413	2275 10125
		DN65			3.000 76.1	350 2413	2475 11014
		3 DN80			3.500 88.9	500 3447	4810 21400
5	x	4 DN100	5.563 141.3	x	4.500 114.3	350 2413	5565 24765
165.1	x	4 114.3	6.500 165.1	x	4.500 114.3	350 2413	5565 24765
6 DN150	x	4 DN100	6.625 168.3	x	4.500 114.3	350 2413	5565 24765
		5			5.563 141.3	350 2413	8500 37825
8 DN200	x	165.1	8.625 219.1	x	6.500 165.1	350 2413	11610 51645
		6 DN150			6.625 168.3	350 2413	12060 53645
10 DN250	x	8 DN200	10.750 273.0	x	8.625 219.1	350 2413	20450 90970

[4] Working Presssure and End Load are total from all internal and external loads based on standard weight (ANSI) steel pipe standard roll or cut grooved in accordance with Victaulic specifications. Contact Victaulic for performance on other pipe and material. Maximum working pressure rating based on larger pipe size. Maximum end load rating based on smaller pipe size.

NOTES

- WARNING: FOR ONE-TIME FIELD USE ONLY the Maximum Joint Working Pressure may be increased to 1 ½ times the figures shown.
- For joint pressure ratings on additional carbon steel wall thicknesses see publication 06.15.

 © 2022 Victaulic Company. All rights reserved.

5.1 PERFORMANCE

Flow Data - Head Loss

Equivalent lengths of standard weight steel pipe are shown in the tables. All data is based on water flowing at +60°F/+16°C.

Flow Reducing

Size			Equivalent Pipe Length
Nominal inches DN			Small Diameter ft m
2 DN50	x	1 DN25	5.9 1.8
		1 ½ DN40	2.0 0.6
2 ½	x	2 DN50	1.9 0.6
DN65	x	2 DN50	1.9 0.6
3 DN80	x	2 DN50	5.5 1.7
		2 ½	3.8 1.2
		DN65	3.8 1.2
4 DN100	x	2 DN50	6.0 1.8
		2 ½	6.0 1.8
		DN65	6.0 1.8
		3 DN80	6.0 1.8
5	x	4 DN100	3.0 0.9
165.1	x	4 DN100	6.0 1.8
6 DN150	x	4 DN100	6.0 1.8
		5	4.5 1.4
8 DN200	x	165.1	7.3 2.2
		6 DN150	7.3 2.2
10 DN250	x	8 DN200	8.7 2.7

Flow Expanding

Size			Equivalent Pipe Length
Nominal inches DN			Small Diameter ft m
1 DN25	x	2 DN50	2.7 0.8
1 ½ DN40	x	2 DN50	1.9 0.6
2 DN50	x	2 ½	1.0 0.3
		DN65	1.0 0.3
		3 DN80	3.5 1.1
		4 DN100	3.0 0.9
2 ½	x	3 DN80	2.5 0.8
		4 DN100	3.0 0.9
DN65	x	3 DN80	2.5 0.8
		4 DN100	3.0 0.9
3 DN80	x	4 DN100	2.5 0.8
4 DN100	x	5	3.3 1.0
		165.1	4.6 1.4
		6 DN150	4.6 1.4
5	x	6 DN150	2.3 0.7
165.1	x	8 DN200	5.4 1.7
6 DN150	x	8 DN200	6.0 1.8
8 DN200	x	10 DN250	6.3 1.9

 © 2022 Victaulic Company. All rights reserved.

6.0 NOTIFICATIONS

⚠ WARNING

- **Victaulic RX roll sets must be used when grooving light-wall/thin-wall stainless steel pipe for use with Victaulic Couplings.**

Failure to use Victaulic RX roll sets when grooving light-wall/thin-wall stainless steel pipe may cause joint failure, resulting in serious personal injury and/or property damage.

⚠ WARNING

- **Read and understand all instructions before attempting to install, remove, adjust, or maintain any Victaulic piping products.**
- **Depressurize and drain the piping system before attempting to install, remove, adjust, or maintain any Victaulic piping products.**
- **Wear safety glasses, hardhat, and foot protection.**
- **Only No. 61 bull plugs shall be used with Style 750 reducing couplings in systems where a vacuum may develop.**

Failure to follow these instructions could result in death or serious personal injury and property damage.

NOTICE

- **Victaulic does not recommend the use of any furnace butt-welded pipe with sizes NPS 2"/DN50 and smaller Victaulic gasketed joint products. This includes, but is not limited to, ASTM A53 Type F pipe.**

7.0 REFERENCE MATERIALS

05.01: Victaulic Seal Selection Guide
06.15: Victaulic Pressure Ratings and End Loads for Victaulic Couplings on Steel Pipe
10.01: Victaulic Products for Fire Protection Piping Systems - Regulatory Approval Reference Guide
25.01: Victaulic Original Groove System (OGS) Groove Specifications
26.01: Victaulic Design Data
29.01: Victaulic Terms and Conditions of Sale
I-100: Victaulic Field Installation Handbook

User Responsibility for Product Selection and Suitability
Each user bears final responsibility for making a determination as to the suitability of Victaulic products for a particular end-use application, in accordance with industry standards and project specifications, and the applicable building codes and related regulations as well as Victaulic performance, maintenance, safety, and warning instructions. Nothing in this or any other document, nor any verbal recommendation, advice, or opinion from any Victaulic employee, shall be deemed to alter, vary, supersede, or waive any provision of Victaulic Company's standard conditions of sale, installation guide, or this disclaimer.

Intellectual Property Rights
No statement contained herein concerning a possible or suggested use of any material, product, service, or design is intended, or should be constructed, to grant any license under any patent or other intellectual property right of Victaulic or any of its subsidiaries or affiliates covering such use or design, or as a recommendation for the use of such material, product, service, or design in the infringement of any patent or other intellectual property right. The terms "Patented" or "Patent Pending" refer to design or utility patents or patent applications for articles and/or methods of use in the United States and/or other countries.

Note
This product shall be manufactured by Victaulic or to Victaulic specifications. All products to be installed in accordance with current Victaulic installation/assembly instructions. Victaulic reserves the right to change product specifications, designs and standard equipment without notice and without incurring obligations.

Installation
Reference should always be made to the Victaulic installation handbook or installation instructions of the product you are installing. Handbooks are included with each shipment of Victaulic products, providing complete installation and assembly data, and are available in PDF format on our website at www.victaulic.com.

Warranty
Refer to the Warranty section of the current Price List or contact Victaulic for details.

Trademarks
Victaulic and all other Victaulic marks are the trademarks or registered trademarks of Victaulic Company, and/or its affiliated entities, in the U.S. and/or other countries.

 © 2022 Victaulic Company. All rights reserved.

FireLock™ Installation-Ready™ Rigid Couplings
Style 009N and Style 109

10.64

Patented

Patented

1.0 PRODUCT DESCRIPTION

Available Sizes

- Style 009N: 1 ¼ – 12"/DN32 – DN300
- Style 109: 1 ¼ – 4"/DN32 – DN100

Pipe Material

- Schedule 10, Schedule 40 or specialty carbon steel pipe listed in Section 5. For use with alternative materials and wall thicknesses please contact Victaulic
- For exceptions reference section 6.0 Notifications

Maximum Working Pressure

- Accommodates pressures ranging from full vacuum (29.9 in Hg/760 mm Hg) to 365 psi/2517 kPa

Function

- Joins carbon steel pipe with grooved ends conforming to publication 25.01
- Provides a rigid pipe joint designed to restrict axial or angular movement

2.0 CERTIFICATION/LISTINGS

LPS 1219: Issue 3.1
Cert/LPCB Ref. 104-1a/36

009N: G4090023
109: G421013

EN 10311
CPR (EU)
No. 305/2011

BS EN 10311
CPR (UK)
2019 No. 465

ALWAYS REFER TO ANY NOTIFICATIONS AT THE END OF THIS DOCUMENT REGARDING PRODUCT INSTALLATION, MAINTENANCE OR SUPPORT.

 © 2024 Victaulic Company. All rights reserved.

3.0 SPECIFICATIONS – MATERIAL

Housing: Ductile iron conforming to ASTM A 536, Grade 65-45-12. Ductile iron conforming to ASTM A 395, Grade 65-45-15, is available upon special request.

Housing Coating: (specify choice)

- ☐ Orange coating
- ☐ Red coating (standard for EMEA-I and Asia Pacific)
- ☐ Optional for Style 009N: Hot Dipped Galvanized per ASTM A123
- ☐ Optional for Style 109: Mechanically Galvanized per ASTM B695 (available only in North America and Latin America).

Gasket: (specify choice)

- ☐ **Grade "E" EPDM (Type A) Vic-Plus™ Pre-lubricated Gasket**

  EPDM (Violet Color Code). Applicable for wet and dry (oil-free air) fire protection systems only. Listed/Approved for continuous use in wet and dry systems. Listed/Approved for dry systems at -40°F/-40°C and above. Not compatible for use with hot water services or steam services.

NOTES

- Reference should always be made to publication I-100, Victaulic Field Installation Handbook for gasket lubrication instructions.
- Services listed are General Service Guidelines only. It should be noted that there are services for which these gaskets are not compatible. Reference should always be made to publication 05.01, Victaulic Gasket Selection Guide for specific gasket service guidelines and for a listing of services which are not compatible.

Bolts/Nuts: (specify choice)

- ☐ Standard: Carbon steel oval neck track bolt(s) meeting the mechanical property requirements of ASTM A449 (imperial) and ISO 898-1 Class 9.8 (M10-M16) Class 8.8 (M20 and greater). Carbon steel hex nuts meeting the mechanical property requirements of ASTM A563 Grade B (imperial) and ASTM A563M Class 9 (metric). Track bolts and hex nuts are zinc electroplated per ASTM B633 Fe/Zn 5, finish Type III (imperial) or Type II (metric).
- ☐ Optional for Style 009N: Stainless steel oval neck track bolts meeting the requirements of ASTM F593, Group 2 (316 stainless steel), condition CW. Stainless steel Heavy Hex nuts meeting the requirements of ASTM F594, Group 2 (316 stainless steel), condition CW, with galling-resistant coating.[1]

[1] Optional bolts/nuts are available in imperial size only.

Coupling Linkage: High Strength Steel with comparable physical properties to that of the Track Bolt (ASTM A449). Linkage is zinc electroplated per ASTM B633 Fe/Zn 5, Type III Finish.

 © 2024 Victaulic Company. All rights reserved.

4.0 DIMENSIONS

Style 009N Two-Bolt *Installation-Ready* Coupling

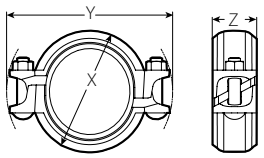

Style 009N Pre-Assembled

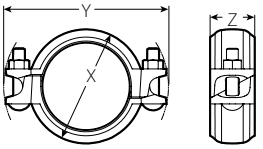

Style 009N Joint Assembled

Size					Bolt/Nut		Dimensions					
							Pre-assembled		Joint Assembled			
Nominal inches DN	Actual Outside Diameter inches mm	Maximum Working Pressure[2] psi kPa	Maximum End Load[2] lb N	Allow. Pipe End Separation[3] inches mm	Qty.	Size inches mm	X inches mm	Y inches mm	X inches mm	Y inches mm	Z inches mm	Approx. Weight (Each) lb kg
1 ¼ DN32	1.660 42.4	365 2517	790 3514	0.10 2.54	2	⅜ × 2 M10 x 51	3.13 79	5.00 127	2.75 70	5.00 127	2.00 51	1.4 0.6
1 ½ DN40	1.900 48.3	365 2517	1035 4604	0.10 2.54	2	⅜ × 2 M10 x 51	3.38 86	5.13 130	3.00 76	5.13 130	2.00 51	1.5 0.7
2 DN50	2.375 60.3	365 2517	1617 7193	0.12 3.05	2	⅜ × 2 ½ M10 x 63	4.00 102	5.63 143	3.50 89	5.63 143	2.00 51	1.9 0.9
2 ½	2.875 73.0	365 2517	2370 10542	0.12 3.05	2	⅜ × 2 ½ M10 x 63	4.50 114	6.13 156	4.00 102	6.13 156	2.00 51	2.1 1.0
DN65	3.000 76.1	365 2517	2580 11476	0.12 3.05	2	⅜ × 2 ½ M10 x 63	4.63 118	6.00 152	4.13 105	6.13 156	2.00 51	2.1 1.0
3 DN80	3.500 88.9	365 2517	3512 15622	0.12 3.05	2	⅜ × 2 ½ M10 x 63	5.13 130	6.75 171	4.63 117	6.75 171	2.00 51	2.3 1.0
4 DN100	4.500 114.3	365 2517	5805 25822	0.17 4.32	2	⅜ × 2 ½ M10 x 63	6.00 152	7.88 200	5.63 143	7.50 191	2.13 54	2.9 1.3
	4.250 108.0	365 2517	5178 23020	0.17 4.32	2	⅜ × 2 ½ M10 x 63	5.63 152	7.38 1.87	5.38 137	7.38 187	2.13 54	3.1 1.4
5	5.563 141.3	365 2517	8872 39456	0.17 4.32	2	½ × 3 M12 x 76	7.25 184	9.25 235	6.75 171	9.13 232	2.25 57	5.0 2.3
	5.250 133.0	365 2517	7901 35106	0.17 4.32	2	½ × 3 M12 x 76	6.63 168	9.00 229	6.38 162	9.00 229	2.25 57	4.8 2.2
DN125	5.500 139.7	365 2517	8672 38529	0.17 4.32	2	½ × 3 M12 x 76	6.88 175	9.25 235	6.75 171	9.13 232	2.25 57	4.9 2.2
6 DN150	6.625 168.3	365 2517	12582 44469	0.17 4.32	2	½ × 3 ¼ M12 x 83	8.38 213	10.38 264	7.88 200	10.13 257	2.25 57	6.0 2.7
	6.250 159.0	365 2517	11198 49753	0.17 4.32	2	½ × 3 ¼ M12 x 83	7.88 200	10.00 254	7.38 187	9.88 251	2.25 57	5.6 2.5
	6.500 165.1	365 2517	12112 53813	0.17 4.32	2	½ × 3 ¼ M12 x 83	8.00 203	10.25 260	7.75 197	10.13 257	2.25 57	6.0 2.7
8 DN200	8.625 219.1	365 2517	21326 94863	0.17 4.32	2	⅝ × 4 M16 x 101	10.88 276	13.38 340	10.25 260	13.13 333	2.50 64	11.4 5.2
	8.500 216.0	365 2517	20712 55968	0.17 4.32	2	⅝ × 4 M16 x 101	10.63 270	13.25 337	10.25 260	10.13 257	2.63 67	11.4 5.2
10 DN250	10.750 273.0	300 2068	27229 121121	0.25 6.4	2	⅞ × 6 ½ M22 x 165	13.75 349	17.00 432	13.25 337	17.13 435	2.75 70	22.6 10.3
12 DN300	12.750 323.9	300 2068	38303 170380	0.25 6.4	2	⅞ × 6 ½ M22 x 165	16.00 406	19.00 483	15.50 394	19.13 486	2.75 70	27.6 12.5

[2] Working Pressure and End Load are total, from all internal and external loads, based on standard weight (ANSI) steel pipe, standard roll or cut grooved in accordance with Victaulic specifications. See the Listings/Approvals section of this publication for ratings on other pipe.

[3] The allowable pipe separation dimension shown is for system layout purposes only. Style 009N couplings are considered rigid connections and will not accommodate expansion or contraction of the piping system.

NOTES

- When assembling Style 009N or Style 109 couplings onto end caps, take additional care to make certain the end cap is fully seated against the gasket end stop. For Style 009N or Style 109 couplings, use FireLock No. 006 end caps containing the "EZ" marking on the inside face or No. 60 end caps containing the "QV EZ" marking on the inside face. Non-Victaulic end cap products shall not be used with Style 009N or Style 109 couplings. IMPORTANT: Gaskets intended for the Style 009 or Style 009V couplings cannot be used with the Style 009N or Style 109 coupling. There is no interchanging of gaskets or housings between coupling styles.
- **Use Of FlushSeal Gaskets For Dry Pipe Systems** Style 009N or Style 109 couplings are supplied with Grade "E" Type A gaskets. These gaskets include an integral pipe stop, that once installed provides the similar benefits as a FlushSeal gasket for dry pipe systems. It should be noted that standard Victaulic FlushSeal gaskets cannot be used with the Style 009N or Style 109 couplings.
- The Allowable Pipe End Separation dimension shown is for system layout purposes only. Style 009N or Style 109 Installation-Ready rigid couplings are considered rigid connections and will not accommodate expansion/contraction or angular movement of the piping system. Contact Victaulic for torsional resistance information.

 © 2024 Victaulic Company. All rights reserved.

4.1 DIMENSIONS

Style 109 One-Bolt *Installation-Ready* Coupling

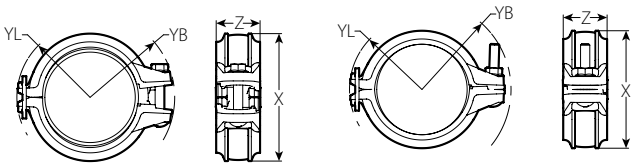

Style 109 Pre-Assembled Style 109 Joint Assembled

Size		Max. Working Pressure	Max. End Load	Allow. Pipe End Sep. Maximum	Bolt/Nut		Dimensions								Approx. Weight (Each)
							Pre-Assembled				Assembled				
Nominal inches DN	Actual Outside Diameter inches mm	psi kPa	Lbs. N	inches mm	Qty.	Size inches mm	YL inches mm	YB inches mm	X inches mm	Z inches m m	YL inches mm	YB inches mm	X inches mm	Z inches mm	lb kg
1 ¼ DN32	1.660 42.4	365 2517	790 3514	0.10 2.54	1	⅜ x 2 ¼ M10 x 57	1.97 50	2.49 63	3.17 81	1.95 50	1.93 49	2.59 66	2.84 72	1.95 50	1.5 0.7
1 ½ DN40	1.900 48.3	365 2517	1035 4603	0.10 2.54	1	⅜ x 2 ¼ M10 x 57	2.13 54	2.60 66	3.41 87	1.95 50	2.1 53	2.68 68	3.07 78	1.95 50	1.6 0.7
2 DN50	2.375 60.3	365 2517	1617 7192	0.12 3.048	1	⅜ x 2 ¼ M10 x 57	2.32 59	2.85 72	3.76 96	1.98 50	2.29 58	2.95 75	3.45 88	1.98 50	1.9 0.9
2 ½	2.875 73.0	365 2517	2370 10540	0.12 3.048	1	⅜ x 2 ¼ M10 x 57	2.63 67	3.09 78	4.29 109	1.99 51	2.61 66	3.15 80	3.93 100	1.99 51	2.1 1.0
DN65	3.000 76.1	365 2517	2580 11476	0.12 3.048	1	7⁄16 x 2 ¾ M11 x 69	2.68 68	3.22 82	4.56 116	2.03 52	2.64 67	3.45 88	4.22 107	2.03 52	2.4 1.1
3 DN80	3.500 88.9	365 2517	3512 15620	0.12 3.048	1	7⁄16 x 2 ¾ M11 x 69	2.93 74	3.53 90	5.13 130	2.07 53	2.89 73	3.78 96	4.67 119	2.07 53	2.7 1.2
4 DN100	4.500 114.3	300 2068	4771 21223	0.17 4.318	1	7⁄16 x 2 ¾ M11 x 69	3.47 88	4.01 102	6.03 153	2.08 53	3.43 87	4.22 107	5.56 141	2.08 53	3.5 1.6

[4] Working Pressure and End Load are total, from all internal and external loads, based on standard weight (ANSI) steel pipe, standard roll or cut grooved in accordance with Victaulic specifications. See the Listings/Approvals section of this publication for ratings on other pipe.

[5] The allowable pipe separation dimension shown is for system layout purposes only. Style 109 couplings are considered rigid connections and will not accommodate expansion or contraction of the piping system.

NOTES

- When assembling Style 009N or Style 109 couplings onto end caps, take additional care to make certain the end cap is fully seated against the gasket end stop. For Style 009N or Style 109 couplings, use FireLock No. 006 end caps containing the "EZ" marking on the inside face or No. 60 end caps containing the "QV EZ" marking on the inside face. Non-Victaulic end cap products shall not be used with Style 009N or Style 109 couplings. IMPORTANT: Gaskets intended for the Style 009 or Style 009V couplings cannot be used with the Style 009N or Style 109 coupling. There is no interchanging of gaskets or housings between coupling styles.
- **Use Of FlushSeal Gaskets For Dry Pipe Systems** Style 009N or Style 109 couplings are supplied with Grade "E" Type A gaskets. These gaskets include an integral pipe stop, that once installed provides the similar benefits as a FlushSeal gasket for dry pipe systems. It should be noted that standard Victaulic FlushSeal gaskets cannot be used with the Style 009N or Style 109 couplings.
- The Allowable Pipe End Separation dimension shown is for system layout purposes only. Style 009N or Style 109 Installation-Ready rigid couplings are considered rigid connections and will not accommodate expansion/contraction or angular movement of the piping system. Contact Victaulic for torsional resistance information.

 © 2024 Victaulic Company. All rights reserved.

5.0 PERFORMANCE

Style 009N Two-Bolt *Installation-Ready* Coupling Listings/Approvals[6]

The information provided below is based on the latest listing and approval data at the time of publication. Listings/Approvals are subject to change and/or additions by the approval agencies. Contact Victaulic for performance on other pipe and the latest listings and approvals.

Size		cULus		FM		VdS	LPCB
Nominal inches DN	Actual Outside Diameter inches mm	Sch. 10 psi kPa bar	Sch. 40 psi kPa bar	Sch. 10 psi kPa bar	Sch. 40 psi kPa bar	psi kPa bar	psi kPa bar
1 ¼ DN32	1.660 42.4	365 2517 25	365 2517 25	363 2503 25	363 2503 25	363 2500 25	363 2500 25
1 ½ DN40	1.900 48.3	365 2517 25	365 2517 25	363 2503 25	363 2503 25	363 2500 25	363 2500 25
2 DN50	2.375 60.3	365 2517 25	365 2517 25	363 2503 25	363 2503 25	363 2500 25	363 2500 25
2 ½	2.875 73.0	365 2517 25	365 2517 25	363 2503 25	363 2503 25	– – –	363 2503 25
DN65	3.000 76.1	365[7] 2517[7] 25[7]	– – –	363[8] 2503[8] 25[8]	– – –	363 2500 25	363 2500 25
3 DN80	3.500 88.9	365 2517 25	365 2517 25	363 2503 25	363 2503 25	363 2500 25	363 2500 25
	4.250 108.0	– – –	– – –	363 2503 25	363 2503 25	– – –	– – –
4 DN100	4.500 114.3	365 2517 25	365 2517 25	363 2503 25	363 2503 25	363 2500 25	363 2500 25
	5.250 133.0	– – –	– – –	363[8] 2503[8] 25[8]	– – –	– – –	– – –
DN125	5.500 139.7	290[9] 2000[9] 20[9]	– – –	363[8] 2503[8] 25[8]	– – –	232 1600 16	363 2500 25
5	5.563 141.3	290 2000 20	365 2517 25	363 2503 25	363 2503 25	232 1600 16	363 2500 25
	6.250 159	– – –	– – –	363[8] 2503[8] 25[8]	– – –	– – –	– – –
	6.500 165.1	290[10] 2000[10] 20[10]	– – –	363[8] 2503[8] 25[8]	– – –	– – –	363 2500 25

6 Listed/Approved for continuous use in wet and dry systems. Listed/Approved for dry systems -40° F/C and above. Please see the Victaulic Installation Manual I-009N for details concerning when supplemental lubrication is required.

7 cULus listed for DIN 2458 (EN 10220) 2.6 mm pipe wall.

8 FM approved for BS 1387 (EN 10255) Medium 3.6 mm pipe wall.

9 cULus listed for EN 10220 4.0 mm pipe wall.

10 cULus listed for EN 10255 4.5 mm pipe wall.

11 With optional stainless steel fasteners, cULus Listed to 300 psi/2068 kPa/20.6 bar and FM Approved to the FM ratings shown in the above table. The stainless steel fasteners have a marking designation of "316" on the head of the bolt.

12 FM approved for 0.188" pipe wall.

13 cULus listed for 0.188" pipe wall.

 © 2024 Victaulic Company. All rights reserved.

5.0 PERFORMANCE (CONTINUED)

Style 009N Two-Bolt *Installation-Ready* Coupling Listings/Approvals[6]

The information provided below is based on the latest listing and approval data at the time of publication. Listings/Approvals are subject to change and/or additions by the approval agencies. Contact Victaulic for performance on other pipe and the latest listings and approvals.

Size		cULus		FM		VdS	LPCB
Nominal inches DN	Actual Outside Diameter inches mm	Sch. 10 psi kPa bar	Sch. 40 psi kPa bar	Sch. 10 psi kPa bar	Sch. 40 psi kPa bar	psi kPa bar	psi kPa bar
6 DN150	6.625 168.3	300 2068 20	365 2517 25	300 2068 20	363 2503 25	232 1600 16	363 2500 25
	8.515 216.3	290 2000 20	– – –	363[8] 2503[8] 25[8]	– – –	– – –	– – –
8 DN200	8.625 219.1	300 2068 20	365 2517 25	300[12] 2068[12] 20[12]	363 2503 25	232 1600 16	363 2500 25
10 DN250	10.750 273.0	300[13] 2068[13] 20[13]	300 2068 20	300[12] 2068[12] 20[12]	300 2068 20	– – –	290 2000 20
12 DN300	12.750 323.9	300[13] 2068[13] 20[13]	300 2068 20	250[12] 1720[12] 17[12]	300 2068 20	– – –	290 2000 20

6 Listed/Approved for continuous use in wet and dry systems. Listed/Approved for dry systems -40° F/C and above. Please see the Victaulic Installation Manual I-009N for details concerning when supplemental lubrication is required.

7 cULus listed for DIN 2458 (EN 10220) 2.6 mm pipe wall.

8 FM approved for BS 1387 (EN 10255) Medium 3.6 mm pipe wall.

9 cULus listed for EN 10220 4.0 mm pipe wall.

10 cULus listed for EN 10255 4.5 mm pipe wall.

11 With optional stainless steel fasteners, cULus Listed to 300 psi/2068 kPa/20.6 bar and FM Approved to the FM ratings shown in the above table. The stainless steel fasteners have a marking designation of "316" on the head of the bolt.

12 FM approved for 0.188" pipe wall.

13 cULus listed for 0.188" pipe wall.

 © 2024 Victaulic Company. All rights reserved.

5.1 PERFORMANCE

Style 109 One-Bolt *Installation-Ready* Coupling Listings/Approvals[15]

The information provided below is based on the latest listing and approval data at the time of publication. Listings/ Approvals are subject to change and/or additions by the approvals agencies. Contact Victaulic for performance on other pipe and the latest listings and approvals.

Size		cULus		FM		VdS	LPCB
Nominal inches DN	**Actual Outside Diameter** inches mm	**Sch. 10** psi kPa bar	**Sch. 40** psi kPa bar	**Sch. 10** psi kPa bar	**Sch. 40** psi kPa bar	psi kPa bar	psi kPa bar
1 ¼ DN32	1.660 42.4	365 2517 25	365 2517 25	365 2517 25	365 2517 25	232 1600 16	363 2503 25
1 ½ DN40	1.900 48.3	365 2517 25	365 2517 25	365 2517 25	365 2517 25	232 1600 16	363 2503 25
2 DN50	2.375 60.3	365 2517 25	365 2517 25	365 2517 25	365 2517 25	232 1600 16	363 2503 25
2 ½	2.875 73.0	365 2517 25	365 2517 25	365 2517 25	365 2517 25	– – –	– – –
DN65	3.000 76.1	365 2517 25	365 2517 25	365 2517 25	365 2517 25	232 1600 16	363 2503 25
3 DN80	3.500 88.9	365 2517 25	365 2517 25	365 2517 25	365 2517 25	232 1600 16	363 2503 25
4 DN100	4.500 114.3	300 2068 20	300 2068 20	300 2068 20	300 2068 20	– – –	290 2000 20

[15] Listed/Approved for continuous use in wet and dry systems. Listed/Approved for dry systems -40° F/C and above. Please see the Victaulic Installation Manual I-109 for details concerning when supplemental lubrication is required.

NOTE

- With optional stainless steel fasteners, cULus Listed to 300 psi/2068 kPa/20.6 bar and FM Approved to the FM ratings shown in the above table. The stainless steel fasteners have a marking designation of "316" on the head of the bolt.

 © 2024 Victaulic Company. All rights reserved.

5.2 PERFORMANCE

Specialty Pipe
Style 009N Two-Bolt *Installation-Ready* Coupling Listings/Approvals

Pipe Type	Size inches DN	Pressure Rating cULus psi kPa bar	Pressure Rating FM psi kPa bar
EF	1 ¼ – 4 DN32 – DN100	300 2068 20	N/A
EL	1 ¼ – 2 DN32 – DN50	300 2068 20	300 2068 20
ET40	1 ¼ – 2 DN32 – DN50	300 2068 20	N/A
EZF	3 – 4 DN80 – DN100	300 2068 20	N/A
EZT	1 ¼ – 2 DN32 – DN50	300 2068 20	300 2068 20
FF	1 ½ – 4 DN40 – DN100	300 2068 20	N/A
GL	1 ¼ – 2 DN32 – DN50	300 2068 20	300 2068 20
MF	1 ¼ – 4 DN32 – DN100	300 2068 20	300 2068 20
	6 DN150	175 1205 12	175 1205 12
MT	1 ¼ – 2 DN32 – DN50	300 2068 20	300 2068 20
MLT	1 ¼ – 2 DN32 – DN50	N/A	300 2068 20
TF	2 ½ – 4 73.0 mm – DN100	N/A	300 2068 20
WG5, WG5E, WF5, WG7, WG7E, WL7	1 ¼ – 4 DN32 – DN100	300 2068 20	300 2068 20
WLS	1 ¼ – 2 DN32 – DN50	300 2068 20	300 2068 20

NOTES

- EF = EDDY FLOW steel pipe manufactured by Bull Moose Tube Co.
- EL = EDDYLITE steel pipe manufactured by Bull Moose Tube Co.
- ET40 = Eddythread 40 steel pipe manufactured by Bull Moose Tube Co.
- EZF = EZ-Flow steel pipe manufactured by Northwest Pipe Co.
- EZT = EZ-Thread steel pipe manufactured by Youngstown Tube Co.
- FF = Fire-Flo steel pipe manufactured by Youngstown Tube Co.
- GL = GL steel pipe manufactured by Wheatland Tube Co.
- MF = Mega-Flow steel pipe manufactured by Wheatland Tube Co.
- MT = Mega-Thread steel pipe manufactured by Wheatland Tube Co.
- MLT = MLT steel pipe manufactured by Wheatland Tube Co
- TF = Tex-Flow steel pipe manufactured by Tex-Tube Co.
- WG5, WG5E, WF5 = WGalweld 5, WGalweld 5E, WFlow 5 steel pipe manufactured by Wuppermann Stahl GmbH.
- WG7, WG7E, WL7 = WGalweld 7, Wgalweld 7E, WLight 7 steel pipe manufactured by Wuppermann Stahl GmbH
- WLS = WLS steel pipe manufactured by Wheatland Tube Co.

 © 2024 Victaulic Company. All rights reserved.

5.3 PERFORMANCE

Specialty Pipe
Style 109 One-Bolt *Installation-Ready* Coupling Listings/Approvals

Pipe Type	Size inches DN	Pressure Rating cULus psi kPa bar	 FM psi kPa bar
EF	1 ¼ – 2 ½ DN32 – 73.0 mm	N/A	300 2068 20
	1 ½ – 2 ½ DN40 – 73.0 mm	300 2068 20	N/A
	3 – 4 DN80 – DN100	300 2068 20	300 2068 20
Easy-Flow	1 ¼ – 2 DN32 – DN50	N/A	300 2068 20
	3 – 4 DN80 – DN100	N/A	300 2068 20
EL	1 ¼ – 2 DN32 – DN50	N/A	300 2068 20
ET40	1 ¼ – 2 DN32 – DN50	300 2068 20	300 2068 20
EZT	1 ¼ – 2 DN32 – DN50	N/A	300 2068 20
	1 ½ – 2 DN40 – DN50	300 2068 20	N/A
FF	1 ½ – 4 DN40 – DN100	300 2068 20	300 2068 20
GL	1 ¼ – 2 DN32 – DN50	N/A	300 2068
MF	1 ¼ – 4 DN32 – DN100	300 2068 20	300 2068 20
MT	1 ¼ – 2 DN32 – DN50	300 2068 20	300 2068 20
MLT	1 ¼ – 2 DN32 – DN50	300 2068 20	300 2068 20

NOTES

- EF = EDDY FLOW steel pipe manufactured by Bull Moose Tube Co.
- Easy-Flow = Easy-Flow steel pipe manufactured by Borusan Mannesmann Boru.
- EL = EDDYLITE steel pipe manufactured by Bull Moose Tube Co.
- ET40 = Eddythread 40 steel pipe manufactured by Bull Moose Tube Co.
- EZT = EZ-Thread steel pipe manufactured by Youngstown Tube Co.
- FF = Fire-Flo steel pipe manufactured by Youngstown Tube Co.
- GL = GL steel pipe manufactured by Wheatland Tube Co.
- MF = Mega-Flow steel pipe manufactured by Wheatland Tube Co.
- MT = Mega-Thread steel pipe manufactured by Wheatland Tube Co.
- MLT = MLT steel pipe manufactured by Wheatland Tube Co.
- TF = Tex-Flow steel pipe manufactured by Tex-Tube Co.
- WG5, WG5E, WF5 = WGalweld 5, WGalweld 5E, and WFlow 5 steel pipe manufactured by Wuppermann Stahl GmbH
- WG7, WG7E, WL7 = WGalweld 7, WGalweld 7E, and WLight 7 steel pipe manufactured by Wuppermann Stahl GmbH.
- WLS = WLS steel pipe manufactured by Wheatland Tube Co.

 © 2024 Victaulic Company. All rights reserved.

5.3 PERFORMANCE (CONTINUED)

Specialty Pipe
Style 109 One-Bolt *Installation-Ready* Coupling Listings/Approvals

Pipe Type	Size inches DN	Pressure Rating cULus psi kPa bar	Pressure Rating FM psi kPa bar
TF	2 ½ – 4 73.00 mm – DN100	N/A	300 2068 20
WG5, WG5E, WF5, WL7	1 ¼ – 4 DN32 – DN100	300 2068 20	N/A
WG7, WG7E	1 ¼ – 4 DN32 – DN100	300 2068 20	300 2068 20
WLS	1 ¼ – 2 DN32 – DN50	N/A	300 2068 20

NOTES

- EF = EDDY FLOW steel pipe manufactured by Bull Moose Tube Co.
- Easy-Flow = Easy-Flow steel pipe manufactured by Borusan Mannesmann Boru.
- EL = EDDYLITE steel pipe manufactured by Bull Moose Tube Co.
- ET40 = Eddythread 40 steel pipe manufactured by Bull Moose Tube Co.
- EZT = EZ-Thread steel pipe manufactured by Youngstown Tube Co.
- FF = Fire-Flo steel pipe manufactured by Youngstown Tube Co.
- GL = GL steel pipe manufactured by Wheatland Tube Co.
- MF = Mega-Flow steel pipe manufactured by Wheatland Tube Co.
- MT = Mega-Thread steel pipe manufactured by Wheatland Tube Co.
- MLT = MLT steel pipe manufactured by Wheatland Tube Co.
- TF = Tex-Flow steel pipe manufactured by Tex-Tube Co.
- WG5, WG5E, WF5 = WGalweld 5, WGalweld 5E, and WFlow 5 steel pipe manufactured by Wuppermann Stahl GmbH
- WG7, WG7E, WL7 = WGalweld 7, WGalweld 7E, and WLight 7 steel pipe manufactured by Wuppermann Stahl GmbH.
- WLS = WLS steel pipe manufactured by Wheatland Tube Co.

 © 2024 Victaulic Company. All rights reserved.

6.0 NOTIFICATIONS

WARNING

- **Read and understand all instructions before attempting to install any Victaulic products.**
- **Always verify that the piping system has been completely depressurized and drained immediately prior to installation, removal, adjustment, or maintenance of any Victaulic products.**
- **Wear safety glasses, hardhat, and foot protection.**

Failure to follow these instructions could result in death or serious personal injury and property damage.

- **These products shall be used only in fire protection systems that are designed and installed in accordance with current, applicable National Fire Protection Association (NFPA 13, 13D, 13R, etc.) standards, or equivalent standards, and in accordance with applicable building and fire codes. These standards and codes contain important information regarding protection of systems from freezing temperatures, corrosion, mechanical damage, etc.**
- **The installer shall understand the use of this product and why it was specified for the particular application.**
- **The installer shall understand common industry safety standards and potential consequences of improper product installation.**
- **It is the system designer's responsibility to verify suitability of materials for use with the intended fluid media within the piping system and external environment.**
- **The material specifier shall evaluate the effect of chemical composition, pH level, operating temperature, chloride level, oxygen level, and flow rate on materials to confirm system life will be acceptable for the intended service.**

Failure to follow installation requirements and local and national codes and standards could compromise system integrity or cause system failure, resulting in death or serious personal injury and property damage.

NOTICE

- **Victaulic does not recommend the use of any furnace butt-welded pipe with sizes 2"/DN50 and smaller Victaulic gasketed joint products. This includes, but is not limited to, ASTM A53 Type F pipe.**

7.0 REFERENCE MATERIALS

05.01: Seal Selection Guide
25.01: Original Groove System (OGS) Groove Specifications
I-009N: Installation Instructions FireLock EZ™ Rigid Coupling Style 009N
I-100: Victaulic Field Installation Handbook
I-109: Installation Instructions FireLock™ One-Bolt Rigid Coupling Style 109
I-ENDCAP: Victaulic End Caps Installation Instructions
I-IMPACT: Impact Tool Usage Guidelines

User Responsibility for Product Selection and Suitability
Each user bears final responsibility for making a determination as to the suitability of Victaulic products for a particular end-use application, in accordance with industry standards and project specifications, and the applicable building codes and related regulations as well as Victaulic performance, maintenance, safety, and warning instructions. Nothing in this or any other document, nor any verbal recommendation, advice, or opinion from any Victaulic employee, shall be deemed to alter, vary, supersede, or waive any provision of Victaulic Company's standard conditions of sale, installation guide, or this disclaimer.

Intellectual Property Rights
No statement contained herein concerning a possible or suggested use of any material, product, service, or design is intended, or should be constructed, to grant any license under any patent or other intellectual property right of Victaulic or any of its subsidiaries or affiliates covering such use or design, or as a recommendation for the use of such material, product, service, or design in the infringement of any patent or other intellectual property right. The terms "Patented" or "Patent Pending" refer to design or utility patents or patent applications for articles and/or methods of use in the United States and/or other countries.

Note
This product shall be manufactured by Victaulic or to Victaulic specifications. All products to be installed in accordance with current Victaulic installation/assembly instructions. Victaulic reserves the right to change product specifications, designs and standard equipment without notice and without incurring obligations.

Installation
Reference should always be made to the Victaulic installation handbook or installation instructions of the product you are installing. Handbooks are included with each shipment of Victaulic products, providing complete installation and assembly data, and are available in PDF format on our website at www.victaulic.com.

Warranty
Refer to the Warranty section of the current Price List or contact Victaulic for details.

Trademarks
Victaulic and all other Victaulic marks are the trademarks or registered trademarks of Victaulic Company, and/or its affiliated entities, in the U.S. and/or other countries.

 © 2024 Victaulic Company. All rights reserved.

Victaulic® FireLock™ Rigid Coupling
Style 005H

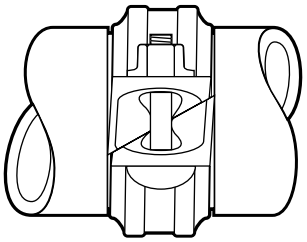

Exaggerated for clarity

1.0 PRODUCT DESCRIPTION

Available Sizes

- 1 ¼ – 8"/DN32 – DN200

Maximum Working Pressure

- Up to 350 psi/2413 kPa

Function

- Joins carbon steel pipe with grooved ends conforming to publication 25.01
- This product is designed for fire protection systems only

Pipe Material

- Schedule 10, Schedule 40 or specialty carbon steel pipe listed in Section 5. For use with alternative materials and wall thicknesses please contact Victaulic
- For exceptions reference section 6.0 Notifications

2.0 CERTIFICATION/LISTINGS

104-1a/02

ALWAYS REFER TO ANY NOTIFICATIONS AT THE END OF THIS DOCUMENT REGARDING PRODUCT INSTALLATION, MAINTENANCE OR SUPPORT.

 © 2024 Victaulic Company. All rights reserved.

3.0 SPECIFICATIONS – MATERIAL

Housing: Ductile iron conforming to ASTM A-536, grade 65-45-12. Ductile iron conforming to ASTM A-395, grade 65-45-15, is available upon special request.

Housing Coating: (specify choice)

- ☐ Orange coating.
- ☐ Red coating (standard for EMEA-I and Asia Pacific).
- ☐ Optional: Hot dipped galvanized.

Coupling Gasket (specify choice):

- ☐ Grade "E" EPDM Type A Vic-Plus™ Gasket System[1]

  EPDM (Violet color code). FireLock products have been Listed by Underwriters Laboratories Inc. and Approved by Factory Mutual Research for wet and dry (oil free air) sprinkler services up to the rated working pressure using the Grade "E" Type A Vic-Plus™ Gasket System, requiring no field lubrication for most installation conditions.

- ☐ Grade "L" silicone

  Recommended for dry heat, air without hydrocarbons to +350°F and certain chemical service.

  For dry services, Victaulic continues to recommend the use of Grade "E" Type A FlushSeal® Gasket. Contact Victaulic for details.

[1] Standard gasket and FlushSeal gasket approved for dry pipe systems to –40°F/–40°C. Based on "typical" pipe surface conditions, supplemental lubricant is recommended for services installed below 0°F/–18°C and for all dry pipe systems or systems to be subjected to air tests prior to being filled with water. Supplemental lubrication may also be required on pipe with raised or undercut weld seams or pipe that has voids and/or cracks at the weld seams. Victaulic continues to recommend the use of FlushSeal gaskets for dry services.

NOTE

- Additional gasket styles are available. Contact Victaulic for details.

Bolts/Nuts: Carbon steel oval neck track bolt(s) meeting the mechanical property requirements of ASTM A449 (imperial) and ISO 898-1 Class 9.8 (M10-M16) Class 8.8 (M20 and greater). Carbon steel hex nuts meeting the mechanical property requirements of ASTM A563 Grade B (imperial) and ASTM A563M Class 9 (metric). Track bolts and hex nuts are zinc electroplated per ASTM B633 Fe/Zn 5, finish Type III (imperial) or Type II (metric).

 © 2024 Victaulic Company. All rights reserved.

4.0 DIMENSIONS

Style 005H

Rated for wet and dry sprinkler systems at 350 psi/2413 kPa for 1 ¼ – 4"/32 – 100 mm sizes and 300 psi /2068 kPa for 4 ¼ – 8"/108 – 200 mm sizes; Schedule 10 roll grooved or Schedule 40 cut or roll grooved steel pipe. Style 005H is rigid and does not accommodate expansion, contraction or angular deflection.

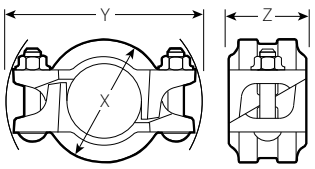

Style 005H

Size						Dimensions			
Nominal inches mm	**Actual Outside Diameter** inches mm	**Maximum Working Pressure**[1 4] psi kPa	**Maximum End Load**[1] lbs N	**Allow. Pipe End Separation**[2] inches mm	**Bolt/Nut**[3] No –size inches	**X** inches mm	**Y** inches mm	**Z** inches mm	**Approx. Weight Each** lbs kg
1 ¼ 32	1.660 42.4	350 2413	755 3370	0.05 1.2	2 – ⅜ × 2 ¼	2.75 70	4.50 114	1.88 48	1.2 0.5
1 ½ 40	1.900 48.3	350 2413	990 4415	0.05 1.2	2 – ⅜ × 2 ¼	3.00 76	4.75 121	1.88 48	1.2 0.5
2 50	2.375 60.3	350 2413	1550 6900	0.07 1.7	2 – ⅜ × 2 ½	3.50 89	5.25 133	1.88 48	1.6 0.7
2 ½ 65	2.875 73.0	350 2413	2270 10110	0.07 1.7	2 – ⅜ × 2 ½	4.00 102	5.75 146	1.88 48	1.9 .09
76.1 mm	3.000 76.1	350 2413	2475 11010	0.07 1.7	2 – ⅜ × 2 ½	4.13 105	5.75 146	1.88 48	1.9 0.9
3 80	3.500 88.9	350 2413	3365 14985	0.07 1.7	2 – ⅜ × 2 ½	4.63 118	6.13 156	1.88 48	2.1 1.0
4 100	4.500 114.3	350 2413	5565 24770	0.16 4.1	2 – ⅜ × 2 ½	5.75 146	7.25 184	2.13 54	3.1 1.4
108.0 mm	4.250 108.0	300 2068	4255 18940	0.16 4.1	2 – ⅜ × 2 ½	5.63 143	7.25 184	2.13 54	3.1 1.4
5 125	5.563 141.3	300 2068	7290 32445	0.16 4.1	2 – ½ × 3	6.88 175	9.00 229	2.13 54	4.5 2.0
133.0 mm	5.250 133.0	300 2068	6495 28900	0.16 4.1	2 – ½ × 2 ¾	6.63 168	9.00 229	2.13 54	4.5 2.0
139.7 mm	5.500 139.7	300 2068	7125 31715	0.16 4.1	2 – ½ × 2 ¾	6.88 175	9.00 229	2.13 54	4.8 2.2
6 150	6.625 168.3	300 2068	10340 46020	0.16 4.1	2 – ½ × 3	8.00 203	10.00 254	2.13 53	5.0 2.3
159.0 mm	6.250 159.0	300 2068	9200 40955	0.16 4.1	2 – ½ × 2 ¾	7.63 194	10.00 254	2.13 54	5.5 2.5
165.1 mm	6.500 165.1	300 2068	9955 44295	0.16 4.1	2 – ½ × 3	8.15 207	10.00 254	2.13 54	5.5 2.5
8 200	8.625 219.1	300 2068	17525 78000	0.19 4.8	2 – ⅝ × 4 ¼	10.50 267	13.14 334	2.63 67	11.3 5.1

1 Working Pressure and End Load are total, from all internal and external loads, based on standard weight (ANSI) steel pipe, standard roll or cut grooved in accordance with Victaulic specifications. Contact Victaulic for performance on other pipe. WARNING: FOR ONE TIME FIELD TEST ONLY, the Maximum Joint Working Pressure may be increased to 1½ times the figures shown.

2 The allowable pipe separation dimension shown is for system layout purposes only. Style 005H couplings are considered rigid connections and will not accommodate expansion or contraction of the piping system.

3 Number of bolts required equals number of housing segments. Metric thread size bolts are available (color coded gold) for all coupling sizes upon request. Contact Victaulic for details.

4 Style 005H couplings are VdS and LPC Approved to 16 Bar/235 psi.

 © 2024 Victaulic Company. All rights reserved.

5.0 PERFORMANCE

Style 005H

The information provided below is based on the latest listing and approval data at the time of publication. Listings/ Approvals are subject to change and/or additions by the approvals agencies.

Contact Victaulic for performance on other pipe and the latest listings and approvals.

Related Working Pressure psi					Related Working Pressure psi					Related Working Pressure psi				
Pipe Sch.	Size inches	UL	ULC	FM	Pipe Sch.	Size inches	UL	ULC	FM	Pipe Sch.	Size inches	UL	ULC	FM
5	1¼ – 3	175	175	175	EL	1¼ – 2	300	N/A	N/A	MT	1¼ – 2	300	N/A	N/A
10, 40	1¼ – 3	350	350	350	ET	1¼ – 2	300	N/A	N/A	STF	1¼ – 4	N/A	N/A	300
	5 – 8	300	300	300	EZ	4 – 6	300[6]	N/A	300	Steady Thd.	1¼ – 2	N/A	N/A	300
BLT	1¼ – 2	300	300	N/A	FF	1¼ – 4	N/A	N/A	300	TF	3 – 8	N/A	N/A	300
DF	1¼ – 4	300	300	300	GAL -7	1¼ – 2	300	N/A	N/A	WLS	1¼ – 2	300	300	N/A
DT	1¼ – 2	300	300	N/A	MLT	1¼ – 2	300	N/A	N/A	XL	1¼ – 3	300	300	300
EF	1¼ – 4	175[7]	N/A	175	MF	1¼ – 4	300	N/A	300[5]					

[5] FM approved for service in 1 ½ – 4" pipe.

[6] UL Listed for service up to 4" pipe only.

[7] UL Listed for service up to 3" only.

 © 2024 Victaulic Company. All rights reserved.

6.0 NOTIFICATIONS

WARNING

- **Read and understand all instructions before attempting to install any Victaulic products.**
- **Always verify that the piping system has been completely depressurized and drained immediately prior to installation, removal, adjustment, or maintenance of any Victaulic products.**
- **Wear safety glasses, hardhat, and foot protection.**

Failure to follow these instructions could result in death or serious personal injury and property damage.

- **These products shall be used only in fire protection systems that are designed and installed in accordance with current, applicable National Fire Protection Association (NFPA 13, 13D, 13R, etc.) standards, or equivalent standards, and in accordance with applicable building and fire codes. These standards and codes contain important information regarding protection of systems from freezing temperatures, corrosion, mechanical damage, etc.**
- **The installer shall understand the use of this product and why it was specified for the particular application.**
- **The installer shall understand common industry safety standards and potential consequences of improper product installation.**
- **It is the system designer's responsibility to verify suitability of materials for use with the intended fluid media within the piping system and external environment.**
- **The material specifier shall evaluate the effect of chemical composition, pH level, operating temperature, chloride level, oxygen level, and flow rate on materials to confirm system life will be acceptable for the intended service.**

Failure to follow installation requirements and local and national codes and standards could compromise system integrity or cause system failure, resulting in death or serious personal injury and property damage.

NOTICE

- **Victaulic does not recommend the use of any furnace butt-welded pipe with sizes 2"/DN50 and smaller Victaulic gasketed joint products. This includes, but is not limited to, ASTM A53 Type F pipe.**

7.0 REFERENCE MATERIALS

10.01 Victaulic Products for Fire Protection Piping Systems – Regulatory Approval Reference Guide

I-100 Victaulic Field Installation Handbook

User Responsibility for Product Selection and Suitability
Each user bears final responsibility for making a determination as to the suitability of Victaulic products for a particular end-use application, in accordance with industry standards and project specifications, and the applicable building codes and related regulations as well as Victaulic performance, maintenance, safety, and warning instructions. Nothing in this or any other document, nor any verbal recommendation, advice, or opinion from any Victaulic employee, shall be deemed to alter, vary, supersede, or waive any provision of Victaulic Company's standard conditions of sale, installation guide, or this disclaimer.

Intellectual Property Rights
No statement contained herein concerning a possible or suggested use of any material, product, service, or design is intended, or should be constructed, to grant any license under any patent or other intellectual property right of Victaulic or any of its subsidiaries or affiliates covering such use or design, or as a recommendation for the use of such material, product, service, or design in the infringement of any patent or other intellectual property right. The terms "Patented" or "Patent Pending" refer to design or utility patents or patent applications for articles and/or methods of use in the United States and/or other countries.

Note
This product shall be manufactured by Victaulic or to Victaulic specifications. All products to be installed in accordance with current Victaulic installation/assembly instructions. Victaulic reserves the right to change product specifications, designs and standard equipment without notice and without incurring obligations.

Installation
Reference should always be made to the Victaulic installation handbook or installation instructions of the product you are installing. Handbooks are included with each shipment of Victaulic products, providing complete installation and assembly data, and are available in PDF format on WeChat.

Warranty
Refer to the Warranty section of the current Price List or contact Victaulic for details.

Trademarks
Victaulic and all other Victaulic marks are the trademarks or registered trademarks of Victaulic Company, and/or its affiliated entities, in the U.S. and/or other countries.

 © 2024 Victaulic Company. All rights reserved.

PAV

Potter Air Vent

Features

- UL Listed for Fire Sprinkler Branch line applications per UL subject 2573—"Automatic Air Release Valves for Fire Protection Service"
- FM Approved for "Automatic Air Release Valve for Sprinkler Systems"

FM APPROVED

UL LISTED

Description

The PAV is an automatic float type air vent used to reduce the amount of air trapped in a pressurized fire sprinkler system. Reducing the amount of air in a fire sprinkler system is essential to help protect the system piping from the effects of corrosion that is often found at the air/water interface in the fire sprinkler system piping.

Removing as much air as possible will also have a positive effect on the performance of vane type waterflow detectors. The operation of vane type waterflow detectors can be delayed or prevented if too much air is trapped in the system piping.

The intent of the product is to vent as much air from the fire sprinkler system as possible. The PAV provides automatic venting of air as the system is being filled. Furthermore, trapped air can also be vented as the air in the system migrates to the vent location over time. The air vent will automatically close when water reaches the vent. The PAV provides a 1/2" NPT-male connection which will allow installers to pipe the outlet to a drain or other suitable location if there are concerns of inadvertent water discharge.

Technical Specifications

Service Pressure	Up to 175 PSIG
Environmental Limitations	40°F to 270°F (4.5°C to 132°C)
Air Vent	1/2" NPT inlet / 1/2" outlet to drain 5/64" Orifice Brass Construction
Optional Accessories	Ball valve supervisory switch model RBVS (Supervisory switch only) Used to monitor the position of the isolation valve. Outdoor vent screen assembly for outdoor installations above 40°F. See Figure 2.

*Specifications subject to change without notice.

Installation

NOTICE

It is strongly recommended to install a ball valve in line with the PAV to assist in servicing the strainer without disabling the sprinkler system.

1. Read and understand the instructions provided before you proceed with installation. The PAV shall be installed in accordance with local ordinances and the applicable NFPA13, NFPA13D, or NFPA13R standard.
2. The Engineer of Record should select the Model PAV, Potter Air Vent installation location. Usually at a point in the system that will vent the most air.
3. The location of the PAV must not interfere with the spray pattern of any sprinkler head. The connection point must be off the top of the pipe. (See Fig. 1)
4. The piping must be level or pitch back toward the fire sprinkler system piping and arranged in such a manner that water will not become trapped. The outlet of the PAV contains a 1/2" male NPT threaded connection allowing the device to be piped to a drain or other suitable location if there are concerns about inadvertent water discharge.
5. Immediately after installation and filling of the fire sprinkler system, the PAV should be inspected for leaks and proper operation. The unit should be inspected periodically. Thereafter the manufacturer recommends quarterly or more frequently
6. Inspection should include removal and cleaning of the strainer screen. Remove the screen and flush with clean water. Use a wire brush if necessary to remove any particles trapped in the screen.

PAV and Shutoff Valve Replacement

The vent used in the PAV is not field replaceable. If the vent should fail, the entire unit must be replaced.

PAV Outline Drawing

Fig 1

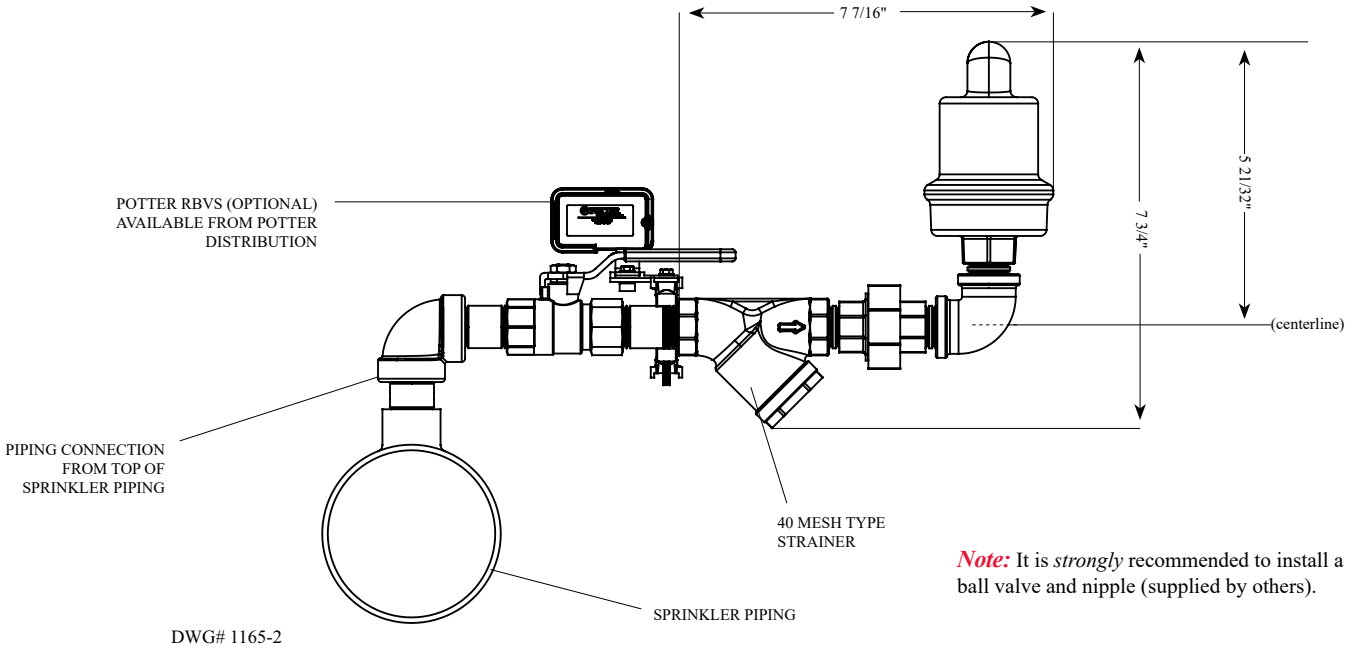

Note: It is *strongly* recommended to install a ball valve and nipple (supplied by others).

PAV Assembly

Fig 2

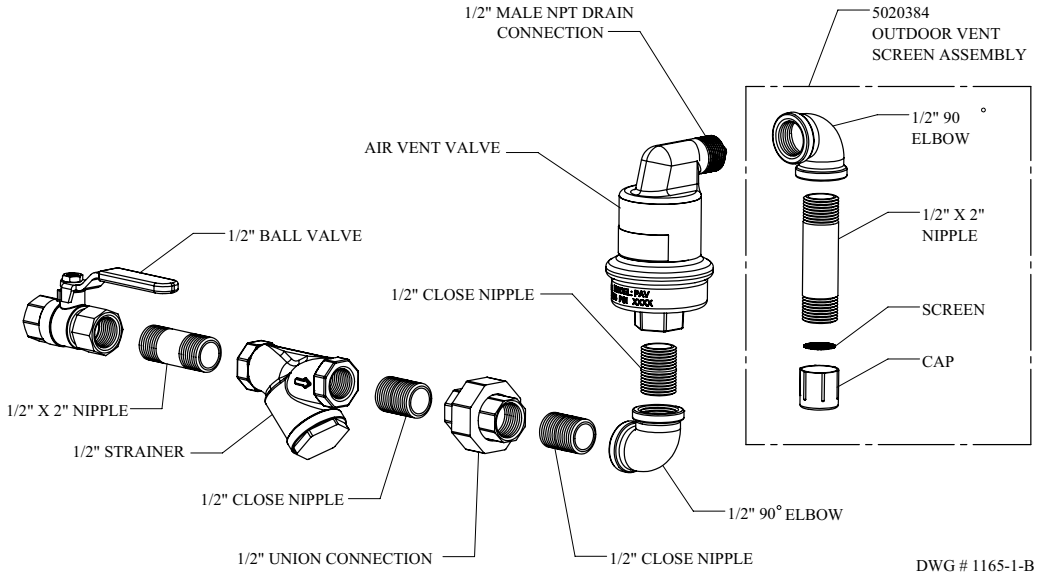

Note: It is *strongly* recommended to install a ball valve and nipple before the strainer. The ball valave and nipple are supplied by others.

Ordering Information

Model	Description	Part Number
PAV	Potter Air Vent	1119720
	Outdoor Vent Screen Assembly	5020384
RBVS	Retrofit Ball Valve Switch (w/o cover tamper)	1000040
RBVS-T	RBVS-T Retrofit Ball Valve Switch (with cover tamper)	1000035

Iron Body Grooved Check Valve

Horizontal Swing • Renewable Seat and Disc • AWWA C550 Epoxy Coated

300 PSI (20.7 BAR) Non-Shock Cold Water to 32°F (0°C) to 180°F (82°C)
Grooved End Connections 2" through 12" Sizes for Fire Protection Water Service

UL LISTED* • FM APPROVED**

MATERIAL LIST

	PART	SPECIFICATION
1.	Body	Ductile Iron ASTM A536 65-45-12
2.	Spring[1]	Stainless Steel S30400
3.	Hanger Pin	Stainless Steel S42000
4.	Hanger Arm	Ductile Iron ASTM A536 65-45-12
5.	Seat	Bronze ASTM B62
6.	Seat Disc[1]	EPDM
7.	Plate	Ductile Iron ASTM A536 65-45-12
8.	Washer[1]	Stainless Steel S30400
9.	Nut[1]	Stainless Steel S30400
10.	Stud[1]	Stainless Steel S30400
11.	Plug	Malleable Iron Galvanized
12.	Plug	Malleable Iron Galvanized
13.	Plug	Malleable Iron Galvanized
14.	Eyebolt	Steel Zinc Plated

*** Compliance with the Standard for Check Valves for Fire Protection Service, UL 312.**

****FM Approval Class 1210**

[1] Included in Repair Kit

Repair Kit Available

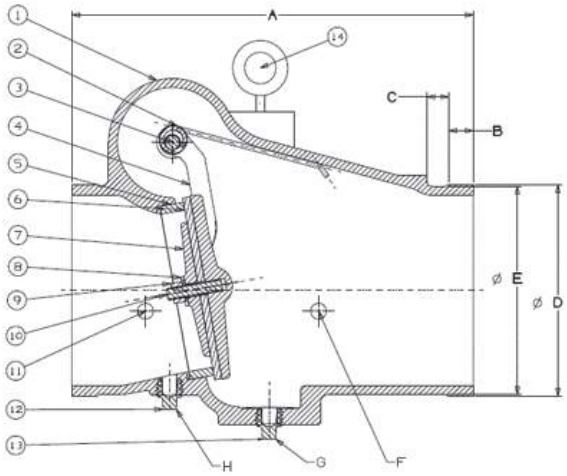

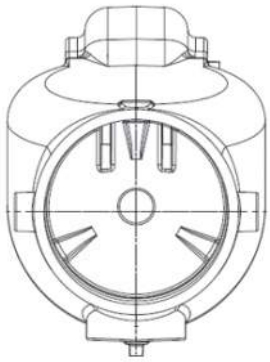

DIMENSIONS — WEIGHTS

VALVE SIZE inch	VALVE SIZE mm	A inch	A mm	B inch	B mm	C inch	C mm	ØD inch	ØD mm	ØE inch	ØE mm	F threads	G threads	H threads	WEIGHT lbs	WEIGHT kg	REPAIR KIT number
2	50	6.75	171	0.63	16	0.31	8	2.38	60	2.25	57	1/2" NPT	1/2" NPT	3/8" NPT	7	3.3	NLN303DS
2½	65	7.25	184	0.63	16	0.31	8	2.88	73	2.72	69	1/2" NPT	1/2" NPT	3/8" NPT	8	3.6	NLN303ES
3	80	7.75	197	0.63	16	0.31	8	3.50	89	3.34	85	1/2" NPT	1/2" NPT	3/8" NPT	10	4.7	NLN303FS
4	100	8.25	210	0.63	16	0.38	9.5	4.50	114	4.33	110	1/2" NPT	1/2" NPT	1/2" NPT	16	7.3	NLN303HS
5	125	9.85	248	0.63	16	0.38	9.5	5.56	141	5.39	137	1/2" NPT	1/2" NPT	1/2" NPT	20	9.9	NLN303JS
6	150	12.75	324	0.63	16	0.38	9.5	6.63	168	6.45	164	1/2" NPT	1/2" NPT	1/2" NPT	36	16.2	NLN303KS
8	200	14.62	371	0.75	19	0.44	11	8.63	219	8.44	214	1/2" NPT	1/2" NPT	1/2" NPT	60	27.2	NLN303LS
10	250	18.00	457	0.75	19	0.50	12.5	10.75	273	10.56	268	1/2" NPT	1/2" NPT	1/2" NPT	114	25.0	NLN303MS
12	300	21.00	535	0.75	19	0.50	12.5	12.75	324	12.53	318	1/2" NPT	1/2" NPT	1/2" NPT	166	75.7	NLN303NS

Visit our website for the most current information.

3M™ Fire Barrier Sealant CP 25WB+

Product Data Sheet

FIRE BARRIER

UP TO 4 HOUR Fire Protection

SMOKE SEAL

L RATED Meets Optional L Requirements

SOUND BARRIER

STC 54 In STC 54-rated wall assembly

CLASSIFIED UL

FILL, VOID OR CAVITY MATERIAL
FOR USE IN THROUGH-PENETRATION
FIRESTOP SYSTEMS
SEE UL FIRE RESISTANCE DIRECTORY
90G9

ULC LISTED

FILL, VOID OR CAVITY
MATERIALS
90G9

FM APPROVED

SUBJECT TO THE CONDITIONS OF APPROVAL
AS A WALL & FLOOR PENETRATION
FIRESTOP WHEN INSTALLED AS DESCRIBED
IN THE CURRENT EDITION OF THE FMRC
APPROVAL GUIDE

LISTED
OMEGA POINT LABORATORIES US
Intertek
FIRESTOP SYSTEMS
SEE INTERTEK DIRECTORY

LISTED
C US
Intertek
FIRESTOP SYSTEMS
SEE INTERTEK DIRECTORY

1. Product Description

3M™ Fire Barrier Sealant CP 25WB+ is a high-performance, ready-to-use, gun-grade, latex-based, intumescent sealant that dries to form a monolithic firestop seal that also acts as a barrier to airborne sound transmission. 3M™ Fire Barrier Sealant CP 25WB+ helps control the spread of fire, smoke and noxious gasses before, during and after exposure to a fire when installed in accordance with a listed through penetration or fire-resistive joint assembly system.

3M™ Fire Barrier Sealant CP 25WB+ firestops blank openings and penetrations passing through fire-rated floor, floor/ceiling or wall assemblies and other fire-rated interior building construction. The unique intumescent property of this material allows 3M™ Fire Barrier Sealant CP 25WB+ to expand and help maintain a firestop penetration seal for up to 4 hours as penetrants are exposed to fire. 3M™ Fire Barrier Sealant CP 25WB+ exhibits excellent adhesion to a full range of construction substrates and penetrants. No mixing is required.

High-performance firestop sealant that also helps minimize sound transfer

Product Color: Red

Product Features

- Firestop tested up to 4 hours in accordance with ASTM E 814 (UL 1479) & CAN/ULC S115
- Fire Resistance tested for static construction joint systems in accordance with ASTM E 1966 (UL 2079)
- Re-enterable / repairable
- Meets UL 1479 aging requirements
- Helps minimize sound transfer*
- Applied with conventional caulking equipment (excellent caulk rate)
- Extensive listed systems
- Sag-resistant
- Halogen-free
- Excellent adhesion
- Paintable
- Water clean up

Meets the intent of LEED® VOC regulations — helps reduce the quantity of indoor air contaminants that may be odorous, irritating and harmful to the comfort and well-being of the installers and occupants. <250 g/L VOC contents (less H_2O and exempt solvents).

**Minimizes noise transfer — STC-Rating of 54 when tested in STC 54-rated wall assembly.*

2. Applications

High-performance 3M™ Fire Barrier Sealant CP 25WB+ is ideal for sealing single or multiple through penetrations in fire-rated construction. 3M™ Fire Barrier Sealant CP 25WB+ is typically used in mechanical, electrical and plumbing applications to firestop openings created by the following penetrations in fire-rated floors, floor/ceilings or walls: metallic pipe, plastic pipe (excluding CPVC), conduit, power and communication cable, cable trays, busways, combos, insulated pipe and HVAC duct penetrations 3M™ Fire Barrier Sealant CP 25WB+ is also used to firestop blank openings and static construction joints.

3. Specifications

3M™ Fire Barrier Sealant CP 25WB+ shall be a one component, ready-to-use, gun-grade, latex-based, intumescent firestop sealant capable of expanding a minimum of three times its dried volume when exposed to temperatures above 1000°F (538°C). The material shall be thixotropic and shall be applicable to overhead, vertical and horizontal firestops. The sealant shall be listed by independent test agencies such as UL, Intertek or FM. 3M™ Fire Barrier Sealant CP 25WB+ shall be tested to and pass the criteria of ASTM E 814 (UL 1479) Standard Test Method for Fire Tests of Penetration Firestop Systems, ASTM E 1966 (UL 2079) Standard Test Method for Fire Resistive Joint Systems and CAN/ULC S115 Standard Method of Fire Tests of Firestop Systems. 3M™ Fire Barrier Sealant CP 25WB+ meets the requirements of the IBC, IRC, IFC, IPC, IMC, NFPA 5000, NEC (NFPA 70) and NFPA 101.

Typically Specified Division
Division 7
Section 07 84 00 – Firestopping

Related Sections
Section 07 84 16 – Annular Space Protection
Section 07 84 43 – Fire-Resistant Joint Sealants
Section 07 86 00 – Smoke Seals
Section 07 87 00 – Smoke Containment Barriers
Section 07 27 00 – Air Barriers
Section 21 00 00 – Fire Suppression
Section 22 00 00 – Plumbing
Section 26 00 00 – Electrical

4. Physical Properties

Color:	Red
Application Temperature Range (ASTM C 1299)**:**	40° to 122°F (4° to 50°C)
Service Temperature Range:	-20° to 180°F (-28° to 82°C)
STC (ASTM E 90 and ASTM E 413)**:**	54 when tested in STC 54-rated wall assembly
Surface Burning (ASTM E 84)**:**	Flame Spread 0, Smoke Development 0

Hardness (ASTM D 2240 Shore A)**:**	45
Tensile Strength:	85 psi (0.59 MPa)
Volume Shrinkage (ASTM C 1241)**:**	28%
VOC Less H_2O and Exempt Solvents:	< 1 g/L

Dry: Under typical conditions of 75°F (23°C) and 50% relative humidity, sealant becomes tack-free in about ten minutes and dry-to-touch in 30–60 minutes. Full dry depends upon ambient conditions and volume of sealant. Typical dry rate is approximately 1/8-inch (3mm) per day.

Unit Volume: 10.1 fl. oz. tube (298.7mL, 18.2 in.^{3}), 20 fl. oz. sausage (591.5mL, 36.1 in.^{3}), 27 fl. oz tube (798.5mL, 48.7 in.^{3}), 2 gallon pail (7.57L, 462 in.^{3}), 5 gallon pail (18.9L, 1155 in.^{3})

5. Packaging, Storage, Shelf Life

Packaging: Product packaged in cartridge or pail is enclosed in HDPE plastic containers, sausage is packaged in aluminum foil wrap.

Storage: 3M™ Fire Barrier Sealant CP 25WB+ should be stored indoors in dry conditions between 40°F and 90°F (4°C and 32°C) in the original unopened package. Avoid repeated freeze / thaw exposures of the 3M™ Fire Barrier Sealant CP 25WB+ prior to installation.

Shelf Life: 3M™ Fire Barrier Sealant CP 25WB+ shelf life is 12 months in original unopened containers from date of packaging when stored above 68°F (20°C).

Lot numbering (e.g. 8183AS): First digit = Last digit of year manufactured, Second to fourth digit = Julian Date, Letters = Random to distinguish between lot numbers

6. Installation Techniques

Consult a 3M Authorized Fire Protection Products Distributor / Dealer or Sales Representative for Applicable UL, Intertek or other third-party drawings and system details.

Preparatory Work: The surface of the opening and any penetrating items should be cleaned to allow for the proper adhesion of the 3M™ Fire Barrier Sealant CP 25WB+. Ensure that the surface of the substrates are not wet and are frost free. Sealant can be installed with a standard caulking gun, pneumatic pumping equipment or it can be easily applied with a putty knife or trowel.

Installation Details: Install the applicable depth of backing material, if required, as detailed within the applicable UL, Intertek, FM or other third-party listed system. Cut the end of the 3M™ Fire Barrier Sealant CP 25WB+ tube spout to achieve the desired bead width when applying. Install the applicable depth of 3M™ Fire Barrier Sealant CP 25WB+ into the opening flush with the surface of the substrate, or as detailed within the applicable listed system, at the depth for the assembly and rating that is required. Tool within five minutes. Clean all tools immediately after use with water.

Limitations: Do not apply 3M™ Fire Barrier Sealant CP 25WB+ when surrounding temperature is less than 40°F (4°C) and in conditions where seals may be exposed to rain or water spray within 18 hours of application. Do not apply 3M™ Fire Barrier Sealant CP 25WB+ to building materials that bleed oil, plasticizers or solvent (e.g. impregnated wood, oil-based sealants, or green or partially vulcanized rubber). Do not apply 3M™ Fire Barrier Sealant CP 25WB+ to wet or frost-coated surfaces or to areas that are continuously damp or immersed in water.

NOTICE: This product is not acceptable for use with chlorinated polyvinylchloride (CPVC) pipes.

7. Maintenance

No maintenance should be required when installed in accordance with the applicable UL, Intertek, FM or other third-party listed system. Once installed, if any section of the 3M™ Fire Barrier Sealant CP 25WB+ is damaged, the following procedure will apply: remove and reinstall the damaged section in accordance with the applicable listed system, with a minimum 1/2 in. (12.7mm) overlap onto the adjacent material.

8. Availability

3M™ Fire Barrier Sealant CP 25WB+ is available from 3M Authorized Fire Protection Products Distributors and Dealers. 3M™ Fire Barrier Sealant CP 25WB+ is available in 10.1 fl. oz. cartridges (12/case), 20.0 fl. oz. sausages (10/case), 27.0 fl. oz. cartridges (6/case), 2 gallon pails (1/case) and 5 gallon pails (1/case). For additional technical and purchasing information regarding this and other 3M™ Fire Protection Products, please call: 1-800-328-1687 or visit www.3M.com/firestop.

9. Safe Handling Information

Consult product Material Safety Data Sheet (MSDS) prior to handling and disposal.

3M Industrial Adhesives and Tapes Division
3M Center, Building 225-3S-06
St. Paul, MN 55144-1000 USA
1-800-362-3550
www.3M.com/IATD

Important Notice to User:

Technical Information: The technical information, recommendations and other statements contained in this document are based upon tests or experience that 3M believes are reliable, but the accuracy or completeness of such information is not guaranteed.

Product Use: Many factors beyond 3M's control and uniquely within user's knowledge and control can affect the use and performance of a 3M product in a particular application. Given the variety of factors that can affect the use and performance of a 3M product, user is solely responsible for evaluating the 3M product and determining whether it is fit for a particular purpose and suitable for user's method of application.

Warranty and Limited Remedy: 3M warrants that each 3M Fire Protection Product will be free from defects in material and manufacture for 90 days from the date of purchase from 3M's authorized distributor. 3M MAKES NO OTHER EXPRESS OR IMPLIED WARRANTIES, INCLUDING ANY IMPLIED WARRANTY OF MERCHANTABILITY OR FITNESS FOR A PARTICULAR PURPOSE. If a 3M product does not conform to this warranty, the sole and exclusive remedy is, at 3M's option, replacement of the 3M product or refund of the purchase price.

Limitation of Liability: Except where prohibited by law, 3M will not be liable for any loss or damage arising from the 3M product, whether direct, indirect, special, incidental or consequential, regardless of the legal theory asserted.

Please Recycle. Printed in U.S.A. © 3M 2016. All rights reserved.
Literature Order Info: 98-0400-5012-6

3M is a trademark of 3M Company. All other trademarks are the property of their respective owners.

The following excerpt are pages from the North American Product Technical Guide, Volume 2: Anchor Fastening, Edition 22.

Please refer to the publication in its entirety for complete details on this product including data development, product specifications, general suitability, installation, corrosion and spacing and edge distance guidelines.
US&CA: https://submittals.us.hilti.com/PTGVol2/

To consult directly with a team member regarding our anchor fastening products, contact Hilti's team of technical support specialists between the hours of 7:00am – 6:00pm CST.
US: 877-749-6337 or HNATechnicalServices@hilti.com
CA: 1-800-363-4458, ext. 6 or CATechnicalServices@hilti.com

Hilti, Inc.
7250 Dallas Parkway, Suite 1000
Plano, TX 75024

1-800-879-8000
www.hilti.com

3.3.5 KWIK BOLT TZ2 EXPANSION ANCHOR

PRODUCT DESCRIPTION

KWIK BOLT TZ2 Expansion anchor

Anchor System	Features and Benefits
Carbon steel KB-TZ2 Stainless Steel 304/316 KB-TZ2	• IFU provides multiple installation methods including no hole cleaning with hammer drill, Hilti Dust Removal System (DRS) for virtually dustless installation (OSHA 1926.1153 Table 1 compliant) and core drilling installation. • More accurate SafeSet™ installation when using the Hilti SIW-6AT-A22 impact wrench and the SI-AT-A22 Adaptive Torque Module. • Product and length identification marks help facilitate quality control after installation. • Maximized thread lengths and multiple embedment depths to accommodate various base plate thicknesses. • Mechanical expansion allows immediate load application. • Raised impact section (dog point) helps protect threads from damage during installation. • Bolt meets ductility requirements of ACI 318 Section 2.3. • Functional coatings and profile on expansion wedges provide increased reliability.

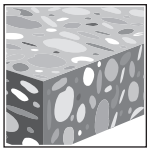
Uncracked concrete

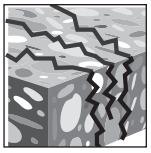
Cracked concrete

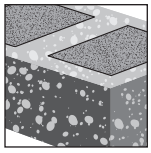
Grout-filled concrete masonry

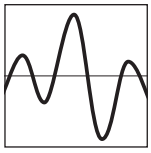
Seismic Design Categories A-F

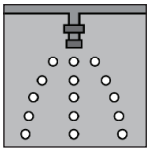
Fire sprinkler listings

Profis Engineering design software

Hollow Drill Bit and Adaptive Torque Tool (AT)

Approvals/ Listings

ICC-ES (International Code Council) • 2021 International Building Code / International Residential Code (IBC/IRC) • 2015 National Building Code of Canada (NBC-C)	ESR-4266 in concrete per ACI 318 Ch. 17 / ACI 355.2/ ICC-ES AC193 ESR-4561 in grout-filled CMU per ICC-ES AC01 ELC-4266 in concrete per CSA A23.3 / ACI 355.2
City of Los Angeles	2020 LABC Supplement (within ESR-4266 & ESR-4561)
Florida Building Code	2020 FBC Supplement with HVHZ (within ESR-4266 & ESR-4561)
FM (Factory Mutual) — Carbon steel KB-TZ2 only	Pipe hanger components for automatic sprinkler systems 3/8 (up to 4-inch nominal pipe diameter) 1/2[1] (up to 8-inch nominal pipe diameter) 3/4 (up to 12-inch nominal pipe diameter)
UL and cUL (Underwriters Laboratory) — Carbon steel KB-TZ2 only	Pipe hanger equipment for fire protection services 3/8 (up to 4-inch nominal pipe diameter) 1/2[1] (up to 8-inch nominal pipe diameter) 5/8 & 3/4 (up to 12-inch nominal pipe diameter)
ANSI/MSS SP-58-2018	Anchors conform to ANSI/MSSP-58-2018. Contact Hilti for more information.

1 1/2-inch dia. with 1-1/2-inch effective embedment does not have FM or UL certification.

FM APPROVED

CLASSIFIED c UL us LISTED
Pipe Hanger 757G

MATERIAL SPECIFICATIONS

Carbon steel with electroplated zinc-nickel plating

- Carbon steel anchor components plated in accordance with ASTM F1941 to a minimum thickness of 5 µm.
- Nuts conform to the requirements of ASTM A563, Grade A, Hex.
- Washers meet the requirements of ASTM F844.
- Expansion sleeves (wedges) are manufactured from carbon or stainless steel.
- Nuts and bolts are finished with a proprietary coating. Only Hilti KB-TZ2 nuts can be used with KB-TZ2 bolts.
- Carbon steel bolts are manufactured from carbon steel.

Stainless steel

- All nuts and washers for type 304 anchors are made from type 304 stainless.
- All nuts and washers for type 316 anchors are made from type 316 stainless.
- Nuts meet the dimensional requirements of ASTM F594.
- Washers meet the dimensional requirements of ANSI B18.22.1, Type A, plain.
- Expansion sleeve (wedges) are made from stainless steel.
- Nuts and bolts are finished with a proprietary coating. Only Hilti KB-TZ2 nuts can be used with KB-TZ2 bolts.
- Stainless steel 304 bolts are manufactured from AISI Type 304 stainless steel.
- Stainless steel 316 bolts are manufactured from AISI Type 316 stainless steel.

INSTALLATION PARAMETERS

Table 1 — Hilti KB-TZ2 setting information for installation in concrete and grout-filled concrete masonry units (CMU)[1]

Setting information		Symbol	Units	Nominal anchor diameter (in)															
				1/4	3/8			1/2				5/8			3/4			1	
Nominal bit diameter		d_o	in.	1/4	3/8			1/2				5/8			3/4			1	
Effective minimum embedment		h_{ef}	in.	1-1/2	1-1/2	2	2-1/2	1-1/2 [2]	2	2-1/2	3-1/4	2-3/4	3-1/4	4	3-1/4	3-3/4	4-3/4	4	5-3/4
			(mm)	(38)	(38)	(51)	(64)	(38)	(51)	(64)	(83)	(70)	(83)	(102)	(83)	(95)	(121)	(102)	(146)
Nominal minimum embedment		h_{nom}	in.	1-3/4	1-7/8	2-1/2	3	2 2)	2-1/2	3	3-3/4	3-1/4	3-3/4	4-1/2	4	4-1/2	5-1/2	4-5/8	6-3/8
			(mm)	(44)	(48)	(64)	(76)	(51)	(64)	(76)	(95)	(83)	(95)	(114)	(102)	(114)	(140)	(117)	(162)
Min. hole depth		h_o	in.	2	2	2-3/4	3-1/4	2-1/4 [2]	2-3/4	3-1/4	4-1/4	3-3/4	4-1/4	4-3/4	4-1/4	4-3/4	5-3/4	5	6-3/4
			(mm)	(51)	(51)	(70)	(83)	(57)	(70)	(83)	(108)	(95)	(108)	(121)	(108)	(121)	(146)	(127)	(171)
Fixture hole diameter		d_h	in.	5/16	7/16			9/16				11/16			13/16			1-1/8	
			(mm)	(7.9)	(11.1)			(14.3)				(17.5)			(20.6)			(28.6)	
Concrete	Installation torque Carbon steel	$T_{inst,conc}$	ft-lb	4	30			50				40			110			185	
			(Nm)	(5)	(41)			(68)				(54)			(149)			(251)	
	Installation torque Stainless steel	$T_{inst,conc}$	ft-lb	6	30			40				60			125			185	
			(Nm)	(8)	(41)			(54)				(81)			(169)			(251)	
Grout-filled CMU	Installation torque Carbon steel	$T_{inst,CMU}$	ft-lb	4	15			25				30			50			N/A	
			(Nm)	(5)	(20)			(34)				(41)			(68)			N/A	
	Installation torque Stainless steel	$T_{inst,CMU}$	ft-lb	6	15			25				35			50			N/A	
			(Nm)	(8)	(20)			(34)				(48)			(68)			N/A	

1 Shaded cells are not applicable for installations in grout-filled CMU.
2 Design information for h_{ef} = 1-1/2 is only applicable to carbon steel (CS) KB-TZ2 bolts.

Hilti KWIK Bolt TZ2 Fracture Load (lb)[1]

Nominal Anchor Diameter (in)	Carbon Steel	Stainless Steel
1/4	2920	2920
3/8	6490	6180
1/2	11240	11870
5/8	17535	18835
3/4	25335	$f_{uta} \geq 105$, $f_y \geq 84$ [2]
1	$f_{uta} \geq 88$, $f_y \geq 75$ [2]	$f_{uta} \geq 99.9$, $f_y \geq 65$ [2]

1 Bolt fracture loads are determined by testing in a universal tensile machine for quality control at the manufacturing facility. These loads are not intended for design use.
2 All 3/4-in. stainless steel, all 1-in. carbon steel and all 1-in. stainless steel material strengths specified by the tensile and yield strengths expressed in (ksi). Bolt fracture loads not applicable for these models.

Figure 1 — Hilti KWIK Bolt TZ 2 specifications

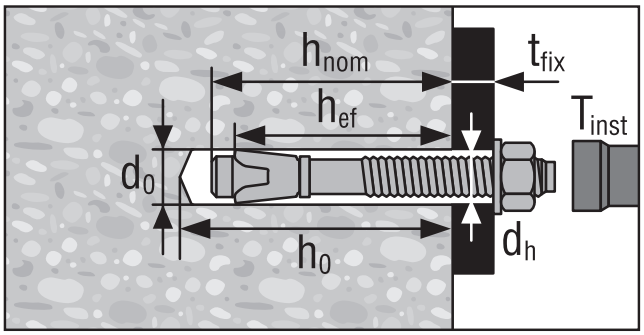

DESIGN INFORMATION IN CONCRETE PER ACI 318

ACI 318 Chapter 17 Design

The load values contained in this section are Hilti Simplified Design Tables. The load tables in this section were developed using the Strength Design parameters and variables of ICC-ES ESR-4266 and the equations within ACI 318 Chapter 17. For a detailed explanation of the Hilti Simplified Design Tables refer to section 3.1.8. Data tables from ESR-4266 are not contained in this section but can be found at www.icc-es.org or at www.hilti.com

Table 2 — Hilti Carbon Steel KB-TZ2 design strength based on concrete failure modes in uncracked concrete per ACI 318 Ch. 17, applicable for both hammer and core drilled installations [1,2,3,4]

Nominal anchor diameter in.	Effective embedment in. (mm)	Nominal embedment in. (mm)	Tension (lesser of concrete breakout / pullout) - ΦN_n				Shear (lesser of concrete breakout or pryout) - ΦV_n			
			f'_c = 2,500 psi (17.2 MPa) lb (kN)	f'_c = 3,000 psi (20.7 MPa) lb (kN)	f'_c = 4,000 psi (27.6 MPa) lb (kN)	f'_c = 6,000 psi (41.1 MPa) lb (kN)	f'_c = 2,500 psi (17.2 MPa) lb (kN)	f'_c = 3,000 psi (20.7 MPa) lb (kN)	f'_c = 4,000 psi (27.6 MPa) lb (kN)	f'_c = 6,000 psi (41.1 MPa) lb (kN)
1/4	1-1/2 (38)	1 3/4 (44)	945 (4.2)	980 (4.4)	1,040 (4.6)	1,125 (5.0)	1,545 (6.9)	1,690 (7.5)	1,950 (8.7)	2,390 (10.6)
3/8	1-1/2 (38)	1 7/8 (48)	1,435 (6.4)	1,570 (7.0)	1,815 (8.1)	2,220 (9.9)	1,545 (6.9)	1,690 (7.5)	1,950 (8.7)	2,390 (10.6)
	2 (51)	2 1/2 (64)	2,205 (9.8)	2,415 (10.7)	2,790 (12.4)	3,420 (15.2)	2,375 (10.6)	2,605 (11.6)	3,005 (13.4)	3,680 (16.4)
	2-1/2 (64)	3 (76)	2,715 (12.1)	2,895 (12.9)	3,205 (14.3)	3,690 (16.4)	6,640 (29.5)	7,275 (32.4)	8,400 (37.4)	10,290 (45.8)
1/2	1-1/2 (38)	2 (51)	1,610 (7.2)	1,765 (7.9)	2,040 (9.1)	2,495 (11.1)	1,735 (7.7)	1,900 (8.5)	2,195 (9.8)	2,690 (12.0)
	2 (51)	2 1/2 (64)	2,480 (11.0)	2,720 (12.1)	3,140 (14.0)	3,845 (17.1)	2,675 (11.9)	2,930 (13.0)	3,380 (15.0)	4,140 (18.4)
	2-1/2 (64)	3 (76)	3,085 (13.7)	3,375 (15.0)	3,900 (17.3)	4,775 (21.2)	6,640 (29.5)	7,275 (32.4)	8,400 (37.4)	10,290 (45.8)
	3-1/4 (83)	3 3/4 (95)	4,570 (20.3)	5,005 (22.3)	5,780 (25.7)	7,080 (31.5)	9,845 (43.8)	10,785 (48.0)	12,450 (55.4)	15,250 (67.8)
5/8	2-3/4 (70)	3 1/4 (83)	3,495 (15.5)	3,830 (17.0)	4,425 (19.7)	5,420 (24.1)	7,660 (34.1)	8,395 (37.3)	9,690 (43.1)	11,870 (52.8)
	3-1/4 (83)	3 3/4 (95)	4,570 (20.3)	5,005 (22.3)	5,780 (25.7)	7,080 (31.5)	9,845 (43.8)	10,785 (48.0)	12,450 (55.4)	15,250 (67.8)
	4 (102)	4 1/2 (114)	5,845 (26.0)	6,405 (28.5)	7,395 (32.9)	9,060 (40.3)	13,440 (59.8)	14,725 (65.5)	17,000 (75.6)	20,820 (92.6)
3/4	3-1/4 (83)	4 (102)	5,140 (22.9)	5,630 (25.0)	6,505 (28.9)	7,965 (35.4)	11,075 (49.3)	12,130 (54.0)	14,005 (62.3)	17,155 (76.3)
	3-3/4[5] (95)	4 1/2 (114)	6,370 (28.3)	6,980 (31.0)	8,060 (35.9)	9,870 (43.9)	13,725 (61.1)	15,035 (66.9)	17,360 (77.2)	21,265 (94.6)
	4-3/4 (121)	5 1/2 (140)	8,075 (35.9)	8,845 (39.3)	10,215 (45.4)	12,510 (55.6)	17,390 (77.4)	19,050 (84.7)	22,000 (97.9)	26,945 (119.9)
1	4 (102)	4 5/8 (117)	7,020 (31.2)	7,690 (34.2)	8,880 (39.5)	10,875 (48.4)	15,120 (67.3)	16,565 (73.7)	19,125 (85.1)	23,425 (104.2)
	5-3/4 (146)	6 3/8 (162)	10,755 (47.8)	11,780 (52.4)	13,605 (60.5)	16,660 (74.1)	23,165 (103.0)	25,375 (112.9)	29,300 (130.3)	35,885 (159.6)

1 See Section 3.1.8 to convert design strength value to ASD value.
2 Linear interpolation between embedment depths and concrete compressive strengths is not permitted.
3 Apply spacing, edge distance, and concrete thickness factors in tables 6 to 15 as necessary. Compare to the steel values in table 4. The lesser of the values is to be used for the design.
4 Tabular values are for normal weight concrete only. For lightweight concrete multiply design strength by λ_a as follows: For sand-lightweight, λ_a = 0.68; for all-lightweight, λ_a = 0.60.
5 For core drilled installations of 3/4" anchors installed at 3-3/4" effective embedment, apply a reduction factor of 0.89 to the design tension strength.

Table 3 — Hilti Carbon Steel KB-TZ2 design strength based on concrete failure modes in cracked concrete per ACI 318 Ch. 17, applicable for both hammer and core drilled installations [1,2,3,4,5]

Nominal anchor diameter in.	Effective embedment in. (mm)	Nominal embedment in. (mm)	Tension (lesser of concrete breakout / pullout) - ΦN_n				Shear (lesser of concrete breakout or pryout) - ΦV_n			
			f'_c = 2,500 psi (17.2 MPa) lb (kN)	f'_c = 3,000 psi (20.7 MPa) lb (kN)	f'_c = 4,000 psi (27.6 MPa) lb (kN)	f'_c = 6,000 psi (41.1 MPa) lb (kN)	f'_c = 2,500 psi (17.2 MPa) lb (kN)	f'_c = 3,000 psi (20.7 MPa) lb (kN)	f'_c = 4,000 psi (27.6 MPa) lb (kN)	f'_c = 6,000 psi (41.1 MPa) lb (kN)
1/4	1-1/2 (38)	1 3/4 (44)	280 (1.2)	300 (1.3)	340 (1.5)	395 (1.8)	1,095 (4.9)	1,195 (5.3)	1,385 (6.2)	1,695 (7.5)
3/8	1-1/2 (38)	1 7/8 (48)	1,255 (5.6)	1,375 (6.1)	1,585 (7.1)	1,940 (8.6)	1,350 (6.0)	1,480 (6.6)	1,710 (7.6)	2,090 (9.3)
	2 (51)	2 1/2 (64)	1,930 (8.6)	2,115 (9.4)	2,440 (10.9)	2,990 (13.3)	2,080 (9.3)	2,275 (10.1)	2,630 (11.7)	3,220 (14.3)
	2-1/2 (64)	3 (76)	2,185 (9.7)	2,390 (10.6)	2,765 (12.3)	3,385 (15.1)	4,705 (20.9)	5,155 (22.9)	5,950 (26.5)	7,285 (32.4)
1/2	1-1/2 (38)	2 (51)	1,435 (6.4)	1,570 (7.0)	1,815 (8.1)	2,220 (9.9)	1,545 (6.9)	1,690 (7.5)	1,950 (8.7)	2,390 (10.6)
	2 (51)	2 1/2 (64)	1,930 (8.6)	2,115 (9.4)	2,440 (10.9)	2,990 (13.3)	2,080 (9.3)	2,275 (10.1)	2,630 (11.7)	3,220 (14.3)
	2-1/2 (64)	3 (76)	2,700 (12.0)	2,955 (13.1)	3,415 (15.2)	4,180 (18.6)	5,810 (25.8)	6,365 (28.3)	7,350 (32.7)	9,000 (40.0)
	3-1/4 (83)	3 3/4 (95)	3,235 (14.4)	3,545 (15.8)	4,095 (18.2)	5,015 (22.3)	6,970 (31.0)	7,640 (34.0)	8,820 (39.2)	10,800 (48.0)
5/8	2-3/4 (70)	3 1/4 (83)	3,110 (13.8)	3,410 (15.2)	3,935 (17.5)	4,820 (21.4)	6,705 (29.8)	7,345 (32.7)	8,480 (37.7)	10,385 (46.2)
	3-1/4 (83)	3 3/4 (95)	4,000 (17.8)	4,380 (19.5)	5,060 (22.5)	6,195 (27.6)	8,615 (38.3)	9,435 (42.0)	10,895 (48.5)	13,345 (59.4)
	4 (102)	4 1/2 (114)	4,420 (19.7)	4,840 (21.5)	5,590 (24.9)	6,845 (30.4)	9,520 (42.3)	10,430 (46.4)	12,040 (53.6)	14,750 (65.6)
3/4	3-1/4 (83)	4 (102)	4,000 (17.8)	4,380 (19.5)	5,060 (22.5)	6,195 (27.6)	8,615 (38.3)	9,435 (42.0)	10,895 (48.5)	13,345 (59.4)
	3-3/4 (95)	4 1/2 (114)	4,955 (22.0)	5,430 (24.2)	6,270 (27.9)	7,680 (34.2)	10,675 (47.5)	11,695 (52.0)	13,505 (60.1)	16,540 (73.6)
	4-3/4 (121)	5 1/2 (140)	5,745 (25.6)	6,055 (26.9)	6,580 (29.3)	7,405 (32.9)	15,220 (67.7)	16,670 (74.2)	19,250 (85.6)	23,575 (104.9)
1	4 (102)	4 5/8 (117)	5,460 (24.3)	5,980 (26.6)	6,905 (30.7)	8,460 (37.6)	11,760 (52.3)	12,880 (57.3)	14,875 (66.2)	18,220 (81.0)
	5-3/4 (146)	6 3/8 (162)	7,675 (34.1)	8,410 (37.4)	9,710 (43.2)	11,890 (52.9)	20,270 (90.2)	22,205 (98.8)	25,640 (114.1)	31,400 (139.7)

1 See Section 3.1.8 to convert design strength value to ASD value.
2 Linear interpolation between embedment depths and concrete compressive strengths is not permitted.
3 Apply spacing, edge distance, and concrete thickness factors in tables 6 to 17 as necessary. Compare to the steel values in table 4. The lesser of the values is to be used for the design.
4 Tabular values are for normal weight concrete only. For lightweight concrete multiply design strength by λ_a as follows: For sand-lightweight, λ_a = 0.68; for all-lightweight, λ_a = 0.60.
5 Tabular values are for static loads only. Seismic design is not permitted for uncracked concrete. For seismic tension loads, multiply cracked concrete tabular values in tension only by $\alpha_{N,seis}$ = 0.75, except for 3/4 x 4-3/4 h_{ef} where $\alpha_{N,seis}$ = 0.73. No reduction needed for seismic shear. See Section 3.1.8 for additional information on seismic applications.

Table 4 — Hilti Carbon Steel KB-TZ2 design strength based on steel failure per ACI 318 Ch. 17 [1,2]

Nominal anchor diameter in.	Effective embedment depth in. (mm)			Tensile [3] ΦN_{sa} lb (kN)	Shear [4] ΦV_{sa} lb (kN)	Seismic Shear [5] ΦV_{sa} lb (kN)
1/4	1-1/2 (38)			2,190 (9.7)	875 (3.9)	875 (3.9)
3/8	1-1/2 (38)			4,870 (21.7)	2,095 (9.3)	2,095 (9.3)
3/8	2 (51)		2-1/2 (64)	4,870 (21.7)	2,200 (9.8)	2,200 (9.8)
1/2	1-1/2 (38)		2 (51)	8,430 (37.5)	3,600 (16.0)	3,600 (16.0)
1/2	2-1/2 (64)		3-1/4 (83)	8,430 (37.5)	4,470 (19.9)	4,470 (19.9)
5/8	2-3/4 (70)	3-1/4 (83)	4 (102)	13,150 (58.5)	6,665 (29.6)	6,665 (29.6)
3/4	3-1/4 (83)	3-3/4 (95)	4-3/4 (121)	19,000 (84.5)	8,975 (39.9)	8,975 (39.9)
1 (25.4)	4 (102)			31,025 (138.0)	12,215 (54.3)	8,975 (39.9)
1 (25.4)	5-3/4 (146)			31,025 (138.0)	14,875 (66.2)	8,975 (39.9)

1 See Section 3.1.8 to convert design strength value to ASD value.
2 Hilti KB-TZ2 carbon steel anchors are to be considered ductile steel elements.
3 Tensile $\phi N_{sa} = \phi A_{se,N} f_{uta}$ as noted in ACI 318 Ch. 17.
4 Shear values determined by static shear tests with $\phi V_{sa} < \phi\ 0.60\ A_{se,V} f_{uta}$ as noted in ACI 318 Ch. 17.
5 Seismic shear values determined by seismic shear tests with $\phi V_{sa} \leq \phi\ 0.60\ A_{se,V} f_{uta}$ as noted in ACI 318 Ch. 17. See Section 3.1.8 for additional information on seismic applications.

Figure 2

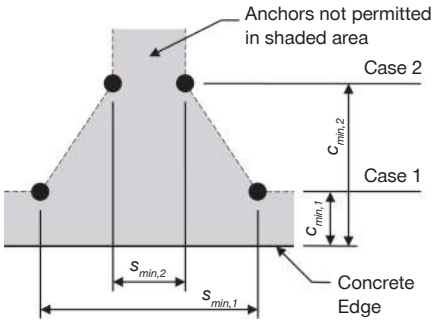

For a specific edge distance, the permitted spacing is calculated as follows:

$$s \geq s_{min,2} + \frac{(s_{min,1} - s_{min,2})}{(c_{min,1} - c_{min,2})}(c - c_{min,2})$$

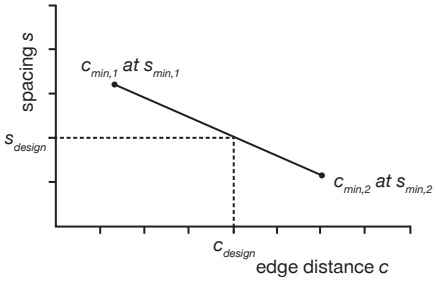

Table 5 — Hilti KB-TZ2 carbon steel installation parameters [1]

Setting information	Symbol	Units	Nominal Anchor diameter (in.)															
			1/4	3/8			1/2				5/8			3/4			1	
Effective embedment	h_{ef}	in.	1-1/2	1-1/2	2	2-1/2	1-1/2	2	2-1/2	3 1/4	2-3/4	3-1/4	4	3-1/4	3-3/4	4-3/4	4	5-3/4
		(mm)	(38)	(38)	(51)	(64)	(38)	(51)	(64)	(83)	(70)	(83)	(102)	(83)	(95)	(121)	(102)	(146)
Min. member thickness	h_{min}	in.	3-1/4	3-1/4	4	5	3-1/2	4	5	5-1/2	5	5-1/2	6	5-1/2	6	8	8	10
		(mm)	(83)	(83)	(102)	(127)	(89)	(102)	(127)	(140)	(127)	(140)	(152)	(140)	(152)	(203)	(203)	(254)
Case 1	$c_{min,1}$	in.	1-1/2	5	2-1/2	2-1/2	8	2-3/4	2-3/4	2-1/4	4-1/2	3-1/2	2-3/4	5	4	3-1/2	8	3
		(mm)	(38)	(127)	(64)	(64)	(203)	(70)	(70)	(57)	(114)	(89)	(70)	(127)	(102)	(89)	(203)	(76)
	for $s_{min,1} \geq$	in.	1-1/2	8	6	5	12	5-1/2	9-3/4	5-1/4	6-1/2	5-1/2	7-1/4	10	5-3/4	5-1/2	8	6-3/4
		(mm)	(38)	(203)	(152)	(127)	(305)	(140)	(248)	(133)	(165)	(140)	(184)	(254)	(146)	(140)	(203)	(171)
Case 2	$c_{min,2}$	in.	1-1/2	8	3-1/2	4	8	10	8	4-3/4	5-1/2	7	4-1/4	6	7-1/4	4-3/4	8	3-3/4
		(mm)	(38)	(203)	(89)	(102)	(203)	(254)	(203)	(121)	(140)	(178)	(108)	(152)	(184)	(121)	(203)	(95)
	for $s_{min,2} \geq$	in.	1-1/2	5	2-1/4	2	12	3-1/2	3	2	4-1/2	2-3/4	2-1/4	4-1/2	3-3/4	3-3/4	8	4-3/4
			(38)	(127)	(57)	(51)	(305)	(89)	(76)	(51)	(114)	(70)	(57)	(114)	(95)	(95)	(203)	(121)

1 Linear interpolation is permitted to establish an edge distance and spacing combination between Case 1 and Case 2. Linear interpolation for a specific edge distance c, where $c_{min,1} < c < c_{min,2}$, will determine the permissible spacings.

Table 6 — Load adjustment factors for Carbon Steel 1/4-in. diameter KB-TZ2 in uncracked concrete [1,2]

1/4-in. KB-TZ2 uncracked concrete			Spacing factor in tension f_{AN}	Edge distance factor in tension f_{RN}	Spacing factor in shear [3] f_{AV}	⊥ Toward edge f_{RV}	‖ To edge f_{RV}	Concrete thickness factor in shear [4] f_{HV}
Effective Embedment h_{ef}		in.	1-1/2	1-1/2	1-1/2	1-1/2	1-1/2	1-1/2
		(mm)	(38)	(38)	(38)	(38)	(38)	(38)
Nominal Embedment h_{nom}		in.	1-3/4	1-3/4	1-3/4	1-3/4	1-3/4	1-3/4
		(mm)	(44)	(44)	(44)	(44)	(44)	(44)
Spacing (s) / Edge Distance (c_a) / Concrete Thickness (h) - in. (mm)	1-1/2	(38)	0.67	0.42	0.56	0.23	0.42	n/a
	2	(51)	0.72	0.51	0.58	0.35	0.51	n/a
	2-1/2	(64)	0.78	0.63	0.60	0.49	0.63	n/a
	3	(76)	0.83	0.75	0.63	0.65	0.75	n/a
	3-1/4	(83)	0.86	0.81	0.64	0.73	0.81	0.74
	3-1/2	(89)	0.89	0.88	0.65	0.82	0.88	0.76
	4	(102)	0.94	1.00	0.67	1.00	1.00	0.82
	5	(127)	1.00		0.71			0.91
	6	(152)			0.75			1.00
	7	(178)			0.79			
	8	(203)			0.83			
	9	(229)			0.88			
	> 12	(305)			1.00			

3.3.5

Table 7 — Load adjustment factors for Carbon Steel 1/4-in. diameter KB-TZ2 in cracked concrete [1,2]

1/4-in. KB-TZ2 cracked concrete			Spacing factor in tension f_{AN}	Edge distance factor in tension f_{RN}	Spacing factor in shear [3] f_{AV}	⊥ Toward edge f_{RV}	‖ To edge f_{RV}	Concrete thickness factor in shear [4] f_{HV}
Effective Embedment h_e		in.	1-1/2	1-1/2	1-1/2	1-1/2	1-1/2	1-1/2
		(mm)	(38)	(38)	(38)	(38)	(38)	(38)
Nominal Embedment h_{nom}		in.	1-3/4	1-3/4	1-3/4	1-3/4	1-3/4	1-3/4
		(mm)	(44)	(44)	(44)	(44)	(44)	(44)
Spacing (s) / Edge Distance (c_a) / Concrete Thickness (h) - in. (mm)	1-1/2	(38)	0.67	0.75	0.57	0.29	0.59	n/a
	2	(51)	0.72	0.91	0.60	0.45	0.91	n/a
	2-1/2	(64)	0.78	1.00	0.62	0.63	1.00	n/a
	3	(76)	0.83		0.65	0.83		n/a
	3-1/4	(83)	0.86		0.66	0.94		0.80
	3-1/2	(89)	0.89		0.67	1.00		0.83
	4	(102)	0.94		0.70			0.89
	5	(127)	1.00		0.75			0.99
	6	(152)			0.80			1.00
	7	(178)			0.84			
	8	(203)			0.89			
	9	(229)			0.94			
	> 12	(305)			1.00			

1 Linear interpolation not permitted
2 When combining multiple load adjustment factors (e.g. for a 4 anchor pattern in a corner with thin concrete member) the design can become very conservative. To optimize the design, use Hilti PROFIS Engineering Design software or perform anchor calculation using design equations from ACI 318 Ch. 17 or CSA A23.3 Annex D.
3 Spacing factor reduction in shear, f_{AV}, is applicable when edge distance $c < 3h_{ef}$. If $c \geq 3h_{ef}$ then $f_{AV} = f_{AN}$.
4 Concrete thickness reduction factor in shear, f_{HV}, is applicable when edge distance $c < 3h_{ef}$. If $c \geq 3h_{ef}$ then $f_{HV} = 1.0$.

Table 8 — Load adjustment factors for Carbon Steel 3/8-in. diameter KB-TZ2 in uncracked concrete [1,2]

3/8-in. KB-TZ2 uncracked concrete			Spacing factor in tension f_{AN}			Edge distance factor in tension f_{RN}			Spacing factor in shear [3] f_{AV}			Edge distance in shear ⊥ Toward edge f_{RV}			Edge distance in shear ∥ To edge f_{RV}			Concrete thickness factor in shear [4] f_{HV}		
Effective Embedment h_{ef}		in.	1-1/2	2	2-1/2	1-1/2	2	2-1/2	1-1/2	2	2-1/2	1-1/2	2	2-1/2	1-1/2	2	2-1/2	1-1/2	2	2-1/2
		(mm)	(38)	(51)	(64)	(38)	(51)	(64)	(38)	(51)	(64)	(38)	(51)	(64)	(38)	(51)	(64)	(38)	(51)	(64)
Nominal Embedment h_{nom}		in.	1-7/8	2-1/2	3	1-7/8	2-1/2	3	1-7/8	2-1/2	3	1-7/8	2-1/2	3	1-7/8	2-1/2	3	1-7/8	2-1/2	3
		(mm)	(48)	(64)	(76)	(48)	(64)	(76)	(48)	(64)	(76)	(48)	(64)	(76)	(48)	(64)	(76)	(48)	(64)	(76)
Spacing (s) / Edge Distance (c_a) / Concrete Thickness (h) - in. (mm)	2	(51)	n/a	n/a	0.63	n/a	n/a	n/a	n/a	n/a	0.54	n/a	n/a	n/a	n/a	n/a	n/a	n/a	n/a	n/a
	2-1/4	(57)	n/a	0.69	0.65	n/a	n/a	n/a	n/a	0.59	0.55	n/a	n/a	n/a	n/a	n/a	n/a	n/a	n/a	n/a
	2-1/2	(64)	n/a	0.71	0.67	n/a	0.60	0.51	n/a	0.60	0.55	n/a	0.43	0.18	n/a	0.60	0.37	n/a	n/a	n/a
	3	(76)	n/a	0.75	0.70	n/a	0.69	0.58	n/a	0.61	0.56	n/a	0.57	0.24	n/a	0.69	0.48	n/a	n/a	n/a
	3-1/4	(83)	n/a	0.77	0.72	n/a	0.74	0.61	n/a	0.62	0.57	n/a	0.64	0.27	n/a	0.74	0.54	0.66	n/a	n/a
	3-1/2	(89)	n/a	0.79	0.73	n/a	0.80	0.65	n/a	0.63	0.58	n/a	0.72	0.30	n/a	0.80	0.61	0.68	n/a	n/a
	4	(102)	n/a	0.83	0.77	n/a	0.91	0.73	n/a	0.65	0.59	n/a	0.87	0.37	n/a	0.91	0.73	0.73	0.78	n/a
	5	(127)	1.00	0.92	0.83	1.00	1.00	0.91	0.67	0.69	0.61	1.00	1.00	0.52	1.00	1.00	0.91	0.82	0.87	0.66
	6	(152)	1.00	1.00	0.90	1.00		1.00	0.70	0.73	0.63	1.00		0.68	1.00		1.00	0.89	0.96	0.72
	8	(203)	1.00		1.00	1.00			0.77	0.80	0.67	1.00		1.00	1.00			1.00	1.00	0.83
	12	(305)							0.90	0.96	0.76									1.00
	18	(457)							1.00	1.00	0.89									
	> 24	(610)									1.00									

Table 9 — Load adjustment factors for Carbon Steel 3/8-in. diameter KB-TZ2 in cracked concrete [1,2]

3/8-in. KB-TZ2 cracked concrete			Spacing factor in tension f_{AN}			Edge distance factor in tension f_{RN}			Spacing factor in shear [3] f_{AV}			Edge distance in shear ⊥ Toward edge f_{RV}			Edge distance in shear ∥ To edge f_{RV}			Concrete thickness factor in shear [4] f_{HV}		
Effective Embedment h_{ef}		in.	1-1/2	2	2-1/2	1-1/2	2	2-1/2	1-1/2	2	2-1/2	1-1/2	2	2-1/2	1-1/2	2	2-1/2	1-1/2	2	2-1/2
		(mm)	(38)	(51)	(64)	(38)	(51)	(64)	(38)	(51)	(64)	(38)	(51)	(64)	(38)	(51)	(64)	(38)	(51)	(64)
Nominal Embedment h_{nom}		in.	1-7/8	2-1/2	3	1-7/8	2-1/2	3	1-7/8	2-1/2	3	1-7/8	2-1/2	3	1-7/8	2-1/2	3	1-7/8	2-1/2	3
		(mm)	(48)	(64)	(76)	(48)	(64)	(76)	(48)	(64)	(76)	(48)	(64)	(76)	(48)	(64)	(76)	(48)	(64)	(76)
Spacing (s) / Edge Distance (c_a) / Concrete Thickness (h) - in. (mm)	2	(51)	n/a	n/a	0.63	n/a	n/a	n/a	n/a	n/a	0.54	n/a	n/a	n/a	n/a	n/a	n/a	n/a	n/a	n/a
	2-1/4	(57)	n/a	0.69	0.65	n/a	n/a	n/a	n/a	0.58	0.55	n/a	n/a	n/a	n/a	n/a	n/a	n/a	n/a	n/a
	2-1/2	(64)	n/a	0.71	0.67	n/a	0.87	0.75	n/a	0.59	0.55	n/a	0.40	0.18	n/a	0.80	0.37	n/a	n/a	n/a
	3	(76)	n/a	0.75	0.70	n/a	1.00	0.85	n/a	0.61	0.56	n/a	0.52	0.24	n/a	1.00	0.48	n/a	n/a	n/a
	3-1/4	(83)	n/a	0.77	0.72	n/a	1.00	0.90	n/a	0.62	0.57	n/a	0.59	0.27	n/a	1.00	0.55	0.78	n/a	n/a
	3-1/2	(89)	n/a	0.79	0.73	n/a	1.00	0.95	n/a	0.63	0.58	n/a	0.66	0.31	n/a	1.00	0.61	0.81	n/a	n/a
	4	(102)	n/a	0.83	0.77	n/a		1.00	n/a	0.64	0.59	n/a	0.81	0.37	n/a		0.75	0.86	0.76	n/a
	5	(127)	1.00	0.92	0.83	1.00			0.73	0.68	0.61	1.00	1.00	0.52	1.00		1.00	0.96	0.85	0.66
	6	(152)	1.00	1.00	0.90	1.00			0.78	0.72	0.63	1.00		0.69	1.00			1.00	0.93	0.72
	8	(203)	1.00		1.00	1.00			0.87	0.79	0.67	1.00		1.00	1.00				1.00	0.83
	12	(305)							1.00	0.93	0.76									1.00
	18	(457)								1.00	0.89									
	> 24	(610)									1.00									

1 Linear interpolation not permitted
2 When combining multiple load adjustment factors (e.g. for a 4 anchor pattern in a corner with thin concrete member) the design can become very conservative. To optimize the design, use Hilti PROFIS Engineering Design software or perform anchor calculation using design equations from ACI 318 Ch. 17 or CSA A23.3 Annex D.
3 Spacing factor reduction in shear, f_{AV}, is applicable when edge distance $c < 3h_{ef}$. If $c \geq 3h_{ef}$ then $f_{AV} = f_{AN}$.
4 Concrete thickness reduction factor in shear, f_{HV}, is applicable when edge distance $c < 3h_{ef}$. If $c \geq 3h_{ef}$ then $f_{HV} = 1.0$.

If a reduction factor value is in a shaded cell, this indicates that this specific edge distance may not be permitted with a certain spacing (or vice versa). Check with Figure 2 and Table 5 to calculate permissible edge distance, spacing and concrete thickness combinations.

Table 10 — Load adjustment factors for Carbon Steel 1/2-in. diameter KB-TZ2 in uncracked concrete [1,2]

1/2-in. KB-TZ2 uncracked concrete		Spacing factor in tension f_{AN}				Edge distance factor in tension f_{RN}				Spacing factor in shear [3] f_{AV}				Edge distance in shear ⊥ Toward edge f_{RV}				Edge distance in shear ‖ To edge f_{RV}				Concrete thickness factor in shear [4] f_{HV}			
Effective Embedment h_{ef}	in.	1-1/2	2	2-1/2	3-1/4	1-1/2	2	2-1/2	3-1/4	1-1/2	2	2-1/2	3-1/4	1-1/2	2	2-1/2	3-1/4	1-1/2	2	2-1/2	3-1/4	1-1/2	2	2-1/2	3-1/4
	(mm)	(38)	(51)	(64)	(83)	(38)	(51)	(64)	(83)	(38)	(51)	(64)	(83)	(38)	(51)	(64)	(83)	(38)	(51)	(64)	(83)	(38)	(51)	(64)	(83)
Nominal Embedment h_{nom}	in.	2	2-1/2	3	3-3/4	2	2-1/2	3	3-3/4	2	2-1/2	3	3-3/4	2	2-1/2	3	3-3/4	2	2-1/2	3	3-3/4	2	2-1/2	3	3-3/4
	(mm)	(51)	(64)	(76)	(95)	(51)	(64)	(76)	(95)	(51)	(64)	(76)	(95)	(51)	(64)	(76)	(95)	(51)	(64)	(76)	(95)	(51)	(64)	(76)	(95)
Spacing (s) / Edge Distance (c_a) / Concrete Thickness (h) - in. (mm)																									
2	(51)	n/a	n/a	n/a	0.60	n/a	n/a	n/a	n/a	n/a	n/a	n/a	0.53	n/a	n/a	n/a	n/a	n/a	n/a	n/a	n/a	n/a	n/a	n/a	n/a
2-1/4	(57)	n/a	n/a	n/a	0.62	n/a	n/a	n/a	0.30	n/a	n/a	n/a	0.54	n/a	n/a	n/a	0.11	n/a	n/a	n/a	0.21	n/a	n/a	n/a	n/a
2-3/4	(70)	n/a	n/a	n/a	0.64	n/a	0.51	0.44	0.33	n/a	n/a	n/a	0.55	n/a	0.35	0.23	0.14	n/a	0.51	0.44	0.29	n/a	n/a	n/a	n/a
3	(76)	n/a	n/a	0.70	0.65	n/a	0.55	0.47	0.35	n/a	n/a	0.57	0.55	n/a	0.40	0.26	0.16	n/a	0.55	0.47	0.33	n/a	n/a	n/a	n/a
3-1/4	(83)	n/a	n/a	0.72	0.67	n/a	0.59	0.50	0.37	n/a	n/a	0.57	0.55	n/a	0.45	0.30	0.19	n/a	0.59	0.50	0.37	0.52	n/a	n/a	n/a
3-1/2	(89)	n/a	0.79	0.73	0.68	n/a	0.64	0.53	0.38	n/a	0.61	0.58	0.56	n/a	0.51	0.33	0.21	n/a	0.64	0.53	0.38	0.54	n/a	n/a	n/a
4	(102)	n/a	0.83	0.77	0.71	n/a	0.73	0.59	0.42	n/a	0.62	0.59	0.57	n/a	0.62	0.40	0.25	n/a	0.73	0.59	0.42	0.58	0.70	n/a	n/a
4-3/4	(121)	n/a	0.90	0.82	0.74	n/a	0.86	0.70	0.48	n/a	0.64	0.61	0.58	n/a	0.80	0.52	0.33	n/a	0.86	0.70	0.48	0.63	0.76	n/a	n/a
5	(127)	n/a	0.92	0.83	0.76	n/a	0.91	0.74	0.50	n/a	0.65	0.61	0.58	n/a	0.87	0.56	0.35	n/a	0.91	0.74	0.50	0.65	0.78	0.67	n/a
5-1/4	(133)	n/a	0.94	0.85	0.77	n/a	0.95	0.78	0.53	n/a	0.66	0.62	0.59	n/a	0.93	0.61	0.38	n/a	0.95	0.78	0.53	0.66	0.80	0.69	n/a
5-1/2	(140)	n/a	0.96	0.87	0.78	n/a	1.00	0.81	0.55	n/a	0.67	0.63	0.59	n/a	1.00	0.65	0.41	n/a	1.00	0.81	0.55	0.68	0.82	0.71	0.61
6	(152)	n/a	1.00	0.90	0.81	n/a	1.00	0.89	0.60	n/a	0.68	0.64	0.60	n/a	1.00	0.74	0.46	n/a	1.00	0.89	0.60	0.71	0.85	0.74	0.63
8	(203)	n/a		1.00	0.91	1.00	1.00	1.00	0.80	n/a	0.74	0.68	0.63	1.00	1.00	1.00	0.72	1.00	1.00	1.00	0.80	0.82	0.98	0.85	0.73
9-3/4	(248)	n/a		1.00	1.00		1.00		0.98	n/a	0.80	0.72	0.66		1.00		0.96		1.00		0.98	0.90	1.00	0.94	0.81
10	(254)	n/a					1.00		1.00	n/a	0.80	0.73	0.67		1.00		1.00		1.00		1.00	0.91		0.95	0.82
12	(305)	1.00								0.75	0.86	0.77	0.70									1.00		1.00	0.89
24	(610)									1.00	1.00	1.00	0.90												1.00
> 30	(762)												1.00												

3.3.5

Table 11 — Load adjustment factors for Carbon Steel 1/2-in. diameter KB-TZ2 in cracked concrete [1,2]

1/2-in. KB-TZ2 cracked concrete		Spacing factor in tension f_{AN}				Edge distance factor in tension f_{RN}				Spacing factor in shear [3] f_{AV}				Edge distance in shear ⊥ Toward edge f_{RV}				Edge distance in shear ‖ To edge f_{RV}				Concrete thickness factor in shear [4] f_{HV}			
Effective Embedment h_{ef}	in.	1-1/2	2	2-1/2	3-1/4	1-1/2	2	2-1/2	3-1/4	1-1/2	2	2-1/2	3-1/4	1-1/2	2	2-1/2	3-1/4	1-1/2	2	2-1/2	3-1/4	1-1/2	2	2-1/2	3-1/4
	(mm)	(38)	(51)	(64)	(83)	(38)	(51)	(64)	(83)	(38)	(51)	(64)	(83)	(38)	(51)	(64)	(83)	(38)	(51)	(64)	(83)	(38)	(51)	(64)	(83)
Nominal Embedment h_{nom}	in.	2	2-1/2	3	3-3/4	2	2-1/2	3	3-3/4	2	2-1/2	3	3-3/4	2	2-1/2	3	3-3/4	2	2-1/2	3	3-3/4	2	2-1/2	3	3-3/4
	(mm)	(51)	(64)	(76)	(95)	(51)	(64)	(76)	(95)	(51)	(64)	(76)	(95)	(51)	(64)	(76)	(95)	(51)	(64)	(76)	(95)	(51)	(64)	(76)	(95)
Spacing (s) / Edge Distance (c_a) / Concrete Thickness (h) - in. (mm)																									
2	(51)	n/a	n/a	n/a	0.60	n/a	n/a	n/a	n/a	n/a	n/a	n/a	0.54	n/a	n/a	n/a	n/a	n/a	n/a	n/a	n/a	n/a	n/a	n/a	n/a
2-1/4	(57)	n/a	n/a	n/a	0.62	n/a	n/a	n/a	0.61	n/a	n/a	n/a	0.54	n/a	n/a	n/a	0.12	n/a	n/a	n/a	0.24	n/a	n/a	n/a	n/a
2-3/4	(70)	n/a	n/a	n/a	0.64	n/a	0.93	0.80	0.68	n/a	n/a	n/a	0.55	n/a	0.50	0.19	0.16	n/a	0.93	0.38	0.33	n/a	n/a	n/a	n/a
3	(76)	n/a	n/a	0.70	0.65	n/a	1.00	0.85	0.71	n/a	n/a	0.56	0.55	n/a	0.57	0.21	0.19	n/a	1.00	0.43	0.38	n/a	n/a	n/a	n/a
3-1/4	(83)	n/a	n/a	0.72	0.67	n/a	1.00	0.90	0.75	n/a	n/a	0.56	0.56	n/a	0.64	0.24	0.21	n/a	1.00	0.48	0.42	0.76	n/a	n/a	n/a
3-1/2	(89)	n/a	0.79	0.73	0.68	n/a	1.00	0.95	0.79	n/a	0.63	0.57	0.56	n/a	0.72	0.27	0.24	n/a	1.00	0.54	0.47	0.79	n/a	n/a	n/a
4	(102)	n/a	0.83	0.77	0.71	n/a	1.00	1.00	0.86	n/a	0.65	0.58	0.57	n/a	0.88	0.33	0.29	n/a	1.00	0.66	0.58	0.85	0.78	n/a	n/a
4-3/4	(121)	n/a	0.90	0.82	0.74	n/a	1.00	1.00	0.98	n/a	0.68	0.59	0.59	n/a	1.00	0.43	0.37	n/a	1.00	0.85	0.75	0.92	0.85	n/a	n/a
5	(127)	n/a	0.92	0.83	0.76	n/a	1.00	1.00	1.00	n/a	0.69	0.60	0.59	n/a	1.00	0.46	0.40	n/a	1.00	0.92	0.81	0.95	0.87	0.63	n/a
5-1/4	(133)	n/a	0.94	0.85	0.77	n/a	1.00	1.00		n/a	0.70	0.60	0.60	n/a	1.00	0.49	0.43	n/a	1.00	0.99	0.87	0.97	0.90	0.65	n/a
5-1/2	(140)	n/a	0.96	0.87	0.78	n/a	1.00	1.00		n/a	0.71	0.61	0.60	n/a	1.00	0.53	0.47	n/a	1.00	1.00	0.93	0.99	0.92	0.66	0.63
6	(152)	n/a	1.00	0.90	0.81	n/a	1.00	1.00		n/a	0.73	0.62	0.61	n/a	1.00	0.60	0.53	n/a	1.00	1.00	1.00	1.00	0.96	0.69	0.66
8	(203)	n/a		1.00	0.91	1.00	1.00	1.00		n/a	0.81	0.66	0.65	1.00	1.00	0.93	0.82	1.00	1.00	1.00			1.00	0.80	0.76
9-3/4	(248)	n/a		1.00	1.00		1.00			n/a	0.87	0.69	0.68		1.00	1.00	1.00		1.00					0.88	0.84
10	(254)	n/a					1.00			n/a	0.88	0.70	0.68		1.00				1.00					0.89	0.85
12	(305)	1.00								1.00	0.96	0.74	0.72											0.98	0.94
24	(610)										1.00	0.98	0.94											1.00	1.00
> 30	(762)											1.00	1.00												

1 Linear interpolation not permitted
2 When combining multiple load adjustment factors (e.g. for a 4 anchor pattern in a corner with thin concrete member) the design can become very conservative. To optimize the design, use Hilti PROFIS Engineering Design software or perform anchor calculation using design equations from ACI 318 Ch. 17 or CSA A23.3 Annex D.
3 Spacing factor reduction in shear, f_{AV}, is applicable when edge distance $c < 3h_{ef}$. If $c \geq 3h_{ef}$ then $f_{AV} = f_{AN}$.
4 Concrete thickness reduction factor in shear, f_{HV}, is applicable when edge distance $c < 3h_{ef}$. If $c \geq 3h_{ef}$ then $f_{HV} = 1.0$.

If a reduction factor value is in a shaded cell, this indicates that this specific edge distance may not be permitted with a certain spacing (or vice versa). Check with Figure 2 and Table 5 to calculate permissible edge distance, spacing and concrete thickness combinations.

Table 12 — Load adjustment factors for Carbon Steel 5/8-in. diameter KB-TZ2 in uncracked concrete [1,2]

5/8-in. KB-TZ2 uncracked concrete		Spacing factor in tension f_{AN}			Edge distance factor in tension f_{RN}			Spacing factor in shear [3] f_{AV}			Edge distance in shear ⊥ Toward edge f_{RV}			Edge distance in shear ∥ To edge f_{RV}			Concrete thickness factor in shear [4] f_{HV}		
Effective Embedment h_{ef}	in.	2-3/4	3-1/4	4	2-3/4	3-1/4	4	2-3/4	3-1/4	4	2-3/4	3-1/4	4	2-3/4	3-1/4	4	2-3/4	3-1/4	4
	(mm)	(70)	(83)	(102)	(70)	(83)	(102)	(70)	(83)	(102)	(70)	(83)	(102)	(70)	(83)	(102)	(70)	(83)	(102)
Nominal Embedment h_{nom}	in.	3-1/4	3-3/4	4-1/2	3-1/4	3-3/4	4-1/2	3-1/4	3-3/4	4-1/2	3-1/4	3-3/4	4-1/2	3-1/4	3-3/4	4-1/2	3-1/4	3-3/4	4-1/2
	(mm)	(83)	(95)	(114)	(83)	(95)	(114)	(83)	(95)	(114)	(83)	(95)	(114)	(83)	(95)	(114)	(83)	(95)	(114)
Spacing (s) / Edge Distance (c_a) / Concrete Thickness (h) - in. (mm)																			
2-1/4	(57)	n/a	0.62	n/a	n/a	n/a	0.38	n/a	0.53	n/a	n/a	n/a	0.10	n/a	n/a	0.20	n/a	n/a	n/a
2-3/4	(70)	n/a	0.64	0.61	n/a	n/a	0.42	n/a	0.54	0.54	n/a	n/a	0.13	n/a	n/a	0.27	n/a	n/a	n/a
3	(76)	n/a	0.65	0.63	n/a	0.30	0.44	n/a	0.54	0.55	n/a	0.13	0.15	n/a	0.27	0.30	n/a	n/a	n/a
3-1/2	(89)	n/a	0.68	0.65	n/a	0.33	0.48	n/a	0.55	0.56	n/a	0.17	0.19	n/a	0.33	0.38	n/a	n/a	n/a
4	(102)	0.74	0.71	0.67	0.40	0.37	0.51	0.57	0.56	0.56	0.25	0.21	0.23	0.40	0.37	0.47	n/a	n/a	n/a
4-1/2	(114)	0.77	0.73	0.69	0.45	0.40	0.56	0.58	0.57	0.57	0.30	0.24	0.28	0.45	0.40	0.56	n/a	n/a	n/a
5	(127)	0.80	0.76	0.71	0.50	0.43	0.60	0.58	0.57	0.58	0.35	0.29	0.33	0.50	0.43	0.60	0.58	n/a	n/a
5-1/2	(140)	0.83	0.78	0.73	0.55	0.48	0.64	0.59	0.58	0.59	0.41	0.33	0.38	0.55	0.48	0.64	0.61	0.56	n/a
6	(152)	0.86	0.81	0.75	0.60	0.52	0.69	0.60	0.59	0.59	0.46	0.38	0.43	0.60	0.52	0.69	0.63	0.59	0.62
6-1/2	(165)	0.89	0.83	0.77	0.65	0.57	0.74	0.61	0.59	0.60	0.52	0.42	0.48	0.65	0.57	0.74	0.66	0.61	0.64
7	(178)	0.92	0.86	0.79	0.70	0.61	0.80	0.62	0.60	0.61	0.59	0.47	0.54	0.70	0.61	0.80	0.68	0.64	0.67
7-1/4	(184)	0.94	0.87	0.80	0.73	0.63	0.83	0.62	0.61	0.61	0.62	0.50	0.57	0.73	0.63	0.83	0.70	0.65	0.68
12	(305)	1.00	1.00	1.00	1.00	1.00	1.00	0.70	0.67	0.69	1.00	1.00	1.00	1.00	1.00	1.00	0.89	0.83	0.87
24	(610)							0.90	0.85	0.88							1.00	1.00	1.00
> 36	(914)							1.00	1.00	1.00									

Table 13 — Load adjustment factors for Carbon Steel 5/8-in. diameter KB-TZ2 in cracked concrete [1,2]

5/8-in. KB-TZ2 cracked concrete		Spacing factor in tension f_{AN}			Edge distance factor in tension f_{RN}			Spacing factor in shear [3] f_{AV}			Edge distance in shear ⊥ Toward edge f_{RV}			Edge distance in shear ∥ To edge f_{RV}			Concrete thickness factor in shear [4] f_{HV}		
Effective Embedment h_{ef}	in.	2-3/4	3-1/4	4	2-3/4	3-1/4	4	2-3/4	3-1/4	4	2-3/4	3-1/4	4	2-3/4	3-1/4	4	2-3/4	3-1/4	4
	(mm)	(70)	(83)	(102)	(70)	(83)	(102)	(70)	(83)	(102)	(70)	(83)	(102)	(70)	(83)	(102)	(70)	(83)	(102)
Nominal Embedment h_{nom}	in.	3-1/4	3-3/4	4-1/2	3-1/4	3-3/4	4-1/2	3-1/4	3-3/4	4-1/2	3-1/4	3-3/4	4-1/2	3-1/4	3-3/4	4-1/2	3-1/4	3-3/4	4-1/2
	(mm)	(83)	(95)	(114)	(83)	(95)	(114)	(83)	(95)	(114)	(83)	(95)	(114)	(83)	(95)	(114)	(83)	(95)	(114)
Spacing (s) / Edge Distance (c_a) / Concrete Thickness (h) - in. (mm)																			
2-1/4	(57)	n/a	0.62	n/a	n/a	n/a	0.56	n/a	0.54	n/a	n/a	n/a	0.10	n/a	n/a	0.20	n/a	n/a	n/a
2-3/4	(70)	n/a	0.64	0.61	n/a	n/a	0.61	n/a	0.55	0.54	n/a	n/a	0.13	n/a	n/a	0.27	n/a	n/a	n/a
3	(76)	n/a	0.65	0.63	n/a	0.71	0.64	n/a	0.55	0.55	n/a	0.16	0.15	n/a	0.32	0.31	n/a	n/a	n/a
3-1/2	(89)	n/a	0.68	0.65	n/a	0.79	0.69	n/a	0.56	0.56	n/a	0.20	0.19	n/a	0.41	0.39	n/a	n/a	n/a
4	(102)	0.74	0.71	0.67	0.98	0.86	0.75	0.58	0.57	0.56	0.31	0.25	0.24	0.62	0.50	0.47	n/a	n/a	n/a
4-1/2	(114)	0.77	0.73	0.69	1.00	0.94	0.81	0.59	0.57	0.57	0.37	0.30	0.28	0.74	0.60	0.56	n/a	n/a	n/a
5	(127)	0.80	0.76	0.71	1.00	1.00	0.87	0.60	0.58	0.58	0.43	0.35	0.33	0.87	0.70	0.66	0.62	n/a	n/a
5-1/2	(140)	0.83	0.78	0.73	1.00	1.00	0.93	0.61	0.59	0.59	0.50	0.40	0.38	1.00	0.81	0.76	0.65	0.60	n/a
6	(152)	0.86	0.81	0.75		1.00	1.00	0.61	0.60	0.60	0.57	0.46	0.43		0.92	0.87	0.68	0.63	0.62
6-1/2	(165)	0.89	0.83	0.77		1.00		0.62	0.61	0.60	0.64	0.52	0.49		1.00	0.98	0.71	0.66	0.64
7	(178)	0.92	0.86	0.79		1.00		0.63	0.62	0.61	0.72	0.58	0.55		1.00	1.00	0.73	0.68	0.67
7-1/4	(184)	0.94	0.87	0.80				0.64	0.62	0.62	0.76	0.61	0.58				0.74	0.69	0.68
12	(305)	1.00	1.00	1.00				0.73	0.70	0.69	1.00	1.00	1.00				0.96	0.89	0.87
24	(610)							0.96	0.90	0.88							1.00	1.00	1.00
> 36	(914)							1.00	1.00	1.00									

1 Linear interpolation not permitted
2 When combining multiple load adjustment factors (e.g. for a 4 anchor pattern in a corner with thin concrete member) the design can become very conservative. To optimize the design, use Hilti PROFIS Engineering Design software or perform anchor calculation using design equations from ACI 318 Ch. 17 or CSA A23.3 Annex D.
3 Spacing factor reduction in shear, f_{AV}, is applicable when edge distance $c < 3h_{ef}$. If $c \geq 3h_{ef}$ then $f_{AV} = f_{AN}$.
4 Concrete thickness reduction factor in shear, f_{HV}, is applicable when edge distance $c < 3h_{ef}$. If $c \geq 3h_{ef}$ then $f_{HV} = 1.0$.

If a reduction factor value is in a shaded cell, this indicates that this specific edge distance may not be permitted with a certain spacing (or vice versa). Check with Figure 2 and Table 5 to calculate permissible edge distance, spacing and concrete thickness combinations.

Table 14 — Load adjustment factors for Carbon Steel 3/4-in. diameter KB-TZ2 in uncracked concrete [1,2]

3/4-in. KB-TZ2 uncracked concrete		Spacing factor in tension f_{AN}			Edge distance factor in tension f_{RN}			Spacing factor in shear [3] f_{AV}			Edge distance in shear ⊥ Toward edge f_{RV}			Edge distance in shear ‖ To edge f_{RV}			Concrete thickness factor in shear [4] f_{HV}		
Effective Embedment h_{ef}	in.	3-1/4	3-3/4	4-3/4	3-1/4	3-3/4	4-3/4	3-1/4	3-3/4	4-3/4	3-1/4	3-3/4	4-3/4	3-1/4	3-3/4	4-3/4	3-1/4	3-3/4	4-3/4
	(mm)	(83)	(95)	(121)	(83)	(95)	(121)	(83)	(95)	(121)	(83)	(95)	(121)	(83)	(95)	(121)	(83)	(95)	(121)
Nominal Embedment h_{nom}	in.	4	4-1/2	5-1/2	4	4-1/2	5-1/2	4	4-1/2	5-1/2	4	4-1/2	5-1/2	4	4-1/2	5-1/2	4	4-1/2	5-1/2
	(mm)	(102)	(114)	(140)	(102)	(114)	(140)	(102)	(114)	(140)	(102)	(114)	(140)	(102)	(114)	(140)	(102)	(114)	(140)
Spacing (s) / Edge Distance (c_a) / Concrete Thickness (h) - in. (mm)																			
3-1/2	(89)	n/a	n/a	n/a	n/a	n/a	0.50	n/a	n/a	n/a	n/a	n/a	0.16	n/a	n/a	0.32	n/a	n/a	n/a
3-3/4	(95)	n/a	0.67	0.63	n/a	n/a	0.52	n/a	0.56	0.55	n/a	n/a	0.18	n/a	n/a	0.36	n/a	n/a	n/a
4	(102)	n/a	0.68	0.64	n/a	0.44	0.54	n/a	0.56	0.56	n/a	0.24	0.20	n/a	0.44	0.40	n/a	n/a	n/a
4-1/2	(114)	0.73	0.70	0.66	n/a	0.48	0.57	0.56	0.57	0.56	n/a	0.29	0.24	n/a	0.48	0.47	n/a	n/a	n/a
4-3/4	(121)	0.74	0.71	0.67	n/a	0.49	0.59	0.57	0.58	0.57	n/a	0.31	0.26	n/a	0.49	0.51	n/a	n/a	n/a
5	(127)	0.76	0.72	0.68	0.42	0.51	0.61	0.57	0.58	0.57	0.27	0.33	0.28	0.42	0.51	0.55	n/a	n/a	n/a
5-1/2	(140)	0.78	0.74	0.69	0.46	0.55	0.65	0.58	0.59	0.58	0.31	0.39	0.32	0.46	0.55	0.64	0.55	n/a	n/a
5-3/4	(146)	0.79	0.76	0.70	0.48	0.58	0.67	0.58	0.59	0.58	0.33	0.41	0.34	0.48	0.58	0.67	0.57	n/a	n/a
6	(152)	0.81	0.77	0.71	0.50	0.60	0.69	0.58	0.60	0.58	0.35	0.44	0.36	0.50	0.60	0.69	0.58	0.62	n/a
7	(178)	0.86	0.81	0.75	0.58	0.70	0.78	0.60	0.61	0.60	0.45	0.55	0.46	0.58	0.70	0.78	0.62	0.67	n/a
7-1/4	(184)	0.87	0.82	0.75	0.60	0.73	0.81	0.60	0.62	0.60	0.47	0.58	0.48	0.60	0.73	0.81	0.63	0.68	n/a
8	(203)	0.91	0.86	0.78	0.67	0.80	0.89	0.61	0.63	0.61	0.54	0.68	0.56	0.67	0.80	0.89	0.67	0.72	0.67
9	(229)	0.96	0.90	0.82	0.75	0.90	1.00	0.63	0.64	0.63	0.65	0.81	0.67	0.75	0.90	1.00	0.71	0.76	0.71
10	(254)	1.00	0.94	0.85	0.83	1.00		0.64	0.66	0.64	0.76	0.94	0.78	0.83	1.00		0.75	0.80	0.75
11	(279)		0.99	0.89	0.92			0.65	0.68	0.66	0.88	1.00	0.90	0.92			0.78	0.84	0.79
12	(305)		1.00	0.92	1.00			0.67	0.69	0.67	1.00		1.00	1.00			0.82	0.88	0.82
16	(406)			1.00				0.72	0.76	0.73							0.94	1.00	0.95
18	(457)							0.75	0.79	0.75							1.00		1.00
24	(610)							0.83	0.89	0.84									
> 36	(914)							1.00	1.00	1.00									

3.3.5

Table 15 — Load adjustment factors for Carbon Steel 3/4-in. diameter KB-TZ2 in cracked concrete [1,2]

3/4-in. KB-TZ2 cracked concrete		Spacing factor in tension f_{AN}			Edge distance factor in tension f_{RN}			Spacing factor in shear [3] f_{AV}			Edge distance in shear ⊥ Toward edge f_{RV}			Edge distance in shear ‖ To edge f_{RV}			Concrete thickness factor in shear [4] f_{HV}		
Effective Embedment h_{ef}	in.	3-1/4	3-3/4	4-3/4	3-1/4	3-3/4	4-3/4	3-1/4	3-3/4	4-3/4	3-1/4	3-3/4	4-3/4	3-1/4	3-3/4	4-3/4	3-1/4	3-3/4	4-3/4
	(mm)	(83)	(95)	(121)	(83)	(95)	(121)	(83)	(95)	(121)	(83)	(95)	(121)	(83)	(95)	(121)	(83)	(95)	(121)
Nominal Embedment h_{nom}	in.	4	4-1/2	5-1/2	4	4-1/2	5-1/2	4	4-1/2	5-1/2	4	4-1/2	5-1/2	4	4-1/2	5-1/2	4	4-1/2	5-1/2
	(mm)	(102)	(114)	(140)	(102)	(114)	(140)	(102)	(114)	(140)	(102)	(114)	(140)	(102)	(114)	(140)	(102)	(114)	(140)
Spacing (s) / Edge Distance (c_a) / Concrete Thickness (h) - in. (mm)																			
3-1/2	(89)	n/a	n/a	n/a	n/a	n/a	0.63	n/a	n/a	n/a	n/a	n/a	0.13	n/a	n/a	0.26	n/a	n/a	n/a
3-3/4	(95)	n/a	0.67	0.63	n/a	n/a	0.65	n/a	0.56	0.55	n/a	n/a	0.15	n/a	n/a	0.29	n/a	n/a	n/a
4	(102)	n/a	0.68	0.64	n/a	0.78	0.68	n/a	0.56	0.55	n/a	0.22	0.16	n/a	0.44	0.32	n/a	n/a	n/a
4-1/2	(114)	0.73	0.70	0.66	n/a	0.85	0.73	0.58	0.57	0.56	n/a	0.26	0.19	n/a	0.52	0.39	n/a	n/a	n/a
4-3/4	(121)	0.74	0.71	0.67	n/a	0.88	0.75	0.58	0.57	0.56	n/a	0.28	0.21	n/a	0.57	0.42	n/a	n/a	n/a
5	(127)	0.76	0.72	0.68	1.00	0.91	0.77	0.59	0.58	0.56	0.37	0.31	0.23	0.74	0.61	0.45	n/a	n/a	n/a
5-1/2	(140)	0.78	0.74	0.69	1.00	0.98	0.83	0.59	0.58	0.57	0.43	0.35	0.26	0.85	0.71	0.52	0.61	n/a	n/a
5-3/4	(146)	0.79	0.76	0.70	1.00	1.00	0.85	0.60	0.59	0.57	0.46	0.38	0.28	0.91	0.76	0.56	0.63	n/a	n/a
6	(152)	0.81	0.77	0.71	1.00	1.00	0.88	0.60	0.59	0.57	0.49	0.40	0.30	0.97	0.81	0.59	0.64	0.60	n/a
7	(178)	0.86	0.81	0.75		1.00	0.99	0.62	0.61	0.59	0.61	0.51	0.37	1.00	1.00	0.75	0.69	0.65	n/a
7-1/4	(184)	0.87	0.82	0.75			1.00	0.62	0.61	0.59	0.64	0.54	0.39	1.00	1.00	0.79	0.71	0.66	n/a
8	(203)	0.91	0.86	0.78				0.64	0.62	0.60	0.75	0.62	0.46			0.91	0.74	0.70	0.63
9	(229)	0.96	0.90	0.82				0.65	0.64	0.61	0.89	0.74	0.54			1.00	0.79	0.74	0.67
10	(254)	1.00	0.94	0.85				0.67	0.65	0.62	1.00	0.87	0.64				0.83	0.78	0.70
11	(279)		0.99	0.89				0.69	0.67	0.64		1.00	0.74				0.87	0.82	0.74
12	(305)		1.00	0.92				0.71	0.68	0.65			0.84				0.91	0.85	0.77
16	(406)			1.00				0.77	0.74	0.70			1.00				1.00	0.98	0.89
18	(457)							0.81	0.77	0.72								1.00	0.94
24	(610)							0.91	0.86	0.80									1.00
> 36	(914)							1.00	1.00	0.94									

1 Linear interpolation not permitted
2 When combining multiple load adjustment factors (e.g. for a 4 anchor pattern in a corner with thin concrete member) the design can become very conservative. To optimize the design, use Hilti PROFIS Engineering Design software or perform anchor calculation using design equations from ACI 318 Ch. 17 or CSA A23.3 Annex D.
3 Spacing factor reduction in shear, f_{AV}, is applicable when edge distance $c < 3h_{ef}$. If $c \geq 3h_{ef}$ then $f_{AV} = f_{AN}$.
4 Concrete thickness reduction factor in shear, f_{HV}, is applicable when edge distance $c < 3h_{ef}$. If $c \geq 3h_{ef}$ then $f_{HV} = 1.0$.

If a reduction factor value is in a shaded cell, this indicates that this specific edge distance may not be permitted with a certain spacing (or vice versa). Check with Figure 2 and Table 5 to calculate permissible edge distance, spacing and concrete thickness combinations.

Table 16 — Load adjustment factors for Carbon Steel 1-in. diameter KB-TZ2 in uncracked concrete [1,2]

1-in. KB-TZ2 uncracked concrete			Spacing factor in tension f_{AN}		Edge distance factor in tension f_{RN}		Spacing factor in shear [3] f_{AV}		Edge distance in shear ⊥ Toward edge f_{RV}		Edge distance in shear ∥ To edge f_{RV}		Concrete thickness factor in shear [4] f_{HV}	
Effective Embedment h_{ef}		in.	4	5-3/4	4	5-3/4	4	5-3/4	4	5-3/4	4	5-3/4	4	5-3/4
		(mm)	(102)	(146)	(102)	(146)	(102)	(146)	(102)	(146)	(102)	(146)	(102)	(146)
Nominal Embedment h_{nom}		in.	4-5/8	6-3/8	4-5/8	6-3/8	4-5/8	6-3/8	4-5/8	6-3/8	4-5/8	6-3/8	4-5/8	6-3/8
		(mm)	(117)	(162)	(117)	(162)	(117)	(162)	(117)	(162)	(117)	(162)	(117)	(162)
Spacing (s) / Edge Distance (c_a) / Concrete Thickness (h) - in. (mm)	3	(76)	n/a	n/a	n/a	0.292	n/a	n/a	n/a	0.081	n/a	0.162	n/a	n/a
	3-3/4	(95)	n/a	n/a	n/a	0.321	n/a	n/a	n/a	0.113	n/a	0.227	n/a	n/a
	4	(102)	n/a	n/a	n/a	0.331	n/a	n/a	n/a	0.125	n/a	0.250	n/a	n/a
	4-1/4	(108)	n/a	n/a	n/a	0.341	n/a	n/a	n/a	0.137	n/a	0.274	n/a	n/a
	4-3/4	(121)	n/a	0.638	n/a	0.362	n/a	0.549	n/a	0.162	n/a	0.324	n/a	n/a
	5	(127)	n/a	0.645	n/a	0.372	n/a	0.552	n/a	0.175	n/a	0.349	n/a	n/a
	6	(152)	n/a	0.674	n/a	0.415	n/a	0.563	n/a	0.230	n/a	0.415	n/a	n/a
	6-3/4	(171)	n/a	0.696	n/a	0.449	n/a	0.570	n/a	0.274	n/a	0.449	n/a	n/a
	8	(203)	0.833	0.732	0.727	0.508	0.621	0.583	0.620	0.354	0.727	0.508	0.696	n/a
	10	(254)	0.917	0.790	0.909	0.625	0.652	0.604	0.867	0.494	0.909	0.625	0.778	0.645
	12	(305)	1.000	0.848	1.000	0.750	0.682	0.625	1.000	0.650	1.000	0.750	0.853	0.707
	18	(457)		1.000		1.000	0.773	0.688		1.000		1.000	1.000	0.866
	24	(610)					0.864	0.750						1.000
	36	(914)					1.000	0.875						
	> 48	(1219)						1.000						

Table 17 — Load adjustment factors for Carbon Steel 1-in. diameter KB-TZ2 in cracked concrete [1,2]

1-in. KB-TZ2 cracked concrete			Spacing factor in tension f_{AN}		Edge distance factor in tension f_{RN}		Spacing factor in shear [3] f_{AV}		Edge distance in shear ⊥ Toward edge f_{RV}		Edge distance in shear ∥ To edge f_{RV}		Concrete thickness factor in shear [4] f_{HV}	
Effective Embedment h_{ef}		in.	4	5-3/4	4	5-3/4	4	5-3/4	4	5-3/4	4	5-3/4	4	5-3/4
		(mm)	(102)	(146)	(102)	(146)	(102)	(146)	(102)	(146)	(102)	(146)	(102)	(146)
Nominal Embedment h_{nom}		in.	4-5/8	6-3/8	4-5/8	6-3/8	4-5/8	6-3/8	4-5/8	6-3/8	4-5/8	6-3/8	4-5/8	6-3/8
		(mm)	(117)	(162)	(117)	(162)	(117)	(162)	(117)	(162)	(117)	(162)	(117)	(162)
Spacing (s) / Edge Distance (c_a) / Concrete Thickness (h) - in. (mm)	3	(76)	n/a	n/a	n/a	0.542	n/a	n/a	n/a	0.081	n/a	0.162	n/a	n/a
	3-3/4	(95)	n/a	n/a	n/a	0.596	n/a	n/a	n/a	0.113	n/a	0.226	n/a	n/a
	4	(102)	n/a	n/a	n/a	0.614	n/a	n/a	n/a	0.124	n/a	0.249	n/a	n/a
	4-1/4	(108)	n/a	n/a	n/a	0.633	n/a	n/a	n/a	0.136	n/a	0.272	n/a	n/a
	4-3/4	(121)	n/a	0.638	n/a	0.671	n/a	0.549	n/a	0.161	n/a	0.322	n/a	n/a
	5	(127)	n/a	0.645	n/a	0.690	n/a	0.552	n/a	0.174	n/a	0.348	n/a	n/a
	6	(152)	n/a	0.674	n/a	0.770	n/a	0.562	n/a	0.228	n/a	0.457	n/a	n/a
	6-3/4	(171)	n/a	0.696	n/a	0.833	n/a	0.570	n/a	0.273	n/a	0.545	n/a	n/a
	8	(203)	0.833	0.732	1.000	0.943	0.619	0.583	0.606	0.352	1.000	0.703	0.691	n/a
	10	(254)	0.917	0.790		1.000	0.649	0.604	0.847	0.491		0.983	0.773	0.644
	12	(305)	1.000	0.848			0.679	0.625	1.000	0.646		1.000	0.846	0.706
	18	(457)		1.000			0.769	0.687		1.000			1.000	0.864
	24	(610)					0.858	0.749						0.998
	36	(914)					1.000	0.874						1.000
	> 48	(1219)						0.998						

1 Linear interpolation not permitted
2 When combining multiple load adjustment factors (e.g. for a 4 anchor pattern in a corner with thin concrete member) the design can become very conservative. To optimize the design, use Hilti PROFIS Engineering Design software or perform anchor calculation using design equations from ACI 318 Ch. 17 or CSA A23.3 Annex D.
3 Spacing factor reduction in shear, f_{AV}, is applicable when edge distance $c < 3h_{ef}$. If $c \geq 3h_{ef}$ then $f_{AV} = f_{AN}$.
4 Concrete thickness reduction factor in shear, f_{HV}, is applicable when edge distance $c < 3h_{ef}$. If $c \geq 3h_{ef}$ then $f_{HV} = 1.0$.

If a reduction factor value is in a shaded cell, this indicates that this specific edge distance may not be permitted with a certain spacing (or vice versa). Check with Figure 2 and Table 5 to calculate permissible edge distance, spacing and concrete thickness combinations.

Table 18 — Hilti Stainless Steel KB-TZ2 design strength based on concrete failure modes in uncracked concrete per ACI 318 Ch. 17, applicable for both hammer and core drilled installations [1,2,3,4]

Nominal anchor diameter in.	Effective embedment in. (mm)	Nominal embedment in. (mm)	Tension (lesser of concrete breakout / pullout) - ΦN_n				Shear (lesser of concrete breakout or pryout) - ΦV_n			
			f'_c = 2,500 psi (17.2 MPa) lb (kN)	f'_c = 3,000 psi (20.7 MPa) lb (kN)	f'_c = 4,000 psi (27.6 MPa) lb (kN)	f'_c = 6,000 psi (41.1 MPa) lb (kN)	f'_c = 2,500 psi (17.2 MPa) lb (kN)	f'_c = 3,000 psi (20.7 MPa) lb (kN)	f'_c = 4,000 psi (27.6 MPa) lb (kN)	f'_c = 6,000 psi (41.1 MPa) lb (kN)
1/4	1-1/2 (38)	1 3/4 (44)	705 (3.1)	760 (3.4)	850 (3.8)	995 (4.4)	1,545 (6.9)	1,690 (7.5)	1,950 (8.7)	2,390 (10.6)
3/8	1-1/2 (38)	1 7/8 (48)	1,435 (6.4)	1,570 (7.0)	1,815 (8.1)	2,220 (9.9)	1,545 (6.9)	1,690 (7.5)	1,950 (8.7)	2,390 (10.6)
	2 (51)	2 1/2 (64)	2,205 (9.8)	2,415 (10.7)	2,790 (12.4)	3,420 (15.2)	2,375 (10.6)	2,605 (11.6)	3,005 (13.4)	3,680 (16.4)
	2-1/2 (64)	3 (76)	2,720 (12.1)	2,910 (12.9)	3,235 (14.4)	3,760 (16.7)	6,640 (29.5)	7,275 (32.4)	8,400 (37.4)	10,290 (45.8)
1/2	2 (51)	2 1/2 (64)	2,195 (9.8)	2,390 (10.6)	2,725 (12.1)	3,285 (14.6)	2,375 (10.6)	2,605 (11.6)	3,005 (13.4)	3,680 (16.4)
	2-1/2 (64)	3 (76)	2,605 (11.6)	2,855 (12.7)	3,295 (14.7)	4,040 (18.0)	6,640 (29.5)	7,275 (32.4)	8,400 (37.4)	10,290 (45.8)
	3-1/4 (83)	3 3/4 (95)	3,575 (15.9)	3,915 (17.4)	4,520 (20.1)	5,540 (24.6)	9,845 (43.8)	10,785 (48.0)	12,450 (55.4)	15,250 (67.8)
5/8	2-3/4 (70)	3 1/4 (83)	2,655 (11.8)	2,910 (12.9)	3,360 (14.9)	4,115 (18.3)	7,660 (34.1)	8,395 (37.3)	9,690 (43.1)	11,870 (52.8)
	3-1/4 (83)	3 3/4 (95)	3,910 (17.4)	4,220 (18.8)	4,765 (21.2)	5,645 (25.1)	9,845 (43.8)	10,785 (48.0)	12,450 (55.4)	15,250 (67.8)
	4 (102)	4 1/2 (114)	5,235 (23.3)	5,700 (25.4)	6,525 (29.0)	7,895 (35.1)	13,440 (59.8)	14,725 (65.5)	17,000 (75.6)	20,820 (92.6)
3/4	3-1/4 (83)	4 (102)	4,570 (20.3)	5,005 (22.3)	5,780 (25.7)	7,080 (31.5)	9,845 (43.8)	10,785 (48.0)	12,450 (55.4)	15,250 (67.8)
	3-3/4[6] (95)	4 1/2 (114)	6,370 (28.3)	6,980 (31.0)	8,060 (35.9)	9,870 (43.9)	13,725 (61.1)	15,035 (66.9)	17,360 (77.2)	21,265 (94.6)
	4-3/4 (121)	5 1/2 (140)	8,075 (35.9)	8,845 (39.3)	10,215 (45.4)	12,510 (55.6)	17,390 (77.4)	19,050 (84.7)	22,000 (97.9)	26,945 (119.9)
1	4 (102)	4 5/8 (117)	7,020 (31.2)	7,690 (34.2)	8,880 (39.5)	10,875 (48.4)	15,120 (67.3)	16,565 (73.7)	19,125 (85.1)	23,425 (104.2)
	5-3/4 (146)	6 3/8 (162)	12,100 (53.8)	13,255 (59.0)	15,305 (68.1)	18,745 (83.4)	26,060 (115.9)	28,545 (127.0)	32,965 (146.6)	40,370 (179.6)

Table 19 — Hilti Stainless Steel KB-TZ2 design strength based on concrete failure modes in cracked concrete per ACI 318 Ch. 17, applicable for both hammer and core drilled installations [1,2,3,4,5]

Nominal anchor diameter in.	Effective embedment in. (mm)	Nominal embedment in. (mm)	Tension (lesser of concrete breakout / pullout) - ΦN_n				Shear (lesser of concrete breakout or pryout) - ΦV_n			
			f'_c = 2,500 psi (17.2 MPa) lb (kN)	f'_c = 3,000 psi (20.7 MPa) lb (kN)	f'_c = 4,000 psi (27.6 MPa) lb (kN)	f'_c = 6,000 psi (41.1 MPa) lb (kN)	f'_c = 2,500 psi (17.2 MPa) lb (kN)	f'_c = 3,000 psi (20.7 MPa) lb (kN)	f'_c = 4,000 psi (27.6 MPa) lb (kN)	f'_c = 6,000 psi (41.1 MPa) lb (kN)
1/4	1-1/2 (38)	1 3/4 (44)	300 (1.3)	330 (1.5)	380 (1.7)	465 (2.1)	1,095 (4.9)	1,195 (5.3)	1,385 (6.2)	1,695 (7.5)
3/8	1-1/2 (38)	1 7/8 (48)	1,255 (5.6)	1,375 (6.1)	1,585 (7.1)	1,940 (8.6)	1,350 (6.0)	1,480 (6.6)	1,710 (7.6)	2,090 (9.3)
	2 (51)	2 1/2 (64)	1,930 (8.6)	2,115 (9.4)	2,440 (10.9)	2,990 (13.3)	2,080 (9.3)	2,275 (10.1)	2,630 (11.7)	3,220 (14.3)
	2-1/2 (64)	3 (76)	2,185 (9.7)	2,390 (10.6)	2,765 (12.3)	3,385 (15.1)	4,705 (20.9)	5,155 (22.9)	5,950 (26.5)	7,285 (32.4)
1/2	2 (51)	2 1/2 (64)	1,565 (7.0)	1,710 (7.6)	1,975 (8.8)	2,420 (10.8)	1,685 (7.5)	1,845 (8.2)	2,130 (9.5)	2,605 (11.6)
	2-1/2 (64)	3 (76)	2,700 (12.0)	2,955 (13.1)	3,415 (15.2)	4,180 (18.6)	5,810 (25.8)	6,365 (28.3)	7,350 (32.7)	9,000 (40.0)
	3-1/4[8] (83)	3 3/4 (95)	3,235 (14.4)	3,545 (15.8)	4,095 (18.2)	5,015 (22.3)	6,970 (31.0)	7,640 (34.0)	8,820 (39.2)	10,800 (48.0)
5/8	2-3/4 (70)	3 1/4 (83)	3,110 (13.8)	3,410 (15.2)	3,935 (17.5)	4,820 (21.4)	6,705 (29.8)	7,345 (32.7)	8,480 (37.7)	10,385 (46.2)
	3-1/4 (83)	3 3/4 (95)	4,000 (17.8)	4,380 (19.5)	5,060 (22.5)	6,195 (27.6)	8,615 (38.3)	9,435 (42.0)	10,895 (48.5)	13,345 (59.4)
	4 (102)	4 1/2 (114)	4,420 (19.7)	4,840 (21.5)	5,590 (24.9)	6,845 (30.4)	9,520 (42.3)	10,430 (46.4)	12,040 (53.6)	14,750 (65.6)
3/4	3-1/4 (83)	4 (102)	4,000 (17.8)	4,380 (19.5)	5,060 (22.5)	6,195 (27.6)	8,615 (38.3)	9,435 (42.0)	10,895 (48.5)	13,345 (59.4)
	3-3/4[7] (95)	4 1/2 (114)	4,955 (22.0)	5,430 (24.2)	6,270 (27.9)	7,680 (34.2)	10,675 (47.5)	11,695 (52.0)	13,505 (60.1)	16,540 (73.6)
	4-3/4 (121)	5 1/2 (140)	5,715 (25.4)	6,260 (27.8)	7,230 (32.2)	8,855 (39.4)	15,220 (67.7)	16,670 (74.2)	19,250 (85.6)	23,575 (104.9)
1	4 (102)	4 5/8 (117)	6,240 (27.8)	6,835 (30.4)	7,895 (35.1)	9,665 (43.0)	13,440 (59.8)	14,725 (65.5)	17,000 (75.6)	20,820 (92.6)
	5-3/4 (146)	6 3/8 (162)	9,410 (41.9)	10,310 (45.9)	11,905 (53.0)	14,580 (64.9)	20,270 (90.2)	22,205 (98.8)	25,640 (114.1)	31,400 (139.7)

1 See Section 3.1.8 to convert design strength value to ASD value.
2 Linear interpolation between embedment depths and concrete compressive strengths is not permitted.
3 Apply spacing, edge distance, and concrete thickness factors in tables 22 to 33 as necessary. Compare to the steel values in Table 20. The lesser of the values is to be used for the design.
4 Tabular values are for normal weight concrete only. For lightweight concrete multiply design strength by λ_a as follows: For sand-lightweight, λ_a = 0.68; for all-lightweight, λ_a = 0.60.
5 Tabular values are for static loads only. Seismic design is not permitted for uncracked concrete. For seismic tension loads, multiply cracked concrete tabular values in tension only by $\alpha_{N,seis}$ = 0.75.
No reduction needed for seismic shear, except for the 3/4 bolts where $\alpha_{V,seis}$ = 0.81. See Section 3.1.8 for additional information on seismic applications.
6 For core drilled installations of 3/4“ anchors installed at 3-3/4“ effective embedment, apply a reduction factor of 0.89 to the design tension strength.
7 For core drilled installations of 3/4" anchors installed at 3-3/4“ effective embedment, apply a reduction factor of 0.81 to the design tension strength.
8 For core drilled installations of 1/2" anchors installed at 3-1/4 effective embedment, apply a reduction factor of 0.85 to the design tension strength.

Table 20 — Hilti Stainless Steel KB-TZ2 design strength based on steel failure per ACI 318 Ch. 17 [1,2]

Nominal anchor diameter in.	Effective embedment depth in. (mm)			Tensile [3] ϕN_{sa} lb (kN)	Shear [4] ϕV_{sa} lb (kN)	Seismic Shear [5] ϕV_{sa} lb (kN)
1/4	1-1/2 (38)			2,190 (9.7)	950 (4.2)	720 (3.2)
3/8	1-1/2 (38)			4,635 (20.6)	3,000 (13.3)	3,000 (13.3)
3/8	2 (51)		2-1/2 (64)	4,635 (20.6)	3,175 (14.1)	3,175 (14.1)
1/2	2 (51)	2-1/2 (64)	3-1/4 (83)	8,905 (39.6)	5,425 (24.1)	5,425 (24.1)
5/8	2-3/4 (70)	3-1/4 (83)	4 (102)	14,125 (62.8)	8,030 (35.7)	8,030 (35.7)
3/4	3-1/4 (83)	3-3/4 (95)	4-3/4 (121)	18,035 (80.2)	10,765 (47.9)	8,755 (38.9)
1 (25.4)	4 (102)			35,215 (156.6)	14,920 (66.4)	8,755 (38.9)
1 (25.4)	5-3/4 (146)			35,215 (156.6)	20,410 (90.8)	8,755 (38.9)

1 See Section 3.1.8 to convert design strength value to ASD value.
2 Hilti KB-TZ2 stainless steel anchors are to be considered ductile steel elements.
3 Tensile $\phi N_{sa} = \phi A_{se,N} f_{uta}$ as noted in ACI 318 Ch. 17.
4 Shear values determined by static shear tests with $\phi V_{sa} < \phi\ 0.60\ A_{se,V} f_{uta}$ as noted in ACI 318 Ch. 17.
5 Seismic shear values determined by seismic shear tests with $\phi V_{sa} \leq \phi\ 0.60\ A_{se,V} f_{uta}$ as noted in ACI 318 Ch. 17.
See Section 3.1.8 for additional information on seismic applications.

Figure 3

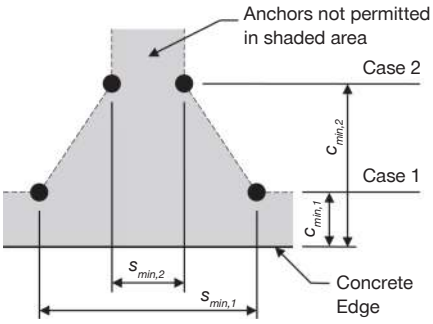

For a specific edge distance, the permitted spacing is calculated as follows:

$$s \geq s_{min,2} + \frac{(s_{min,1} - s_{min,2})}{(c_{min,1} - c_{min,2})}(c - c_{min,2})$$

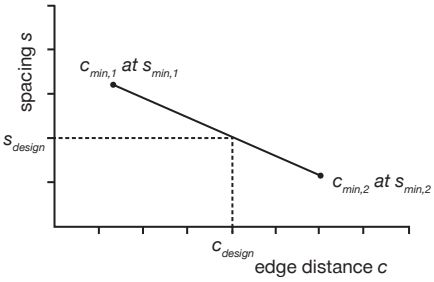

Table 21 — Hilti KB-TZ2 stainless steel installation parameters[1]

Setting information	Symbol	Units	Nominal Anchor diameter (in.)													
			1/4	3/8			1/2			5/8			3/4		1	
Effective embedment	h_{ef}	in.	1-1/2	1-1/2	2	2-1/2	2	2-1/2	3 1/4	2-3/4	3-1/4	4	3-1/4	3-3/4	4-3/4	4	5-3/4
		(mm)	(38)	(38)	(51)	(64)	(51)	(64)	(83)	(70)	(83)	(102)	(83)	(95)	(121)	(102)	(146)
Min. member thickness	h_{min}	in.	3-1/4	3-1/4	4	5	4	5	5-1/2	5	5-1/2	6	5-1/2	6	8	8	10
		(mm)	(83)	(83)	(102)	(127)	(102)	(127)	(140)	(127)	(140)	(152)	(140)	(152)	(203)	(203)	(254)
Case 1	$c_{min,1}$	in.	1-1/2	5	2-1/2	2-1/2	2-3/4	2-1/2	2-1/4	4	3-1/4	2-1/4	5	4	3 3/4	3-3/4	3
		(mm)	(38)	(127)	(64)	(64)	(70)	(64)	(57)	(102)	(83)	(57)	(127)	(102)	(95)	(95)	(76)
	for $s_{min,1} \geq$	in.	1-1/2	8	5	5	5-1/2	4-1/2	5-1/4	7	5-1/2	7	11	7-1/2	5 3/4	10	6-3/4
		(mm)	(38)	(203)	(127)	(127)	(140)	(114)	(133)	(178)	(140)	(178)	(279)	(191)	(146)	(254)	(171)
Case 2	$c_{min,2}$	in.	1-1/2	8	4	3-1/2	4-1/8	4-1/2	4-1/2	5-1/2	4	4-1/4	8	6	5-1/4	4-1/4	3-3/4
		(mm)	(38)	(203)	(102)	(89)	(105)	(114)	(114)	(140)	(102)	(108)	(203)	(152)	(133)	(108)	(95)
	for $s_{min,2} \geq$	in.	1-1/2	5	2-1/4	2-1/4	2-3/4	2-1/2	2	5-1/2	2-3/4	3	5	4	4	5	4-3/4
		(mm)	(38)	(127)	(57)	(57)	(70)	(64)	(51)	(140)	(70)	(76)	(127)	(102)	(102)	(127)	(121)

1 Linear interpolation is permitted to establish an edge distance and spacing combination between Case 1 and Case 2. Linear interpolation for a specific edge distance c, where $c_{min,1} < c < c_{min,2}$, will determine the permissible spacings.

Table 22 — Load adjustment factors for Stainless Steel 1/4-in. diameter KB-TZ2 in uncracked concrete [1,2]

1/4-in. KB-TZ2 uncracked concrete			Spacing factor in tension f_{AN}	Edge distance factor in tension f_{RN}	Spacing factor in shear [3] f_{AV}	Edge distance in shear ⊥ Toward edge f_{RV}	Edge distance in shear ∥ To edge f_{RV}	Conc. thickness factor in shear [4] f_{HV}
Effective Embedment h_{ef}		in.	1-1/2	1-1/2	1-1/2	1-1/2	1-1/2	1-1/2
		(mm)	(38)	(38)	(38)	(38)	(38)	(38)
Nominal Embedment h_{nom}		in.	1-3/4	1-3/4	1-3/4	1-3/4	1-3/4	1-3/4
		(mm)	(44)	(44)	(44)	(44)	(44)	(44)
Spacing (s) / Edge Distance (c_a) / Concrete Thickness (h) - in. (mm)	1-1/2	(38)	0.67	0.42	0.56	0.23	0.42	n/a
	2	(51)	0.72	0.51	0.58	0.35	0.51	n/a
	2-1/2	(64)	0.78	0.63	0.60	0.49	0.63	n/a
	3	(76)	0.83	0.75	0.63	0.65	0.75	n/a
	3-1/4	(83)	0.86	0.81	0.64	0.73	0.81	0.74
	3-1/2	(89)	0.89	0.88	0.65	0.82	0.88	0.76
	4	(102)	0.94	1.00	0.67	1.00	1.00	0.82
	5	(127)	1.00		0.71			0.91
	6	(152)			0.75			1.00
	7	(178)			0.79			
	8	(203)			0.83			
	9	(229)			0.88			
	> 12	(305)			1.00			

3.3.5

Table 23 — Load adjustment factors for Stainless Steel 1/4-in. diameter KB-TZ2 in cracked concrete [1,2]

1/4-in. KB-TZ2 cracked concrete			Spacing factor in tension f_{AN}	Edge distance factor in tension f_{RN}	Spacing factor in shear [3] f_{AV}	Edge distance in shear ⊥ Toward edge f_{RV}	Edge distance in shear ∥ To edge f_{RV}	Conc. thickness factor in shear [4] f_{HV}
Effective Embedment h_{ef}		in.	1-1/2	1-1/2	1-1/2	1-1/2	1-1/2	1-1/2
		(mm)	(38)	(38)	(38)	(38)	(38)	(38)
Nominal Embedment h_{nom}		in.	1-3/4	1-3/4	1-3/4	1-3/4	1-3/4	1-3/4
		(mm)	(44)	(44)	(44)	(44)	(44)	(44)
Spacing (s) / Edge Distance (c_a) / Concrete Thickness (h) - in. (mm)	1-1/2	(38)	0.67	0.75	0.57	0.29	0.59	n/a
	2	(51)	0.72	0.91	0.60	0.45	0.91	n/a
	2-1/2	(64)	0.78	1.00	0.62	0.63	1.00	n/a
	3	(76)	0.83		0.65	0.83		n/a
	3-1/4	(83)	0.86		0.66	0.94		0.80
	3-1/2	(89)	0.89		0.67	1.00		0.83
	4	(102)	0.94		0.70			0.89
	5	(127)	1.00		0.75			0.99
	6	(152)			0.80			1.00
	7	(178)			0.84			
	8	(203)			0.89			
	9	(229)			0.94			
	> 12	(305)			1.00			

1 Linear interpolation not permitted
2 When combining multiple load adjustment factors (e.g. for a 4 anchor pattern in a corner with thin concrete member) the design can become very conservative. To optimize the design, use Hilti PROFIS Engineering Design software or perform anchor calculation using design equations from ACI 318 Ch. 17 or CSA A23.3 Annex D.
3 Spacing factor reduction in shear, f_{AV}, is applicable when edge distance $c < 3h_{ef}$. If $c \geq 3h_{ef}$, then $f_{AV} = f_{AN}$.
4 Concrete thickness reduction factor in shear, f_{HV}, is applicable when edge distance $c < 3h_{ef}$. If $c \geq 3h_{ef}$ then $f_{HV} = 1.0$.

Table 24 — Load adjustment factors for Stainless Steel 3/8-in. diameter KB-TZ2 in uncracked concrete [1,4]

3/8-in. KB-TZ2 uncracked concrete			Spacing factor in tension f_{AN}			Edge distance factor in tension f_{RN}			Spacing factor in shear [3] f_{AV}			Edge distance in shear ⊥ Toward edge f_{RV}			Edge distance in shear ∥ To edge f_{RV}			Concrete thickness factor in shear [4] f_{HV}		
Effective Embedment h_{ef}		in.	1-1/2	2	2-1/2	1-1/2	2	2-1/2	1-1/2	2	2-1/2	1-1/2	2	2-1/2	1-1/2	2	2-1/2	1-1/2	2	2-1/2
		(mm)	(38)	(51)	(64)	(38)	(51)	(64)	(38)	(51)	(64)	(38)	(51)	(64)	(38)	(51)	(64)	(38)	(51)	(64)
Nominal Embedment h_{nom}		in.	1-7/8	2-1/2	3	1-7/8	2-1/2	3	1-7/8	2-1/2	3	1-7/8	2-1/2	3	1-7/8	2-1/2	3	1-7/8	2-1/2	3
		(mm)	(48)	(64)	(76)	(48)	(64)	(76)	(48)	(64)	(76)	(48)	(64)	(76)	(48)	(64)	(76)	(48)	(64)	(76)
Spacing (s) / Edge Distance (c_a) / Concrete Thickness (h) - in. (mm)	2-1/4	(57)	n/a	0.69	0.65	n/a	n/a	n/a	n/a	0.57	0.55	n/a	n/a	n/a	n/a	n/a	n/a	n/a	n/a	n/a
	2-1/2	(64)	n/a	0.71	0.67	n/a	0.48	0.68	n/a	0.58	0.55	n/a	0.31	0.18	n/a	0.48	0.37	n/a	n/a	n/a
	3	(76)	n/a	0.75	0.70	n/a	0.55	0.77	n/a	0.59	0.56	n/a	0.40	0.24	n/a	0.55	0.48	n/a	n/a	n/a
	3-1/4	(83)	n/a	0.77	0.72	n/a	0.59	0.81	n/a	0.60	0.57	n/a	0.45	0.27	n/a	0.59	0.54	0.69	n/a	n/a
	3-1/2	(89)	n/a	0.79	0.73	n/a	0.64	0.86	n/a	0.61	0.58	n/a	0.51	0.30	n/a	0.64	0.61	0.72	n/a	n/a
	4	(102)	n/a	0.83	0.77	n/a	0.73	0.97	n/a	0.62	0.59	n/a	0.62	0.37	n/a	0.73	0.74	0.77	0.70	n/a
	5	(127)	1.00	0.92	0.83	1.00	0.91	1.00	0.69	0.65	0.61	1.00	0.87	0.52	1.00	0.91	1.00	0.86	0.78	0.66
	6	(152)	1.00	1.00	0.90	1.00	1.00		0.72	0.68	0.63	1.00	1.00	0.68	1.00	1.00		0.94	0.85	0.72
	8	(203)	1.00		1.00	1.00			0.80	0.74	0.67	1.00		1.00	1.00			1.00	0.98	0.83
	10	(254)							0.87	0.80	0.71								1.00	0.93
	12	(305)							0.94	0.86	0.76									1.00
	18	(457)							1.00	1.00	0.89									
	> 24	(610)									1.00									

Table 25 — Load adjustment factors for Stainless Steel 3/8-in. diameter KB-TZ2 in cracked concrete [1,4]

3/8-in. KB-TZ2 cracked concrete			Spacing factor in tension f_{AN}			Edge distance factor in tension f_{RN}			Spacing factor in shear [3] f_{AV}			Edge distance in shear ⊥ Toward edge f_{RV}			Edge distance in shear ∥ To edge f_{RV}			Concrete thickness factor in shear [4] f_{HV}		
Effective Embedment h_{ef}		in.	1-1/2	2	2-1/2	1-1/2	2	2-1/2	1-1/2	2	2-1/2	1-1/2	2	2-1/2	1-1/2	2	2-1/2	1-1/2	2	2-1/2
		(mm)	(38)	(51)	(64)	(38)	(51)	(64)	(38)	(51)	(64)	(38)	(51)	(64)	(38)	(51)	(64)	(38)	(51)	(64)
Nominal Embedment h_{nom}		in.	1-7/8	2-1/2	3	1-7/8	2-1/2	3	1-7/8	2-1/2	3	1-7/8	2-1/2	3	1-7/8	2-1/2	3	1-7/8	2-1/2	3
		(mm)	(48)	(64)	(76)	(48)	(64)	(76)	(48)	(64)	(76)	(48)	(64)	(76)	(48)	(64)	(76)	(48)	(64)	(76)
Spacing (s) / Edge Distance (c_a) / Concrete Thickness (h) - in. (mm)	2-1/4	(57)	n/a	0.69	0.65	n/a	n/a	n/a	n/a	0.58	0.55	n/a	n/a	n/a	n/a	n/a	n/a	n/a	n/a	n/a
	2-1/2	(64)	n/a	0.71	0.67	n/a	0.87	0.75	n/a	0.59	0.55	n/a	0.40	0.18	n/a	0.80	0.37	n/a	n/a	n/a
	3	(76)	n/a	0.75	0.70	n/a	1.00	0.85	n/a	0.61	0.56	n/a	0.52	0.24	n/a	1.00	0.48	n/a	n/a	n/a
	3-1/4	(83)	n/a	0.77	0.72	n/a	1.00	0.90	n/a	0.62	0.57	n/a	0.59	0.27	n/a	1.00	0.55	0.78	n/a	n/a
	3-1/2	(89)	n/a	0.79	0.73	n/a	1.00	0.95	n/a	0.63	0.58	n/a	0.66	0.31	n/a	1.00	0.61	0.81	n/a	n/a
	4	(102)	n/a	0.83	0.77	n/a	1.00	1.00	n/a	0.64	0.59	n/a	0.81	0.37	n/a	1.00	0.75	0.86	0.76	n/a
	5	(127)	1.00	0.92	0.83	1.00			0.73	0.68	0.61	1.00	1.00	0.52	1.00		1.00	0.96	0.85	0.66
	6	(152)	1.00	1.00	0.90	1.00			0.78	0.72	0.63	1.00		0.69	1.00			1.00	0.93	0.72
	8	(203)	1.00		1.00	1.00			0.87	0.79	0.67	1.00		1.00	1.00				1.00	0.83
	10	(254)							0.96	0.86	0.72									0.93
	12	(305)							1.00	0.93	0.76									1.00
	18	(457)								1.00	0.89									
	> 24	(610)									1.00									

1 Linear interpolation not permitted
2 When combining multiple load adjustment factors (e.g. for a 4 anchor pattern in a corner with thin concrete member) the design can become very conservative. To optimize the design, use Hilti PROFIS Engineering Design software or perform anchor calculation using design equations from ACI 318 Ch. 17 or CSA A23.3 Annex D.
3 Spacing factor reduction in shear, f_{AV}, is applicable when edge distance $c < 3h_{ef}$. If $c \geq 3h_{ef}$ then $f_{AV} = f_{AN}$.
4 Concrete thickness reduction factor in shear, f_{HV}, is applicable when edge distance $c < 3h_{ef}$. If $c \geq 3h_{ef}$ then $f_{HV} = 1.0$.

If a reduction factor value is in a shaded cell, this indicates that this specific edge distance may not be permitted with a certain spacing (or vice versa). Check with Figure 3 and Table 21 to calculate permissible edge distance, spacing and concrete thickness combinations.

Table 26 — Load adjustment factors for Stainless Steel 1/2-in. diameter KB-TZ2 in uncracked concrete [1,2]

1/2-in. KB-TZ2 uncracked concrete		Spacing factor in tension f_{AN}			Edge distance factor in tension f_{RN}			Spacing factor in shear [3] f_{AV}			Edge distance in shear ⊥ Toward edge f_{RV}			Edge distance in shear ‖ To edge f_{RV}			Concrete thickness factor in shear [4] f_{HV}		
Effective Embedment h_{ef}	in.	2	2-1/2	3-1/4	2	2-1/2	3-1/4	2	2-1/2	3-1/4	2	2-1/2	3-1/4	2	2-1/2	3-1/4	2	2-1/2	3-1/4
	(mm)	(51)	(64)	(83)	(51)	(64)	(83)	(51)	(64)	(83)	(51)	(64)	(83)	(51)	(64)	(83)	(51)	(64)	(83)
Nominal Embedment h_{nom}	in.	2-1/2	3	3-3/4	2-1/2	3	3-3/4	2-1/2	3	3-3/4	2-1/2	3	3-3/4	2-1/2	3	3-3/4	2-1/2	3	3-3/4
	(mm)	(64)	(76)	(95)	(64)	(76)	(95)	(64)	(76)	(95)	(64)	(76)	(95)	(64)	(76)	(95)	(64)	(76)	(95)
Spacing (s) / Edge Distance (c_a) / Concrete Thickness (h) - in. (mm)																			
2	(51)	n/a	n/a	0.60	n/a	n/a	n/a	n/a	n/a	0.54	n/a	n/a	n/a	n/a	n/a	n/a	n/a	n/a	n/a
2-1/4	(57)	n/a	n/a	0.62	n/a	n/a	0.40	n/a	n/a	0.54	n/a	n/a	0.12	n/a	n/a	0.24	n/a	n/a	n/a
2-1/2	(64)	n/a	n/a	0.63	n/a	0.45	0.42	n/a	n/a	0.55	n/a	0.20	0.14	n/a	0.40	0.28	n/a	n/a	n/a
2-3/4	(70)	n/a	0.68	0.64	0.51	0.48	0.44	n/a	0.56	0.55	0.35	0.23	0.16	0.51	0.46	0.33	n/a	n/a	n/a
3	(76)	0.75	0.70	0.65	0.55	0.51	0.46	0.59	0.57	0.55	0.40	0.26	0.19	0.55	0.51	0.37	n/a	n/a	n/a
4	(102)	0.83	0.77	0.71	0.73	0.64	0.56	0.62	0.59	0.57	0.62	0.40	0.29	0.73	0.64	0.56	0.70	n/a	n/a
4-1/8	(105)	0.84	0.78	0.71	0.75	0.66	0.57	0.63	0.59	0.57	0.65	0.42	0.30	0.75	0.66	0.57	0.71	n/a	n/a
4-1/2	(114)	0.88	0.80	0.73	0.82	0.72	0.61	0.64	0.60	0.58	0.74	0.48	0.34	0.82	0.72	0.61	0.74	n/a	n/a
4-3/4	(121)	0.90	0.82	0.74	0.86	0.76	0.64	0.64	0.61	0.59	0.80	0.52	0.37	0.86	0.76	0.64	0.76	n/a	n/a
5	(127)	0.92	0.83	0.76	0.91	0.80	0.67	0.65	0.61	0.59	0.87	0.56	0.40	0.91	0.80	0.67	0.78	0.67	n/a
5-1/4	(133)	0.94	0.85	0.77	0.95	0.84	0.70	0.66	0.62	0.60	0.93	0.61	0.43	0.95	0.84	0.70	0.80	0.69	n/a
5-1/2	(140)	0.96	0.87	0.78	1.00	0.88	0.73	0.67	0.63	0.60	1.00	0.65	0.46	1.00	0.88	0.73	0.82	0.71	0.63
6	(152)	1.00	0.90	0.81		0.96	0.80	0.68	0.64	0.61		0.74	0.53		0.96	0.80	0.85	0.74	0.66
8	(203)		1.00	0.91		1.00	1.00	0.74	0.68	0.64		1.00	0.81		1.00	1.00	0.98	0.85	0.76
12	(305)			1.00				0.86	0.77	0.72			1.00				1.00	1.00	0.93
18	(457)							1.00	0.91	0.83									1.00
24	(610)								1.00	0.93									
> 30	(762)									1.00									

3.3.5

Table 27 — Load adjustment factors for Stainless Steel 1/2-in. diameter KB-TZ2 in cracked concrete [1,2]

1/2-in. KB-TZ2 cracked concrete		Spacing factor in tension f_{AN}			Edge distance factor in tension f_{RN}			Spacing factor in shear [3] f_{AV}			Edge distance in shear ⊥ Toward edge f_{RV}			Edge distance in shear ‖ To edge f_{RV}			Concrete thickness factor in shear [4] f_{HV}		
Effective Embedment h_{ef}	in.	2	2-1/2	3-1/4	2	2-1/2	3-1/4	2	2-1/2	3-1/4	2	2-1/2	3-1/4	2	2-1/2	3-1/4	2	2-1/2	3-1/4
	(mm)	(51)	(64)	(83)	(51)	(64)	(83)	(51)	(64)	(83)	(51)	(64)	(83)	(51)	(64)	(83)	(51)	(64)	(83)
Nominal Embedment h_{nom}	in.	2-1/2	3	3-3/4	2-1/2	3	3-3/4	2-1/2	3	3-3/4	2-1/2	3	3-3/4	2-1/2	3	3-3/4	2-1/2	3	3-3/4
	(mm)	(64)	(76)	(95)	(64)	(76)	(95)	(64)	(76)	(95)	(64)	(76)	(95)	(64)	(76)	(95)	(64)	(76)	(95)
Spacing (s) / Edge Distance (c_a) / Concrete Thickness (h) - in. (mm)																			
2	(51)	n/a	n/a	0.60	n/a	n/a	n/a	n/a	n/a	0.54	n/a	n/a	n/a	n/a	n/a	n/a	n/a	n/a	n/a
2-1/4	(57)	n/a	n/a	0.62	n/a	n/a	0.61	n/a	n/a	0.54	n/a	n/a	0.12	n/a	n/a	0.24	n/a	n/a	n/a
2-1/2	(64)	n/a	n/a	0.63	n/a	0.75	0.65	n/a	n/a	0.55	n/a	0.16	0.14	n/a	0.33	0.29	n/a	n/a	n/a
2-3/4	(70)	n/a	0.68	0.64	0.93	0.80	0.68	n/a	0.55	0.55	0.62	0.19	0.16	0.93	0.38	0.33	n/a	n/a	n/a
3	(76)	0.75	0.70	0.65	1.00	0.85	0.71	0.63	0.56	0.55	0.71	0.21	0.19	1.00	0.43	0.38	n/a	n/a	n/a
4	(102)	0.83	0.77	0.71	1.00	1.00	0.86	0.68	0.58	0.57	1.00	0.33	0.29	1.00	0.66	0.58	0.84	n/a	n/a
4-1/8	(105)	0.84	0.78	0.71	1.00	1.00	0.88	0.68	0.58	0.58	1.00	0.34	0.30	1.00	0.69	0.61	0.85	n/a	n/a
4-1/2	(114)	0.88	0.80	0.73		1.00	0.94	0.70	0.59	0.58		0.39	0.34		0.79	0.69	0.89	n/a	n/a
4-3/4	(121)	0.90	0.82	0.74			0.98	0.71	0.59	0.59		0.43	0.37		0.85	0.75	0.91	n/a	n/a
5	(127)	0.92	0.83	0.76			1.00	0.72	0.60	0.59		0.46	0.40		0.92	0.81	0.94	0.63	n/a
5-1/4	(133)	0.94	0.85	0.77				0.73	0.60	0.60		0.49	0.43		0.99	0.87	0.96	0.65	n/a
5-1/2	(140)	0.96	0.87	0.78				0.74	0.61	0.60		0.53	0.47		1.00	0.93	0.98	0.66	0.63
6	(152)	1.00	0.90	0.81				0.76	0.62	0.61		0.60	0.53			1.00	1.00	0.69	0.66
8	(203)		1.00	0.91				0.85	0.66	0.65		0.93	0.82					0.80	0.76
12	(305)			1.00				1.00	0.74	0.72		1.00	1.00					0.98	0.94
18	(457)								0.86	0.83								1.00	1.00
24	(610)								0.98	0.94									
> 30	(762)								1.00	1.00									

1 Linear interpolation not permitted
2 When combining multiple load adjustment factors (e.g. for a 4 anchor pattern in a corner with thin concrete member) the design can become very conservative. To optimize the design, use Hilti PROFIS Engineering Design software or perform anchor calculation using design equations from ACI 318 Ch. 17 or CSA A23.3 Annex D.
3 Spacing factor reduction in shear, f_{AV}, is applicable when edge distance $c < 3h_{ef}$. If $c \geq 3h_{ef}$ then $f_{AV} = f_{AN}$.
4 Concrete thickness reduction factor in shear, f_{HV}, is applicable when edge distance $c < 3h_{ef}$. If $c \geq 3h_{ef}$ then $f_{HV} = 1.0$.

If a reduction factor value is in a shaded cell, this indicates that this specific edge distance may not be permitted with a certain spacing (or vice versa). Check with Figure 3 and Table 21 to calculate permissible edge distance, spacing and concrete thickness combinations.

Table 28 — Load adjustment factors for Stainless Steel 5/8-in. diameter KB-TZ2 in uncracked concrete [1,2]

5/8-in. KB-TZ2 uncracked concrete		Spacing factor in tension f_{AN}			Edge distance factor in tension f_{RN}			Spacing factor in shear [3] f_{AV}			Edge distance in shear ⊥ Toward edge f_{RV}			Edge distance in shear ‖ To edge f_{RV}			Concrete thickness factor in shear [4] f_{HV}		
Effective Embedment h_{ef}	in.	2-3/4	3-1/4	4	2-3/4	3-1/4	4	2-3/4	3-1/4	4	2-3/4	3-1/4	4	2-3/4	3-1/4	4	2-3/4	3-1/4	4
	(mm)	(70)	(83)	(102)	(70)	(83)	(102)	(70)	(83)	(102)	(70)	(83)	(102)	(70)	(83)	(102)	(70)	(83)	(102)
Nominal Embedment h_{nom}	in.	3-1/4	3-3/4	4-1/2	3-1/4	3-3/4	4-1/2	3-1/4	3-3/4	4-1/2	3-1/4	3-3/4	4-1/2	3-1/4	3-3/4	4-1/2	3-1/4	3-3/4	4-1/2
	(mm)	(83)	(95)	(114)	(83)	(95)	(114)	(83)	(95)	(114)	(83)	(95)	(114)	(83)	(95)	(114)	(83)	(95)	(114)
Spacing (s) / Edge Distance (c_a) / Concrete Thickness (h) - in. (mm)																			
2-1/4	(57)	n/a	n/a	n/a	n/a	n/a	0.38	n/a	n/a	n/a	n/a	n/a	0.10	n/a	n/a	0.20	n/a	n/a	n/a
2-3/4	(70)	n/a	0.64	n/a	n/a	n/a	0.42	n/a	0.55	n/a	n/a	n/a	0.13	n/a	n/a	0.27	n/a	n/a	n/a
3	(76)	n/a	0.65	0.63	n/a	n/a	0.44	n/a	0.56	0.55	n/a	n/a	0.15	n/a	n/a	0.30	n/a	n/a	n/a
3-1/4	(83)	n/a	0.67	0.64	n/a	0.56	0.46	n/a	0.56	0.55	n/a	0.22	0.17	n/a	0.45	0.34	n/a	n/a	n/a
4	(102)	n/a	0.71	0.67	0.40	0.65	0.51	n/a	0.58	0.56	0.25	0.31	0.23	0.40	0.61	0.47	n/a	n/a	n/a
4-1/4	(108)	n/a	0.72	0.68	0.43	0.67	0.53	n/a	0.58	0.57	0.28	0.34	0.26	0.43	0.67	0.51	n/a	n/a	n/a
5	(127)	n/a	0.76	0.71	0.50	0.77	0.60	n/a	0.59	0.58	0.35	0.43	0.33	0.50	0.77	0.60	0.58	n/a	n/a
5-1/2	(140)	0.83	0.78	0.73	0.55	0.85	0.64	0.59	0.60	0.59	0.41	0.49	0.38	0.55	0.85	0.64	0.61	0.65	n/a
6	(152)	0.86	0.81	0.75	0.60	0.92	0.69	0.60	0.61	0.59	0.46	0.56	0.43	0.60	0.92	0.69	0.63	0.67	0.62
7	(178)	0.92	0.86	0.79	0.70	1.00	0.80	0.62	0.63	0.61	0.59	0.71	0.54	0.70	1.00	0.80	0.68	0.73	0.67
8	(203)	0.98	0.91	0.83	0.80		0.91	0.63	0.65	0.63	0.72	0.87	0.66	0.80		0.91	0.73	0.78	0.71
10	(254)	1.00	1.00	0.92	1.00		1.00	0.67	0.69	0.66	1.00	1.00	0.92	1.00		1.00	0.82	0.87	0.80
12	(305)			1.00				0.70	0.73	0.69			1.00				0.89	0.95	0.87
24	(610)							0.90	0.95	0.88							1.00	1.00	1.00
> 36	(914)							1.00	1.00	1.00									

Table 29 — Load adjustment factors for Stainless Steel 5/8-in. diameter KB-TZ2 in cracked concrete [1,2]

5/8-in. KB-TZ2 cracked concrete		Spacing factor in tension f_{AN}			Edge distance factor in tension f_{RN}			Spacing factor in shear [3] f_{AV}			Edge distance in shear ⊥ Toward edge f_{RV}			Edge distance in shear ‖ To edge f_{RV}			Concrete thickness factor in shear [4] f_{HV}		
Effective Embedment h_{ef}	in.	2-3/4	3-1/4	4	2-3/4	3-1/4	4	2-3/4	3-1/4	4	2-3/4	3-1/4	4	2-3/4	3-1/4	4	2-3/4	3-1/4	4
	(mm)	(70)	(83)	(102)	(70)	(83)	(102)	(70)	(83)	(102)	(70)	(83)	(102)	(70)	(83)	(102)	(70)	(83)	(102)
Nominal Embedment h_{nom}	in.	3-1/4	3-3/4	4-1/2	3-1/4	3-3/4	4-1/2	3-1/4	3-3/4	4-1/2	3-1/4	3-3/4	4-1/2	3-1/4	3-3/4	4-1/2	3-1/4	3-3/4	4-1/2
	(mm)	(83)	(95)	(114)	(83)	(95)	(114)	(83)	(95)	(114)	(83)	(95)	(114)	(83)	(95)	(114)	(83)	(95)	(114)
Spacing (s) / Edge Distance (c_a) / Concrete Thickness (h) - in. (mm)																			
2-1/4	(57)	n/a	n/a	n/a	n/a	n/a	0.56	n/a	n/a	n/a	n/a	n/a	0.10	n/a	n/a	0.20	n/a	n/a	n/a
2-3/4	(70)	n/a	0.64	n/a	n/a	n/a	0.61	n/a	0.55	n/a	n/a	n/a	0.13	n/a	n/a	0.27	n/a	n/a	n/a
3	(76)	n/a	0.65	0.63	n/a	n/a	0.64	n/a	0.55	0.55	n/a	n/a	0.15	n/a	n/a	0.31	n/a	n/a	n/a
3-1/4	(83)	n/a	0.67	0.64	n/a	0.75	0.66	n/a	0.55	0.55	n/a	0.18	0.17	n/a	0.37	0.35	n/a	n/a	n/a
4	(102)	n/a	0.71	0.67	0.98	0.86	0.75	n/a	0.57	0.56	0.31	0.25	0.24	0.62	0.50	0.47	n/a	n/a	n/a
4-1/4	(108)	n/a	0.72	0.68	1.00	0.90	0.78	n/a	0.57	0.57	0.34	0.27	0.26	0.68	0.55	0.52	n/a	n/a	n/a
5	(127)	n/a	0.76	0.71	1.00	1.00	0.87	n/a	0.58	0.58	0.43	0.35	0.33	0.87	0.70	0.66	0.62	n/a	n/a
5-1/2	(140)	0.83	0.78	0.73	1.00		0.93	0.61	0.59	0.59	0.50	0.40	0.38	1.00	0.81	0.76	0.65	0.60	n/a
6	(152)	0.86	0.81	0.75			1.00	0.61	0.60	0.60	0.57	0.46	0.43		0.92	0.87	0.68	0.63	0.62
7	(178)	0.92	0.86	0.79				0.63	0.62	0.61	0.72	0.58	0.55		1.00	1.00	0.73	0.68	0.67
8	(203)	0.98	0.91	0.83				0.65	0.63	0.63	0.88	0.71	0.67				0.78	0.73	0.71
10	(254)	1.00	1.00	0.92				0.69	0.67	0.66	1.00	0.99	0.93				0.87	0.81	0.80
12	(305)			1.00				0.73	0.70	0.69		1.00	1.00				0.96	0.89	0.87
24	(610)							0.96	0.90	0.88							1.00	1.00	1.00
> 36	(914)							1.00	1.00	1.00									

1 Linear interpolation not permitted
2 When combining multiple load adjustment factors (e.g. for a 4 anchor pattern in a corner with thin concrete member) the design can become very conservative. To optimize the design, use Hilti PROFIS Engineering Design software or perform anchor calculation using design equations from ACI 318 Ch. 17 or CSA A23.3 Annex D.
3 Spacing factor reduction in shear, f_{AV}, is applicable when edge distance $c < 3h_{ef}$. If $c \geq 3h_{ef}$ then $f_{AV} = f_{AN}$.
4 Concrete thickness reduction factor in shear, f_{HV}, is applicable when edge distance $c < 3h_{ef}$. If $c \geq 3h_{ef}$ then $f_{HV} = 1.0$.

If a reduction factor value is in a shaded cell, this indicates that this specific edge distance may not be permitted with a certain spacing (or vice versa). Check with Figure 3 and Table 21 to calculate permissible edge distance, spacing and concrete thickness combinations.

Table 30 — Load adjustment factors for Stainless Steel 3/4-in. diameter KB-TZ2 in uncracked concrete [1,2]

3/4-in. KB-TZ2 uncracked concrete			Spacing factor in tension f_{AN}			Edge distance factor in tension f_{RN}			Spacing factor in shear [3] f_{AV}			Edge distance in shear ⊥ Toward edge f_{RV}			Edge distance in shear ∥ To edge f_{RV}			Concrete thickness factor in shear [4] f_{HV}		
Effective Embedment h_{ef}		in.	3-1/4	3-3/4	4-3/4	3-1/4	3-3/4	4-3/4	3-1/4	3-3/4	4-3/4	3-1/4	3-3/4	4-3/4	3-1/4	3-3/4	4-3/4	3-1/4	3-3/4	4-3/4
		(mm)	(83)	(95)	(121)	(83)	(95)	(121)	(83)	(95)	(121)	(83)	(95)	(121)	(83)	(95)	(121)	(83)	(95)	(121)
Nominal Embedment h_{nom}		in.	4	4-1/2	5-1/2	4	4-1/2	5-1/2	4	4-1/2	5-1/2	4	4-1/2	5-1/2	4	4-1/2	5-1/2	4	4-1/2	5-1/2
		(mm)	(102)	(114)	(140)	(102)	(114)	(140)	(102)	(114)	(140)	(102)	(114)	(140)	(102)	(114)	(140)	(102)	(114)	(140)
Spacing (s) / Edge Distance (c_a) / Concrete Thickness (h) - in. (mm)	3-3/4	(95)	n/a	n/a	n/a	n/a	n/a	0.47	n/a	n/a	n/a	n/a	n/a	0.18	n/a	n/a	0.36	n/a	n/a	n/a
	4	(102)	n/a	0.68	0.64	n/a	0.44	0.48	n/a	0.56	0.56	n/a	0.24	0.20	n/a	0.44	0.40	n/a	n/a	n/a
	4-1/2	(114)	n/a	0.70	0.66	n/a	0.48	0.52	n/a	0.57	0.56	n/a	0.29	0.24	n/a	0.48	0.47	n/a	n/a	n/a
	5	(127)	0.76	0.72	0.68	0.42	0.51	0.55	0.57	0.58	0.57	0.27	0.33	0.28	0.42	0.51	0.55	n/a	n/a	n/a
	5-1/4	(133)	0.77	0.73	0.68	0.44	0.53	0.57	0.57	0.58	0.57	0.29	0.36	0.30	0.44	0.53	0.57	n/a	n/a	n/a
	5-1/2	(140)	0.78	0.74	0.69	0.46	0.55	0.59	0.58	0.59	0.58	0.31	0.39	0.32	0.46	0.55	0.59	0.55	n/a	n/a
	5-3/4	(146)	0.79	0.76	0.70	0.48	0.58	0.61	0.58	0.59	0.58	0.33	0.41	0.34	0.48	0.58	0.61	0.57	n/a	n/a
	6	(152)	0.81	0.77	0.71	0.50	0.60	0.63	0.58	0.60	0.58	0.35	0.44	0.36	0.50	0.60	0.63	0.58	0.62	n/a
	7	(178)	0.86	0.81	0.75	0.58	0.70	0.70	0.60	0.61	0.60	0.45	0.55	0.46	0.58	0.70	0.70	0.62	0.67	n/a
	7-1/2	(191)	0.88	0.83	0.76	0.63	0.75	0.75	0.60	0.62	0.61	0.49	0.61	0.51	0.63	0.75	0.75	0.65	0.69	n/a
	8	(203)	0.91	0.86	0.78	0.67	0.80	0.80	0.61	0.63	0.61	0.54	0.68	0.56	0.67	0.80	0.80	0.67	0.72	0.67
	9	(229)	0.96	0.90	0.82	0.75	0.90	0.90	0.63	0.64	0.63	0.65	0.81	0.67	0.75	0.90	0.90	0.71	0.76	0.71
	10	(254)	1.00	0.94	0.85	0.83	1.00	1.00	0.64	0.66	0.64	0.76	0.94	0.78	0.83	1.00	1.00	0.75	0.80	0.75
	11	(279)	1.00	0.99	0.89	0.92			0.65	0.68	0.66	0.88	1.00	0.90	0.92			0.78	0.84	0.79
	12	(305)		1.00	0.92	1.00			0.67	0.69	0.67	1.00		1.00	1.00			0.82	0.88	0.82
	16	(406)			1.00				0.72	0.76	0.73							0.94	1.00	0.95
	18	(457)							0.75	0.79	0.75							1.00		1.00
	24	(610)							0.83	0.89	0.84									
	> 36	(914)							1.00	1.00	1.00									

3.3.5

Table 31 — Load adjustment factors for Stainless Steel 3/4-in. diameter KB-TZ2 in cracked concrete [1,2]

3/4-in. KB-TZ2 cracked concrete			Spacing factor in tension f_{AN}			Edge distance factor in tension f_{RN}			Spacing factor in shear [3] f_{AV}			Edge distance in shear ⊥ Toward edge f_{RV}			Edge distance in shear ∥ To edge f_{RV}			Concrete thickness factor in shear [4] f_{HV}		
Effective Embedment h_{ef}		in.	3-1/4	3-3/4	4-3/4	3-1/4	3-3/4	4-3/4	3-1/4	3-3/4	4-3/4	3-1/4	3-3/4	4-3/4	3-1/4	3-3/4	4-3/4	3-1/4	3-3/4	4-3/4
		(mm)	(83)	(95)	(121)	(83)	(95)	(121)	(83)	(95)	(121)	(83)	(95)	(121)	(83)	(95)	(121)	(83)	(95)	(121)
Nominal Embedment h_{nom}		in.	4	4-1/2	5-1/2	4	4-1/2	5-1/2	4	4-1/2	5-1/2	4	4-1/2	5-1/2	4	4-1/2	5-1/2	4	4-1/2	5-1/2
		(mm)	(102)	(114)	(140)	(102)	(114)	(140)	(102)	(114)	(140)	(102)	(114)	(140)	(102)	(114)	(140)	(102)	(114)	(140)
Spacing (s) / Edge Distance (c_a) / Concrete Thickness (h) - in. (mm)	3-3/4	(95)	n/a	n/a	n/a	n/a	n/a	0.65	n/a	n/a	n/a	n/a	n/a	0.15	n/a	n/a	0.29	n/a	n/a	n/a
	4	(102)	n/a	0.68	0.64	n/a	0.78	0.68	n/a	0.56	0.55	n/a	0.22	0.16	n/a	0.44	0.32	n/a	n/a	n/a
	4-1/2	(114)	n/a	0.70	0.66	n/a	0.85	0.73	n/a	0.57	0.56	n/a	0.26	0.19	n/a	0.52	0.39	n/a	n/a	n/a
	5	(127)	0.76	0.72	0.68	1.00	0.91	0.77	0.59	0.58	0.56	0.37	0.31	0.23	0.74	0.61	0.45	n/a	n/a	n/a
	5-1/4	(133)	0.77	0.73	0.68	1.00	0.95	0.80	0.59	0.58	0.56	0.40	0.33	0.24	0.79	0.66	0.49	n/a	n/a	n/a
	5-1/2	(140)	0.78	0.74	0.69	1.00	0.98	0.83	0.59	0.58	0.57	0.43	0.35	0.26	0.85	0.71	0.52	0.61	n/a	n/a
	5-3/4	(146)	0.79	0.76	0.70	1.00	1.00	0.85	0.60	0.59	0.57	0.46	0.38	0.28	0.91	0.76	0.56	0.63	n/a	n/a
	6	(152)	0.81	0.77	0.71	1.00	1.00	0.88	0.60	0.59	0.57	0.49	0.40	0.30	0.97	0.81	0.59	0.64	0.60	n/a
	7	(178)	0.86	0.81	0.75	1.00		0.99	0.62	0.61	0.59	0.61	0.51	0.37	1.00	1.00	0.75	0.69	0.65	n/a
	7-1/2	(191)	0.88	0.83	0.76	1.00		1.00	0.63	0.61	0.59	0.68	0.56	0.41	1.00		0.83	0.72	0.67	n/a
	8	(203)	0.91	0.86	0.78	1.00			0.64	0.62	0.60	0.75	0.62	0.46	1.00		0.91	0.74	0.70	0.63
	9	(229)	0.96	0.90	0.82				0.65	0.64	0.61	0.89	0.74	0.54			1.00	0.79	0.74	0.67
	10	(254)	1.00	0.94	0.85				0.67	0.65	0.62	1.00	0.87	0.64				0.83	0.78	0.70
	11	(279)	1.00	0.99	0.89				0.69	0.67	0.64		1.00	0.74				0.87	0.82	0.74
	12	(305)		1.00	0.92				0.71	0.68	0.65			0.84				0.91	0.85	0.77
	16	(406)			1.00				0.77	0.74	0.70			1.00				1.00	0.98	0.89
	18	(457)							0.81	0.77	0.72								1.00	0.94
	24	(610)							0.91	0.86	0.80									1.00
	> 36	(914)							1.00	1.00	0.94									

1 Linear interpolation not permitted
2 When combining multiple load adjustment factors (e.g. for a 4 anchor pattern in a corner with thin concrete member) the design can become very conservative. To optimize the design, use Hilti PROFIS Engineering Design software or perform anchor calculation using design equations from ACI 318 Ch. 17 or CSA A23.3 Annex D.
3 Spacing factor reduction in shear, f_{AV}, is applicable when edge distance $c < 3h_{ef}$. If $c \geq 3h_{ef}$ then $f_{AV} = f_{AN}$.
4 Concrete thickness reduction factor in shear, f_{HV}, is applicable when edge distance $c < 3h_{ef}$. If $c \geq 3h_{ef}$ then $f_{HV} = 1.0$.

If a reduction factor value is in a shaded cell, this indicates that this specific edge distance may not be permitted with a certain spacing (or vice versa). Check with Figure 3 and Table 21 to calculate permissible edge distance, spacing and concrete thickness combinations.

Table 32 — Load adjustment factors for Stainless Steel 1-in. diameter KB-TZ2 in uncracked concrete [1,4]

1-in. KB-TZ2 uncracked concrete		Spacing factor in tension f_{AN}		Edge distance factor in tension f_{RN}		Spacing factor in shear [3] f_{AV}		Edge distance in shear ⊥ Toward edge f_{RV}		Edge distance in shear ∥ To edge f_{RV}		Concrete thickness factor in shear [4] f_{HV}	
Effective Embedment h_{ef}	in.	4.00	5.75	4.00	5.75	4.00	5.75	4.00	5.75	4.00	5.75	4.00	5.75
	(mm)	(102)	(146)	(102)	(146)	(102)	(146)	(102)	(146)	(102)	(146)	(102)	(146)
Nominal Embedment h_{nom}	in.	4-5/8	6-3/8	4-5/8	6-3/8	4-5/8	6-3/8	4-5/8	6-3/8	4-5/8	6-3/8	4-5/8	6-3/8
	(mm)	(117)	(162)	(117)	(162)	(117)	(162)	(117)	(162)	(117)	(162)	(117)	(162)
Spacing (s) / Edge Distance (c_a) / Concrete Thickness (h) - in. (mm)													
3	(76)	n/a	n/a	n/a	0.302	n/a	n/a	n/a	0.085	n/a	0.170	n/a	n/a
3-3/4	(95)	n/a	n/a	0.393	0.332	n/a	n/a	0.199	0.119	0.393	0.238	n/a	n/a
4	(102)	n/a	n/a	0.409	0.342	n/a	n/a	0.219	0.131	0.409	0.262	n/a	n/a
4-1/4	(108)	n/a	n/a	0.425	0.352	n/a	n/a	0.240	0.144	0.425	0.287	n/a	n/a
4-3/4	(121)	n/a	0.638	0.458	0.373	n/a	0.551	0.284	0.170	0.458	0.339	n/a	n/a
5	(127)	0.708	0.645	0.475	0.384	0.576	0.554	0.306	0.183	0.475	0.366	n/a	n/a
6	(152)	0.750	0.674	0.545	0.429	0.591	0.565	0.403	0.241	0.545	0.429	n/a	n/a
6-3/4	(171)	0.781	0.696	0.614	0.464	0.602	0.573	0.481	0.287	0.614	0.464	n/a	n/a
8	(203)	0.833	0.732	0.727	0.525	0.621	0.586	0.620	0.371	0.727	0.525	0.696	n/a
10	(254)	0.917	0.790	0.909	0.645	0.652	0.608	0.867	0.518	0.909	0.645	0.778	0.656
12	(305)	1.000	0.848	1.000	0.774	0.682	0.629	1.000	0.681	1.000	0.774	0.853	0.718
18	(457)		1.000		1.000	0.773	0.694		1.000		1.000	1.000	0.880
24	(610)					0.864	0.758						1.000
36	(914)					1.000	0.887						
> 48	(1219)						1.000						

Table 33 — Load adjustment factors for Stainless Steel 1-in. diameter KB-TZ2 in cracked concrete [1,4]

1-in. KB-TZ2 cracked concrete		Spacing factor in tension f_{AN}		Edge distance factor in tension f_{RN}		Spacing factor in shear [3] f_{AV}		Edge distance in shear ⊥ Toward edge f_{RV}		Edge distance in shear ∥ To edge f_{RV}		Concrete thickness factor in shear [4] f_{HV}	
Effective Embedment h_{ef}	in.	4.00	5.75	4.00	5.75	4.00	5.75	4.00	5.75	4.00	5.75	4.00	5.75
	(mm)	(102)	(146)	(102)	(146)	(102)	(146)	(102)	(146)	(102)	(146)	(102)	(146)
Nominal Embedment h_{nom}	in.	4-5/8	6-3/8	4-5/8	6-3/8	4-5/8	6-3/8	4-5/8	6-3/8	4-5/8	6-3/8	4-5/8	6-3/8
	(mm)	(117)	(162)	(117)	(162)	(117)	(162)	(117)	(162)	(117)	(162)	(117)	(162)
Spacing (s) / Edge Distance (c_a) / Concrete Thickness (h) - in. (mm)													
3	(76)	n/a	n/a	n/a	0.542	n/a	n/a	n/a	0.081	n/a	0.162	n/a	n/a
3-3/4	(95)	n/a	n/a	0.721	0.596	n/a	n/a	0.170	0.113	0.340	0.226	n/a	n/a
4	(102)	n/a	n/a	0.750	0.614	n/a	n/a	0.188	0.124	0.375	0.249	n/a	n/a
4-1/4	(108)	n/a	n/a	0.779	0.633	n/a	n/a	0.205	0.136	0.411	0.272	n/a	n/a
4-3/4	(121)	n/a	0.638	0.840	0.671	n/a	0.549	0.243	0.161	0.485	0.322	n/a	n/a
5	(127)	0.708	0.645	0.871	0.690	0.568	0.552	0.262	0.174	0.524	0.348	n/a	n/a
6	(152)	0.750	0.674	1.000	0.770	0.582	0.562	0.344	0.228	0.689	0.457	n/a	n/a
6-3/4	(171)	0.781	0.696		0.833	0.592	0.570	0.411	0.273	0.822	0.545	n/a	n/a
8	(203)	0.833	0.732		0.943	0.609	0.583	0.530	0.352	1.000	0.703	0.661	n/a
10	(254)	0.917	0.790		1.000	0.636	0.604	0.741	0.491		0.983	0.739	0.644
12	(305)	1.000	0.848			0.664	0.625	0.974	0.646		1.000	0.809	0.706
18	(457)		1.000			0.746	0.687	1.000	1.000			0.991	0.864
24	(610)					0.828	0.749					1.000	0.998
36	(914)					0.991	0.874						1.000
> 48	(1219)					1.000	0.998						

1 Linear interpolation not permitted
2 When combining multiple load adjustment factors (e.g. for a 4 anchor pattern in a corner with thin concrete member) the design can become very conservative. To optimize the design, use Hilti PROFIS Engineering Design software or perform anchor calculation using design equations from ACI 318 Ch. 17 or CSA A23.3 Annex D.
3 Spacing factor reduction in shear, f_{AV}, is applicable when edge distance $c < 3h_{ef}$. If $c \geq 3h_{ef}$ then $f_{AV} = f_{AN}$.
4 Concrete thickness reduction factor in shear, f_{HV}, is applicable when edge distance $c < 3h_{ef}$. If $c \geq 3h_{ef}$ then $f_{HV} = 1.0$.

If a reduction factor value is in a shaded cell, this indicates that this specific edge distance may not be permitted with a certain spacing (or vice versa). Check with Figure 3 and Table 21 to calculate permissible edge distance, spacing and concrete thickness combinations.

Table 34 — Hilti Carbon Steel KB-TZ2 in the soffit of uncracked lightweight concrete over metal deck, applicable for both hammer and core drilled installations [1,2,3,4,5,6]

Nominal anchor diameter in.	Effective embedment in. (mm)	Nominal embedment in. (mm)	Installation per Figure 4				Installation per Figure 5			
			Min. conc. thickness [8] in. (mm)	Tension - ΦN_n		Shear - ΦV_n	Min. conc. thickness [8] in. (mm)	Tension - ΦN_n		Shear - ΦV_n
				f'_c = 3,000 psi (20.7 MPa) lb (kN)	f'_c = 4,000 psi (27.6 MPa) lb (kN)	f'_c = 3,000 psi (20.7 MPa) lb (kN)		f'_c = 3,000 psi (20.7 MPa) lb (kN)	f'_c = 4,000 psi (27.6 MPa) lb (kN)	f'_c = 3,000 psi (20.7 MPa) lb (kN)
1/4	1-1/2 (38)	1-3/4 (44)	2-1/2 (64)	775 (3.4)	820 (3.6)	1,060 (4.7)	2-1/4 (57)	620 (2.8)	655 (2.9)	730 (3.2)
3/8	1-1/2 (38)	1-7/8 (48)	2-1/2 (64)	1,205 (5.4)	1,285 (5.7)	880 (3.9)	2-1/4 (57)	645 (2.9)	685 (3.0)	1,540 (6.9)
	2 (51)	2-1/2 (64)	2-1/2 (64)	1,705 (7.6)	1,830 (8.1)	1,380 (6.1)	2-1/4 (57)	1,615 (7.2)	1,730 (7.7)	1,630 (7.3)
	2-1/2 (64)	3 (76)	2-1/2 (64)	1,945 (8.7)	2,155 (9.6)	1,380 (6.1)	N/A	N/A	N/A	N/A
1/2	1-1/2 (38)	2 (51)	2-1/2 (64)	1,205 (5.4)	1,390 (6.2)	1,165 (5.2)	2-1/4 (57)	1,180 (5.2)	1,365 (6.1)	1,740 (7.7)
	2 (51)	2-1/2 (64)	2-1/2 (64)	1,790 (8.0)	2,015 (9.0)	1,470 (6.5)	2-1/4 (57)	1,235 (5.5)	1,395 (6.2)	2,065 (9.2)
	2-1/2 (64)	3 (76)	2-1/2 (64)	2,435 (10.8)	2,645 (11.8)	2,135 (9.5)	N/A	N/A	N/A	N/A
	3-1/4 (83)	3-3/4 (95)	2-1/2 (64)	3,065 (13.6)	3,390 (15.1)	2,755 (12.3)	3-1/4 (83)	1,730 (7.7)	1,915 (8.5)	2,250 (10.0)
5/8	2-3/4 (70)	3-1/4 (83)	2-1/2 (64)	2,870 (12.8)	3,315 (14.7)	2,480 (11.0)	3-1/4 (83)	1,925 (8.6)	2,225 (9.9)	2,655 (11.8)
	4 (102)	4-1/2 (114)	2-1/2 (64)	3,780 (16.8)	4,365 (19.4)	3,025 (13.5)	N/A	N/A	N/A	N/A
3/4	3-1/4 (83)	4 (102)	2-1/2 (64)	2,470 (11.0)	2,730 (12.1)	2,655 (11.8)	N/A	N/A	N/A	N/A
	3-3/4[9] (95)	4-1/2 (114)	3-1/4 (83)	3,115 (13.9)	3,405 (15.1)	5,110 (22.7)	N/A	N/A	N/A	N/A

Table 35 — Hilti Carbon Steel KB-TZ2 in the soffit of cracked lightweight concrete over metal deck, applicable for both hammer and core drilled installations [1,2,3,4,5,6,7]

Nominal anchor diameter in.	Effective embedment in. (mm)	Nominal embedment in. (mm)	Installation per Figure 4				Installation per Figure 5			
			Min. conc. thickness [8] in. (mm)	Tension - ΦN_n		Shear - ΦV_n	Min. conc. thickness [8] in. (mm)	Tension - ΦN_n		Shear - ΦV_n
				f'_c = 3,000 psi (20.7 MPa) lb (kN)	f'_c = 4,000 psi (27.6 MPa) lb (kN)	f'_c = 3,000 psi (20.7 MPa) lb (kN)		f'_c = 3,000 psi (20.7 MPa) lb (kN)	f'_c = 4,000 psi (27.6 MPa) lb (kN)	f'_c = 3,000 psi (20.7 MPa) lb (kN)
1/4	1-1/2 (38)	1-3/4 (44)	2-1/2 (64)	230 (1.0)	260 (1.2)	1,060 (4.7)	2-1/4 (57)	185 (0.8)	205 (0.9)	730 (3.2)
3/8	1-1/2 (38)	1-7/8 (48)	2-1/2 (64)	1,055 (4.7)	1,220 (5.4)	880 (3.9)	2-1/4 (57)	565 (2.5)	650 (2.9)	1,540 (6.9)
	2 (51)	2-1/2 (64)	2-1/2 (64)	1,490 (6.6)	1.705 (7.6)	1,380 (6.1)	2-1/4 (57)	1,385 (6.2)	1,580 (7.0)	1,630 (7.3)
	2-1/2 (64)	3 (76)	2-1/2 (64)	1,565 (7.0)	1.695 (7.5)	1,380 (6.1)	N/A	N/A	N/A	N/A
1/2	1-1/2 (38)	2 (51)	2-1/2 (64)	1,075 (4.8)	1.230 (5.5)	1,165 (5.2)	2-1/4 (57)	960 (4.3)	1,100 (4.9)	1,740 (7.7)
	2 (51)	2-1/2 (64)	2-1/2 (64)	1,390 (6.2)	1.600 (7.1)	1,470 (6.5)	2-1/4 (57)	960 (4.3)	1,110 (4.9)	2,065 (9.2)
	2-1/2 (64)	3 (76)	2-1/2 (64)	2,130 (9.5)	2,435 (10.9)	2,135 (9.5)	N/A	N/A	N/A	N/A
	3-1/4 (83)	3-3/4 (95)	2-1/2 (64)	2,170 (9.7)	2,435 (10.8)	2,755 (12.3)	3-1/4 (83)	1,230 (5.5)	1,380 (6.1)	2,250 (10.0)
5/8	2-3/4 (70)	3-1/4 (83)	2-1/2 (64)	2,555 (11.4)	2,950 (13.1)	2,480 (11.0)	3-1/4 (83)	1,715 (7.6)	1,980 (8.8)	2,655 (11.8)
	4 (102)	4-1/2 (114)	2-1/2 (64)	2,855 (12.7)	3,300 (14.7)	3,025 (13.5)	N/A	N/A	N/A	N/A
3/4	3-1/4 (83)	4 (102)	2-1/2 (64)	2,160 (9.6)	2,395 (10.7)	2,655 (11.8)	N/A	N/A	N/A	N/A
	3-3/4 (95)	4-1/2 (114)	3-1/4 (83)	2,425 (10.8)	2,735 (12.2)	5,110 (22.7)	N/A	N/A	N/A	N/A

1 See Section 3.1.8 to convert design strength value to ASD value.
2 Linear interpolation between embedment depths and concrete compressive strengths is not permitted.
3 Tabular value is for one anchor per flute. Minimum spacing along the length of the flute is 3 x h_{ef} (effective embedment).
4 Tabular values are lightweight concrete and no additional reduction factor is needed.
5 No additional reduction factors for spacing or edge distance need to be applied.
6 Comparison of the tabular values to the steel strength is not necessary. Tabular values control.
7 Tabular values are for static loads only. Seismic design is not permitted for uncracked concrete. For seismic tension loads, multiply cracked concrete tabular values in tension only by $\alpha_{N,seis}$ = 0.75, except for 3/4 x 4-3/4 h_{ef} where $\alpha_{N,seis}$ = 0.73. See Section 3.1.8 for additional information on seismic applications.
8 Minimum concrete thickness over the upper flute when anchor is installed in the lower flute. See Figure 4 and 5.
9 For core drilled installations of 3/4" anchors installed at 3-3/4" effective embedment, apply a reduction factor of 0.89 to the design tension strength of anchors installed in uncracked concrete.

Figure 4 — Installation of Hilti KB-TZ2 carbon steel in the soffit of concrete over metal deck floor and roof assemblies – W deck[2]

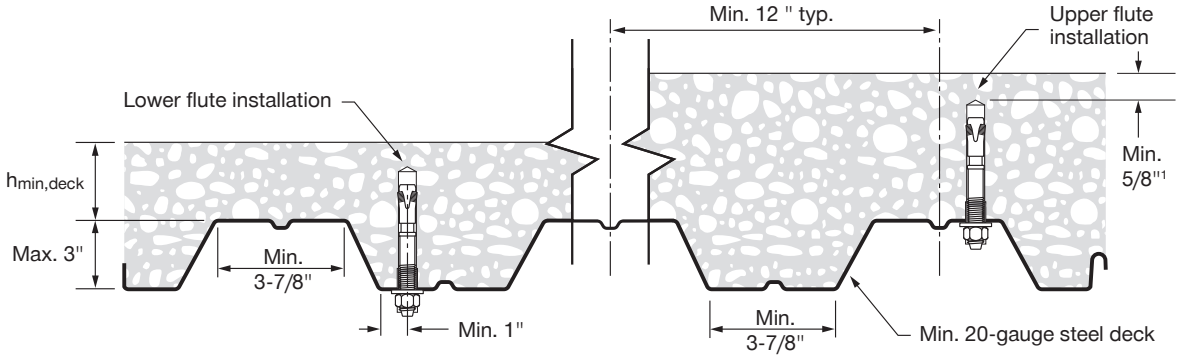

Figure 5 — Installation of Hilti KB-TZ2 carbon steel in the soffit of concrete over metal deck floor and roof assemblies – B deck

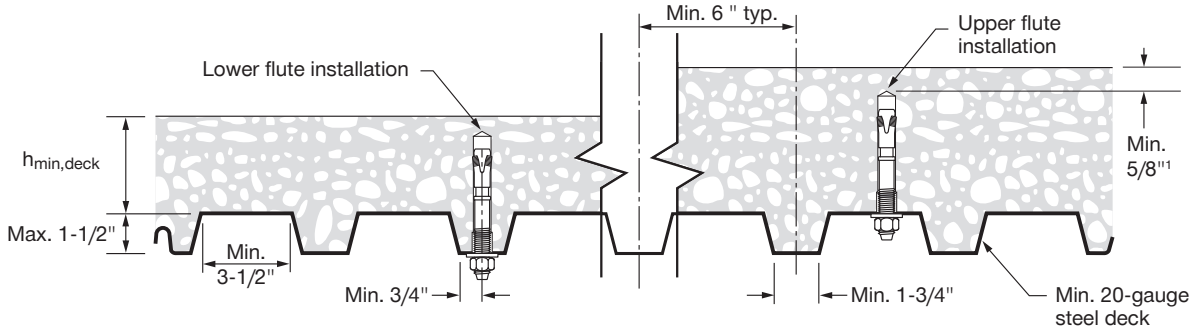

1 5/8" clearance between the bottom of the drilled hole and the concrete surface is only applicable for upper flute installations. Refer to Tables 34 and 35 for minimum concrete thicknesses for installations into the lower flute.
2 For flute widths greater or equal to 4-1/2", the shear strength may be increased. Refer to ESR-4266 for more information.

Table 36 — Hilti KB-TZ2 carbon steel anchors setting information for installation on the top of concrete-filled profile steel deck asseblies according to figure 6 [1,2,3]

Design information	Symbol	Units	Nominal anchor diameter (in)			
			1/4	3/8		1/2
Effective minimum embedment	h_{ef}	in.	1-1/2	1-1/2	2	2
Nominal minimum embedment	h_{nom}	in.	1-3/4	1-7/8	2-1/2	2-1/2
Minimum hole depth	h_0	in.	2	2	2-1/2	2-3/4
Minimum concrete thickness [4]	$h_{min,deck}$	in.	2-1/2	2-1/2	2-1/2	3-2/4
Critical edge distance	$c_{ac,deck,top}$	in.	5	8	4-1/2	6
Minimum edge distance	$c_{min,deck,top}$	in.	3	16		7-1/2
Minimum spacing	$s_{min,deck,top}$	in.	3	8		9
Required installation torque	T_{inst}	ft-lb	4	30		50

1 Installation must comply with Figure 6 of this report.
2 Design capacity shall be based on calculations according to values in Tables 2 and 3 of this report.
3 Applicable for $h_{min,deck}$ < 4-in. For $h_{min,deck}$ ≥ 4-in, use setting information in Tables 1 and 5 of this section.
4 Minimun concrete thickness refers to concrete thickness above the upper flute. See Figure 6.

Figure 6 — KB-TZ2 Installation in the top of concrete filled profile steel deck assemblies

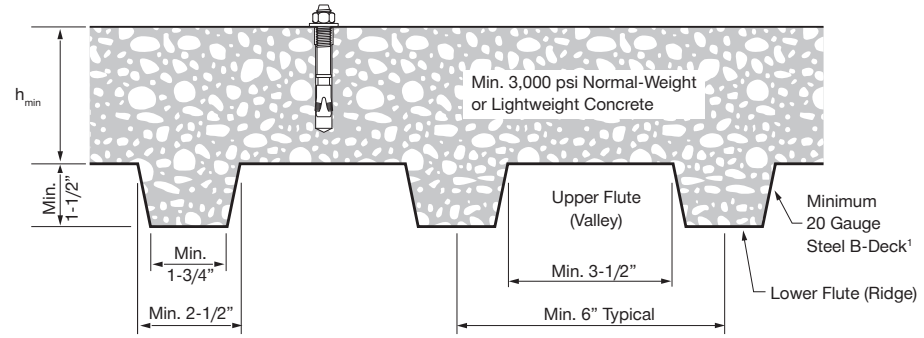

1 1-1/2-in B-deck as a minimum profile size. Other deck profiles meeting the B-deck minimum dimensions are also permitted

DESIGN DATA IN CONCRETE PER CSA A23.3

CSA A23.3 Annex D Design

Limit State Design of anchors is described in the provisions of CSA A23.3 Annex D for post-installed anchors tested and assessed in accordance with ACI 355.2 for mechanical anchors and ACI 355.4 for adhesive anchors. Tables 37, 38, 42 and 43 in this section contains the Limit State Design tables that are based on the published loads in ICC-ES Evaluation Report ESR 4266 and converted for use with CSA A23.3 Annex D. Tables 40, 41, 45 and 46 are Hilti Simplified Design Tables which are pre-factored resistance tables based on the design parameters and variables in Tables 37, 38, 42 and 43. All the figures in the previous ACI 318 Chapter 17 design section are applicable to Limit State Design and the tables will reference these figures.

For a detailed explanation of the tables developed in accordance with CSA A23.3 Annex D, refer to Section 3.1.8. Technical assistance is available by contacting Hilti Canada at (800) 363 4458 or at www.hilti.ca.

Table 37 — Hilti KB-TZ2 carbon steel tension design information in accordance with CSA A23.3 Annex D, applicable for both hammer and core drilled installations[1]

Design parameter	Symbol	Units	Nominal anchor diameter (in.)																Ref
			1/4	3/8			1/2				5/8			3/4			1		A23.3
Effective min. embedment [2]	h_{ef}	in. (mm)	1-1/2 (38)	1-1/2 (38)	2 (51)	2-1/2 (64)	1-1/2 (38)	2 (51)	2-1/2 (64)	3-1/4 (83)	2-3/4 (70)	3-1/4 (83)	4 (102)	3-1/4 (83)	3-3/4 (95)	4-3/4 (121)	4 (102)	5-3/4 (146)	
Min. concrete thickness	h_{min}	in. (mm)	See Table 5																
Minimum edge distance	c_{min}	in. (mm)	See Table 5																
Minimum anchor spacing	s_{min}	in. (mm)	See Table 5																
Tension, steel failure modes																			
Steel embed. material resistance factor for reinforcement	Φ_s	-	0.85	0.85			0.85				0.85			0.85			0.85		8.4.3
Resistance modification factor for tension, steel failure modes[3]	R	-	0.80	0.80			0.80				0.80			0.80			0.80		D.5.3
Min. specified yield strength	f_{ya}	psi (N/mm²)	100,900 (696)	100,900 (696)			96,300 (664)				87,000 (600)			84,700 (584)			75,000 (517)		
Min. specified ult. strength	f_{ut}	psi (N/mm²)	122,400 (844)	126,200 (870)			114,000 (786)				106,700 (736)			105,900 (730)			88,000 (607)		
Effective tensile stress area	$A_{se,N}$	in² (mm²)	0.024 (15.4)	0.051 (33.2)			0.099 (63.6)				0.164 (106.0)			0.239 (154.4)			0.470 (303.2)		
Factored steel resistance in tension	N_{sar}	lb (kN)	1,985 (8.8)	4,420 (19.7)			7,645 (34.0)				11,925 (53.0)			17,230 (76.6)			28,145 (125.2)		D.6.1.2
Tension, concrete failure modes																			
Anchor category	-	-	3	1			1				1			1			1		D.5.3 (c)
Concrete material resistance factor	Φ_c	-	0.65	0.65			0.65				0.65			0.65			0.65		8.4.2
Resistance modification factor for tension and shear, concrete failure modes, Condition B [5]	R	-	0.75	1.00			1.00				1.00			1.00			1.00		D.5.3 (c)
Coeff. for factored conc. breakout resistance, uncracked concrete	$k_{c,uncr}$	-	10.0	10.0	10.0	10.0	11.3	11.3	10.0	10.0	10.0	10.0	10.0	11.3	11.3[7]	10.0	11.3	10.0	D.6.2.2
Coeff. for factored conc. breakout resistance, cracked concrete	$k_{c,cr}$	-	7.1	8.8	8.8	7.1	10.0	8.8	8.8	7.1	8.8	8.8	7.1	8.8	8.8	8.8	8.8	8.8	D.6.2.2
Modification factor for anchor resistance, tension, uncracked conc. [4]	$\Psi_{c,N}$	-	1.0	1.0			1.0				1.0			1.0			1.0		
Critical edge distance	c_{ac}	in. (mm)	4 (102)	5 (127)	4-3/8 (111)	5-1/2 (140)	8 (203)	5-1/2 (140)	6-3/4 (171)	10 (254)	10 (254)	11-1/2 (292)	8-3/4 (222)	12 (305)	10 (254)	9 (229)	11 (279)	16 (406)	
Factored pullout resistance in 20 MPa uncracked concrete [6]	$N_{pr,uncr}$	lb (kN)	1,055 (4.7)	N/A	N/A	2,865 (12.7)	N/A	N/A	N/A	N/A	3,770 (16.8)	N/A	6,300 (28.0	N/A	N/A	N/A	N/A	N/A	D.6.3.2
Factored pullout resistance in 20 MPa cracked concrete [6]	$N_{pr,cr}$	lb (kN)	325 (1.4)	N/A	N/A	N/A	N/A	N/A	N/A	N/A	N/A	N/A	N/A	N/A	N/A	6,000 (26.7)	N/A	8,275 (36.8)	D.6.3.2
Factored pullout resistance in 20 MPa cracked concrete, seismic [6]	$N_{pr,eq}$	lb (kN)	325 (1.4)	N/A	N/A	N/A	N/A	N/A	N/A	N/A	N/A	N/A	N/A	N/A	N/A	5,880 (26.1)	N/A	8,275 (36.8)	D.6.3.2
Normalization factor, uncracked concrete	n_{uncr}	-	0.20	0.22	0.24	0.35	0.50	0.42	0.29	0.35	0.50	0.48	0.50	0.35	0.31	0.39	N/A	0.38	
Normalization factor, cracked concrete, seismic	n_{cr}	-	0.39	0.50	0.46	0.28	0.47	0.50	0.48	0.40	0.50	0.47	0.50	0.36	0.42	0.29	N/A	0.50	

1 Design information in this table is taken from ICC-ES ESR-4266, dated December, 2020, and revised July, 2021 Tables 4 and 6, and converted for use with CSA A23.3 Annex D.
2 See Figure 1 of this document.
3 The KB-TZ2 carbon steel anchor is considered a ductile steel element as defined by CSA A23.3 Annex D section D.2.
4 For all design cases, $\Psi_{c,N}$ = 1.0. The appropriate coefficient for breakout resistance for cracked concrete ($k_{c,cr}$) or uncracked concrete ($k_{c,uncr}$) must be used.
5 For use with the load combinations of CSA A23.3 chapter 8. Condition B applies where supplementary reinforcement in conformance with CSA A23.3 section D.5.3 is not provided, or where pullout or pryout strength governs. For cases where the presence of supplementary reinforcement can be verified, the resistance modification factors associated with Condition A may be used.
6 For all design cases, $\Psi_{c,P}$ = 1.0. Tabular value for pullout strength is for a concrete compressive strength of 2,900 psi (20.0 M Pa). Pullout strength for concrete compressive strength greater than 2,900 psi (20.2 MPa) may be increased by multiplying the tabular pullout strength by $(f'_c / 2{,}900)^n$ for psi, or $(f'_c / 20.2)^n$ for MPa,
7 For core drilled installation $k_{c,uncr}$ = 10.0 for 3/4" diameter installed at 3-3/4" effective embedment.

Table 38 — Hilti KB-TZ2 carbon steel shear design information in accordance with CSA A23.3 Annex D, applicable for both hammer and core drilled installations [1]

Design parameter	Symbol	Units	Nominal anchor diameter (in.)																Ref
			1/4	3/8			1/2				5/8			3/4			1		A23.3
Anchor O.D.	d_a	in.	0.25	0.375			0.5				0.625			0.75			1.00		
		(mm)	(6.4)	(9.5)			(12.7)				(15.9)			(19.1)			(25.4)		
Effective min. embedment [2]	h_{ef}	in.	1-1/2	1-1/2	2	2-1/2	1-1/2	2	2-1/2	3-1/4	2-3/4	3-1/4	4	3-1/4	3-3/4	4-3/4	4	5-3/4	
		(mm)	(38)	(38)	(51)	(64)	(38)	(51)	(64)	(83)	(70)	(83)	(102)	(83)	(95)	(121)	(102)	(146)	
Shear, steel failure modes																			
Steel embed. material resistance factor for reinforcement	Φ_s	-	0.85	0.85			0.85				0.85			0.85			0.85		8.4.3
Resistance modification factor for shear, steel failure modes [3]	R	-	0.75	0.75			0.75				0.75			0.75			0.75		D.5.3
Factored steel resistance in shear	V_{sar}	lb	855	2,055			3,530				6,540			8,800			11,980	14,550	D.7.1.2
		(kN)	(3.8)	(9.1)			(15.7)				(29.1)			(39.1)			(53.3)	(64.7)	
Factored steel resistance in shear, seismic	$V_{sar,eq}$	lb	855	2,055			3,530				6,540			8,800			8,800		
		(kN)	(3.8)	(9.1)			(15.7)				(29.1)			(39.1)			(39.1)		
Shear, concrete failure modes																			
Concrete material resistance factor	Φ_c	-	0.65	0.65			0.65				0.65			0.65			0.65		8.4.2
Resistance modification factor for shear, concrete failure modes [4]	R	-	1.00	1.00			1.00				1.00			1.00			1.00		D.5.3
Load bearing length of anchor in shear	ℓ_e	in.	1-1/2	1-1/2	2	2-1/2	1-1/2	2	2-1/2	3-1/4	2-3/4	3-1/4	4	3-1/4	3-3/4	4-3/4	4	5-3/4	
		(mm)	(38)	(38)	(51)	(64)	(38)	(51)	(64)	(83)	(70)	(83)	(102)	(83)	(95)	(121)	(102)	(146)	
Effectiveness factor for pryout	k_{cp}	-	1.0	1.0	1.0	2.0	1.0	1.0	2.0	2.0	2.0	2.0	2.0	2.0	2.0	2.0	2.0	2.0	

1 Design information in this table is taken from ICC-ES ESR-4266, dated December, 2020, and revised July, 2021 Tables 4 and 6, and converted for use with CSA A23.3 Annex D.
2 See Figure 1 of this document.
3 The KB-TZ2 carbon steel anchor is considered a ductile steel element as defined by CSA A23.3 Annex D section D.2.
4 For use with the load combinations of CSA A23.3 chapter 8. Condition B applies where supplementary reinforcement in conformance with CSA A23.3 section D.5.3 is not provided, or where pullout or pryout strength governs. For cases where the presence of supplementary reinforcement can be verified, the resistance modification factors associated with Condition A may be used.

Table 39 — Steel resistance for Hilti KB-TZ2 carbon steel anchors [1,2]

Nominal anchor diameter in.	Effective embedment depth in. (mm)			Tensile [3] ΦN_{sar} lb (kN)	Shear [4] ΦV_{sar} lb (kN)	Seismic Shear [5] $\Phi V_{sar,eq}$ lb (kN)
1/4	1-1/2 (38)			1,985 (8.8)	855 (3.8)	855 (3.8)
3/8	1-1/2 (38)			4,420 (19.7)	2,055 (9.1)	2,055 (9.1)
3/8	2 (51)	2-1/2 (64)		4,420 (19.7)	2,160 (9.6)	2,160 (9.6)
1/2	1-1/2 (38)	2 (51)		7,645 (34.0)	3,530 (15.7)	3,530 (15.7)
1/2	2-1/2 (64)	3-1/4 (83)		7,645 (34.0)	4,385 (19.5)	4,385 (19.5)
5/8	2-3/4 (70)	3-1/4 (83)	4 (102)	11,925 (53.0)	6,540 (29.1)	6,540 (29.1)
3/4	3-1/4 (83)	3-3/4 (95)	4-3/4 (121)	17,230 (76.6)	8,800 (39.1)	8,800 (39.1)
1	4 (102)			28,145 (125.2)	11,980 (53.3)	8,800 (39.1)
1	5-3/4 (146)			28,145 (125.2)	14,550 (64.7)	8,800 (39.1)

1 See Section 3.1.8 to convert factored resistance value to ASD value.
2 Hilti KB-TZ2 carbon steel anchors are to be considered ductile steel elements.
3 Tensile $N_{sar} = A_{se,N}\ \Phi_s\ f_{uta}$ R as noted in CSA A23.3 Annex D.
4 Shear determined by static shear tests with $V_{sar} < 0.6\ A_{se,V}\ \Phi_s\ f_{ut}$a R as noted in CSA A23.3 Annex D.
5 Seismic shear values determined by seismic shear tests with $V_{sar,eq} \leq 0.60\ A_{se,V}\ \Phi_s\ f_{uta}$ R as noted in CSA A23.3 Annex D.
See Section 3.1.8 for additional information on seismic applications.

Table 40 — Hilti KB-TZ2 carbon steel factored resistance based on concrete failure modes in uncracked concrete, applicable for both hammer and core drilled installations [1,2,3,4]

Nominal anchor diameter in.	Effective embedment in. (mm)	Nominal embedment in. (mm)	Tension - N_r				Shear - V_r			
			f'_c = 20 MPa (2,900 psi) lb (kN)	f'_c = 25 MPa (3,625 psi) lb (kN)	f'_c = 30 MPa (4,350 psi) lb (kN)	f'_c = 40 MPa (5,800 psi) lb (kN)	f'_c = 20 MPa (2,900 psi) lb (kN)	f'_c = 25 MPa (3,625 psi) lb (kN)	f'_c = 30 MPa (4,350 psi) lb (kN)	f'_c = 40 MPa (5,800 psi) lb (kN)
1/4	1 1/2 (38)	1 3/4 (44)	1,055 (4.7)	1,105 (4.9)	1,145 (5.1)	1,210 (5.4)	1,535 (6.8)	1,720 (7.6)	1,880 (8.4)	2,175 (9.7)
3/8	1 1/2 (38)	1 7/8 (48)	1,535 (6.8)	1,720 (7.6)	1,880 (8.4)	2,175 (9.7)	1,535 (6.8)	1,720 (7.6)	1,880 (8.4)	2,175 (9.7)
	2 (51)	2 1/2 (64)	2,365 (10.5)	2,645 (11.8)	2,900 (12.9)	3,345 (14.9)	2,365 (10.5)	2,645 (11.8)	2,900 (12.9)	3,345 (14.9)
	2 1/2 (64)	3 (76)	2,865 (12.7)	3,095 (13.8)	3,300 (14.7)	3,650 (16.2)	3,305 (14.7)	3,695 (16.4)	4,050 (18.0)	4,675 (20.8)
1/2	1 1/2 (38)	2 (51)	1,735 (7.7)	1,940 (8.6)	2,125 (9.5)	2,455 (10.9)	1,735 (7.7)	1,940 (8.6)	2,125 (9.5)	2,455 (10.9)
	2 (51)	2 1/2 (64)	2,675 (11.9)	2,990 (13.3)	3,275 (14.6)	3,780 (16.8)	2,675 (11.9)	2,990 (13.3)	3,275 (14.6)	3,780 (16.8)
	2 1/2 (64)	3 (76)	3,305 (14.7)	3,695 (16.4)	4,050 (18.0)	4,675 (20.8)	3,305 (14.7)	3,695 (16.4)	4,050 (18.0)	4,675 (20.8)
	3 1/4 (83)	3 3/4 (95)	4,900 (21.8)	5,480 (24.4)	6,005 (26.7)	6,930 (30.8)	9,805 (43.6)	10,960 (48.8)	12,005 (53.4)	13,865 (61.7)
5/8	2 3/4 (70)	3 1/4 (83)	3,770 (16.8)	4,215 (18.7)	4,615 (20.5)	5,330 (23.7)	7,630 (33.9)	8,530 (37.9)	9,345 (41.6)	10,790 (48.0)
	3 1/4 (83)	3 3/4 (95)	4,900 (21.8)	5,480 (24.4)	6,005 (26.7)	6,930 (30.8)	9,805 (43.6)	10,960 (48.8)	12,005 (53.4)	13,865 (61.7)
	4 (102)	4 1/2 (114)	6,300 (28.0)	7,045 (31.3)	7,720 (34.3)	8,910 (39.6)	13,385 (59.5)	14,965 (66.6)	16,395 (72.9)	18,930 (84.2)
3/4	3 1/4 (83)	4 (102)	4,900 (21.8)	5,480 (24.4)	6,005 (26.7)	6,930 (30.8)	9,805 (43.6)	10,960 (48.8)	12,005 (53.4)	13,865 (61.7)
	3 3/4[6] (95)	4 1/2 (114)	6,865 (30.5)	7,675 (34.1)	8,405 (37.4)	9,710 (43.2)	13,730 (61.1)	15,350 (68.3)	16,815 (74.8)	19,415 (86.4)
	4 3/4 (121)	5 1/2 (140)	8,660 (38.5)	9,685 (43.1)	10,605 (47.2)	12,250 (54.5)	17,320 (77.0)	19,365 (86.1)	21,215 (94.4)	24,495 (109.0)
1	4 (102)	4 5/8 (117)	7,560 (33.6)	8,455 (37.6)	9,260 (41.2)	10,695 (47.6)	15,125 (67.3)	16,910 (75.2)	18,525 (82.4)	21,390 (95.1)
	5 3/4 (146)	6 3/8 (162)	11,535 (51.3)	12,895 (57.4)	14,125 (62.8)	16,310 (72.6)	23,070 (102.6)	25,790 (114.7)	28,255 (125.7)	32,625 (145.1)

Table 41 — Hilti KB-TZ2 carbon steel factored resistance based on concrete failure modes in cracked concrete, applicable for both hammer and core drilled installations [1,2,3,4,5]

Nominal anchor diameter in.	Effective embedment in. (mm)	Nominal embedment in. (mm)	Tension - N_r				Shear - V_r			
			f'_c = 20 MPa (2,900 psi) lb (kN)	f'_c = 25 MPa (3,625 psi) lb (kN)	f'_c = 30 MPa (4,350 psi) lb (kN)	f'_c = 40 MPa (5,800 psi) lb (kN)	f'_c = 20 MPa (2,900 psi) lb (kN)	f'_c = 25 MPa (3,625 psi) lb (kN)	f'_c = 30 MPa (4,350 psi) lb (kN)	f'_c = 40 MPa (5,800 psi) lb (kN)
1/4	1 1/2 (38)	1 3/4 (44)	325 (1.4)	350 (1.6)	380 (1.7)	425 (1.9)	1,090 (4.9)	1,220 (5.4)	1,335 (5.9)	1,545 (6.9)
3/8	1 1/2 (38)	1 7/8 (48)	1,350 (6.0)	1,510 (6.7)	1,655 (7.4)	1,915 (8.5)	1,350 (6.0)	1,510 (6.7)	1,655 (7.4)	1,915 (8.5)
	2 (51)	2 1/2 (64)	2,080 (9.3)	2,330 (10.4)	2,550 (11.3)	2,945 (13.1)	2,080 (9.3)	2,330 (10.4)	2,550 (11.3)	2,945 (13.1)
	2 1/2 (64)	3 (76)	2,350 (10.4)	2,625 (11.7)	2,875 (12.8)	3,320 (14.8)	2,350 (10.4)	2,625 (11.7)	2,875 (12.8)	3,320 (14.8)
1/2	1 1/2 (38)	2 (51)	1,535 (6.8)	1,720 (7.6)	1,880 (8.4)	2,175 (9.7)	1,535 (6.8)	1,720 (7.6)	1,880 (8.4)	2,175 (9.7)
	2 (51)	2 1/2 (64)	2,080 (9.3)	2,330 (10.4)	2,550 (11.3)	2,945 (13.1)	2,080 (9.3)	2,330 (10.4)	2,550 (11.3)	2,945 (13.1)
	2 1/2 (64)	3 (76)	2,910 (12.9)	3,255 (14.5)	3,565 (15.9)	4,115 (18.3)	2,910 (12.9)	3,255 (14.5)	3,565 (15.9)	4,115 (18.3)
	3 1/4 (83)	3 3/4 (95)	3,480 (15.5)	3,890 (17.3)	4,260 (19.0)	4,920 (21.9)	6,960 (31.0)	7,780 (34.6)	8,525 (37.9)	9,845 (43.8)
5/8	2 3/4 (70)	3 1/4 (83)	3,355 (14.9)	3,755 (16.7)	4,110 (18.3)	4,750 (21.1)	6,715 (29.9)	7,505 (33.4)	8,225 (36.6)	9,495 (42.2)
	3 1/4 (83)	3 3/4 (95)	4,315 (19.2)	4,820 (21.5)	5,285 (23.5)	6,100 (27.1)	8,625 (38.4)	9,645 (42.9)	10,565 (47.0)	12,200 (54.3)
	4 (102)	4 1/2 (114)	4,750 (21.1)	5,310 (23.6)	5,820 (25.9)	6,720 (29.9)	9,505 (42.3)	10,625 (47.3)	11,640 (51.8)	13,440 (59.8)
3/4	3 1/4 (83)	4 (102)	4,315 (19.2)	4,820 (21.5)	5,285 (23.5)	6,100 (27.1)	8,625 (38.4)	9,645 (42.9)	10,565 (47.0)	12,200 (54.3)
	3 3/4 (95)	4 1/2 (114)	5,345 (23.8)	5,975 (26.6)	6,545 (29.1)	7,335 (33.6)	10,690 (47.6)	11,955 (53.2)	13,095 (58.2)	15,120 (67.3)
	4 3/4 (121)	5 1/2 (140)	6,000 (26.7)	6,400 (28.5)	6,745 (30.0)	7,335 (32.6)	15,240 (67.8)	17,040 (75.8)	18,670 (83.0)	21,555 (95.9)
1	4 (102)	4 5/8 (117)	5,890 (26.2)	6,585 (29.3)	7,215 (32.1)	8,330 (37.0)	11,780 (52.4)	13,170 (58.6)	14,425 (64.2)	16,660 (74.1)
	5 3/4 (146)	6 3/8 (162)	8,275 (36.8)	9,250 (41.1)	10,135 (45.1)	11,700 (52.0)	20,300 (90.3)	22,695 (101.0)	24,865 (110.6)	28,710 (127.7)

1 See Section 3.1.8 to convert factored resistance value to ASD value.
2 Linear interpolation between embedment depths and concrete compressive strengths is not permitted.
3 Apply spacing, edge distance, and concrete thickness factors in tables 6 to 17 as necessary. Compare to the steel values in Table 39. The lesser of the values is to be used for the design.
4 Tabular values are for normal weight concrete only. For lightweight concrete multiply design strength by λ_a as follows: For sand-lightweight, λ_a = 0.68; for all-lightweight, λ_a = 0.60.
5 Tabular values are for static loads only. Seismic design is not permitted for uncracked concrete. For seismic tension loads, multiply cracked concrete tabular values in tension only by $\alpha_{N,seis}$ = 0.75, except for 3/4 x 4-3/4 h_{ef} where $\alpha_{N,seis}$ = 0.73. No reduction needed for seismic shear. See Section 3.1.8 for additional information on seismic applications.
6 For core drilled installations of 3/4" anchors installed at 3-3/4" effective embedment, apply a reduction factor of 0.89 to the design tension strength

Table 42 — Hilti KB-TZ2 stainless steel tension design information in accordance with CSA A23.3 Annex D, applicable for both hammer and core drilled installations [1]

Design parameter	Symbol	Units	Nominal anchor diameter (in.)															Ref
			1/4	3/8			1/2			5/8			3/4			1		A23.3
Effective min. embedment [2]	h_{ef}	in.	1-1/2	1-1/2	2	2-1/2	2	2-1/2	3-1/4	2-3/4	3-1/4	4	3-1/4	3-3/4	4-3/4	4	5-3/4	
		(mm)	(38)	(38)	(51)	(64)	(51)	(64)	(83)	(70)	(83)	(102)	(83)	(95)	(121)	(102)	(146)	
Min. concrete thickness	h_{min}	in. (mm)	See Table 19															
Minimum edge distance	c_{min}	in. (mm)	See Table 19															
Minimum anchor spacing	s_{min}	in. (mm)	See Table 19															
Tension, steel failure modes																		
Steel embed. material resistance factor for reinforcement	Φ_s	-	0.85	0.85			0.85			0.85			0.85			0.85		8.4.3
Resistance modification factor for tension, steel failure modes [3]	R	-	0.80	0.80			0.80			0.80			0.80			0.80		
Min. specified yield strength	f_{ya}	psi	100,900	96,300			96,300			91,600			84,100			65,000		
		(N/mm²)	(696)	(664)			(664)			(632)			(580)			(448)		
Min. specified ult. strength	f_{ut}	psi	122,400	120,100			120,400			114,600			100,500			99,900		
		(N/mm²)	(844)	(828)						(790)			(693)			(689)		
Effective tensile stress area	$A_{se,N}$	in²	0.024	0.051			0.099			0.164			0.239			0.470		
		(mm²)	(15.4)	(33.2)			(63.6)			(106.0)			(154.4)			(303.2)		
Factored steel resistance in tension	N_{sar}	lb	2,050	4,210			8,070			12,810			16,350			31,930		D.6.1.2
		(kN)	(9.1)	(18.7)			(35.9)			(57.0)			(72.7)			(142.0)		
Tension, concrete failure modes																		
Anchor category	-	-	3	1			1			1			1			1		D.5.3 (c)
Concrete material resistance factor	Φ_c	-	0.65	0.65			0.65			0.65			0.65			0.65		8.4.2
Resistance modification factor for tension and shear, concrete failure modes, Condition B [5]	R	-	0.75	1.00			1.00			1.00			1.00			1.00		D.5.3 (c)
Coeff. for factored conc. breakout resistance, uncracked concrete	$k_{c,uncr}$	-	10.0	10.0	10.0	10.0	10.0	10.0	10.0	10.0	10.0	10.0	10.0	11.3[7]	10.0	11.3	11.3	D.6.2.2
Coeff. for factored conc. breakout resistance, cracked concrete	$k_{c,cr}$	-	7.1	8.8	8.8	7.1	7.1	8.8	7.1	8.8	8.8	7.1	8.8	8.8[7]	8.8	10.0	8.8	D.6.2.2
Modification factor for anchor resistance, tension, uncracked conc. [4]	$\Psi_{c,N}$	-	1.0	1.0			1.0			1.0			1.0			1.0		
Critical edge distance	c_{ac}	in.	4	4-1/2	5-1/2	4-1/8	5-1/2	6-1/4	7-1/2	10	7	9	12	10	10	11	15-1/2	
		(mm)	(102)	(114)	(140)	(105)	(140)	(159)	(191)	(254)	(178)	(229)	(305)	(254)	(254)	(279)	(394)	
Factored pullout resistance in 20 MPa uncracked concrete [6]	$N_{pr,uncr}$	lb	810	N/A	N/A	2,875	2,355	2,810	3,855	2,860	4,165	5,615	N/A	N/A	N/A	N/A	N/A	D.6.3.2
		(kN)	(3.6)			(12.8)	(10.5)	(12.5)	(17.1)	(12.7)	(18.5)	(25.0)						
Factored pullout resistance in 20 MPa cracked concrete [6]	$N_{pr,cr}$	lb	360	N/A	N/A	N/A	N/A	N/A	N/A[8]	N/A	N/A	N/A	N/A	N/A	6,160	N/A	N/A	D.6.3.2
		(kN)	(1.6)												(27.4)			
Factored pullout resistance in 20 MPa cracked concrete, seismic [6]	$N_{pr,eq}$	lb	360	N/A	N/A	N/A	N/A	N/A	N/A[8]	N/A	N/A	N/A	N/A	N/A	6,160	N/A	N/A	D.6.3.2
		(kN)	(1.6)												(27.4)			
Normalization factor, uncracked concrete	n_{uncr}	-	0.39	N/A	N/A	0.37	0.46	0.50	0.50	0.50	0.42	0.47	N/A	N/A	0.30	N/A	N/A	
Normalization factor, cracked concrete, seismic	n_{cr}	-	0.50	N/A	N/A	N/A	N/A	N/A	0.50	N/A	N/A	N/A	N/A	N/A	0.50	N/A	N/A	

1 Design information in this table is taken from ICC-ES ESR-4266, dated December, 2020, and revised July, 2021 Tables 5 and 7, and converted for use with CSA A23.3 Annex D.
2 See Figure 1 of this document.
3 The KB-TZ2 stainless steel anchor is considered a ductile steel element as defined by CSA A23.3 Annex D section D.2.
4 For all design cases, $\Psi_{c,N}$ = 1.0. The appropriate coefficient for breakout resistance for cracked concrete ($k_{c,cr}$) or uncracked concrete ($k_{c,uncr}$) must be used.
5 For use with the load combinations of CSA A23.3 chapter 8. Condition B applies where supplementary reinforcement in conformance with CSA A23.3 section D.5.3 is not provided, or where pullout or pryout strength governs. For cases where the presence of supplementary reinforcement can be verified, the resistance modification factors associated with Condition A may be used.
6 For all design cases, $\Psi_{c,P}$ = 1.0. Tabular value for pullout strength is for a concrete compressive strength of 2,900 psi (20.0 MPa). Pullout strength for concrete compressive strength greater than 2,900 psi (20.2 MPa) may be increased by multiplying the tabular pullout strength by (f'_c / 2,900)n for psi, or (f'_c / 20.2)^n for MPa.
7 For core drilled installation $k_{c,uncr}$ = 10.0 and $k_{c,cr}$ = 7.1 for 3/4" diameter installed at 3-3/4" effective embedment
8 For core drilled installation, $N_{p,c}r$ = 4245 lb (18.9 kN) and $N_{p,eq}$ = 4245 lb (18.9 kN) for 1/2-inch diameter anchors installed at 3-3/4 inches (95 mm) effective embedment.

Table 43 — Hilti KB-TZ2 stainless steel shear design information in accordance with CSA A23.3 Annex D, applicable for both hammer and core drilled installations[1]

Design parameter	Symbol	Units	Nominal anchor diameter (in.)															Ref
			1/4	3/8			1/2			5/8			3/4			1		A23.3
Anchor O.D.	d_a	in.	0.25	0.375			0.5			0.625			0.75			1.00		
		(mm)	(6.4)	(9.5)			(12.7)			(15.9)			(19.1)			(25.4)		
Effective min. embedment [2]	h_{ef}	in.	1-1/2	1-1/2	2	2-1/2	2	2-1/2	3-1/4	2-3/4	3-1/4	4	3-1/4	3-3/4	4-3/4	4	5-3/4	
		(mm)	(38)	(38)	(51)	(64)	(51)	(64)	(83)	(70)	(83)	(102)	(83)	(95)	(121)	(102)	(146)	
Shear, steel failure modes																		
Steel embed. material resistance factor for reinforcement	Φ_s	-	0.85	0.85			0.85			0.85			0.85			0.85		8.4.3
Resistance modification factor for shear, steel failure modes [3]	R	-	0.75	0.75			0.75			0.75			0.75			0.75		
Factored steel resistance in shear	V_{sar}	lb	930	2,940	3,115		5,320			7,875			10,555			14,635	20,020	D.7.1.2
		(kN)	(4.1)	(13.1)	(13.9)		(23.7)			(35.0)			(47.0)			(65.1)	(89.1)	
Factored steel resistance in shear, seismic	$V_{sar,eq}$	lb	710	2,940	3,115		5,320			7,875			8,585			8,585		
		(kN)	(3.2)	(13.1)	(13.9)		(23.7)			(35.0)			(38.2)			(38.2)		
Shear, concrete failure modes																		
Concrete material resistance factor	Φ_c	-	0.65	0.65			0.65			0.65			0.65			0.65		8.4.2
Resistance modification factor for shear, concrete failure modes [4]	R	-	0.75	1.00			1.00			1.00			1.00			1.00		D.5.3 (c)
Load bearing length of anchor in shear	ℓ_e	in.	1-1/2	1-1/2	2	2-1/2	2	2-1/2	3-1/4	2-3/4	3-1/4	4	3-1/4	3-3/4	4-3/4	4	5-3/4	
		(mm)	(38)	(38)	(51)	(64)	(51)	(64)	(83)	(70)	(83)	(102)	(83)	(95)	(121)	(102)	(146)	
Effectiveness factor for pryout	k_{cp}	-	1.0	1.0	1.0	2.0	1.0	2.0	2.0	2.0	2.0	2.0	2.0	2.0	2.0	2.0	2.0	

1 Design information in this table is taken from ICC-ES ESR-4266, dated December, 2020, and revised July, 2021 Tables 5 and 7, and converted for use with CSA A23.3 Annex D.
2 See Figure 1 of this document.
3 The KB-TZ2 stainless steel anchor is considered a ductile steel element as defined by CSA A23.3 Annex D section D.2.
4 For use with the load combinations of CSA A23.3 chapter 8. Condition B applies where supplementary reinforcement in conformance with CSA A23.3 section D.5.3 is not provided, or where pullout or pryout strength governs. For cases where the presence of supplementary reinforcement can be verified, the resistance modification factors associated with Condition A may be used.

Table 44 — Steel resistance for Hilti KB-TZ2 stainless steel anchors [1,2]

Nominal anchor diameter in.	Effective embedment depth in. (mm)			Tensile [3] N_{sar} lb (kN)	Shear [4] V_{sar} lb (kN)	Seismic Shear [5] $V_{sar,eq}$ lb (kN)
1/4	1-1/2 (38)			2,050 (9.1)	930 (4.1)	710 (3.2)
3/8	1-1/2 (38)			4,210 (18.7)	2,940 (13.1)	2,940 (13.1)
3/8	2 (51)	2-1/2 (64)		4,210 (18.7)	3,115 (13.9)	3,115 (13.9)
1/2	2 (51)	2-1/2 (64)	3-1/4 (83)	8,070 (35.9)	5,320 (23.7)	5,320 (23.7)
5/8	2-3/4 (70)	3-1/4 (83)	4 (102)	12,810 (57.0)	7,875 (35.0)	7,875 (35.0)
3/4	3-1/4 (83)	3-3/4 (95)	4-3/4 (121)	16,350 (72.7)	10,555 (47.0)	8,585 (38.2)
1	4 (102)			31,930 (142.0)	14,635 (65.1)	8,585 (38.2)
1	5-3/4 (146)			31,930 (142.0)	20,020 (89.1)	8,585 (38.2)

1 See Section 3.1.8 to convert factored resistance value to ASD value.
2 Hilti KB-TZ2 stainless steel anchors are to be considered ductile steel elements.
3 Tensile Nsar = Ase,N fs futa R as noted in CSA A23.3 Annex D.
4 Shear determined by static shear tests with Vsar < 0.6 Ase,V fs futa R as noted in CSA A23.3 Annex D.
5 Seismic shear values determined by seismic shear tests with Vsar,eq < 0.60 Ase,V fs futa R as noted in CSA A23.3 Annex D. See Section 3.1.8 for additional information on seismic applications.

Table 45 — Hilti KB-TZ2 stainless steel factored resistance based on concrete failure modes in uncracked concrete, applicable for both hammer and core drilled installations [1,2,3,4]

Nominal anchor diameter in.	Effective embedment in. (mm)	Nominal embedment in. (mm)	Tension - N_r				Shear - V_r			
			f'_c = 20 MPa (2,900 psi) lb (kN)	f'_c = 25 MPa (3,625 psi) lb (kN)	f'_c = 30 MPa (4,350 psi) lb (kN)	f'_c = 40 MPa (5,800 psi) lb (kN)	f'_c = 20 MPa (2,900 psi) lb (kN)	f'_c = 25 MPa (3,625 psi) lb (kN)	f'_c = 30 MPa (4,350 psi) lb (kN)	f'_c = 40 MPa (5,800 psi) lb (kN)
1/4	1 1/2 (38)	1 3/4 (44)	810 (3.6)	885 (3.9)	950 (4.2)	1,065 (4.7)	1,535 (6.8)	1,720 (7.6)	1,880 (8.4)	2,175 (9.7)
3/8	1 1/2 (38)	1 7/8 (48)	1,535 (6.8)	1,720 (7.6)	1,880 (8.4)	2,175 (9.7)	1,535 (6.8)	1,720 (7.6)	1,880 (8.4)	2,175 (9.7)
	2 (51)	2 1/2 (64)	2,365 (10.5)	2,645 (11.8)	2,900 (12.9)	3,345 (14.9)	2,365 (10.5)	2,645 (11.8)	2,900 (12.9)	3,345 (14.9)
	2 1/2 (64)	3 (76)	2,875 (12.8)	3,125 (13.9)	3,340 (14.9)	3,715 (16.5)	6,615 (29.4)	7,395 (32.9)	8,100 (36.0)	9,355 (41.6)
1/2	2 (51)	2 1/2 (64)	2,355 (10.5)	2,610 (11.6)	2,835 (12.6)	3,240 (14.4)	2,365 (10.5)	2,645 (11.8)	2,900 (12.9)	3,345 (14.9)
	2-1/2 (64)	3 (76)	2,810 (12.5)	3,140 (14.0)	3,440 (15.3)	3,975 (17.7)	6,615 (29.4)	7,395 (32.9)	8,100 (36.0)	9,355 (41.6)
	3 1/4 (83)	3 3/4 (95)	3,855 (17.1)	4,310 (19.2)	4,720 (21.0)	5,450 (24.2)	9,805 (43.6)	10,960 (48.8)	12,005 (53.4)	13,865 (61.7)
5/8	2 3/4 (70)	3 1/4 (83)	2,860 (12.7)	3,200 (14.2)	3,505 (15.6)	4,045 (18.0)	7,630 (33.9)	8,530 (37.9)	9,345 (41.6)	10,790 (48.0)
	3 1/4 (83)	3 3/4 (95)	4,165 (18.5)	4,575 (20.3)	4,935 (22.0)	5,570 (24.8)	9,805 (43.6)	10,960 (48.8)	12,005 (53.4)	13,865 (61.7)
	4 (102)	4 1/2 (114)	5,615 (25.0)	6,235 (27.7)	6,795 (30.2)	7,775 (34.6)	13,385 (59.5)	14,965 (66.6)	16,395 (72.9)	18,930 (84.2)
3/4	3 1/4 (83)	4 (102)	4,900 (21.8)	5,480 (24.4)	6,005 (26.7)	6,930 (30.8)	9,805 (43.6)	10,960 (48.8)	12,005 (53.4)	13,865 (61.7)
	3 3/4[6] (95)	4 1/2 (114)	6,865 (30.5)	7,675 (34.1)	8,405 (37.4)	9,710 (43.2)	13,730 (61.1)	15,350 (68.3)	16,815 (74.8)	19,415 (86.4)
	4 3/4 (121)	5 1/2 (140)	8,660 (38.5)	9,685 (43.1)	10,605 (47.2)	12,250 (54.5)	17,320 (77.0)	19,365 (86.1)	21,215 (94.4)	24,495 (109.0)
1	4 (102)	4 5/8 (117)	7,560 (33.6)	8,455 (37.6)	9,260 (41.2)	10,695 (47.6)	15,125 (67.3)	16,910 (75.2)	18,525 (82.4)	21,390 (95.1)
	5 3/4 (146)	6 3/8 (162)	13,035 (58.0)	14,570 (64.8)	15,965 (71.0)	18,435 (82.0)	26,070 (116.0)	29,145 (129.6)	31,925 (142.0)	36,865 (164.0)

Table 46 — Hilti KB-TZ2 stainless steel factored resistance based on concrete failure modes in cracked concrete, applicable for both hammer and core drilled installations [1,2,3,4]

Nominal anchor diameter in.	Effective embedment in. (mm)	Nominal embedment in. (mm)	Tension - N_r				Shear - V_r			
			f'_c = 20 MPa (2,900 psi) lb (kN)	f'_c = 25 MPa (3,625 psi) lb (kN)	f'_c = 30 MPa (4,350 psi) lb (kN)	f'_c = 40 MPa (5,800 psi) lb (kN)	f'_c = 20 MPa (2,900 psi) lb (kN)	f'_c = 25 MPa (3,625 psi) lb (kN)	f'_c = 30 MPa (4,350 psi) lb (kN)	f'_c = 40 MPa (5,800 psi) lb (kN)
1/4	1 1/2 (38)	1 3/4 (44)	470 (2.1)	525 (2.3)	575 (2.6)	665 (3.0)	820 (3.6)	915 (4.1)	1,000 (4.5)	1,155 (5.1)
3/8	1 1/2 (38)	1 7/8 (48)	1,350 (6.0)	1,510 (6.7)	1,655 (7.4)	1,915 (8.5)	1,350 (6.0)	1,510 (6.7)	1,655 (7.4)	1,915 (8.5)
	2 (51)	2 1/2 (64)	2,080 (9.3)	2,330 (10.4)	2,550 (11.3)	2,945 (13.1)	2,080 (9.3)	2,330 (10.4)	2,550 (11.3)	2,945 (13.1)
	2 1/2 (64)	3 (76)	2,350 (10.4)	2,625 (11.7)	2,875 (12.8)	3,320 (14.8)	4,695 (20.9)	5,250 (23.4)	5,750 (25.6)	6,640 (29.5)
1/2	2 (51)	2 1/2 (64)	1,680 (7.5)	1,880 (8.4)	2,060 (9.2)	2,375 (10.6)	1,680 (7.5)	1,880 (8.4)	2,060 (9.2)	2,375 (10.6)
	2-1/2 (64)	3 (76)	2,910 (12.9)	3,255 (14.5)	3,565 (15.9)	4,115 (18.3)	5,820 (25.9)	6,505 (28.9)	7,130 (31.7)	8,230 (36.6)
	3 1/4[8] (83)	3 3/4 (95)	3,480 (15.5)	3,890 (17.3)	4,260 (19.0)	4,920 (21.9)	6,960 (31.0)	7,780 (34.6)	8,525 (37.9)	9,845 (43.8)
5/8	2 3/4 (70)	3 1/4 (83)	3,355 (14.9)	3,755 (16.7)	4,110 (18.3)	4,750 (21.1)	6,715 (29.9)	7,505 (33.4)	8,225 (36.6)	9,495 (42.2)
	3 1/4 (83)	3 3/4 (95)	4,315 (19.2)	4,820 (21.5)	5,285 (23.5)	6,100 (27.1)	8,625 (38.4)	9,645 (42.9)	10,565 (47.0)	12,200 (54.3)
	4 (102)	4 1/2 (114)	4,750 (21.1)	5,310 (23.6)	5,820 (25.9)	6,720 (29.9)	9,505 (42.3)	10,625 (47.3)	11,640 (51.8)	13,440 (59.8)
3/4	3 1/4 (83)	4 (102)	4,315 (19.2)	4,820 (21.5)	5,285 (23.5)	6,100 (27.1)	8,625 (38.4)	9,645 (42.9)	10,565 (47.0)	12,200 (54.3)
	3 3/4[7] (95)	4 1/2 (114)	5,345 (23.8)	5,975 (26.6)	6,545 (29.1)	7,560 (33.6)	10,690 (47.6)	11,955 (53.2)	13,095 (58.2)	15,120 (67.3)
	4 3/4 (121)	5 1/2 (140)	6,160 (27.4)	6,890 (30.6)	7,545 (33.6)	8,715 (38.8)	15,240 (67.8)	17,040 (75.8)	18,670 (83.0)	21,555 (95.9)
1	4 (102)	4 5/8 (117)	6,690 (29.8)	7,480 (33.3)	8,195 (36.5)	9,465 (42.1)	13,385 (59.5)	14,965 (66.6)	16,395 (72.9)	18,930 (84.2)
	5 3/4 (146)	6 3/8 (162)	10,150 (45.2)	11,350 (50.5)	12,430 (55.3)	14,355 (63.9)	20,300 (90.3)	22,695 (101.0)	24,865 (110.6)	28,710 (127.7)

1 See Section 3.1.8 to convert factored resistance value to ASD value.
2 Linear interpolation between embedment depths and concrete compressive strengths is not permitted.
3 Apply spacing, edge distance, and concrete thickness factors in tables 22 to 33 as necessary. Compare to the steel values in Table 43. The lesser of the values is to be used for the design.
4 Tabular values are for normal weight concrete only. For lightweight concrete multiply design strength by λ_a as follows: For sand-lightweight, λ_a = 0.68; for all-lightweight, λ_a = 0.60.
5 Tabular values are for static loads only. Seismic design is not permitted for uncracked concrete. For seismic tension loads, multiply cracked concrete tabular values in tension only by $\alpha_{N,seis}$ = 0.75. No reduction needed for seismic shear, except for the 3/4 bolts where $\alpha_{V,seis}$ = 0.81. See Section 3.1.8 for additional information on seismic applications.
6 For core drilled installations of 3/4" anchors installed at 3-3/4" effective embedment, apply a reduction factor of 0.89 to the design tension strength.
7 For core drilled installations of 3/4" anchors installed at 3-3/4" effective embedment, apply a reduction factor of 0.81 to the design tension strength.
8 Fore core drilled installations of 1/2" anchors installed at 3-1/4" effective embedment, apply a reduction factor of 0.85 to the design tension strength.

Table 47 — Hilti KB-TZ2 carbon steel factored resistance in the soffit of uncracked lightweight concrete over metal deck, applicable for both hammer and core drilled installations[1,2,3,4,5,6]

Nominal anchor diameter in.	Nominal embedment in. (mm)	Installation per Figure 4				Installation per Figure 5			
		Min. conc. thickness [8] in. (mm)	Tension - N_r		Shear - V_r	Min. conc. thickness [8] in. (mm)	Tension - N_r		Shear - V_r
			f'_c = 20 MPa (2,900 psi) lb (kN)	f'_c = 30 MPa (4,350 psi) lb (kN)	f'_c ≥ 20 MPa (2,900 psi) lb (kN)		f'_c = 20 MPa (2,900 psi) lb (kN)	f'_c = 30 MPa (4,350 psi) lb (kN)	f'_c ≥ 20 MPa (2,900 psi) lb (kN)
1/4	1-3/4 (44)	2-1/2 (64)	835 (3.7)	905 (4.0)	1,040 (4.6)	2-1/4 (57)	670 (3.0)	725 (3.2)	715 (3.2)
3/8	1-7/8 (48)	2-1/2 (64)	1,195 (5.3)	1,310 (5.8)	865 (3.8)	2-1/4 (57)	640 (2.8)	700 (3.1)	1,510 (6.7)
	2-1/2 (64)	2-1/2 (64)	1,690 (7.5)	1,865 (8.3)	1,350 (6.0)	2-1/4 (57)	1600 (7.1)	1,765 (7.9)	1,595 (7.1)
	3 (76)	2-1/2 (64)	1,925 (8.6)	2,215 (9.9)	1,350 (6.0)	N/A	N/A	N/A	N/A
1/2	2 (51)	2-1/2 (64)	1,185 (5.3)	1,450 (6.4)	1,140 (5.1)	2-1/4 (57)	1,160 (5.2)	1,420 (6.3)	1,710 (7.6)
	2-1/2 (64)	2-1/2 (64)	1,760 (7.8)	2,090 (9.3)	1,440 (6.4)	2-1/4 (57)	1,220 (5.4)	1,445 (6.4)	2,025 (9.0)
	3-1/4 (83)	2-1/2 (64)	2,410 (10.7)	2,710 (12.1)	2,095 (9.3)	N/A	N/A	N/A	N/A
	3-3/4 (95)	2-1/2 (64)	3,030 (13.5)	3,490 (15.5)	2,700 (12.0)	3-1/4 (83)	1,710 (7.6)	1,975 (8.8)	2,210 (9.8)
5/8	3-1/4 (83)	2-1/2 (64)	2,820 (12.5)	3,455 (15.4)	2,430 (10.8)	3-1/4 (83)	1,890 (8.4)	2,315 (10.3)	2,605 (11.6)
	4-1/2 (114)	2-1/2 (64)	3,715 (16.5)	4,550 (20.2)	2,965 (13.2)	N/A	N/A	N/A	N/A
3/4	4 (102)	2-1/2 (64)	2,440 (10.9)	2,815 (12.5)	2,605 (11.6)	N/A	N/A	N/A	N/A
	4-1/2[9] (114)	3-1/4 (83)	3,085 (13.7)	3,495 (15.5)	5,015 (22.3)	N/A	N/A	N/A	N/A

Table 48 — Hilti KB-TZ2 carbon steel factored resistance in the soffit of cracked lightweight concrete over metal deck, applicable for both hammer and core drilled installations [1,2,3,4,5,6,7]

Nominal anchor diameter in.	Nominal embedment in. (mm)	Installation per Figure 4				Installation per Figure 5			
		Min. conc. thickness [8] in. (mm)	Tension - N_r		Shear - V_r	Min. conc. thickness [8] in. (mm)	Tension - N_r		Shear - V_r
			f'_c = 20 MPa (2,900 psi) lb (kN)	f'_c = 30 MPa (4,350 psi) lb (kN)	f'_c ≥ 20 MPa (2,900 psi) lb (kN)		f'_c = 20 MPa (2,900 psi) lb (kN)	f'_c = 30 MPa (4,350 psi) lb (kN)	f'_c ≥ 20 MPa (2,900 psi) lb (kN)
1/4	1-3/4 (44)	2-1/2 (64)	250 (1.1)	290 (1.3)	1,040 (4.6)	2-1/4 (57)	195 (0.9)	230 (1.0)	715 (3.2)
3/8	1-7/8 (48)	2-1/2 (64)	1,040 (4.6)	1,270 (5.6)	865 (3.8)	2-1/4 (57)	555 (2.5)	680 (3.0)	1,510 (6.7)
	2-1/2 (64)	2-1/2 (64)	1,470 (6.5)	1,770 (7.9)	1,350 (6.0)	2-1/4 (57)	1,365 (6.1)	1,645 (7.3)	1,595 (7.1)
	3 (76)	2-1/2 (64)	1,550 (6.9)	1,735 (7.7)	1,350 (6.0)	N/A	N/A	N/A	N/A
1/2	2 (51)	2-1/2 (64)	1,055 (4.7)	1,275 (5.7)	1,140 (5.1)	2-1/4 (57)	945 (4.2)	1,160 (5.1)	1,710 (7.6)
	2-1/2 (64)	2-1/2 (64)	1,365 (6.1)	1,670 (7.4)	1,440 (6.4)	2-1/4 (57)	945 (4.2)	1,160 (5.2)	2,025 (9.0)
	3-1/4 (83)	2-1/2 (64)	2,095 (9.3)	2,545 (11.3)	2,095 (9.3)	N/A	N/A	N/A	N/A
	3-3/4 (95)	2-1/2 (64)	2,140 (9.5)	2,520 (11.2)	2,700 (12.0)	3-1/4 (83)	1,210 (5.4)	1,425 (6.3)	2,210 (9.8)
5/8	3-1/4 (83)	2-1/2 (64)	2,510 (11.2)	3,075 (13.7)	2,430 (10.8)	3-1/4 (83)	1,685 (7.5)	2,060 (9.2)	2,605 (11.6)
	4-1/2 (114)	2-1/2 (64)	2,810 (12.5)	3,440 (15.3)	2,965 (13.2)	N/A	N/A	N/A	N/A
3/4	4 (102)	2-1/2 (64)	2,135 (9.5)	2,470 (11.0)	2,605 (11.6)	N/A	N/A	N/A	N/A
	4-1/2 (114)	3-1/4 (83)	2,400 (10.7)	2,700 (12.0)	5,015 (22.3)	N/A	N/A	N/A	N/A

1 See Section 3.1.8 to convert design strength value to ASD value.
2 Linear interpolation between embedment depths and concrete compressive strengths is not permitted.
3 Tabular value is for one anchor per flute. Minimum spacing along the length of the flute is 3 x h_{ef} (effective embedment).
4 Tabular values are lightweight concrete and no additional reduction factor is needed.
5 No additional reduction factors for spacing or edge distance need to be applied.
6 Comparison of the tabular values to the steel strength is not necessary. Tabular values control.
7 Tabular values are for static loads only. Seismic design is not permitted for uncracked concrete. For seismic tension loads, multiply cracked concrete tabular values in tension only by $\alpha_{N,seis}$ = 0.75, except for 3/4 x 4-3/4 h_{ef} where $\alpha_{N,seis}$ = 0.73. See Section 3.1.8 for additional information on seismic applications.
8 Minimum concrete thickness over the upper flute when anchor is installed in the lower flute. See Figure 4 and 5.
9 For core drilled installations of 3/4" anchors installed at 4-1/2" nominal embedment, apply a reduction factor of 0.89 to the design tension strength of anchors installed in uncracked concrete.

Table 49 — Allowable tensile loads for Hilti KB-TZ2 carbon steel and stainless steel anchors in the face of grout-filled concrete masonry unit (CMU) walls [1,3,4,5,6]

Nominal anchor diameter	Nominal embedment		Allowable Tensile capacity at s_{cr} and c_{cr}		Spacing: Critical spacing, s_{cr}		Spacing: Minimum spacing[2], s_{min}		Spacing: Load Multiplier at s_{min}	Edge Distance: Critical edge distance, c_{cr}		Edge Distance: Minimum edge distance, c_{min}		Edge Distance: Load Multiplier at c_{min}
in.	in.	(mm)	lb	(kN)	in	(mm)	in	(mm)		in	(mm)	in	(mm)	
1/4	1-3/4	(44)	145	(0.6)	6	(152)	3	(76)	0.62	12	(305)	4	(102)	0.87
3/8	1-7/8	(48)	405	(1.8)	6	(152)			0.49					0.80
	3	(76)	590	(2.6)	10	(254)			0.58					0.93
1/2	2-1/2	(64)	500	(2.2)	8	(203)	4	(102)	0.59					0.94
	3-3/4	(95)	640	(2.8)	13	(330)			0.78					1.00
5/8	3-1/4	(83)	890	(4.0)	11	(279)	5	(127)	0.66	20	(508)			0.96
	4-1/2	(114)	940	(4.2)	16	(406)			0.61					0.96
3/4	4	(102)	1,245	(5.5)	13	(330)	6	(152)	0.49					0.75
	5-1/2	(140)	1,385	(6.2)	19	(483)			0.45					0.82

Table 50 — Allowable shear loads for Hilti KB-TZ2 carbon steel and stainless steel anchors in the face of grout-filled concrete masonry unit (CMU) walls [1,3,4,5,6]

Nominal anchor diameter	Nominal embedment		Allowable shear capacity at s_{cr} and c_{cr}		Spacing: Critical spacing, s_{cr}		Spacing: Minimum spacing, s_{min}[2]		Spacing: Load multiplier at s_{min}	Edge Distance: Critical edge distance, c_{cr}		Edge Distance: Minimum edge distance, c_{min}		Edge Distance: Perpendicular load reduction factor at c_{min}	Edge Distance: Parallel load reduction factor at c_{min}
in.	in.	(mm)	lb	(kN)	in	(mm)	in	(mm)		in	(mm)	in	(mm)		
1/4	1-3/4	(44)	320	(1.4)	6	(152)	3	(76)	0.73	12	(305)	4	(102)	1.00	1.00
3/8	1-7/8	(48)	585	(2.6)	6	(152)								0.76	0.99
	3	(76)	695	(3.1)	10	(254)									
1/2	2-1/2	(64)	1,045	(4.7)	8	(203)	4	(102)						0.50	0.83
	3-3/4	(95)			13	(330)									
5/8	3-1/4	(83)	1,735	(7.7)	11	(279)	5	(127)		20	(508)			0.36	0.75
	4-1/2	(114)	2,050	(9.1)	16	(406)								0.35	0.85
3/4	4	(102)	1,735	(7.7)	13	(330)	6	(152)						0.36	0.75
	5-1/2	(140)	2,050	(9.1)	19	(483)								0.35	0.85

1 Values valid for anchors installed in face shells of Type 1, Grade N, lightweight, medium-weight, or normal-weight concrete masonry units conforming to ASTM C90. The masonry units must be fully grouted with coarse grout conforming to 2018 and 2015 IBC Section 2103.3, 2012 IBC Section 2103.13, or 2009 IBC Section 2103.12. Mortar must comply with 2018 and 2015 IBC Section 2103.2.1, 2012 IBC Section 2103.9, or 2009 IBC Section 2103.8. Masonry compressive strength must be at least 1,500 psi at the time of anchor installation.
2 Loads tabulated are applicable to anchors spaced a critical distance of 4 times the effective embedment. The anchors may be placed at a minimum spacing, s_{min}, provided that reductions are applied to the tabulated values.
3 Anchors must be installed a minimum of 1-3/8-inches from any vertical mortar joint in accordance with Figure 6.
4 Embedment depth must be measured from the outside face of the concrete masonry unit.
5 For intermediate edge and spacing distances, allowable loads may be determined by linearly interpolating between the allowable loads at the two tabulated edge or spacing distances.
6 The tabulated allowable loads have been calculated based on a safety factor of 5.0.

Table 51 — Allowable tensile and shear loads for Hilti KB-TZ2 carbon and stainless steel anchors in the top of grout-filled concrete masonry walls [1,3,4,5,6]

Nominal anchor diameter	Nominal embedment		Minimum edge distance from edge of wall, C_{min}		Minimum spacing,[2] s_{min}		Minimum end distance C_{end}		Allowable tensile capacity		Allowable shear capacity			
											Parallel to edge of masonry wall		Perpendicular to edge of masonry wall	
in.	in.	(mm)	in	(mm)	in	(mm)	in	(mm)	lb	(kN)	lb	(kN)	lb	(kN)
3/8	1-7/8	(48)	1-3/4	(44)	6	(152)	12	(305)	300	(1.3)	325	(1.4)	175	(0.8)
	3	(76)			10	(254)	12	(305)	395	(1.8)	475	(2.1)	220	(1.0)
1/2	2-1/2	(64)			8	(203)	12	(305)	385	(1.7)	500	(2.2)	195	(0.9)
	3-3/4	(95)			13	(330)	12	(305)	485	(2.2)	610	(2.7)	240	(1.1)
5/8	3-1/4	(83)	2-3/4	(70)	11	(279)	12	(305)	620	(2.8)	930	(4.1)	410	(1.8)
	4-1/2	(114)			16	(406)	12	(305)	865	(3.8)	1240	(5.5)	465	(2.1)

1 Values valid for anchors installed in face shells of Type 1, Grade N, lightweight, medium-weight, or normal-weight concrete masonry units conforming to ASTM C90. The masonry units must be fully grouted with coarse grout conforming to 2018 and 2015 IBC Section 2103.3, 2012 IBC Section 2103.13, or 2009 IBC Section 2103.12. Mortar must comply with 2018 and 2015 IBC Section 2103.2.1, 2012 IBC Section 2103.9, or 2009 IBC Section 2103.8. Masonry compressive strength must be at least 1,500 psi at the time of anchor installation.
2 Loads tabulated are applicable to anchors spaced a critical distance of 4 times the effective embedment. The anchors may be placed at a minimum spacing, s_{min}, provided that reductions are applied to the tabulated values.
3 Anchors must be installed a minimum of 1-3/8 inches from any head joint in accordance with Figure 6.
4 Embedment depth must be measured from the outside face of the concrete masonry unit.
5 For intermediate edge and spacing distances, allowable loads may be determined by linearly interpolating between the allowable loads at the two tabulated edge or spacing distances.
6 The tabulated allowable loads have been calculated based on a safety factor of 5.0.

Figure 7 — Acceptable locations (shaded areas) for Hilti KB-TZ2 anchors in the face of grout-filled CMU walls

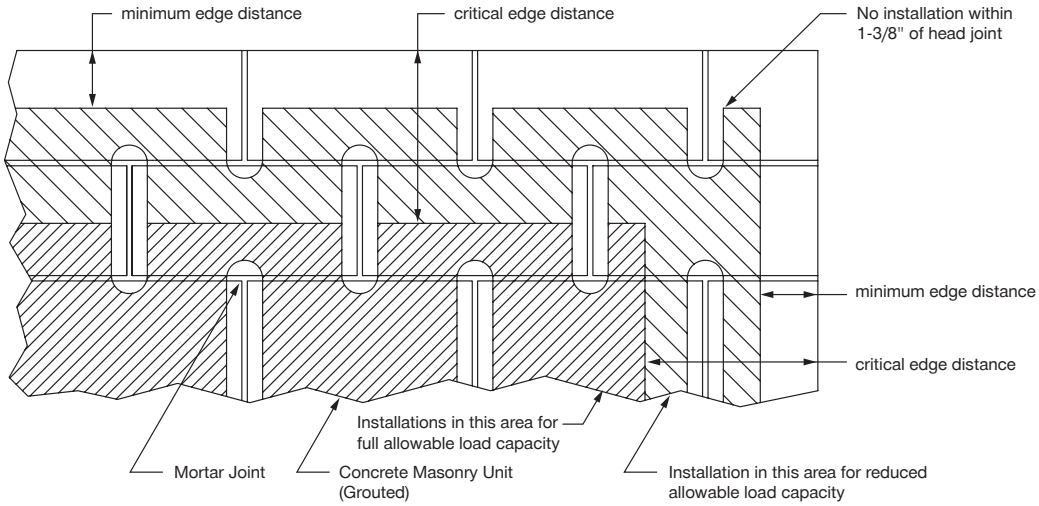

Anchor installation is restricted to shaded areas

Figure 8 — Edge and end distances for the Hilti KB-TZ2 anchors installed in the top of grout-filled CMU walls

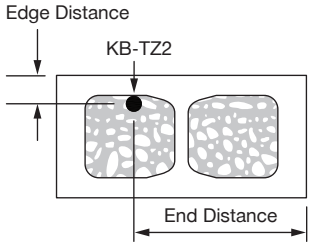

INSTALLATION INSTRUCTIONS

Installation Instructions For Use (IFU) are included with each product package. They can also be viewed or downloaded online at www.hilti.com. Because of the possibility of changes, always verify that downloaded IFU are current when used. Proper installation is critical to achieve full performance. Training is available on request. Contact Hilti Technical Services for applications and conditions not addressed in the IFU.

ORDERING INSTRUCTIONS

Table 52 — Hilti KB-TZ2 carbon steel product portfolio

Description	Length (in)	Length ident. letter	Thread length (in)	Nominal embed. 1 (in)	Min. fixture thickness 1 (in)	Max. fixture thickness 1 (in)	Nominal embed. 2 (in)	Min. fixture thickness 2 (in)	Max. fixture thickness 2 (in)	Nominal embed. 3 (in)	Min. fixture thickness 3 (in)	Max. fixture thickness 3 (in)	Nominal embed. 4 (in)	Min. fixture thickness 4 (in)	Max. fixture thickness 4 (in)	Package quantity
KB-TZ2 1/4 x 2-1/8	2-1/8	B	7/8	1-3/4	0	1/8	-	-	-	-	-	-	-	-	-	100
KB-TZ2 1/4 x 2-1/2	2-1/2	C	1-1/4	1-3/4	0	1/2	-	-	-	-	-	-	-	-	-	100
KB-TZ2 1/4 x 3-1/4	3-1/4	D	2	1-3/4	0	1-1/4	-	-	-	-	-	-	-	-	-	100
KB-TZ2 1/4 x 4-1/2	4-1/2	G	3	1-3/4	1/8	2-1/2	-	-	-	-	-	-	-	-	-	100
KB-TZ2 3/8 x 2-1/2	2-1/2	C	1	1-7/8	0	1/4	-	-	-	-	-	-	-	-	-	50
KB-TZ2 3/8 x 3	3	D	1 1/2	1-7/8	0	3/4	2-1/2	0	1/4	-	-	-	-	-	-	50
KB-TZ2 3/8 x 3-1/2	3-1/2	Ω	2	1-7/8	0	1-1/4	2-1/2	0	3/4	3	0	1/4	-	-	-	50
KB-TZ2 3/8 x 3-3/4	3-3/4	E	2-1/4	1-7/8	0	1-1/2	2-1/2	0	1	3	0	1/2	-	-	-	50
KB-TZ2 3/8 x 5	5	H	3-1/2	1-7/8	0	2-3/4	2-1/2	0	2-1/4	3	0	1-3/4	-	-	-	50
KB-TZ2 3/8 x 7	7	L	4-7/8	1-7/8	1/2	4-3/4	2-1/2	0	4-1/4	3	0	3-3/4	-	-	-	50
KB-TZ2 1/2 x 3	3	D	1-1/8	2	1/4	1/2	2-1/2	0	0	-	-	-	-	-	-	20
KB-TZ2 1/2 x 3-3/4	3-3/4	E	1-5/8	2	1/2	1-1/4	2-1/2	0	3/4	3	0	1/4	-	-	-	20
KB-TZ2 1/2 x 4-1/2	4-1/2	G	2-3/8	2	1/2	2	2-1/2	0	1-1/2	3	0	1	3-3/4	0	1/4	20
KB-TZ2 1/2 x 5-1/2	5-1/2	I	3-3/8	2	1/2	3	2-1/2	0	2-1/2	3	0	2	3-3/4	0	1-1/4	20
KB-TZ2 1/2 x 7	7	L	4-3/4	2	5/8	4-1/2	2-1/2	1/8	4	3	0	3-1/2	3-3/4	0	2-3/4	20
KB-TZ2 1/2 x 8-1/2	8-1/2	O	4-7/8	2	2	6	2-1/2	1-1/2	5-1/2	3	1	5	3-3/4	1/4	4-1/4	20
KB-TZ2 1/2 x 10	10	R	4-7/8	2	3-1/2	7-1/2	2-1/2	3	7	3	2-1/2	6-1/2	3-3/4	1-3/4	5-3/4	20
KB-TZ2 5/8 x 4-1/4	4-1/4	F	2-1/4	3-1/4	0	3/8	-	-	-	-	-	-	-	-	-	15
KB-TZ2 5/8 x 4-3/4	4-3/4	G	2-3/4	3-1/4	0	7/8	3-3/4	0	3/8	-	-	-	-	-	-	15
KB-TZ2 5/8 x 5-1/2	5-1/2	I	3-1/2	3-1/4	0	1-5/8	3-3/4	0	1-1/8	4-1/2	0	3/8	-	-	-	15
KB-TZ2 5/8 x 6	6	J	4	3-1/4	0	2-1/8	3-3/4	0	1-5/8	4-1/2	0	7/8	-	-	-	15
KB-TZ2 5/8 x 7	7	L	4-7/8	3-1/4	0	3-1/8	3-3/4	0	2-5/8	4-1/2	0	1-7/8	-	-	-	15
KB-TZ2 5/8 x 8-1/2	8-1/2	O	6-1/2	3-1/4	0	4-5/8	3-3/4	0	4-1/8	4-1/2	0	3-3/8	-	-	-	15
KB-TZ2 5/8 x 10	10	R	7-1/8	3-1/4	1/8	6-1/8	3-3/4	0	5-5/8	4-1/2	0	4-7/8	-	-	-	15
KB-TZ2 3/4 x 4-3/4	4-3/4	G	2-1/2	4	0	1/8	-	-	-	-	-	-	-	-	-	10
KB-TZ2 3/4 x 5-1/2	5-1/2	I	3-1/4	4	0	7/8	4-1/2	0	3/8	-	-	-	-	-	-	10
KB-TZ2 3/4 x 6-1/4	6-1/4	J	3-1/4	4	0	1-5/8	4-1/2	0	1-1/8	5-1/2	0	1/8	-	-	-	10
KB-TZ2 3/4 x 7	7	L	4	4	0	2-3/8	4-1/2	0	1-7/8	5-1/2	0	7/8	-	-	-	10
KB-TZ2 3/4 x 8	8	N	5	4	0	3-3/8	4-1/2	0	2-7/8	5-1/2	0	1-7/8	-	-	-	10
KB-TZ2 3/4 x 9	9	P	6	4	0	4-3/8	4-1/2	0	3-7/8	5-1/2	0	2-7/8	-	-	-	10
KB-TZ2 3/4 x 10	10	R	7	4	0	5-3/8	4-1/2	0	4-7/8	5-1/2	0	3-7/8	-	-	-	10
KB-TZ2 1x6-1/2	6-1/2	K	2 1/2	4 5/8	0	1-1/8	6-3/8	-	-	-	-	-	-	-	-	10
KB-TZ2 1x8	8	N	3 7/8	4 5/8	0	2-5/8	6-3/8	0	7/8	-	-	-	-	-	-	10
KB-TZ2 1x9	9	P	3 7/8	4 5/8	7/8	3-5/8	6-3/8	0	1-7/8	-	-	-	-	-	-	10
KB-TZ2 1x10-1/2	10-1/2	R	6	4 5/8	3/8	5-1/8	6-3/8	0	3-3/8	-	-	-	-	-	-	10
KB-TZ2 1x12	12	T	6	4 5/8	1-7/8	6-5/8	6-3/8	1/8	4-7/8	-	-	-	-	-	-	10

Table 53 — Hilti KB-TZ2 SS304 product portfolio

Description	Length (in)	Length ident. letter	Thread length (in)	Nominal embed. 1 (in)	Min. fixture thickness 1 (in)	Max. fixture thickness 1 (in)	Nominal embed. 2 (in)	Min. fixture thickness 2 (in)	Max. fixture thickness 2 (in)	Nominal embed. 3 (in)	Min. fixture thickness 3 (in)	Max. fixture thickness 3 (in)	Package quantity
KB-TZ2 1/4x2-1/8 SS304	2-1/8	B	7/8	1-3/4	0	1/8	-	-	-	-	-	-	100
KB-TZ2 1/4x2-1/2 SS304	2-1/2	C	1 1/4	1-3/4	0	1/2	-	-	-	-	-	-	100
KB-TZ2 1/4x3-1/4 SS304	3-1/4	D	2	1-3/4	0	1-1/4	-	-	-	-	-	-	100
KB-TZ2 1/4x4-1/2 SS304	4-1/2	G	3	1-3/4	1/8	2-1/2	-	-	-	-	-	-	100
KB-TZ2 3/8x2-1/2 SS304	2-1/2	C	1	1-7/8	0	1/4	-	-	-	-	-	-	50
KB-TZ2 3/8x3 SS304	3	D	1 1/2	1-7/8	0	3/4	2-1/2	0	1/4	-	-	-	50
KB-TZ2 3/8x3-1/2 SS304	3-1/2	Ω	2	1-7/8	0	1-1/4	2-1/2	0	3/4	3	0	1/4	50
KB-TZ2 3/8x3-3/4 SS304	3-3/4	E	2 1/4	1-7/8	0	1-1/2	2-1/2	0	1	3	0	1/2	50
KB-TZ2 3/8x5 SS304	5	H	3 1/2	1-7/8	0	2-3/4	2-1/2	0	2-1/4	3	0	1-3/4	50
KB-TZ2 3/8x7 SS304	7	L	4 7/8	1-7/8	1/2	4-3/4	2-1/2	0	4-1/4	3	0	3-3/4	50
KB-TZ2 1/2x3-3/4 SS304	3-3/4	E	1 5/8	2-1/2	0	3/4	3	0	1/4	-	-	-	20
KB-TZ2 1/2x4-1/2 SS304	4-1/2	G	2 3/8	2-1/2	0	1-1/2	3	0	1	3-3/4	0	1/4	20
KB-TZ2 1/2x5-1/2 SS304	5-1/2	I	3 3/8	2-1/2	0	2-1/2	3	0	2	3-3/4	0	1-1/4	20
KB-TZ2 1/2x7 SS304	7	L	4 3/4	2-1/2	1/8	4	3	0	3-1/2	3-3/4	0	2-3/4	20
KB-TZ2 5/8x4-1/4 SS304	4-1/4	F	2 1/4	3-1/4	0	3/8	-	-	-	-	-	-	15
KB-TZ2 5/8x4-3/4 SS304	4-3/4	G	2 3/4	3-1/4	0	7/8	3-3/4	0	3/8	-	-	-	15
KB-TZ2 5/8x6 SS304	6	J	4	3-1/4	0	2-1/8	3-3/4	0	1-5/8	4-1/2	0	7/8	15
KB-TZ2 5/8x7 SS304	7	L	4 7/8	3-1/4	0	3-1/8	3-3/4	0	2-5/8	4-1/2	0	1-7/8	15
KB-TZ2 5/8x8-1/2 SS304	8-1/2	O	6 1/2	3-1/4	0	4-5/8	3-3/4	0	4-1/8	4-1/2	0	3-3/8	15
KB-TZ2 5/8x10 SS304	10	R	7 1/8	3-1/4	1/8	6-1/8	3-3/4	0	5-5/8	4-1/2	0	4-7/8	15
KB-TZ2 3/4x4-3/4 SS304	4-3/4	G	1 3/4	4	0	1/8	-	-	-	-	-	-	10
KB-TZ2 3/4x5-1/2 SS304	5-1/2	I	2 1/2	4	0	7/8	4-1/2	0	3/8	-	-	-	10
KB-TZ2 3/4x6-1/4 SS304	6-1/4	J	3 1/4	4	0	1-5/8	4-1/2	0	1-1/8	5-1/2	0	1/8	10
KB-TZ2 3/4x7 SS304	7	L	4	4	0	2-3/8	4-1/2	0	1-7/8	5-1/2	0	7/8	10
KB-TZ2 3/4x8 SS304	8	N	5	4	0	3-3/8	4-1/2	0	2-7/8	5-1/2	0	1-7/8	10
KB-TZ2 3/4x9 SS304	9	P	6	4	0	4-3/8	4-1/2	0	3-7/8	5-1/2	0	2-7/8	10
KB-TZ2 3/4x10 SS304	10	R	7	4	0	5-3/8	4-1/2	0	4-7/8	5-1/2	0	3-7/8	10
KB-TZ2 3/4x12 SS304	12	T	7	4	1-5/8	7-3/8	4-1/2	1-1/8	6-7/8	5-1/2	1/8	5-7/8	10
KB-TZ2 1x6-1/2 SS304	6-1/2	K	2 1/2	4-5/8	0	7/8	6-3/8	-	-	-	-	-	10
KB-TZ2 1x8 SS304	8	N	3 7/8	4-5/8	0	2-3/8	6-3/8	0	7/8	-	-	-	10
KB-TZ2 1x9 SS304	9	P	3 7/8	4-5/8	1	3-3/8	6-3/8	0	1-7/8	-	-	-	10
KB-TZ2 1x10-1/2 SS304	10-1/2	R	6	4 5/8	1/2	4-7/8	6-3/8	0	3-3/8	-	-	-	10
KB-TZ2 1x12 SS304	12	T	6	4 5/8	2	6-3/8	6-3/8	1/4	4-7/8	-	-	-	10

Table 54 — Hilti KB-TZ2 SS316 product portfolio

Description	Length (in)	Length ident. letter	Thread length (in)	Nominal embed. 1 (in)	Min. fixture thickness 1 (in)	Max. fixture thickness 1 (in)	Nominal embed. 2 (in)	Min. fixture thickness 2 (in)	Max. fixture thickness 2 (in)	Nominal embed. 3 (in)	Min. fixture thickness 3 (in)	Max. fixture thickness 3 (in)	Package quantity
KB-TZ2 1/4x2-1/2 SS316	2-1/2	C	1-1/4	1-3/4	0	1/2	-	-	-	-	-	-	100
KB-TZ2 1/4x3-1/4 SS316	3-1/4	D	2	1-3/4	0	1-1/4	-	-	-	-	-	-	100
KB-TZ2 1/4x4-1/2 SS316	4-1/2	G	3	1-3/4	1/8	2-1/2	-	-	-	-	-	-	100
KB-TZ2 3/8x2-1/2 SS316	2-1/2	C	1	1-7/8	0	1/4	-	-	-	-	-	-	50
KB-TZ2 3/8x3 SS316	3	D	1-1/2	1-7/8	0	3/4	2-1/2	0	1/4	-	-	-	50
KB-TZ2 3/8x3-1/2 SS316	3-1/2	Ω	2	1-7/8	0	1-1/4	2-1/2	0	3/4	3	0	1/4	50
KB-TZ2 3/8x3-3/4 SS316	3-3/4	E	2-1/4	1-7/8	0	1-1/2	2-1/2	0	1	3	0	1/2	50
KB-TZ2 3/8x5 SS316	5	H	3-1/2	1-7/8	0	2-3/4	2-1/2	0	2-1/4	3	0	1-3/4	50
KB-TZ2 3/8x7 SS316	7	L	4-7/8	1-7/8	1/2	4-3/4	2-1/2	0	4-1/4	3	0	3-3/4	50
KB-TZ2 1/2x3-3/4 SS316	3-3/4	E	1-5/8	2-1/2	0	3/4	3	0	1/4	-	-	-	20
KB-TZ2 1/2x4-1/2 SS316	4-1/2	G	2-3/8	2-1/2	0	1-1/2	3	0	1	3-3/4	0	1/4	20
KB-TZ2 1/2x5-1/2 SS316	5-1/2	I	3-3/8	2-1/2	0	2-1/2	3	0	2	3-3/4	0	1-1/4	20
KB-TZ2 1/2x7 SS316	7	L	4-3/4	2-1/2	1/8	4	3	0	3-1/2	3-3/4	0	2-3/4	20
KB-TZ2 1/2x8-1/2 SS316	8-1/2	O	4-7/8	2-1/2	1-1/2	5-1/2	3	1	5	3-3/4	1/4	4-1/4	20
KB-TZ2 1/2x10 SS316	10	R	4-7/8	2-1/2	3	7	3	2-1/2	6-1/2	3-3/4	1-3/4	5-3/4	20
KB-TZ2 5/8x4-1/4 SS316	4-1/4	F	2-1/4	3-1/4	0	3/8	-	-	-	-	-	-	15
KB-TZ2 5/8x4-3/4 SS316	4-3/4	G	2-3/4	3-1/4	0	7/8	3-3/4	0	3/8	-	-	-	15
KB-TZ2 5/8x6 SS316	6	J	4	3-1/4	0	2-1/8	3-3/4	0	1-5/8	4-1/2	0	7/8	15
KB-TZ2 5/8x7 SS316	7	L	4-7/8	3-1/4	0	3-1/8	3-3/4	0	2-5/8	4-1/2	0	1-7/8	15
KB-TZ2 5/8x8-1/2 SS316	8-1/2	O	6-1/2	3-1/4	0	4-5/8	3-3/4	0	4-1/8	4-1/2	0	3-3/8	15
KB-TZ2 5/8x10 SS316	10	R	7-1/8	3-1/4	1/8	6-1/8	3-3/4	0	5-5/8	4-1/2	0	4-7/8	15
KB-TZ2 3/4x4-3/4 SS316	4-3/4	G	1-3/4	4	0	1/8	-	-	-	-	-	-	10
KB-TZ2 3/4x5-1/2 SS316	5-1/2	I	2-1/2	4	0	7/8	4-1/2	0	3/8	-	-	-	10
KB-TZ2 3/4x6-1/4 SS316	6-1/4	J	3-1/4	4	0	1-5/8	4-1/2	0	1-1/8	5-1/2	0	1/8	10
KB-TZ2 3/4x7 SS316	7	L	4	4	0	2-3/8	4-1/2	0	1-7/8	5-1/2	0	7/8	10
KB-TZ2 3/4x8 SS316	8	N	5	4	0	3-3/8	4-1/2	0	2-7/8	5-1/2	0	1-7/8	10
KB-TZ2 3/4x9 SS316	9	P	6	4	0	4-3/8	4-1/2	0	3-7/8	5-1/2	0	2-7/8	10
KB-TZ2 3/4x10 SS316	10	R	7	4	0	5-3/8	4-1/2	0	4-7/8	5-1/2	0	3-7/8	10
KB-TZ2 3/4x12 SS316	12	T	7	4	1-5/8	7-3/8	4-1/2	1-1/8	6-7/8	5-1/2	1/8	5-7/8	10

Figure 9 — Anchor head with length identification code and KB-TZ2 head notch embossment

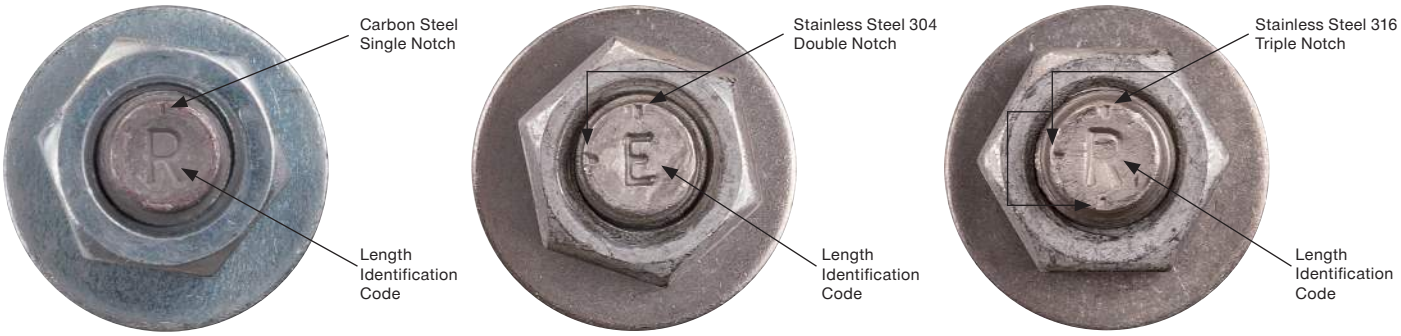

Victaulic® Grooved End Fittings

No. 20 Tee

No. 10 Elbow

1.0 PRODUCT DESCRIPTION

Available Sizes

- ¾ – 60"/DN20 – DN1500

Maximum Working Pressure

- Pressure ratings for Victaulic standard fittings conform to the ratings of Victaulic Style 177N couplings (refer to publication 06.24 for more information).

Application

- Connects pipe, provides change in direction and adapts sizes or components
- Supplied with Victaulic OGS grooves
- Exclusively for use with Victaulic couplings, valves, accessories and pipe which feature ends formed with the Victaulic OGS groove profile

Pipe Materials

- Carbon steel or stainless steel

NOTE

- These fittings are not intended for use with Victaulic plain end couplings. Intended for use only in grooved piping systems. When connecting wafer or lug type butterfly valves directly to Victaulic fittings using Style 741 or Style 743 flange adapters, be sure to check disc clearance dimensions with I.D. dimension of fitting.

ALWAYS REFER TO ANY NOTIFICATIONS AT THE END OF THIS DOCUMENT REGARDING PRODUCT INSTALLATION, MAINTENANCE OR SUPPORT.

System No.		Location	
Submitted By		Date	

Spec Section		Paragraph	
Approved		Date	

 © 2021 Victaulic Company. All rights reserved.

1.0 PRODUCT DESCRIPTION (CONTINUED)

Other Fitting Styles

AGS - Advanced Groove System
from 14 – 60"/DN350 – DN1500
Publication 20.05

Stainless Steel
Publication 17.16

Galvanized
Publication 07.01 for Original Groove Fittings
Publication 20.05 for AGS Fittings

Extra Heavy EndSeal "ES"
Publication 07.03

Copper
Publication 22.04

Ductile Iron for AWWA size pipe
Publication 23.05

XL fittings for abrasive services
Publication 07.07

Aluminum
Publication 21.03

Shouldered Ends
Publication 07.06

Plain End
Publication 14.04

 © 2021 Victaulic Company. All rights reserved.

2.0 CERTIFICATION/LISTINGS

NOTES

- When supplied as "hot dip galvanized" the following fittings are UL Classified in accordance with ANSI/NSF 61 and for use on cold +86°F/+30°C potable water service and ANSI/NSF 372: No. 10 90° Elbow, No. 11 45° Elbow, No. 12 22½° Elbow, No. 13 11¼° Elbow, No. 100 90° Long Radius Elbow, No. 110 45° Long Radius Elbow, No. 20 Tee, No. 25 Tee with Grooved Branch, No. 30 45° Lateral, No. 60 Cap, No. 50 Concentric Reducers, No. 51 Eccentric Reducers.
- The following Victaulic fittings are VdS approved: No.10 90° Elbow, No.11 45° Elbow, No.20 Tee and No.60 Cap.
- The following Victaulic fittings are LPCB approved: No.10 90° Elbow, No.11 45° Elbow, No.12 22½ Elbow, No.13 11¼° Elbow, No.30 45° Lateral, No.30-R Reducing Lateral, No.100 Long Radius Elbow, No.110 Long Radius Elbow, No.20 Tee, No.35 Cross, No.60 Cap, No.25 Reducing Tee, No.33 True Wye, No.50 Concentric Reducer, No.51 Eccentric Reducer and No.29M Tee with Threaded Branch.
- The following Victaulic fittings are FM approved: No.10 90° Elbow, No.11 45° Elbow, No.12 22½ Elbow, No.13 11¼° Elbow, No.30 45° Lateral, No.100 Long Radius Elbow, No.20 Tee, No.35 Cross, No.60 Cap, No.25 Reducing Tee and No.50 Concentric Reducer.

3.0 SPECIFICATIONS - MATERIAL

Fitting: (specify choice)

- ☐ Standard: Ductile iron conforming to ASTM A536, Grade 65-45-12.
- ☐ Optional: Segmentally welded steel as shown under nipples

Nipples: (specify choice)

- ☐ ¾ – 4"/DN20 – DN100: Carbon steel, Schedule 40, conforming to ASTM A53, Type F
- ☐ 5 – 6"/DN125 – DN150: Carbon steel, Schedule 40, conforming to ASTM A53, Type E or S, Gr. B
- ☐ 8 – 12"/DN200 – DN300: Carbon steel, Schedule 30 or 40, conforming to ASTM A53, Type E or S, Gr. B

Flanged Adapter Nipples: (specify choice)

- ☐ Class 125 Flange: Cast iron conforming to ANSI B16.1
- ☐ Class 150 Flange: Carbon steel conforming to ANSI B16.5, raised or flat face
- ☐ Class 300 Flange: Carbon steel conforming to ANSI B16.5, raised or flat face

Fitting Coating: (specify choice)

- ☐ Standard: Orange enamel
- ☐ Optional: Hot dip galvanized and others. Some fittings supplied electroplated as standard – see product specifications

Flanged Adapter Nipple Coating: (specify choice)

- ☐ Standard: None (Unfinished)
- ☐ Optional: Orange enamel, hot dip galvanized and others

 © 2021 Victaulic Company. All rights reserved.

4.0 DIMENSIONS

Elbows

No. 10 90° Elbow
No. 11 45° Elbow
No. 12 22 ½° Elbow
No. 13 11 ¼° Elbow
No. 100 90° Long Radius Elbow
No. 110 45° Long Radius Elbow

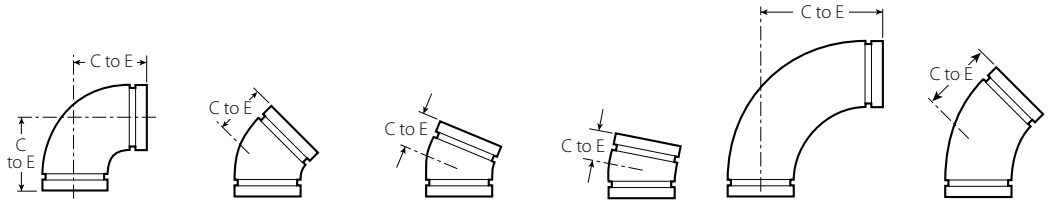

Standard and GSNK

Size		No. 10 90° Elbow		No. 11 45° Elbow		No. 12 22 ½° Elbow		No. 13 11 ¼° Elbow		No. 100 90° Long Radius Elbow		No. 110 45° Long Radius Elbow	
Nominal inches DN	Actual Outside Diameter inches mm	C to E inches mm	Approx. Wgt. (Each) lb kg	C to E inches mm	Approx. Wgt. (Each) lb kg	C to E inches mm	Approx. Wgt. (Each) lb kg	C to E inches mm	Approx. Wgt. (Each) lb kg	C to E inches mm	Approx. Wgt. (Each) lb kg	C to E inches mm	Approx. Wgt. (Each) lb kg
¾ DN20	1.050 26.9	2.25 57	0.5 0.2	1.50 38	0.5 0.2	1.63 (sw) 41	—	1.38 (sw) 35	—	2.50 (sw) 64	0.4 0.2	1.88 (sw) 48	0.3 0.1
1 DN25	1.315 33.7	2.25 57	0.6 0.3	1.75 44	0.6 0.3	3.25[1] 83	0.6 0.3	1.38 (sw) 35	0.3 0.1	2.88 (sw) 73	0.6 0.3	2.25 (sw) 57	0.5 0.2
1 ¼ DN32	1.660 42.4	2.75 70	1.0 0.5	1.75 44	0.9 0.4	1.75 44	0.8 0.4	1.38 (sw) 35	0.5 0.2	3.25 (sw) 83	1.1 0.5	2.38 (sw) 60	0.7 0.3
1 ½ DN40	1.900 48.3	2.75 70	1.2 0.5	1.75 44	0.9 0.4	1.75 44	0.8 0.4	1.38 (sw) 35	0.5 0.2	3.63 (sw) 92	2.2 1.0	2.50 (sw) 64	1.3 0.6
2 DN50	2.375 60.3	3.25 83	1.8 0.8	2.00 51	1.3 0.6	1.88 48	1.2 0.5	1.38 35	1.0 0.5	4.38 111	2.5 1.1	2.75 70	1.8 0.8
2 ½	2.875 73.0	3.75 95	3.2 1.5	2.25 57	2.2 1.0	4.00[1] 102	2.3 1.0	1.50 38	1.1 0.5	5.13 130	3.4 1.5	3.00 76	2.8 1.3
DN65	3.000 76.1	3.75 95	3.7 1.7	2.25 57	3.4 1.5	2.25 57	—	1.50 38	—	—	—	—	—
3 DN80	3.500 88.9	4.25 108	4.5 2.0	2.50 64	3.1 1.4	4.50[1] 114	3.1 1.4	1.50 38	2.1 1.0	5.88 149	6.0 2.7	3.38 86	4.9 2.2
3 ½ DN90	4.000 101.6	4.50 114	5.6 2.5	2.75 70	4.3 2.0	2.50 (sw) 64	4.0 1.8	1.75 (sw) 44	2.7 1.2	—	—	—	—
4 DN100	4.500 114.3	5.00 127	7.1 3.2	3.00 76	5.6 2.5	2.88 73	5.6 2.5	1.75 44	3.6 1.6	7.50 191	12.3 5.6	4.00 102	7.3 3.3
	4.250 108.0	5.00 127	11.0 5.0	3.00 76	5.6 2.5	—	—	—	—	—	—	—	—
	5.000 127.0	5.25 (sw) 133	10.0 4.5	3.13 (sw) 79	6.0 2.7	3.50 (sw) 89	6.6 3.0	1.88 (sw) 48	4.2 1.9	—	—	—	—
5	5.563 141.3	5.50 140	11.7 5.3	3.25 83	8.3 3.8	2.88 (sw) 73	7.8 3.5	2.00 (sw) 51	5.0 2.2	9.25 (sw) 235	18.0 8.2	4.88 (sw) 124	14.8 6.7
	5.250 133.0	5.50 140	11.7 5.3	3.25 83	8.3 3.8	—	—	—	—	—	—	—	—
DN125	5.500 139.7	5.50 140	11.7 5.3	3.25 83	8.3 3.8	2.88 73	—	2.00 51	—	—	—	—	—
6 DN150	6.625 168.3	6.50 165	17.2 7.8	3.50 89	10.8 4.9	6.25[1] 159	12.2 5.5	2.00 51	7.0 3.2	10.75 273	30.4 13.8	5.50 140	17.4 7.9
	6.250 159.0	6.50 165	18.6 8.4	3.50 89	10.8 4.9	—	—	—	—	—	—	—	—
	6.500 165.1	6.50 165	15.5 7.0	3.50 89	9.8 4.4	3.13 79	11.4 5.2	2.00 51	7.4 3.4	10.75 (sw) 273	29.0 13.2	5.50 (sw) 140	19.0 8.6

[1] Gooseneck design, end-to-end dimension fittings in this size, contact your nearest Victaulic sales representative.

(s) = Carbon Steel Direct Roll Groove (OGS)

(sw) = Carbon Steel Segmentally Welded

NOTE

- All fittings are ductile iron unless otherwise noted with an (sw) or (s).

 © 2021 Victaulic Company. All rights reserved.

4.1 DIMENSIONS

Reducing Base Support Elbow

No. R-10G Grv. × Grv.
No. R-10F Grv. × Flange

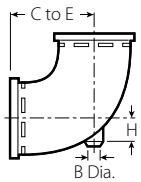

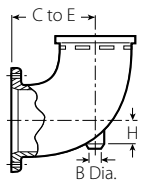

Size			No. R-10 Reducing Base Support Elbow			Approx. Weight Each	
Nominal inches DN			C to E inches mm	H inches mm	B Diameter inches mm	Grv. x Grv. lb kg	Grv. x Flange lb kg
6 DN150	x	4 DN100	9.00 229	1.25 32	1.50 38	19.0 8.6	33.0 15.0
		5	9.00 229	1.50 38	1.50 38	23.0 10.4	38.0 17.2
8 DN200	x	6 DN150	10.50 267	2.13 24	1.50 38	33.0 15.0	52.0 23.6
10 DN250	x	8 DN200	12.00 305	2.40 61	1.50 38	61.0 27.7	88.0 39.9

4.2 DIMENSIONS

Adapter Elbow

No. 18 90° Adapter Elbow
No. 19 45° Adapter Elbow

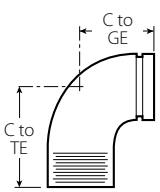

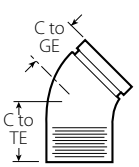

Size		No. 18 90° Adapter Elbow			No. 19 45° Adapter Elbow		
Nominal inches DN	Actual Outside Diameter inches mm	C to GE inches mm	C to TE inches mm	Approximate Weight (Each) lb kg	C to GE inches mm	C to TE inches mm	Approx. Weight (Each) lb kg
¾ DN20	1.050 26.9	2.25 57	2.25 57	0.5 0.2	1.50 38	1.50 38	0.5 0.2
1 DN25	1.315 33.7	2.25 57	2.25 57	0.5 0.2	—	—	—
1 ¼ DN32	1.660 42.4	2.75 70	2.75 70	0.9 0.4	—	—	—
1½ DN40	1.900 48.3	2.75 70	2.75 70	1.1 0.5	1.75 44	1.75 44	0.9 0.4
2 DN50	2.375 60.3	3.25 83	4.25 108	2.5 1.1	—	—	—
2½	2.875 73.0	3.75 95	3.75 95	3.0 1.4	2.25 57	2.25 57	2.3 1.0
3 DN80	3.500 88.9	4.25 108	6.00 152	5.8 2.6	2.50 64	4.25 108	5.0 2.3
3½ DN90	4.000 101.6	4.50 114	6.25 159	8.0 3.6	5.25 133	5.25 133	8.8 4.0
6 DN150	6.625 168.3	6.50 165	6.50 165	17.6 8.0	3.50 89	3.50 89	12.7 5.8

NOTE

- Available with British Standard Pipe Threads, specify “BSP” clearly on order.

 © 2021 Victaulic Company. All rights reserved.

4.3 DIMENSIONS

Tees, Crosses and True Wyes

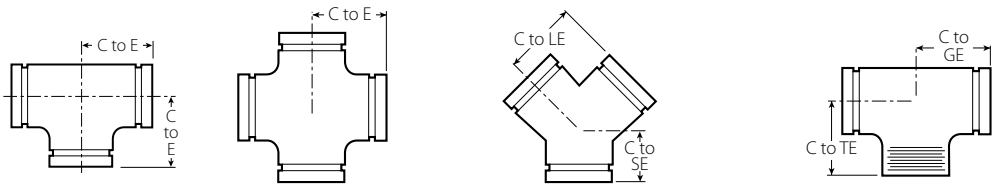

Size		No. 20 Tee		No. 35 Cross (sw)		No. 33 True Wye (sw)			No. 29M Tee with Threaded Branch		
Nominal inches DN	Actual Outside Dimeter inches mm	C to E inches mm	Approx. Weight (Each) lb kg	C to E inches mm	Approx. Weight (Each) lb kg	C to LE inches mm	C to SE inches mm	Approx. Weight (Each) lb kg	C to GE inches mm	C to TE inches mm	Approx. Weight (Each) lb kg
¾ DN20	1.050 26.9	2.25 57	0.6 0.3	2.25 57	0.9 0.4	2.25 57	2.00 51	0.7 0.3	2.25 57	2.25 (sw) 57	0.6 0.3
1 DN25	1.315 33.7	2.25 57	1.0 0.5	2.25 57	1.3 0.6	2.25 57	2.25 57	1.1 0.5	2.25 57	2.25 57	1.0 0.5
1 ¼ DN32	1.660 42.4	2.75 70	1.5 0.7	2.75 70	2.1 1.0	2.75 70	2.50 64	1.5 0.7	2.75 70	2.75 70	1.5 0.7
1½ DN40	1.900 48.3	2.75 70	2.0 0.9	2.75 70	2.5 1.1	2.75 70	2.75 70	1.8 0.8	2.75 70	2.75 70	2.0 0.9
2 DN50	2.375 60.3	3.25 83	3.0 1.4	3.25 83	3.8 1.7	3.25 83	2.75 70	2.5 1.1	3.25 83	4.25 108	3.0 1.4
2½	2.875 73.0	3.75 95	4.3 2.0	3.75 95	6.1 2.8	3.75 95	3.00 76	4.3 2.0	3.75 95	3.75 95	4.3 2.0
DN65	3.000 76.1	3.75 95	5.2 2.4	—	—	—	—	—	3.75 95	3.75 (sw) 95	5.2 2.4
3 DN80	3.500 88.9	4.25 108	6.8 3.0	4.25 108	10.5 4.8	4.25 108	3.25 83	6.1 2.8	4.25 108	6.00 152	6.8 3.1
3½ DN90	4.000 101.6	4.50 (sw) 114	7.9 3.6	4.50 114	11.5 5.2	4.50 114	3.50 89	9.6 4.4	4.50 114	4.50 (sw) 114	7.9 3.6
	4.250 108.0	5.00 127	15.5 7.0	—	—	—	—	—	5.00 127	5.00 (sw) 127	15.5 7.0
4 DN100	4.500 114.3	5.00 127	11.9 5.4	5.00 127	15.8 7.2	5.00 127	3.75 95	9.8 4.4	5.00 127	7.25 184	11.9 5.4
	5.000 127.0	5.25 (sw) 133	15.0 6.8	5.25 133	18.5 8.4	—	—	—	5.25 133	5.25 (sw) 133	15.0 6.8
	5.250 133.0	5.50 140	17.8 8.1	—	—	—	—	—	5.50 140	5.50 (sw) 140	17.8 8.1
DN125	5.500 139.7	5.50 140	17.8 8.1	—	—	—	—	—	5.50 140	5.50 (sw) 140	17.8 8.1
5	5.563 141.3	5.50 140	17.8 8.1	5.50 140	20.0 9.1	5.50 140	4.00 102	15.0 6.8	5.50 140	5.50 (sw) 140	17.8 8.1
	6.250 159.0	6.50 165	27.1 12.3	—	—	—	—	—	6.50 165	6.50 (sw) 165	27.1 12.3
	6.500 165.1	6.50 165	22.0 10.0	6.50 165	28.0 12.7	—	—	—	6.50 165	6.50 (sw) 165	22.0 10.0
6 DN150	6.625 168.3	6.50 165	25.7 11.7	6.50 165	28.0 12.7	6.50 165	4.50 114	22.3 10.1	6.50 165	6.50 (sw) 165	25.7 11.7
8 DN200	8.625 219.1	7.75 197	47.6 21.6	7.75 197	48.0 21.8	7.75 197	6.00 152	36.0 16.3	7.75 197	7.75 197	47.6 21.6
10 DN250	10.750 273.0	9.00 229	99.0 44.9	9.00 229	121.5 55.1	9.00 229	6.50 155	69.9 31.7	9.00 229	9.00 229	99.0 44.9
12 DN300	12.750 323.9	10.00 254	133.0 60.3	10.00 254	110.0 49.9	10.00 254	7.00 178	80.0 36.3	10.00 254	10.00 254	133.0 60.3

(s) = Carbon Steel Direct Roll Groove (OGS)

(sw) = Carbon Steel Segmentally Welded

NOTE

- All fittings are ductile iron unless otherwise noted with an (sw) or (s).

 © 2021 Victaulic Company. All rights reserved.

4.4 DIMENSIONS

Reducing Tee

No. 25 Grooved Branch
No. 29T Threaded Branch

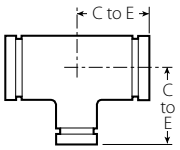

No. 25

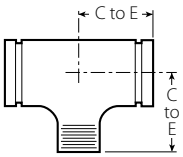

No. 29T

Size					No. 25 Std.	No. 29T w/ Thd. Branch	Approx. Weight (Each)
Nominal inches DN					C to E inches mm	C to E inches mm	lb kg
1 DN25	x	1 DN25	x	¾ DN20	2.25 (sw) 57	2.25 (sw) 57	1.0 0.5
1 ¼ DN32	x	1 ¼ DN32	x	1 DN25	2.75 (sw) 70	2.75 (sw) 70	1.3 0.6
1 ½ DN40	x	1 ½ DN40	x	¾ DN20	2.75 (sw) 70	2.75 (sw) 70	1.5 0.7
				1 DN25	2.75 (sw) 70	2.75 (sw) 70	1.5 0.7
				1 ¼ DN32	2.75 (sw) 70	2.75 (sw) 70	1.7 0.8
2 DN50	x	2 DN50	x	¾ DN20	3.25 83	3.25 83	2.5 1.1
				1 DN25	3.25 83	3.25 83	2.7 1.2
				1 ¼ DN32	3.25 (sw) 83	3.25 (sw) 83	1.8 0.8
				1 ½ DN40	3.25 83	3.25 (sw) 83	3.0 1.4
2 ½	x	2 ½	x	¾ DN20	3.75 (sw) 95	3.75 (sw) 95	3.9 1.8
				1 DN25	3.75 95	3.75 (sw) 95	3.8 1.7
				1 ¼ DN32	3.75 95	3.75 95	4.2 1.7
				1 ½ DN40	3.75 95	3.75 95	3.9 1.8
				2 DN50	3.75 95	3.75 (sw) 95	4.5 2.0
3 DN80	x	3 DN80	x	¾ DN20	4.25 (sw) 108	4.25 (sw) 108	5.7 2.6
				1 DN25	4.25 108	4.25 108	6.1 2.8
				1 ¼ DN32	4.25 108	4.25 108	8.0 3.6
				1 ½ DN40	4.25 108	4.25 (sw) 108	6.5 2.9
				2 DN50	4.25 108	4.25 (sw) 108	6.2 2.8
				2 ½	4.25 108	4.25 (sw) 108	6.4 2.9

(s) = Carbon Steel Direct Roll Groove (OGS)
(sw) = Carbon Steel Segmentally Welded

NOTE

- Cast fitting available. Contact Victaulic for details.

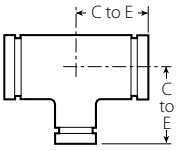

No. 25

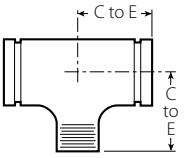

No. 29T

Size					No. 25 Std.	No. 29T w/ Thd. Branch	Approx. Weight (Each)
Nominal inches DN					C to E inches mm	C to E inches mm	lb kg
4 DN100	x	4 DN100	x	¾ DN20	5.00 (sw) 127	5.00 (sw) 127	8.0 3.6
				1 DN25	5.00 127	5.00 127	7.8 3.5
				1 ¼ DN32	5.00 (sw) 127	5.00 (sw) 127	9.6 4.4
				1 ½ DN40	5.00 127	5.00 127	10.2 4.6
				2 DN50	5.00 127	5.00 127	11.2 5.1
				2 ½	5.00 127	5.00 127	11.4 5.2
				3 DN80	5.00 127	5.00 127	11.6 5.3
5	x	5	x	1 DN25	5.50 (sw) 140	5.50 (sw) 140	14.0 6.4
				1 ½ DN40	5.50 (sw) 140	5.50 (sw) 140	14.3 6.5
				2 DN50	5.50 (sw) 140	5.50 (sw) 140	14.5 6.6
				2 ½	5.50 140	5.50 (sw) 140	15.2 6.9
				3 DN80	5.50 140	5.50 (sw) 140	16.6 7.5
				4 DN100	5.50 140	5.50 (sw) 140	16.7 7.6
6 DN150	x	6 DN150	x	1 DN25	6.50 (sw) 165	6.50 (sw) 165	23.0 10.4
				1 ½ DN40	6.50 (sw) 165	6.50 (sw) 165	24.0 10.9
				2 DN50	6.50 165	6.50 165	21.6 9.8
				2 ½	6.50 165	6.50 165	21.4 11.7
				3 DN80	6.50 165	6.50 165	26.5 12.0
				4 DN100	6.50 165	6.50 165	25.0 11.3
				5	6.50 165	6.50 165	23.2 10.5
6 ½	x	6 ½	x	3 DN80	6.50 165	6.50 (sw) 165	24.0 10.9
				4 DN100	6.50 165	6.50 (sw) 165	25.0 11.3

(s) = Carbon Steel Direct Roll Groove (OGS)
(sw) = Carbon Steel Segmentally Welded

NOTE

- Cast fitting available. Contact Victaulic for details.

 © 2021 Victaulic Company. All rights reserved.

4.10 DIMENSIONS

Cap

No. 60

No. 60

Size		No. 60 Cap	
Nominal inches DN	**Actual Outside Diameter** inches mm	**"T" Thickness** inches mm	**Approx. Weight (Each)** lb kg
¾ DN20	1.050 26.9	0.88 22	0.2 0.1
1 25	1.315 33.7	0.88 22	0.3 0.1
1 ¼ DN32	1.660 42.4	0.88 22	0.3 0.1
1 ½ DN40	1.900 48.3	0.88 22	0.5 0.2
2 DN50	2.375 60.3	0.88 22	0.6 0.3
2 ½	2.875 73.0	0.88 22	1.0 0.5
DN65	3.000 76.1	0.88 22	1.2 0.5
3 DN80	3.500 88.9	0.88 22	1.2 0.5
3 ½ DN90	4.000 101.6	0.88 22	2.5 1.1
	4.250 108.0	1.00 25	2.3 1.0
4 DN100	4.500 114.3	1.00 25	2.5 1.1
	5.250 133.0	1.00 25	4.5 2.0
DN125	5.500 139.7	1.00 25	4.5 2.0
5	5.563 141.3	1.00 25	4.6 2.1

No. 60

Size		No. 60 Cap	
Nominal inches DN	**Actual Outside Diameter** inches mm	**"T" Thickness** inches mm	**Approx. Weight (Each)** lb kg
	6.250 159.0	1.00 25	6.8 3.1
	6.500 165.1	1.00 25	7.3 3.3
6 DN150	6.625 168.3	1.00 25	6.1 2.8
8 DN200	8.625 219.1	1.19 30	13.1 5.9
10 DN250	10.750 273.0	1.25 32	21.0 9.5
12 DN300	12.750 323.9	1.25 32	35.6 16.2
14[2] DN350	14.000 355.6	9.50 (s) 241	+
16[2] DN400	16.000 406.4	10.00 (s) 254	+
18[2] DN450	18.000 457.0	11.00 (s) 279	+
20[2] DN500	20.000 508.0	12.00 (s) 305	+
24[2] DN600	24.000 610.0	13.50 (s) 343	+
14 – 60 DN350 – DN1500	**For AGS fitting information, see** publication 20.05 AGS™		

[2] For 14"/DN350 and larger roll grooved systems, Victaulic offers the Advanced Groove System (AGS). For pricing and availability of cut groove fittings in this size, contact your nearest Victaulic sales representative.

(s) = Carbon Steel Direct Roll Groove (OGS)

(sw) = Carbon Steel Segmentally Welded

+ Contact Victaulic for details.

NOTES

- No. 60 cap is not suitable for use in vacuum service with Style 72 or 750 couplings. No. 61 bull plugs should be used.
- All fittings are ductile iron unless otherwise noted with an (sw) or (s).

 © 2021 Victaulic Company. All rights reserved.

4.15 DIMENSIONS

Concentric/Eccentric Reducer

No. 50 Concentric
No. 51 Eccentric

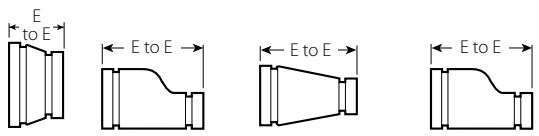

No. 50 | No. 51 | Fabricated Steel No. 50 | Fabricated Steel No. 51

Size			No. 50 Concentric Reducer		No. 51 Eccentric Reducer	
Nominal inches DN			E to E inches mm	Approx. Weight (Each) lb kg	E to E inches mm	Approx. Weight (Each) lb kg
1 ¼ DN32	x	¾ DN20	+	1.9 0.9	—	—
		1 DN25	+	1.9 0.9	—	—
1 ½ DN40	x	¾ DN20	+	1.4 0.6	—	—
		1 DN25	2.50 64	0.8 0.4	8.50 (sw) 216	4.5 2.0
		1¼ DN32	2.50 64	1.0 0.5	—	—
2 DN50	x	¾ DN20	2.50 64	0.9 0.3	9.00 (sw) 229	2.0 0.9
		1 DN25	2.50 64	0.7 0.3	9.00 (sw) 229	2.3 1.0
		1¼ DN32	2.50 64	1.2 0.5	9.00 (sw) 229	4.6 2.1
		1½ DN40	2.50 64	1.0 0.5	3.50 89	1.1 0.5
2 ½	x	¾ DN20	+	1.3 0.6	+	3.3 1.5
		1 DN25	2.50 64	1.1 0.5	9.50 241	3.5 1.6
		1 ¼ DN32	3.50 89	3.3 1.5	3.50 89	1.4 0.6
		1 ½ DN40	2.50 64	3.6 1.6	9.50 (sw) 241	3.7 1.7
		2 DN50	2.50 64	3.9 1.8	3.50 89	4.3 2.0
3 DN80	x	¾ DN20	+	1.5 0.7	+	4.5 2.0
		1 DN25	2.50 64	1.3 0.6	9.50 (sw) 241	4.8 2.2
		1 ¼ DN32	2.50 64	1.4 0.6	+	4.8 2.2
		1 ½ DN40	2.50 64	5.1 2.3	9.50 (sw) 241	5.1 2.3
		2 DN50	2.50 64	1.6 0.7	3.50 89	6.0 2.7
		2 ½	2.50 64	1.8 0.8	3.50 89	7.0 3.2
		DN65	2.50 64	2.1 1.0	—	—
3 ½ DN90	x	3 DN80	2.50 64	2.0 0.9	9.50 (sw) 241	7.0 3.2
4 DN100	x	1 DN25	3.00 76	3.0 1.4	13.00 (sw) 330	6.5 2.9

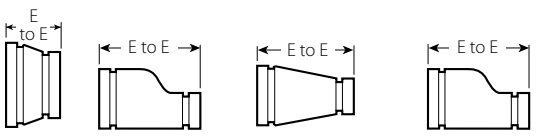

No. 50 | No. 51 | Fabricated Steel No. 50 | Fabricated Steel No. 51

Size			No. 50 Concentric Reducer		No. 51 Eccentric Reducer	
Nominal inches DN			E to E inches mm	Approx. Weight (Each) lb kg	E to E inches mm	Approx. Weight (Each) lb kg
		1 ¼ DN32	+	4.6 2.1	—	—
		1 ½ DN40	3.00 (sw) 76	2.6 1.2	10.00 (sw) 254	8.1 3.7
		2 DN50	3.00 76	2.4 1.1	4.00 102	3.3 1.5
		2 ½	3.00 76	2.7 1.2	4.00 102	3.4 1.5
		3 DN80	3.00 76	3.2 1.4	4.00 102	3.5 1.6
		3 ½ DN90	3.00 76	2.9 1.3	10.00 (sw) 254	8.0 3.6
5	x	2 DN50	11.00 (sw) 279	9.0 4.1	11.00 (sw) 279	5.2 2.4
		2 ½	4.00 102	4.3 2.0	11.00 (sw) 279	10.8 4.9
		3 DN80	4.00 102	5.5 2.5	11.00 (sw) 279	11.1 5.0
		4 DN100	3.50 89	4.3 1.9	5.00 127	12.0 5.4
6 DN150	x	1 DN25	4.00 102	5.0 2.3	11.50 (sw) 292	14.5 6.6
		1 ½ DN40	+	5.5 2.5	+	+
		2 DN50	4.00 102	6.6 3.0	11.50 (sw) 292	14.5 6.6
		2 ½	4.00 102	6.4 2.9	11.50 (sw) 292	14.2 6.4
		3 DN80	4.00 102	6.4 2.9	5.50 140	15.0 6.8
		4 DN100	4.00 102	6.5 2.9	5.50 140	17.0 7.7
		5	4.00 102	6.4 2.9	5.50 140	17.0 7.7
8 DN200	x	2 ½	16.00 406	7.9 3.6	12.00 (sw) 305	26.1 11.8
		3 DN80	5.00 127	9.3 4.2	12.00 (sw) 305	22.0 10.0
		4 DN100	5.00 127	10.4 4.8	12.00 (sw) 305	23.0 10.4
		5	5.00 127	11.6 5.2	12.00 (sw) 305	23.0 10.4
		6 DN150	5.00 127	11.9 5.4	6.00 152	24.0 10.9

 © 2021 Victaulic Company. All rights reserved.

The following excerpt are pages from the North American Product Technical Guide, Volume 2: Anchor Fastening, Edition 22.

Please refer to the publication in its entirety for complete details on this product including data development, product specifications, general suitability, installation, corrosion and spacing and edge distance guidelines.
US&CA: https://submittals.us.hilti.com/PTGVol2/

To consult directly with a team member regarding our anchor fastening products, contact Hilti's team of technical support specialists between the hours of 7:00am – 6:00pm CST.
US: 877-749-6337 or HNATechnicalServices@hilti.com
CA: 1-800-363-4458, ext. 6 or CATechnicalServices@hilti.com

Hilti, Inc.
7250 Dallas Parkway, Suite 1000
Plano, TX 75024

1-800-879-8000
www.hilti.com

3.3.5 KWIK BOLT TZ2 EXPANSION ANCHOR

PRODUCT DESCRIPTION

KWIK BOLT TZ2 Expansion anchor

Anchor System	Features and Benefits
Carbon steel KB-TZ2 Stainless Steel 304/316 KB-TZ2	• IFU provides multiple installation methods including no hole cleaning with hammer drill, Hilti Dust Removal System (DRS) for virtually dustless installation (OSHA 1926.1153 Table 1 compliant) and core drilling installation. • More accurate SafeSet™ installation when using the Hilti SIW-6AT-A22 impact wrench and the SI-AT-A22 Adaptive Torque Module. • Product and length identification marks help facilitate quality control after installation. • Maximized thread lengths and multiple embedment depths to accommodate various base plate thicknesses. • Mechanical expansion allows immediate load application. • Raised impact section (dog point) helps protect threads from damage during installation. • Bolt meets ductility requirements of ACI 318 Section 2.3. • Functional coatings and profile on expansion wedges provide increased reliability.

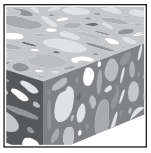
Uncracked concrete

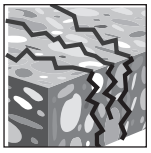
Cracked concrete

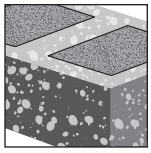
Grout-filled concrete masonry

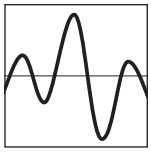
Seismic Design Categories A-F

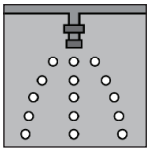
Fire sprinkler listings

Profis Engineering design software

Hollow Drill Bit and Adaptive Torque Tool (AT)

Approvals/ Listings

ICC-ES (International Code Council) • 2021 International Building Code / International Residential Code (IBC/IRC) • 2015 National Building Code of Canada (NBC-C)	ESR-4266 in concrete per ACI 318 Ch. 17 / ACI 355.2/ ICC-ES AC193 ESR-4561 in grout-filled CMU per ICC-ES AC01 ELC-4266 in concrete per CSA A23.3 / ACI 355.2
City of Los Angeles	2020 LABC Supplement (within ESR-4266 & ESR-4561)
Florida Building Code	2020 FBC Supplement with HVHZ (within ESR-4266 & ESR-4561)
FM (Factory Mutual) — Carbon steel KB-TZ2 only	Pipe hanger components for automatic sprinkler systems 3/8 (up to 4-inch nominal pipe diameter) 1/2[1] (up to 8-inch nominal pipe diameter) 3/4 (up to 12-inch nominal pipe diameter)
UL and cUL (Underwriters Laboratory) — Carbon steel KB-TZ2 only	Pipe hanger equipment for fire protection services 3/8 (up to 4-inch nominal pipe diameter) 1/2[1] (up to 8-inch nominal pipe diameter) 5/8 & 3/4 (up to 12-inch nominal pipe diameter)
ANSI/MSS SP-58-2018	Anchors conform to ANSI/MSSP-58-2018. Contact Hilti for more information.

1 1/2-inch dia. with 1-1/2-inch effective embedment does not have FM or UL certification.

FM APPROVED

CLASSIFIED c UL us LISTED
Pipe Hanger 757G

MATERIAL SPECIFICATIONS

Carbon steel with electroplated zinc-nickel plating

- Carbon steel anchor components plated in accordance with ASTM F1941 to a minimum thickness of 5 µm.
- Nuts conform to the requirements of ASTM A563, Grade A, Hex.
- Washers meet the requirements of ASTM F844.
- Expansion sleeves (wedges) are manufactured from carbon or stainless steel.
- Nuts and bolts are finished with a proprietary coating. Only Hilti KB-TZ2 nuts can be used with KB-TZ2 bolts.
- Carbon steel bolts are manufactured from carbon steel.

Stainless steel

- All nuts and washers for type 304 anchors are made from type 304 stainless.
- All nuts and washers for type 316 anchors are made from type 316 stainless.
- Nuts meet the dimensional requirements of ASTM F594.
- Washers meet the dimensional requirements of ANSI B18.22.1, Type A, plain.
- Expansion sleeve (wedges) are made from stainless steel.
- Nuts and bolts are finished with a proprietary coating. Only Hilti KB-TZ2 nuts can be used with KB-TZ2 bolts.
- Stainless steel 304 bolts are manufactured from AISI Type 304 stainless steel.
- Stainless steel 316 bolts are manufactured from AISI Type 316 stainless steel.

INSTALLATION PARAMETERS

Table 1 — Hilti KB-TZ2 setting information for installation in concrete and grout-filled concrete masonry units (CMU)[1]

Setting information		Symbol	Units	Nominal anchor diameter (in)															
				1/4	3/8			1/2				5/8			3/4			1	
Nominal bit diameter		d_o	in.	1/4	3/8			1/2				5/8			3/4			1	
Effective minimum embedment		h_{ef}	in.	1-1/2	1-1/2	2	2-1/2	1-1/2 [2]	2	2-1/2	3-1/4	2-3/4	3-1/4	4	3-1/4	3-3/4	4-3/4	4	5-3/4
			(mm)	(38)	(38)	(51)	(64)	(38)	(51)	(64)	(83)	(70)	(83)	(102)	(83)	(95)	(121)	(102)	(146)
Nominal minimum embedment		h_{nom}	in.	1-3/4	1-7/8	2-1/2	3	2 2)	2-1/2	3	3-3/4	3-1/4	3-3/4	4-1/2	4	4-1/2	5-1/2	4-5/8	6-3/8
			(mm)	(44)	(48)	(64)	(76)	(51)	(64)	(76)	(95)	(83)	(95)	(114)	(102)	(114)	(140)	(117)	(162)
Min. hole depth		h_o	in.	2	2	2-3/4	3-1/4	2-1/4 [2]	2-3/4	3-1/4	4-1/4	3-3/4	4-1/4	4-3/4	4-1/4	4-3/4	5-3/4	5	6-3/4
			(mm)	(51)	(51)	(70)	(83)	(57)	(70)	(83)	(108)	(95)	(108)	(121)	(108)	(121)	(146)	(127)	(171)
Fixture hole diameter		d_h	in.	5/16	7/16			9/16				11/16			13/16			1-1/8	
			(mm)	(7.9)	(11.1)			(14.3)				(17.5)			(20.6)			(28.6)	
Concrete	Installation torque Carbon steel	$T_{inst,conc}$	ft-lb	4	30			50				40			110			185	
			(Nm)	(5)	(41)			(68)				(54)			(149)			(251)	
	Installation torque Stainless steel	$T_{inst,conc}$	ft-lb	6	30			40				60			125			185	
			(Nm)	(8)	(41)			(54)				(81)			(169)			(251)	
Grout-filled CMU	Installation torque Carbon steel	$T_{inst,CMU}$	ft-lb	4	15			25				30			50			N/A	
			(Nm)	(5)	(20)			(34)				(41)			(68)			N/A	
	Installation torque Stainless steel	$T_{inst,CMU}$	ft-lb	6	15			25				35			50			N/A	
			(Nm)	(8)	(20)			(34)				(48)			(68)			N/A	

1 Shaded cells are not applicable for installations in grout-filled CMU.
2 Design information for h_{ef} = 1-1/2 is only applicable to carbon steel (CS) KB-TZ2 bolts.

Hilti KWIK Bolt TZ2 Fracture Load (lb)[1]

Nominal Anchor Diameter (in)	Carbon Steel	Stainless Steel
1/4	2920	2920
3/8	6490	6180
1/2	11240	11870
5/8	17535	18835
3/4	25335	$f_{uta} \geq 105$, $f_y \geq 84$ [2]
1	$f_{uta} \geq 88$, $f_y \geq 75$ [2]	$f_{uta} \geq 99.9$, $f_y \geq 65$ [2]

1 Bolt fracture loads are determined by testing in a universal tensile machine for quality control at the manufacturing facility. These loads are not intended for design use.
2 All 3/4-in. stainless steel, all 1-in. carbon steel and all 1-in. stainless steel material strengths specified by the tensile and yield strengths expressed in (ksi). Bolt fracture loads not applicable for these models.

Figure 1 — Hilti KWIK Bolt TZ 2 specifications

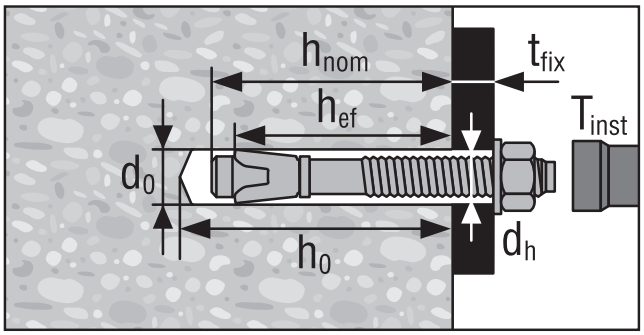

DESIGN INFORMATION IN CONCRETE PER ACI 318

ACI 318 Chapter 17 Design

The load values contained in this section are Hilti Simplified Design Tables. The load tables in this section were developed using the Strength Design parameters and variables of ICC-ES ESR-4266 and the equations within ACI 318 Chapter 17. For a detailed explanation of the Hilti Simplified Design Tables refer to section 3.1.8. Data tables from ESR-4266 are not contained in this section but can be found at www.icc-es.org or at www.hilti.com

Table 2 — Hilti Carbon Steel KB-TZ2 design strength based on concrete failure modes in uncracked concrete per ACI 318 Ch. 17, applicable for both hammer and core drilled installations [1,2,3,4]

Nominal anchor diameter in.	Effective embedment in. (mm)	Nominal embedment in. (mm)	Tension (lesser of concrete breakout / pullout) - ΦN_n				Shear (lesser of concrete breakout or pryout) - ΦV_n			
			f'_c = 2,500 psi (17.2 MPa) lb (kN)	f'_c = 3,000 psi (20.7 MPa) lb (kN)	f'_c = 4,000 psi (27.6 MPa) lb (kN)	f'_c = 6,000 psi (41.1 MPa) lb (kN)	f'_c = 2,500 psi (17.2 MPa) lb (kN)	f'_c = 3,000 psi (20.7 MPa) lb (kN)	f'_c = 4,000 psi (27.6 MPa) lb (kN)	f'_c = 6,000 psi (41.1 MPa) lb (kN)
1/4	1-1/2 (38)	1 3/4 (44)	945 (4.2)	980 (4.4)	1,040 (4.6)	1,125 (5.0)	1,545 (6.9)	1,690 (7.5)	1,950 (8.7)	2,390 (10.6)
3/8	1-1/2 (38)	1 7/8 (48)	1,435 (6.4)	1,570 (7.0)	1,815 (8.1)	2,220 (9.9)	1,545 (6.9)	1,690 (7.5)	1,950 (8.7)	2,390 (10.6)
	2 (51)	2 1/2 (64)	2,205 (9.8)	2,415 (10.7)	2,790 (12.4)	3,420 (15.2)	2,375 (10.6)	2,605 (11.6)	3,005 (13.4)	3,680 (16.4)
	2-1/2 (64)	3 (76)	2,715 (12.1)	2,895 (12.9)	3,205 (14.3)	3,690 (16.4)	6,640 (29.5)	7,275 (32.4)	8,400 (37.4)	10,290 (45.8)
1/2	1-1/2 (38)	2 (51)	1,610 (7.2)	1,765 (7.9)	2,040 (9.1)	2,495 (11.1)	1,735 (7.7)	1,900 (8.5)	2,195 (9.8)	2,690 (12.0)
	2 (51)	2 1/2 (64)	2,480 (11.0)	2,720 (12.1)	3,140 (14.0)	3,845 (17.1)	2,675 (11.9)	2,930 (13.0)	3,380 (15.0)	4,140 (18.4)
	2-1/2 (64)	3 (76)	3,085 (13.7)	3,375 (15.0)	3,900 (17.3)	4,775 (21.2)	6,640 (29.5)	7,275 (32.4)	8,400 (37.4)	10,290 (45.8)
	3-1/4 (83)	3 3/4 (95)	4,570 (20.3)	5,005 (22.3)	5,780 (25.7)	7,080 (31.5)	9,845 (43.8)	10,785 (48.0)	12,450 (55.4)	15,250 (67.8)
5/8	2-3/4 (70)	3 1/4 (83)	3,495 (15.5)	3,830 (17.0)	4,425 (19.7)	5,420 (24.1)	7,660 (34.1)	8,395 (37.3)	9,690 (43.1)	11,870 (52.8)
	3-1/4 (83)	3 3/4 (95)	4,570 (20.3)	5,005 (22.3)	5,780 (25.7)	7,080 (31.5)	9,845 (43.8)	10,785 (48.0)	12,450 (55.4)	15,250 (67.8)
	4 (102)	4 1/2 (114)	5,845 (26.0)	6,405 (28.5)	7,395 (32.9)	9,060 (40.3)	13,440 (59.8)	14,725 (65.5)	17,000 (75.6)	20,820 (92.6)
3/4	3-1/4 (83)	4 (102)	5,140 (22.9)	5,630 (25.0)	6,505 (28.9)	7,965 (35.4)	11,075 (49.3)	12,130 (54.0)	14,005 (62.3)	17,155 (76.3)
	3-3/4[5] (95)	4 1/2 (114)	6,370 (28.3)	6,980 (31.0)	8,060 (35.9)	9,870 (43.9)	13,725 (61.1)	15,035 (66.9)	17,360 (77.2)	21,265 (94.6)
	4-3/4 (121)	5 1/2 (140)	8,075 (35.9)	8,845 (39.3)	10,215 (45.4)	12,510 (55.6)	17,390 (77.4)	19,050 (84.7)	22,000 (97.9)	26,945 (119.9)
1	4 (102)	4 5/8 (117)	7,020 (31.2)	7,690 (34.2)	8,880 (39.5)	10,875 (48.4)	15,120 (67.3)	16,565 (73.7)	19,125 (85.1)	23,425 (104.2)
	5-3/4 (146)	6 3/8 (162)	10,755 (47.8)	11,780 (52.4)	13,605 (60.5)	16,660 (74.1)	23,165 (103.0)	25,375 (112.9)	29,300 (130.3)	35,885 (159.6)

1 See Section 3.1.8 to convert design strength value to ASD value.
2 Linear interpolation between embedment depths and concrete compressive strengths is not permitted.
3 Apply spacing, edge distance, and concrete thickness factors in tables 6 to 15 as necessary. Compare to the steel values in table 4. The lesser of the values is to be used for the design.
4 Tabular values are for normal weight concrete only. For lightweight concrete multiply design strength by λ_a as follows: For sand-lightweight, λ_a = 0.68; for all-lightweight, λ_a = 0.60.
5 For core drilled installations of 3/4" anchors installed at 3-3/4" effective embedment, apply a reduction factor of 0.89 to the design tension strength.

Table 3 — Hilti Carbon Steel KB-TZ2 design strength based on concrete failure modes in cracked concrete per ACI 318 Ch. 17, applicable for both hammer and core drilled installations [1,2,3,4,5]

Nominal anchor diameter in.	Effective embedment in. (mm)	Nominal embedment in. (mm)	Tension (lesser of concrete breakout / pullout) - ΦN_n				Shear (lesser of concrete breakout or pryout) - ΦV_n			
			f'_c = 2,500 psi (17.2 MPa) lb (kN)	f'_c = 3,000 psi (20.7 MPa) lb (kN)	f'_c = 4,000 psi (27.6 MPa) lb (kN)	f'_c = 6,000 psi (41.1 MPa) lb (kN)	f'_c = 2,500 psi (17.2 MPa) lb (kN)	f'_c = 3,000 psi (20.7 MPa) lb (kN)	f'_c = 4,000 psi (27.6 MPa) lb (kN)	f'_c = 6,000 psi (41.1 MPa) lb (kN)
1/4	1-1/2 (38)	1 3/4 (44)	280 (1.2)	300 (1.3)	340 (1.5)	395 (1.8)	1,095 (4.9)	1,195 (5.3)	1,385 (6.2)	1,695 (7.5)
3/8	1-1/2 (38)	1 7/8 (48)	1,255 (5.6)	1,375 (6.1)	1,585 (7.1)	1,940 (8.6)	1,350 (6.0)	1,480 (6.6)	1,710 (7.6)	2,090 (9.3)
	2 (51)	2 1/2 (64)	1,930 (8.6)	2,115 (9.4)	2,440 (10.9)	2,990 (13.3)	2,080 (9.3)	2,275 (10.1)	2,630 (11.7)	3,220 (14.3)
	2-1/2 (64)	3 (76)	2,185 (9.7)	2,390 (10.6)	2,765 (12.3)	3,385 (15.1)	4,705 (20.9)	5,155 (22.9)	5,950 (26.5)	7,285 (32.4)
1/2	1-1/2 (38)	2 (51)	1,435 (6.4)	1,570 (7.0)	1,815 (8.1)	2,220 (9.9)	1,545 (6.9)	1,690 (7.5)	1,950 (8.7)	2,390 (10.6)
	2 (51)	2 1/2 (64)	1,930 (8.6)	2,115 (9.4)	2,440 (10.9)	2,990 (13.3)	2,080 (9.3)	2,275 (10.1)	2,630 (11.7)	3,220 (14.3)
	2-1/2 (64)	3 (76)	2,700 (12.0)	2,955 (13.1)	3,415 (15.2)	4,180 (18.6)	5,810 (25.8)	6,365 (28.3)	7,350 (32.7)	9,000 (40.0)
	3-1/4 (83)	3 3/4 (95)	3,235 (14.4)	3,545 (15.8)	4,095 (18.2)	5,015 (22.3)	6,970 (31.0)	7,640 (34.0)	8,820 (39.2)	10,800 (48.0)
5/8	2-3/4 (70)	3 1/4 (83)	3,110 (13.8)	3,410 (15.2)	3,935 (17.5)	4,820 (21.4)	6,705 (29.8)	7,345 (32.7)	8,480 (37.7)	10,385 (46.2)
	3-1/4 (83)	3 3/4 (95)	4,000 (17.8)	4,380 (19.5)	5,060 (22.5)	6,195 (27.6)	8,615 (38.3)	9,435 (42.0)	10,895 (48.5)	13,345 (59.4)
	4 (102)	4 1/2 (114)	4,420 (19.7)	4,840 (21.5)	5,590 (24.9)	6,845 (30.4)	9,520 (42.3)	10,430 (46.4)	12,040 (53.6)	14,750 (65.6)
3/4	3-1/4 (83)	4 (102)	4,000 (17.8)	4,380 (19.5)	5,060 (22.5)	6,195 (27.6)	8,615 (38.3)	9,435 (42.0)	10,895 (48.5)	13,345 (59.4)
	3-3/4 (95)	4 1/2 (114)	4,955 (22.0)	5,430 (24.2)	6,270 (27.9)	7,680 (34.2)	10,675 (47.5)	11,695 (52.0)	13,505 (60.1)	16,540 (73.6)
	4-3/4 (121)	5 1/2 (140)	5,745 (25.6)	6,055 (26.9)	6,580 (29.3)	7,405 (32.9)	15,220 (67.7)	16,670 (74.2)	19,250 (85.6)	23,575 (104.9)
1	4 (102)	4 5/8 (117)	5,460 (24.3)	5,980 (26.6)	6,905 (30.7)	8,460 (37.6)	11,760 (52.3)	12,880 (57.3)	14,875 (66.2)	18,220 (81.0)
	5-3/4 (146)	6 3/8 (162)	7,675 (34.1)	8,410 (37.4)	9,710 (43.2)	11,890 (52.9)	20,270 (90.2)	22,205 (98.8)	25,640 (114.1)	31,400 (139.7)

1 See Section 3.1.8 to convert design strength value to ASD value.
2 Linear interpolation between embedment depths and concrete compressive strengths is not permitted.
3 Apply spacing, edge distance, and concrete thickness factors in tables 6 to 17 as necessary. Compare to the steel values in table 4. The lesser of the values is to be used for the design.
4 Tabular values are for normal weight concrete only. For lightweight concrete multiply design strength by λ_a as follows: For sand-lightweight, λ_a = 0.68; for all-lightweight, λ_a = 0.60.
5 Tabular values are for static loads only. Seismic design is not permitted for uncracked concrete. For seismic tension loads, multiply cracked concrete tabular values in tension only by $\alpha_{N,seis}$ = 0.75, except for 3/4 x 4-3/4 h_{ef} where $\alpha_{N,seis}$ = 0.73. No reduction needed for seismic shear. See Section 3.1.8 for additional information on seismic applications.

Table 4 — Hilti Carbon Steel KB-TZ2 design strength based on steel failure per ACI 318 Ch. 17 [1,2]

Nominal anchor diameter in.	Effective embedment depth in. (mm)			Tensile [3] ΦN_{sa} lb (kN)	Shear [4] ΦV_{sa} lb (kN)	Seismic Shear [5] ΦV_{sa} lb (kN)
1/4	1-1/2 (38)			2,190 (9.7)	875 (3.9)	875 (3.9)
3/8	1-1/2 (38)			4,870 (21.7)	2,095 (9.3)	2,095 (9.3)
3/8	2 (51)		2-1/2 (64)	4,870 (21.7)	2,200 (9.8)	2,200 (9.8)
1/2	1-1/2 (38)		2 (51)	8,430 (37.5)	3,600 (16.0)	3,600 (16.0)
1/2	2-1/2 (64)		3-1/4 (83)	8,430 (37.5)	4,470 (19.9)	4,470 (19.9)
5/8	2-3/4 (70)	3-1/4 (83)	4 (102)	13,150 (58.5)	6,665 (29.6)	6,665 (29.6)
3/4	3-1/4 (83)	3-3/4 (95)	4-3/4 (121)	19,000 (84.5)	8,975 (39.9)	8,975 (39.9)
1 (25.4)	4 (102)			31,025 (138.0)	12,215 (54.3)	8,975 (39.9)
1 (25.4)	5-3/4 (146)			31,025 (138.0)	14,875 (66.2)	8,975 (39.9)

1 See Section 3.1.8 to convert design strength value to ASD value.
2 Hilti KB-TZ2 carbon steel anchors are to be considered ductile steel elements.
3 Tensile $\phi N_{sa} = \phi A_{se,N} f_{uta}$ as noted in ACI 318 Ch. 17.
4 Shear values determined by static shear tests with $\phi V_{sa} < \phi\ 0.60\ A_{se,V} f_{uta}$ as noted in ACI 318 Ch. 17.
5 Seismic shear values determined by seismic shear tests with $\phi V_{sa} \leq \phi\ 0.60\ A_{se,V} f_{uta}$ as noted in ACI 318 Ch. 17. See Section 3.1.8 for additional information on seismic applications.

Figure 2

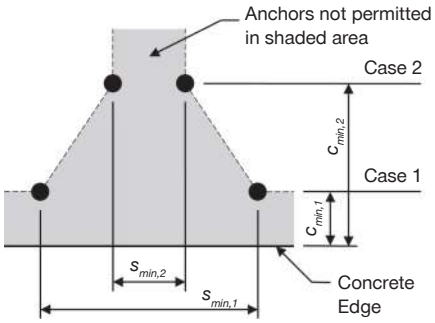

For a specific edge distance, the permitted spacing is calculated as follows:

$$s \geq s_{min,2} + \frac{(s_{min,1} - s_{min,2})}{(c_{min,1} - c_{min,2})}(c - c_{min,2})$$

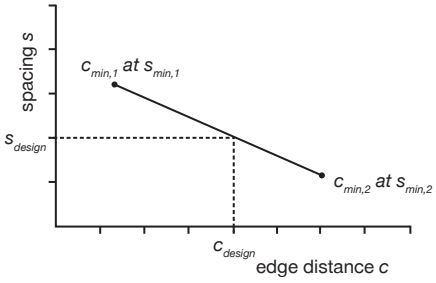

Table 5 — Hilti KB-TZ2 carbon steel installation parameters [1]

Setting information	Symbol	Units	Nominal Anchor diameter (in.)															
			1/4	3/8			1/2				5/8			3/4			1	
Effective embedment	h_{ef}	in.	1-1/2	1-1/2	2	2-1/2	1-1/2	2	2-1/2	3 1/4	2-3/4	3-1/4	4	3-1/4	3-3/4	4-3/4	4	5-3/4
		(mm)	(38)	(38)	(51)	(64)	(38)	(51)	(64)	(83)	(70)	(83)	(102)	(83)	(95)	(121)	(102)	(146)
Min. member thickness	h_{min}	in.	3-1/4	3-1/4	4	5	3-1/2	4	5	5-1/2	5	5-1/2	6	5-1/2	6	8	8	10
		(mm)	(83)	(83)	(102)	(127)	(89)	(102)	(127)	(140)	(127)	(140)	(152)	(140)	(152)	(203)	(203)	(254)
Case 1	$c_{min,1}$	in.	1-1/2	5	2-1/2	2-1/2	8	2-3/4	2-3/4	2-1/4	4-1/2	3-1/2	2-3/4	5	4	3-1/2	8	3
		(mm)	(38)	(127)	(64)	(64)	(203)	(70)	(70)	(57)	(114)	(89)	(70)	(127)	(102)	(89)	(203)	(76)
	for $s_{min,1} \geq$	in.	1-1/2	8	6	5	12	5-1/2	9-3/4	5-1/4	6-1/2	5-1/2	7-1/4	10	5-3/4	5-1/2	8	6-3/4
		(mm)	(38)	(203)	(152)	(127)	(305)	(140)	(248)	(133)	(165)	(140)	(184)	(254)	(146)	(140)	(203)	(171)
Case 2	$c_{min,2}$	in.	1-1/2	8	3-1/2	4	8	10	8	4-3/4	5-1/2	7	4-1/4	6	7-1/4	4-3/4	8	3-3/4
		(mm)	(38)	(203)	(89)	(102)	(203)	(254)	(203)	(121)	(140)	(178)	(108)	(152)	(184)	(121)	(203)	(95)
	for $s_{min,2} \geq$	in.	1-1/2	5	2-1/4	2	12	3-1/2	3	2	4-1/2	2-3/4	2-1/4	4-1/2	3-3/4	3-3/4	8	4-3/4
			(38)	(127)	(57)	(51)	(305)	(89)	(76)	(51)	(114)	(70)	(57)	(114)	(95)	(95)	(203)	(121)

1 Linear interpolation is permitted to establish an edge distance and spacing combination between Case 1 and Case 2. Linear interpolation for a specific edge distance c, where $c_{min,1} < c < c_{min,2}$, will determine the permissible spacings.

Table 6 — Load adjustment factors for Carbon Steel 1/4-in. diameter KB-TZ2 in uncracked concrete [1,2]

1/4-in. KB-TZ2 uncracked concrete			Spacing factor in tension f_{AN}	Edge distance factor in tension f_{RN}	Spacing factor in shear [3] f_{AV}	⊥ Toward edge f_{RV}	‖ To edge f_{RV}	Concrete thickness factor in shear [4] f_{HV}
Effective Embedment h_{ef}		in.	1-1/2	1-1/2	1-1/2	1-1/2	1-1/2	1-1/2
		(mm)	(38)	(38)	(38)	(38)	(38)	(38)
Nominal Embedment h_{nom}		in.	1-3/4	1-3/4	1-3/4	1-3/4	1-3/4	1-3/4
		(mm)	(44)	(44)	(44)	(44)	(44)	(44)
Spacing (s) / Edge Distance (c_a) / Concrete Thickness (h) - in. (mm)	1-1/2	(38)	0.67	0.42	0.56	0.23	0.42	n/a
	2	(51)	0.72	0.51	0.58	0.35	0.51	n/a
	2-1/2	(64)	0.78	0.63	0.60	0.49	0.63	n/a
	3	(76)	0.83	0.75	0.63	0.65	0.75	n/a
	3-1/4	(83)	0.86	0.81	0.64	0.73	0.81	0.74
	3-1/2	(89)	0.89	0.88	0.65	0.82	0.88	0.76
	4	(102)	0.94	1.00	0.67	1.00	1.00	0.82
	5	(127)	1.00		0.71			0.91
	6	(152)			0.75			1.00
	7	(178)			0.79			
	8	(203)			0.83			
	9	(229)			0.88			
	> 12	(305)			1.00			

3.3.5

Table 7 — Load adjustment factors for Carbon Steel 1/4-in. diameter KB-TZ2 in cracked concrete [1,2]

1/4-in. KB-TZ2 cracked concrete			Spacing factor in tension f_{AN}	Edge distance factor in tension f_{RN}	Spacing factor in shear [3] f_{AV}	⊥ Toward edge f_{RV}	‖ To edge f_{RV}	Concrete thickness factor in shear [4] f_{HV}
Effective Embedment h_e		in.	1-1/2	1-1/2	1-1/2	1-1/2	1-1/2	1-1/2
		(mm)	(38)	(38)	(38)	(38)	(38)	(38)
Nominal Embedment h_{nom}		in.	1-3/4	1-3/4	1-3/4	1-3/4	1-3/4	1-3/4
		(mm)	(44)	(44)	(44)	(44)	(44)	(44)
Spacing (s) / Edge Distance (c_a) / Concrete Thickness (h) - in. (mm)	1-1/2	(38)	0.67	0.75	0.57	0.29	0.59	n/a
	2	(51)	0.72	0.91	0.60	0.45	0.91	n/a
	2-1/2	(64)	0.78	1.00	0.62	0.63	1.00	n/a
	3	(76)	0.83		0.65	0.83		n/a
	3-1/4	(83)	0.86		0.66	0.94		0.80
	3-1/2	(89)	0.89		0.67	1.00		0.83
	4	(102)	0.94		0.70			0.89
	5	(127)	1.00		0.75			0.99
	6	(152)			0.80			1.00
	7	(178)			0.84			
	8	(203)			0.89			
	9	(229)			0.94			
	> 12	(305)			1.00			

1 Linear interpolation not permitted
2 When combining multiple load adjustment factors (e.g. for a 4 anchor pattern in a corner with thin concrete member) the design can become very conservative. To optimize the design, use Hilti PROFIS Engineering Design software or perform anchor calculation using design equations from ACI 318 Ch. 17 or CSA A23.3 Annex D.
3 Spacing factor reduction in shear, f_{AV}, is applicable when edge distance $c < 3h_{ef}$. If $c \geq 3h_{ef}$ then $f_{AV} = f_{AN}$.
4 Concrete thickness reduction factor in shear, f_{HV}, is applicable when edge distance $c < 3h_{ef}$. If $c \geq 3h_{ef}$ then $f_{HV} = 1.0$.

Table 8 — Load adjustment factors for Carbon Steel 3/8-in. diameter KB-TZ2 in uncracked concrete [1,2]

3/8-in. KB-TZ2 uncracked concrete			Spacing factor in tension f_{AN}			Edge distance factor in tension f_{RN}			Spacing factor in shear [3] f_{AV}			Edge distance in shear ⊥ Toward edge f_{RV}			Edge distance in shear ∥ To edge f_{RV}			Concrete thickness factor in shear [4] f_{HV}		
Effective Embedment h_{ef}		in.	1-1/2	2	2-1/2	1-1/2	2	2-1/2	1-1/2	2	2-1/2	1-1/2	2	2-1/2	1-1/2	2	2-1/2	1-1/2	2	2-1/2
		(mm)	(38)	(51)	(64)	(38)	(51)	(64)	(38)	(51)	(64)	(38)	(51)	(64)	(38)	(51)	(64)	(38)	(51)	(64)
Nominal Embedment h_{nom}		in.	1-7/8	2-1/2	3	1-7/8	2-1/2	3	1-7/8	2-1/2	3	1-7/8	2-1/2	3	1-7/8	2-1/2	3	1-7/8	2-1/2	3
		(mm)	(48)	(64)	(76)	(48)	(64)	(76)	(48)	(64)	(76)	(48)	(64)	(76)	(48)	(64)	(76)	(48)	(64)	(76)
Spacing (s) / Edge Distance (c_a) / Concrete Thickness (h) - in. (mm)	2	(51)	n/a	n/a	0.63	n/a	n/a	n/a	n/a	n/a	0.54	n/a	n/a	n/a	n/a	n/a	n/a	n/a	n/a	n/a
	2-1/4	(57)	n/a	0.69	0.65	n/a	n/a	n/a	n/a	0.59	0.55	n/a	n/a	n/a	n/a	n/a	n/a	n/a	n/a	n/a
	2-1/2	(64)	n/a	0.71	0.67	n/a	0.60	0.51	n/a	0.60	0.55	n/a	0.43	0.18	n/a	0.60	0.37	n/a	n/a	n/a
	3	(76)	n/a	0.75	0.70	n/a	0.69	0.58	n/a	0.61	0.56	n/a	0.57	0.24	n/a	0.69	0.48	n/a	n/a	n/a
	3-1/4	(83)	n/a	0.77	0.72	n/a	0.74	0.61	n/a	0.62	0.57	n/a	0.64	0.27	n/a	0.74	0.54	0.66	n/a	n/a
	3-1/2	(89)	n/a	0.79	0.73	n/a	0.80	0.65	n/a	0.63	0.58	n/a	0.72	0.30	n/a	0.80	0.61	0.68	n/a	n/a
	4	(102)	n/a	0.83	0.77	n/a	0.91	0.73	n/a	0.65	0.59	n/a	0.87	0.37	n/a	0.91	0.73	0.73	0.78	n/a
	5	(127)	1.00	0.92	0.83	1.00	1.00	0.91	0.67	0.69	0.61	1.00	1.00	0.52	1.00	1.00	0.91	0.82	0.87	0.66
	6	(152)	1.00	1.00	0.90	1.00		1.00	0.70	0.73	0.63	1.00		0.68	1.00		1.00	0.89	0.96	0.72
	8	(203)	1.00		1.00	1.00			0.77	0.80	0.67	1.00		1.00	1.00			1.00	1.00	0.83
	12	(305)							0.90	0.96	0.76									1.00
	18	(457)							1.00	1.00	0.89									
	> 24	(610)									1.00									

Table 9 — Load adjustment factors for Carbon Steel 3/8-in. diameter KB-TZ2 in cracked concrete [1,2]

3/8-in. KB-TZ2 cracked concrete			Spacing factor in tension f_{AN}			Edge distance factor in tension f_{RN}			Spacing factor in shear [3] f_{AV}			Edge distance in shear ⊥ Toward edge f_{RV}			Edge distance in shear ∥ To edge f_{RV}			Concrete thickness factor in shear [4] f_{HV}		
Effective Embedment h_{ef}		in.	1-1/2	2	2-1/2	1-1/2	2	2-1/2	1-1/2	2	2-1/2	1-1/2	2	2-1/2	1-1/2	2	2-1/2	1-1/2	2	2-1/2
		(mm)	(38)	(51)	(64)	(38)	(51)	(64)	(38)	(51)	(64)	(38)	(51)	(64)	(38)	(51)	(64)	(38)	(51)	(64)
Nominal Embedment h_{nom}		in.	1-7/8	2-1/2	3	1-7/8	2-1/2	3	1-7/8	2-1/2	3	1-7/8	2-1/2	3	1-7/8	2-1/2	3	1-7/8	2-1/2	3
		(mm)	(48)	(64)	(76)	(48)	(64)	(76)	(48)	(64)	(76)	(48)	(64)	(76)	(48)	(64)	(76)	(48)	(64)	(76)
Spacing (s) / Edge Distance (c_a) / Concrete Thickness (h) - in. (mm)	2	(51)	n/a	n/a	0.63	n/a	n/a	n/a	n/a	n/a	0.54	n/a	n/a	n/a	n/a	n/a	n/a	n/a	n/a	n/a
	2-1/4	(57)	n/a	0.69	0.65	n/a	n/a	n/a	n/a	0.58	0.55	n/a	n/a	n/a	n/a	n/a	n/a	n/a	n/a	n/a
	2-1/2	(64)	n/a	0.71	0.67	n/a	0.87	0.75	n/a	0.59	0.55	n/a	0.40	0.18	n/a	0.80	0.37	n/a	n/a	n/a
	3	(76)	n/a	0.75	0.70	n/a	1.00	0.85	n/a	0.61	0.56	n/a	0.52	0.24	n/a	1.00	0.48	n/a	n/a	n/a
	3-1/4	(83)	n/a	0.77	0.72	n/a	1.00	0.90	n/a	0.62	0.57	n/a	0.59	0.27	n/a	1.00	0.55	0.78	n/a	n/a
	3-1/2	(89)	n/a	0.79	0.73	n/a	1.00	0.95	n/a	0.63	0.58	n/a	0.66	0.31	n/a	1.00	0.61	0.81	n/a	n/a
	4	(102)	n/a	0.83	0.77	n/a		1.00	n/a	0.64	0.59	n/a	0.81	0.37	n/a		0.75	0.86	0.76	n/a
	5	(127)	1.00	0.92	0.83	1.00			0.73	0.68	0.61	1.00	1.00	0.52	1.00		1.00	0.96	0.85	0.66
	6	(152)	1.00	1.00	0.90	1.00			0.78	0.72	0.63	1.00		0.69	1.00			1.00	0.93	0.72
	8	(203)	1.00		1.00	1.00			0.87	0.79	0.67	1.00		1.00	1.00				1.00	0.83
	12	(305)							1.00	0.93	0.76									1.00
	18	(457)								1.00	0.89									
	> 24	(610)									1.00									

1 Linear interpolation not permitted
2 When combining multiple load adjustment factors (e.g. for a 4 anchor pattern in a corner with thin concrete member) the design can become very conservative. To optimize the design, use Hilti PROFIS Engineering Design software or perform anchor calculation using design equations from ACI 318 Ch. 17 or CSA A23.3 Annex D.
3 Spacing factor reduction in shear, f_{AV}, is applicable when edge distance $c < 3h_{ef}$. If $c \geq 3h_{ef}$ then $f_{AV} = f_{AN}$.
4 Concrete thickness reduction factor in shear, f_{HV}, is applicable when edge distance $c < 3h_{ef}$. If $c \geq 3h_{ef}$ then $f_{HV} = 1.0$.

If a reduction factor value is in a shaded cell, this indicates that this specific edge distance may not be permitted with a certain spacing (or vice versa). Check with Figure 2 and Table 5 to calculate permissible edge distance, spacing and concrete thickness combinations.

Table 10 — Load adjustment factors for Carbon Steel 1/2-in. diameter KB-TZ2 in uncracked concrete [1,2]

1/2-in. KB-TZ2 uncracked concrete		Spacing factor in tension f_{AN}				Edge distance factor in tension f_{RN}				Spacing factor in shear [3] f_{AV}				Edge distance in shear ⊥ Toward edge f_{RV}				Edge distance in shear ‖ To edge f_{RV}				Concrete thickness factor in shear [4] f_{HV}			
Effective Embedment h_{ef}	in.	1-1/2	2	2-1/2	3-1/4	1-1/2	2	2-1/2	3-1/4	1-1/2	2	2-1/2	3-1/4	1-1/2	2	2-1/2	3-1/4	1-1/2	2	2-1/2	3-1/4	1-1/2	2	2-1/2	3-1/4
	(mm)	(38)	(51)	(64)	(83)	(38)	(51)	(64)	(83)	(38)	(51)	(64)	(83)	(38)	(51)	(64)	(83)	(38)	(51)	(64)	(83)	(38)	(51)	(64)	(83)
Nominal Embedment h_{nom}	in.	2	2-1/2	3	3-3/4	2	2-1/2	3	3-3/4	2	2-1/2	3	3-3/4	2	2-1/2	3	3-3/4	2	2-1/2	3	3-3/4	2	2-1/2	3	3-3/4
	(mm)	(51)	(64)	(76)	(95)	(51)	(64)	(76)	(95)	(51)	(64)	(76)	(95)	(51)	(64)	(76)	(95)	(51)	(64)	(76)	(95)	(51)	(64)	(76)	(95)
Spacing (s) / Edge Distance (c_a) / Concrete Thickness (h) - in. (mm)																									
2	(51)	n/a	n/a	n/a	0.60	n/a	n/a	n/a	n/a	n/a	n/a	n/a	0.53	n/a	n/a	n/a	n/a	n/a	n/a	n/a	n/a	n/a	n/a	n/a	n/a
2-1/4	(57)	n/a	n/a	n/a	0.62	n/a	n/a	n/a	0.30	n/a	n/a	n/a	0.54	n/a	n/a	n/a	0.11	n/a	n/a	n/a	0.21	n/a	n/a	n/a	n/a
2-3/4	(70)	n/a	n/a	n/a	0.64	n/a	0.51	0.44	0.33	n/a	n/a	n/a	0.55	n/a	0.35	0.23	0.14	n/a	0.51	0.44	0.29	n/a	n/a	n/a	n/a
3	(76)	n/a	n/a	0.70	0.65	n/a	0.55	0.47	0.35	n/a	n/a	0.57	0.55	n/a	0.40	0.26	0.16	n/a	0.55	0.47	0.33	n/a	n/a	n/a	n/a
3-1/4	(83)	n/a	n/a	0.72	0.67	n/a	0.59	0.50	0.37	n/a	n/a	0.57	0.55	n/a	0.45	0.30	0.19	n/a	0.59	0.50	0.37	0.52	n/a	n/a	n/a
3-1/2	(89)	n/a	0.79	0.73	0.68	n/a	0.64	0.53	0.38	n/a	0.61	0.58	0.56	n/a	0.51	0.33	0.21	n/a	0.64	0.53	0.38	0.54	n/a	n/a	n/a
4	(102)	n/a	0.83	0.77	0.71	n/a	0.73	0.59	0.42	n/a	0.62	0.59	0.57	n/a	0.62	0.40	0.25	n/a	0.73	0.59	0.42	0.58	0.70	n/a	n/a
4-3/4	(121)	n/a	0.90	0.82	0.74	n/a	0.86	0.70	0.48	n/a	0.64	0.61	0.58	n/a	0.80	0.52	0.33	n/a	0.86	0.70	0.48	0.63	0.76	n/a	n/a
5	(127)	n/a	0.92	0.83	0.76	n/a	0.91	0.74	0.50	n/a	0.65	0.61	0.58	n/a	0.87	0.56	0.35	n/a	0.91	0.74	0.50	0.65	0.78	0.67	n/a
5-1/4	(133)	n/a	0.94	0.85	0.77	n/a	0.95	0.78	0.53	n/a	0.66	0.62	0.59	n/a	0.93	0.61	0.38	n/a	0.95	0.78	0.53	0.66	0.80	0.69	n/a
5-1/2	(140)	n/a	0.96	0.87	0.78	n/a	1.00	0.81	0.55	n/a	0.67	0.63	0.59	n/a	1.00	0.65	0.41	n/a	1.00	0.81	0.55	0.68	0.82	0.71	0.61
6	(152)	n/a	1.00	0.90	0.81	n/a	1.00	0.89	0.60	n/a	0.68	0.64	0.60	n/a	1.00	0.74	0.46	n/a	1.00	0.89	0.60	0.71	0.85	0.74	0.63
8	(203)	n/a		1.00	0.91	1.00	1.00	1.00	0.80	n/a	0.74	0.68	0.63	1.00	1.00	1.00	0.72	1.00	1.00	1.00	0.80	0.82	0.98	0.85	0.73
9-3/4	(248)	n/a		1.00	1.00		1.00		0.98	n/a	0.80	0.72	0.66		1.00		0.96		1.00		0.98	0.90	1.00	0.94	0.81
10	(254)	n/a					1.00		1.00	n/a	0.80	0.73	0.67		1.00		1.00		1.00		1.00	0.91		0.95	0.82
12	(305)	1.00								0.75	0.86	0.77	0.70									1.00		1.00	0.89
24	(610)									1.00	1.00	1.00	0.90												1.00
> 30	(762)												1.00												

3.3.5

Table 11 — Load adjustment factors for Carbon Steel 1/2-in. diameter KB-TZ2 in cracked concrete [1,2]

1/2-in. KB-TZ2 cracked concrete		Spacing factor in tension f_{AN}				Edge distance factor in tension f_{RN}				Spacing factor in shear [3] f_{AV}				Edge distance in shear ⊥ Toward edge f_{RV}				Edge distance in shear ‖ To edge f_{RV}				Concrete thickness factor in shear [4] f_{HV}			
Effective Embedment h_{ef}	in.	1-1/2	2	2-1/2	3-1/4	1-1/2	2	2-1/2	3-1/4	1-1/2	2	2-1/2	3-1/4	1-1/2	2	2-1/2	3-1/4	1-1/2	2	2-1/2	3-1/4	1-1/2	2	2-1/2	3-1/4
	(mm)	(38)	(51)	(64)	(83)	(38)	(51)	(64)	(83)	(38)	(51)	(64)	(83)	(38)	(51)	(64)	(83)	(38)	(51)	(64)	(83)	(38)	(51)	(64)	(83)
Nominal Embedment h_{nom}	in.	2	2-1/2	3	3-3/4	2	2-1/2	3	3-3/4	2	2-1/2	3	3-3/4	2	2-1/2	3	3-3/4	2	2-1/2	3	3-3/4	2	2-1/2	3	3-3/4
	(mm)	(51)	(64)	(76)	(95)	(51)	(64)	(76)	(95)	(51)	(64)	(76)	(95)	(51)	(64)	(76)	(95)	(51)	(64)	(76)	(95)	(51)	(64)	(76)	(95)
Spacing (s) / Edge Distance (c_a) / Concrete Thickness (h) - in. (mm)																									
2	(51)	n/a	n/a	n/a	0.60	n/a	n/a	n/a	n/a	n/a	n/a	n/a	0.54	n/a	n/a	n/a	n/a	n/a	n/a	n/a	n/a	n/a	n/a	n/a	n/a
2-1/4	(57)	n/a	n/a	n/a	0.62	n/a	n/a	n/a	0.61	n/a	n/a	n/a	0.54	n/a	n/a	n/a	0.12	n/a	n/a	n/a	0.24	n/a	n/a	n/a	n/a
2-3/4	(70)	n/a	n/a	n/a	0.64	n/a	0.93	0.80	0.68	n/a	n/a	n/a	0.55	n/a	0.50	0.19	0.16	n/a	0.93	0.38	0.33	n/a	n/a	n/a	n/a
3	(76)	n/a	n/a	0.70	0.65	n/a	1.00	0.85	0.71	n/a	n/a	0.56	0.55	n/a	0.57	0.21	0.19	n/a	1.00	0.43	0.38	n/a	n/a	n/a	n/a
3-1/4	(83)	n/a	n/a	0.72	0.67	n/a	1.00	0.90	0.75	n/a	n/a	0.56	0.56	n/a	0.64	0.24	0.21	n/a	1.00	0.48	0.42	0.76	n/a	n/a	n/a
3-1/2	(89)	n/a	0.79	0.73	0.68	n/a	1.00	0.95	0.79	n/a	0.63	0.57	0.56	n/a	0.72	0.27	0.24	n/a	1.00	0.54	0.47	0.79	n/a	n/a	n/a
4	(102)	n/a	0.83	0.77	0.71	n/a	1.00	1.00	0.86	n/a	0.65	0.58	0.57	n/a	0.88	0.33	0.29	n/a	1.00	0.66	0.58	0.85	0.78	n/a	n/a
4-3/4	(121)	n/a	0.90	0.82	0.74	n/a	1.00	1.00	0.98	n/a	0.68	0.59	0.59	n/a	1.00	0.43	0.37	n/a	1.00	0.85	0.75	0.92	0.85	n/a	n/a
5	(127)	n/a	0.92	0.83	0.76	n/a	1.00	1.00	1.00	n/a	0.69	0.60	0.59	n/a	1.00	0.46	0.40	n/a	1.00	0.92	0.81	0.95	0.87	0.63	n/a
5-1/4	(133)	n/a	0.94	0.85	0.77	n/a	1.00	1.00		n/a	0.70	0.60	0.60	n/a	1.00	0.49	0.43	n/a	1.00	0.99	0.87	0.97	0.90	0.65	n/a
5-1/2	(140)	n/a	0.96	0.87	0.78	n/a	1.00	1.00		n/a	0.71	0.61	0.60	n/a	1.00	0.53	0.47	n/a	1.00	1.00	0.93	0.99	0.92	0.66	0.63
6	(152)	n/a	1.00	0.90	0.81	n/a	1.00	1.00		n/a	0.73	0.62	0.61	n/a	1.00	0.60	0.53	n/a	1.00	1.00	1.00	1.00	0.96	0.69	0.66
8	(203)	n/a		1.00	0.91	1.00	1.00	1.00		n/a	0.81	0.66	0.65	1.00	1.00	0.93	0.82	1.00	1.00	1.00			1.00	0.80	0.76
9-3/4	(248)	n/a		1.00	1.00		1.00			n/a	0.87	0.69	0.68		1.00	1.00	1.00		1.00					0.88	0.84
10	(254)	n/a					1.00			n/a	0.88	0.70	0.68		1.00				1.00					0.89	0.85
12	(305)	1.00								1.00	0.96	0.74	0.72											0.98	0.94
24	(610)										1.00	0.98	0.94											1.00	1.00
> 30	(762)											1.00	1.00												

1 Linear interpolation not permitted
2 When combining multiple load adjustment factors (e.g. for a 4 anchor pattern in a corner with thin concrete member) the design can become very conservative. To optimize the design, use Hilti PROFIS Engineering Design software or perform anchor calculation using design equations from ACI 318 Ch. 17 or CSA A23.3 Annex D.
3 Spacing factor reduction in shear, f_{AV}, is applicable when edge distance $c < 3h_{ef}$. If $c \geq 3h_{ef}$ then $f_{AV} = f_{AN}$.
4 Concrete thickness reduction factor in shear, f_{HV}, is applicable when edge distance $c < 3h_{ef}$. If $c \geq 3h_{ef}$ then $f_{HV} = 1.0$.

If a reduction factor value is in a shaded cell, this indicates that this specific edge distance may not be permitted with a certain spacing (or vice versa). Check with Figure 2 and Table 5 to calculate permissible edge distance, spacing and concrete thickness combinations.

Table 12 — Load adjustment factors for Carbon Steel 5/8-in. diameter KB-TZ2 in uncracked concrete [1,2]

5/8-in. KB-TZ2 uncracked concrete		Spacing factor in tension f_{AN}			Edge distance factor in tension f_{RN}			Spacing factor in shear [3] f_{AV}			Edge distance in shear ⊥ Toward edge f_{RV}			Edge distance in shear ∥ To edge f_{RV}			Concrete thickness factor in shear [4] f_{HV}		
Effective Embedment h_{ef}	in.	2-3/4	3-1/4	4	2-3/4	3-1/4	4	2-3/4	3-1/4	4	2-3/4	3-1/4	4	2-3/4	3-1/4	4	2-3/4	3-1/4	4
	(mm)	(70)	(83)	(102)	(70)	(83)	(102)	(70)	(83)	(102)	(70)	(83)	(102)	(70)	(83)	(102)	(70)	(83)	(102)
Nominal Embedment h_{nom}	in.	3-1/4	3-3/4	4-1/2	3-1/4	3-3/4	4-1/2	3-1/4	3-3/4	4-1/2	3-1/4	3-3/4	4-1/2	3-1/4	3-3/4	4-1/2	3-1/4	3-3/4	4-1/2
	(mm)	(83)	(95)	(114)	(83)	(95)	(114)	(83)	(95)	(114)	(83)	(95)	(114)	(83)	(95)	(114)	(83)	(95)	(114)
Spacing (s) / Edge Distance (c_a) / Concrete Thickness (h) - in. (mm)																			
2-1/4	(57)	n/a	0.62	n/a	n/a	n/a	0.38	n/a	0.53	n/a	n/a	n/a	0.10	n/a	n/a	0.20	n/a	n/a	n/a
2-3/4	(70)	n/a	0.64	0.61	n/a	n/a	0.42	n/a	0.54	0.54	n/a	n/a	0.13	n/a	n/a	0.27	n/a	n/a	n/a
3	(76)	n/a	0.65	0.63	n/a	0.30	0.44	n/a	0.54	0.55	n/a	0.13	0.15	n/a	0.27	0.30	n/a	n/a	n/a
3-1/2	(89)	n/a	0.68	0.65	n/a	0.33	0.48	n/a	0.55	0.56	n/a	0.17	0.19	n/a	0.33	0.38	n/a	n/a	n/a
4	(102)	0.74	0.71	0.67	0.40	0.37	0.51	0.57	0.56	0.56	0.25	0.21	0.23	0.40	0.37	0.47	n/a	n/a	n/a
4-1/2	(114)	0.77	0.73	0.69	0.45	0.40	0.56	0.58	0.57	0.57	0.30	0.24	0.28	0.45	0.40	0.56	n/a	n/a	n/a
5	(127)	0.80	0.76	0.71	0.50	0.43	0.60	0.58	0.57	0.58	0.35	0.29	0.33	0.50	0.43	0.60	0.58	n/a	n/a
5-1/2	(140)	0.83	0.78	0.73	0.55	0.48	0.64	0.59	0.58	0.59	0.41	0.33	0.38	0.55	0.48	0.64	0.61	0.56	n/a
6	(152)	0.86	0.81	0.75	0.60	0.52	0.69	0.60	0.59	0.59	0.46	0.38	0.43	0.60	0.52	0.69	0.63	0.59	0.62
6-1/2	(165)	0.89	0.83	0.77	0.65	0.57	0.74	0.61	0.59	0.60	0.52	0.42	0.48	0.65	0.57	0.74	0.66	0.61	0.64
7	(178)	0.92	0.86	0.79	0.70	0.61	0.80	0.62	0.60	0.61	0.59	0.47	0.54	0.70	0.61	0.80	0.68	0.64	0.67
7-1/4	(184)	0.94	0.87	0.80	0.73	0.63	0.83	0.62	0.61	0.61	0.62	0.50	0.57	0.73	0.63	0.83	0.70	0.65	0.68
12	(305)	1.00	1.00	1.00	1.00	1.00	1.00	0.70	0.67	0.69	1.00	1.00	1.00	1.00	1.00	1.00	0.89	0.83	0.87
24	(610)							0.90	0.85	0.88							1.00	1.00	1.00
> 36	(914)							1.00	1.00	1.00									

Table 13 — Load adjustment factors for Carbon Steel 5/8-in. diameter KB-TZ2 in cracked concrete [1,2]

5/8-in. KB-TZ2 cracked concrete		Spacing factor in tension f_{AN}			Edge distance factor in tension f_{RN}			Spacing factor in shear [3] f_{AV}			Edge distance in shear ⊥ Toward edge f_{RV}			Edge distance in shear ∥ To edge f_{RV}			Concrete thickness factor in shear [4] f_{HV}		
Effective Embedment h_{ef}	in.	2-3/4	3-1/4	4	2-3/4	3-1/4	4	2-3/4	3-1/4	4	2-3/4	3-1/4	4	2-3/4	3-1/4	4	2-3/4	3-1/4	4
	(mm)	(70)	(83)	(102)	(70)	(83)	(102)	(70)	(83)	(102)	(70)	(83)	(102)	(70)	(83)	(102)	(70)	(83)	(102)
Nominal Embedment h_{nom}	in.	3-1/4	3-3/4	4-1/2	3-1/4	3-3/4	4-1/2	3-1/4	3-3/4	4-1/2	3-1/4	3-3/4	4-1/2	3-1/4	3-3/4	4-1/2	3-1/4	3-3/4	4-1/2
	(mm)	(83)	(95)	(114)	(83)	(95)	(114)	(83)	(95)	(114)	(83)	(95)	(114)	(83)	(95)	(114)	(83)	(95)	(114)
Spacing (s) / Edge Distance (c_a) / Concrete Thickness (h) - in. (mm)																			
2-1/4	(57)	n/a	0.62	n/a	n/a	n/a	0.56	n/a	0.54	n/a	n/a	n/a	0.10	n/a	n/a	0.20	n/a	n/a	n/a
2-3/4	(70)	n/a	0.64	0.61	n/a	n/a	0.61	n/a	0.55	0.54	n/a	n/a	0.13	n/a	n/a	0.27	n/a	n/a	n/a
3	(76)	n/a	0.65	0.63	n/a	0.71	0.64	n/a	0.55	0.55	n/a	0.16	0.15	n/a	0.32	0.31	n/a	n/a	n/a
3-1/2	(89)	n/a	0.68	0.65	n/a	0.79	0.69	n/a	0.56	0.56	n/a	0.20	0.19	n/a	0.41	0.39	n/a	n/a	n/a
4	(102)	0.74	0.71	0.67	0.98	0.86	0.75	0.58	0.57	0.56	0.31	0.25	0.24	0.62	0.50	0.47	n/a	n/a	n/a
4-1/2	(114)	0.77	0.73	0.69	1.00	0.94	0.81	0.59	0.57	0.57	0.37	0.30	0.28	0.74	0.60	0.56	n/a	n/a	n/a
5	(127)	0.80	0.76	0.71	1.00	1.00	0.87	0.60	0.58	0.58	0.43	0.35	0.33	0.87	0.70	0.66	0.62	n/a	n/a
5-1/2	(140)	0.83	0.78	0.73	1.00	1.00	0.93	0.61	0.59	0.59	0.50	0.40	0.38	1.00	0.81	0.76	0.65	0.60	n/a
6	(152)	0.86	0.81	0.75		1.00	1.00	0.61	0.60	0.60	0.57	0.46	0.43		0.92	0.87	0.68	0.63	0.62
6-1/2	(165)	0.89	0.83	0.77		1.00		0.62	0.61	0.60	0.64	0.52	0.49		1.00	0.98	0.71	0.66	0.64
7	(178)	0.92	0.86	0.79		1.00		0.63	0.62	0.61	0.72	0.58	0.55		1.00	1.00	0.73	0.68	0.67
7-1/4	(184)	0.94	0.87	0.80				0.64	0.62	0.62	0.76	0.61	0.58				0.74	0.69	0.68
12	(305)	1.00	1.00	1.00				0.73	0.70	0.69	1.00	1.00	1.00				0.96	0.89	0.87
24	(610)							0.96	0.90	0.88							1.00	1.00	1.00
> 36	(914)							1.00	1.00	1.00									

1 Linear interpolation not permitted
2 When combining multiple load adjustment factors (e.g. for a 4 anchor pattern in a corner with thin concrete member) the design can become very conservative. To optimize the design, use Hilti PROFIS Engineering Design software or perform anchor calculation using design equations from ACI 318 Ch. 17 or CSA A23.3 Annex D.
3 Spacing factor reduction in shear, f_{AV}, is applicable when edge distance $c < 3h_{ef}$. If $c \geq 3h_{ef}$ then $f_{AV} = f_{AN}$.
4 Concrete thickness reduction factor in shear, f_{HV}, is applicable when edge distance $c < 3h_{ef}$. If $c \geq 3h_{ef}$ then $f_{HV} = 1.0$.

If a reduction factor value is in a shaded cell, this indicates that this specific edge distance may not be permitted with a certain spacing (or vice versa). Check with Figure 2 and Table 5 to calculate permissible edge distance, spacing and concrete thickness combinations.

Table 14 — Load adjustment factors for Carbon Steel 3/4-in. diameter KB-TZ2 in uncracked concrete [1,2]

3/4-in. KB-TZ2 uncracked concrete		Spacing factor in tension f_{AN}			Edge distance factor in tension f_{RN}			Spacing factor in shear [3] f_{AV}			Edge distance in shear ⊥ Toward edge f_{RV}			Edge distance in shear ‖ To edge f_{RV}			Concrete thickness factor in shear [4] f_{HV}		
Effective Embedment h_{ef}	in.	3-1/4	3-3/4	4-3/4	3-1/4	3-3/4	4-3/4	3-1/4	3-3/4	4-3/4	3-1/4	3-3/4	4-3/4	3-1/4	3-3/4	4-3/4	3-1/4	3-3/4	4-3/4
	(mm)	(83)	(95)	(121)	(83)	(95)	(121)	(83)	(95)	(121)	(83)	(95)	(121)	(83)	(95)	(121)	(83)	(95)	(121)
Nominal Embedment h_{nom}	in.	4	4-1/2	5-1/2	4	4-1/2	5-1/2	4	4-1/2	5-1/2	4	4-1/2	5-1/2	4	4-1/2	5-1/2	4	4-1/2	5-1/2
	(mm)	(102)	(114)	(140)	(102)	(114)	(140)	(102)	(114)	(140)	(102)	(114)	(140)	(102)	(114)	(140)	(102)	(114)	(140)
Spacing (s) / Edge Distance (c_a) / Concrete Thickness (h) - in. (mm)																			
3-1/2	(89)	n/a	n/a	n/a	n/a	n/a	0.50	n/a	n/a	n/a	n/a	n/a	0.16	n/a	n/a	0.32	n/a	n/a	n/a
3-3/4	(95)	n/a	0.67	0.63	n/a	n/a	0.52	n/a	0.56	0.55	n/a	n/a	0.18	n/a	n/a	0.36	n/a	n/a	n/a
4	(102)	n/a	0.68	0.64	n/a	0.44	0.54	n/a	0.56	0.56	n/a	0.24	0.20	n/a	0.44	0.40	n/a	n/a	n/a
4-1/2	(114)	0.73	0.70	0.66	n/a	0.48	0.57	0.56	0.57	0.56	n/a	0.29	0.24	n/a	0.48	0.47	n/a	n/a	n/a
4-3/4	(121)	0.74	0.71	0.67	n/a	0.49	0.59	0.57	0.58	0.57	n/a	0.31	0.26	n/a	0.49	0.51	n/a	n/a	n/a
5	(127)	0.76	0.72	0.68	0.42	0.51	0.61	0.57	0.58	0.57	0.27	0.33	0.28	0.42	0.51	0.55	n/a	n/a	n/a
5-1/2	(140)	0.78	0.74	0.69	0.46	0.55	0.65	0.58	0.59	0.58	0.31	0.39	0.32	0.46	0.55	0.64	0.55	n/a	n/a
5-3/4	(146)	0.79	0.76	0.70	0.48	0.58	0.67	0.58	0.59	0.58	0.33	0.41	0.34	0.48	0.58	0.67	0.57	n/a	n/a
6	(152)	0.81	0.77	0.71	0.50	0.60	0.69	0.58	0.60	0.58	0.35	0.44	0.36	0.50	0.60	0.69	0.58	0.62	n/a
7	(178)	0.86	0.81	0.75	0.58	0.70	0.78	0.60	0.61	0.60	0.45	0.55	0.46	0.58	0.70	0.78	0.62	0.67	n/a
7-1/4	(184)	0.87	0.82	0.75	0.60	0.73	0.81	0.60	0.62	0.60	0.47	0.58	0.48	0.60	0.73	0.81	0.63	0.68	n/a
8	(203)	0.91	0.86	0.78	0.67	0.80	0.89	0.61	0.63	0.61	0.54	0.68	0.56	0.67	0.80	0.89	0.67	0.72	0.67
9	(229)	0.96	0.90	0.82	0.75	0.90	1.00	0.63	0.64	0.63	0.65	0.81	0.67	0.75	0.90	1.00	0.71	0.76	0.71
10	(254)	1.00	0.94	0.85	0.83	1.00		0.64	0.66	0.64	0.76	0.94	0.78	0.83	1.00		0.75	0.80	0.75
11	(279)		0.99	0.89	0.92			0.65	0.68	0.66	0.88	1.00	0.90	0.92			0.78	0.84	0.79
12	(305)		1.00	0.92	1.00			0.67	0.69	0.67	1.00		1.00	1.00			0.82	0.88	0.82
16	(406)			1.00				0.72	0.76	0.73							0.94	1.00	0.95
18	(457)							0.75	0.79	0.75							1.00		1.00
24	(610)							0.83	0.89	0.84									
> 36	(914)							1.00	1.00	1.00									

3.3.5

Table 15 — Load adjustment factors for Carbon Steel 3/4-in. diameter KB-TZ2 in cracked concrete [1,2]

3/4-in. KB-TZ2 cracked concrete		Spacing factor in tension f_{AN}			Edge distance factor in tension f_{RN}			Spacing factor in shear [3] f_{AV}			Edge distance in shear ⊥ Toward edge f_{RV}			Edge distance in shear ‖ To edge f_{RV}			Concrete thickness factor in shear [4] f_{HV}		
Effective Embedment h_{ef}	in.	3-1/4	3-3/4	4-3/4	3-1/4	3-3/4	4-3/4	3-1/4	3-3/4	4-3/4	3-1/4	3-3/4	4-3/4	3-1/4	3-3/4	4-3/4	3-1/4	3-3/4	4-3/4
	(mm)	(83)	(95)	(121)	(83)	(95)	(121)	(83)	(95)	(121)	(83)	(95)	(121)	(83)	(95)	(121)	(83)	(95)	(121)
Nominal Embedment h_{nom}	in.	4	4-1/2	5-1/2	4	4-1/2	5-1/2	4	4-1/2	5-1/2	4	4-1/2	5-1/2	4	4-1/2	5-1/2	4	4-1/2	5-1/2
	(mm)	(102)	(114)	(140)	(102)	(114)	(140)	(102)	(114)	(140)	(102)	(114)	(140)	(102)	(114)	(140)	(102)	(114)	(140)
Spacing (s) / Edge Distance (c_a) / Concrete Thickness (h) - in. (mm)																			
3-1/2	(89)	n/a	n/a	n/a	n/a	n/a	0.63	n/a	n/a	n/a	n/a	n/a	0.13	n/a	n/a	0.26	n/a	n/a	n/a
3-3/4	(95)	n/a	0.67	0.63	n/a	n/a	0.65	n/a	0.56	0.55	n/a	n/a	0.15	n/a	n/a	0.29	n/a	n/a	n/a
4	(102)	n/a	0.68	0.64	n/a	0.78	0.68	n/a	0.56	0.55	n/a	0.22	0.16	n/a	0.44	0.32	n/a	n/a	n/a
4-1/2	(114)	0.73	0.70	0.66	n/a	0.85	0.73	0.58	0.57	0.56	n/a	0.26	0.19	n/a	0.52	0.39	n/a	n/a	n/a
4-3/4	(121)	0.74	0.71	0.67	n/a	0.88	0.75	0.58	0.57	0.56	n/a	0.28	0.21	n/a	0.57	0.42	n/a	n/a	n/a
5	(127)	0.76	0.72	0.68	1.00	0.91	0.77	0.59	0.58	0.56	0.37	0.31	0.23	0.74	0.61	0.45	n/a	n/a	n/a
5-1/2	(140)	0.78	0.74	0.69	1.00	0.98	0.83	0.59	0.58	0.57	0.43	0.35	0.26	0.85	0.71	0.52	0.61	n/a	n/a
5-3/4	(146)	0.79	0.76	0.70	1.00	1.00	0.85	0.60	0.59	0.57	0.46	0.38	0.28	0.91	0.76	0.56	0.63	n/a	n/a
6	(152)	0.81	0.77	0.71	1.00	1.00	0.88	0.60	0.59	0.57	0.49	0.40	0.30	0.97	0.81	0.59	0.64	0.60	n/a
7	(178)	0.86	0.81	0.75		1.00	0.99	0.62	0.61	0.59	0.61	0.51	0.37	1.00	1.00	0.75	0.69	0.65	n/a
7-1/4	(184)	0.87	0.82	0.75			1.00	0.62	0.61	0.59	0.64	0.54	0.39	1.00	1.00	0.79	0.71	0.66	n/a
8	(203)	0.91	0.86	0.78				0.64	0.62	0.60	0.75	0.62	0.46			0.91	0.74	0.70	0.63
9	(229)	0.96	0.90	0.82				0.65	0.64	0.61	0.89	0.74	0.54			1.00	0.79	0.74	0.67
10	(254)	1.00	0.94	0.85				0.67	0.65	0.62	1.00	0.87	0.64				0.83	0.78	0.70
11	(279)		0.99	0.89				0.69	0.67	0.64		1.00	0.74				0.87	0.82	0.74
12	(305)		1.00	0.92				0.71	0.68	0.65			0.84				0.91	0.85	0.77
16	(406)			1.00				0.77	0.74	0.70			1.00				1.00	0.98	0.89
18	(457)							0.81	0.77	0.72								1.00	0.94
24	(610)							0.91	0.86	0.80									1.00
> 36	(914)							1.00	1.00	0.94									

1 Linear interpolation not permitted
2 When combining multiple load adjustment factors (e.g. for a 4 anchor pattern in a corner with thin concrete member) the design can become very conservative. To optimize the design, use Hilti PROFIS Engineering Design software or perform anchor calculation using design equations from ACI 318 Ch. 17 or CSA A23.3 Annex D.
3 Spacing factor reduction in shear, f_{AV}, is applicable when edge distance $c < 3h_{ef}$. If $c \geq 3h_{ef}$ then $f_{AV} = f_{AN}$.
4 Concrete thickness reduction factor in shear, f_{HV}, is applicable when edge distance $c < 3h_{ef}$. If $c \geq 3h_{ef}$ then $f_{HV} = 1.0$.

If a reduction factor value is in a shaded cell, this indicates that this specific edge distance may not be permitted with a certain spacing (or vice versa). Check with Figure 2 and Table 5 to calculate permissible edge distance, spacing and concrete thickness combinations.

Table 16 — Load adjustment factors for Carbon Steel 1-in. diameter KB-TZ2 in uncracked concrete [1,2]

1-in. KB-TZ2 uncracked concrete			Spacing factor in tension f_{AN}		Edge distance factor in tension f_{RN}		Spacing factor in shear [3] f_{AV}		Edge distance in shear ⊥ Toward edge f_{RV}		Edge distance in shear ∥ To edge f_{RV}		Concrete thickness factor in shear [4] f_{HV}	
Effective Embedment h_{ef}		in.	4	5-3/4	4	5-3/4	4	5-3/4	4	5-3/4	4	5-3/4	4	5-3/4
		(mm)	(102)	(146)	(102)	(146)	(102)	(146)	(102)	(146)	(102)	(146)	(102)	(146)
Nominal Embedment h_{nom}		in.	4-5/8	6-3/8	4-5/8	6-3/8	4-5/8	6-3/8	4-5/8	6-3/8	4-5/8	6-3/8	4-5/8	6-3/8
		(mm)	(117)	(162)	(117)	(162)	(117)	(162)	(117)	(162)	(117)	(162)	(117)	(162)
Spacing (s) / Edge Distance (c_a) / Concrete Thickness (h) - in. (mm)	3	(76)	n/a	n/a	n/a	0.292	n/a	n/a	n/a	0.081	n/a	0.162	n/a	n/a
	3-3/4	(95)	n/a	n/a	n/a	0.321	n/a	n/a	n/a	0.113	n/a	0.227	n/a	n/a
	4	(102)	n/a	n/a	n/a	0.331	n/a	n/a	n/a	0.125	n/a	0.250	n/a	n/a
	4-1/4	(108)	n/a	n/a	n/a	0.341	n/a	n/a	n/a	0.137	n/a	0.274	n/a	n/a
	4-3/4	(121)	n/a	0.638	n/a	0.362	n/a	0.549	n/a	0.162	n/a	0.324	n/a	n/a
	5	(127)	n/a	0.645	n/a	0.372	n/a	0.552	n/a	0.175	n/a	0.349	n/a	n/a
	6	(152)	n/a	0.674	n/a	0.415	n/a	0.563	n/a	0.230	n/a	0.415	n/a	n/a
	6-3/4	(171)	n/a	0.696	n/a	0.449	n/a	0.570	n/a	0.274	n/a	0.449	n/a	n/a
	8	(203)	0.833	0.732	0.727	0.508	0.621	0.583	0.620	0.354	0.727	0.508	0.696	n/a
	10	(254)	0.917	0.790	0.909	0.625	0.652	0.604	0.867	0.494	0.909	0.625	0.778	0.645
	12	(305)	1.000	0.848	1.000	0.750	0.682	0.625	1.000	0.650	1.000	0.750	0.853	0.707
	18	(457)		1.000		1.000	0.773	0.688		1.000		1.000	1.000	0.866
	24	(610)					0.864	0.750						1.000
	36	(914)					1.000	0.875						
	> 48	(1219)						1.000						

Table 17 — Load adjustment factors for Carbon Steel 1-in. diameter KB-TZ2 in cracked concrete [1,2]

1-in. KB-TZ2 cracked concrete			Spacing factor in tension f_{AN}		Edge distance factor in tension f_{RN}		Spacing factor in shear [3] f_{AV}		Edge distance in shear ⊥ Toward edge f_{RV}		Edge distance in shear ∥ To edge f_{RV}		Concrete thickness factor in shear [4] f_{HV}	
Effective Embedment h_{ef}		in.	4	5-3/4	4	5-3/4	4	5-3/4	4	5-3/4	4	5-3/4	4	5-3/4
		(mm)	(102)	(146)	(102)	(146)	(102)	(146)	(102)	(146)	(102)	(146)	(102)	(146)
Nominal Embedment h_{nom}		in.	4-5/8	6-3/8	4-5/8	6-3/8	4-5/8	6-3/8	4-5/8	6-3/8	4-5/8	6-3/8	4-5/8	6-3/8
		(mm)	(117)	(162)	(117)	(162)	(117)	(162)	(117)	(162)	(117)	(162)	(117)	(162)
Spacing (s) / Edge Distance (c_a) / Concrete Thickness (h) - in. (mm)	3	(76)	n/a	n/a	n/a	0.542	n/a	n/a	n/a	0.081	n/a	0.162	n/a	n/a
	3-3/4	(95)	n/a	n/a	n/a	0.596	n/a	n/a	n/a	0.113	n/a	0.226	n/a	n/a
	4	(102)	n/a	n/a	n/a	0.614	n/a	n/a	n/a	0.124	n/a	0.249	n/a	n/a
	4-1/4	(108)	n/a	n/a	n/a	0.633	n/a	n/a	n/a	0.136	n/a	0.272	n/a	n/a
	4-3/4	(121)	n/a	0.638	n/a	0.671	n/a	0.549	n/a	0.161	n/a	0.322	n/a	n/a
	5	(127)	n/a	0.645	n/a	0.690	n/a	0.552	n/a	0.174	n/a	0.348	n/a	n/a
	6	(152)	n/a	0.674	n/a	0.770	n/a	0.562	n/a	0.228	n/a	0.457	n/a	n/a
	6-3/4	(171)	n/a	0.696	n/a	0.833	n/a	0.570	n/a	0.273	n/a	0.545	n/a	n/a
	8	(203)	0.833	0.732	1.000	0.943	0.619	0.583	0.606	0.352	1.000	0.703	0.691	n/a
	10	(254)	0.917	0.790		1.000	0.649	0.604	0.847	0.491		0.983	0.773	0.644
	12	(305)	1.000	0.848			0.679	0.625	1.000	0.646		1.000	0.846	0.706
	18	(457)		1.000			0.769	0.687		1.000			1.000	0.864
	24	(610)					0.858	0.749						0.998
	36	(914)					1.000	0.874						1.000
	> 48	(1219)						0.998						

1 Linear interpolation not permitted
2 When combining multiple load adjustment factors (e.g. for a 4 anchor pattern in a corner with thin concrete member) the design can become very conservative. To optimize the design, use Hilti PROFIS Engineering Design software or perform anchor calculation using design equations from ACI 318 Ch. 17 or CSA A23.3 Annex D.
3 Spacing factor reduction in shear, f_{AV}, is applicable when edge distance $c < 3h_{ef}$. If $c \geq 3h_{ef}$ then $f_{AV} = f_{AN}$.
4 Concrete thickness reduction factor in shear, f_{HV}, is applicable when edge distance $c < 3h_{ef}$. If $c \geq 3h_{ef}$ then $f_{HV} = 1.0$.

If a reduction factor value is in a shaded cell, this indicates that this specific edge distance may not be permitted with a certain spacing (or vice versa). Check with Figure 2 and Table 5 to calculate permissible edge distance, spacing and concrete thickness combinations.

Table 18 — Hilti Stainless Steel KB-TZ2 design strength based on concrete failure modes in uncracked concrete per ACI 318 Ch. 17, applicable for both hammer and core drilled installations [1,2,3,4]

Nominal anchor diameter in.	Effective embedment in. (mm)	Nominal embedment in. (mm)	Tension (lesser of concrete breakout / pullout) - ΦN_n				Shear (lesser of concrete breakout or pryout) - ΦV_n			
			f'_c = 2,500 psi (17.2 MPa) lb (kN)	f'_c = 3,000 psi (20.7 MPa) lb (kN)	f'_c = 4,000 psi (27.6 MPa) lb (kN)	f'_c = 6,000 psi (41.1 MPa) lb (kN)	f'_c = 2,500 psi (17.2 MPa) lb (kN)	f'_c = 3,000 psi (20.7 MPa) lb (kN)	f'_c = 4,000 psi (27.6 MPa) lb (kN)	f'_c = 6,000 psi (41.1 MPa) lb (kN)
1/4	1-1/2 (38)	1 3/4 (44)	705 (3.1)	760 (3.4)	850 (3.8)	995 (4.4)	1,545 (6.9)	1,690 (7.5)	1,950 (8.7)	2,390 (10.6)
3/8	1-1/2 (38)	1 7/8 (48)	1,435 (6.4)	1,570 (7.0)	1,815 (8.1)	2,220 (9.9)	1,545 (6.9)	1,690 (7.5)	1,950 (8.7)	2,390 (10.6)
	2 (51)	2 1/2 (64)	2,205 (9.8)	2,415 (10.7)	2,790 (12.4)	3,420 (15.2)	2,375 (10.6)	2,605 (11.6)	3,005 (13.4)	3,680 (16.4)
	2-1/2 (64)	3 (76)	2,720 (12.1)	2,910 (12.9)	3,235 (14.4)	3,760 (16.7)	6,640 (29.5)	7,275 (32.4)	8,400 (37.4)	10,290 (45.8)
1/2	2 (51)	2 1/2 (64)	2,195 (9.8)	2,390 (10.6)	2,725 (12.1)	3,285 (14.6)	2,375 (10.6)	2,605 (11.6)	3,005 (13.4)	3,680 (16.4)
	2-1/2 (64)	3 (76)	2,605 (11.6)	2,855 (12.7)	3,295 (14.7)	4,040 (18.0)	6,640 (29.5)	7,275 (32.4)	8,400 (37.4)	10,290 (45.8)
	3-1/4 (83)	3 3/4 (95)	3,575 (15.9)	3,915 (17.4)	4,520 (20.1)	5,540 (24.6)	9,845 (43.8)	10,785 (48.0)	12,450 (55.4)	15,250 (67.8)
5/8	2-3/4 (70)	3 1/4 (83)	2,655 (11.8)	2,910 (12.9)	3,360 (14.9)	4,115 (18.3)	7,660 (34.1)	8,395 (37.3)	9,690 (43.1)	11,870 (52.8)
	3-1/4 (83)	3 3/4 (95)	3,910 (17.4)	4,220 (18.8)	4,765 (21.2)	5,645 (25.1)	9,845 (43.8)	10,785 (48.0)	12,450 (55.4)	15,250 (67.8)
	4 (102)	4 1/2 (114)	5,235 (23.3)	5,700 (25.4)	6,525 (29.0)	7,895 (35.1)	13,440 (59.8)	14,725 (65.5)	17,000 (75.6)	20,820 (92.6)
3/4	3-1/4 (83)	4 (102)	4,570 (20.3)	5,005 (22.3)	5,780 (25.7)	7,080 (31.5)	9,845 (43.8)	10,785 (48.0)	12,450 (55.4)	15,250 (67.8)
	3-3/4[6] (95)	4 1/2 (114)	6,370 (28.3)	6,980 (31.0)	8,060 (35.9)	9,870 (43.9)	13,725 (61.1)	15,035 (66.9)	17,360 (77.2)	21,265 (94.6)
	4-3/4 (121)	5 1/2 (140)	8,075 (35.9)	8,845 (39.3)	10,215 (45.4)	12,510 (55.6)	17,390 (77.4)	19,050 (84.7)	22,000 (97.9)	26,945 (119.9)
1	4 (102)	4 5/8 (117)	7,020 (31.2)	7,690 (34.2)	8,880 (39.5)	10,875 (48.4)	15,120 (67.3)	16,565 (73.7)	19,125 (85.1)	23,425 (104.2)
	5-3/4 (146)	6 3/8 (162)	12,100 (53.8)	13,255 (59.0)	15,305 (68.1)	18,745 (83.4)	26,060 (115.9)	28,545 (127.0)	32,965 (146.6)	40,370 (179.6)

Table 19 — Hilti Stainless Steel KB-TZ2 design strength based on concrete failure modes in cracked concrete per ACI 318 Ch. 17, applicable for both hammer and core drilled installations [1,2,3,4,5]

Nominal anchor diameter in.	Effective embedment in. (mm)	Nominal embedment in. (mm)	Tension (lesser of concrete breakout / pullout) - ΦN_n				Shear (lesser of concrete breakout or pryout) - ΦV_n			
			f'_c = 2,500 psi (17.2 MPa) lb (kN)	f'_c = 3,000 psi (20.7 MPa) lb (kN)	f'_c = 4,000 psi (27.6 MPa) lb (kN)	f'_c = 6,000 psi (41.1 MPa) lb (kN)	f'_c = 2,500 psi (17.2 MPa) lb (kN)	f'_c = 3,000 psi (20.7 MPa) lb (kN)	f'_c = 4,000 psi (27.6 MPa) lb (kN)	f'_c = 6,000 psi (41.1 MPa) lb (kN)
1/4	1-1/2 (38)	1 3/4 (44)	300 (1.3)	330 (1.5)	380 (1.7)	465 (2.1)	1,095 (4.9)	1,195 (5.3)	1,385 (6.2)	1,695 (7.5)
3/8	1-1/2 (38)	1 7/8 (48)	1,255 (5.6)	1,375 (6.1)	1,585 (7.1)	1,940 (8.6)	1,350 (6.0)	1,480 (6.6)	1,710 (7.6)	2,090 (9.3)
	2 (51)	2 1/2 (64)	1,930 (8.6)	2,115 (9.4)	2,440 (10.9)	2,990 (13.3)	2,080 (9.3)	2,275 (10.1)	2,630 (11.7)	3,220 (14.3)
	2-1/2 (64)	3 (76)	2,185 (9.7)	2,390 (10.6)	2,765 (12.3)	3,385 (15.1)	4,705 (20.9)	5,155 (22.9)	5,950 (26.5)	7,285 (32.4)
1/2	2 (51)	2 1/2 (64)	1,565 (7.0)	1,710 (7.6)	1,975 (8.8)	2,420 (10.8)	1,685 (7.5)	1,845 (8.2)	2,130 (9.5)	2,605 (11.6)
	2-1/2 (64)	3 (76)	2,700 (12.0)	2,955 (13.1)	3,415 (15.2)	4,180 (18.6)	5,810 (25.8)	6,365 (28.3)	7,350 (32.7)	9,000 (40.0)
	3-1/4[8] (83)	3 3/4 (95)	3,235 (14.4)	3,545 (15.8)	4,095 (18.2)	5,015 (22.3)	6,970 (31.0)	7,640 (34.0)	8,820 (39.2)	10,800 (48.0)
5/8	2-3/4 (70)	3 1/4 (83)	3,110 (13.8)	3,410 (15.2)	3,935 (17.5)	4,820 (21.4)	6,705 (29.8)	7,345 (32.7)	8,480 (37.7)	10,385 (46.2)
	3-1/4 (83)	3 3/4 (95)	4,000 (17.8)	4,380 (19.5)	5,060 (22.5)	6,195 (27.6)	8,615 (38.3)	9,435 (42.0)	10,895 (48.5)	13,345 (59.4)
	4 (102)	4 1/2 (114)	4,420 (19.7)	4,840 (21.5)	5,590 (24.9)	6,845 (30.4)	9,520 (42.3)	10,430 (46.4)	12,040 (53.6)	14,750 (65.6)
3/4	3-1/4 (83)	4 (102)	4,000 (17.8)	4,380 (19.5)	5,060 (22.5)	6,195 (27.6)	8,615 (38.3)	9,435 (42.0)	10,895 (48.5)	13,345 (59.4)
	3-3/4[7] (95)	4 1/2 (114)	4,955 (22.0)	5,430 (24.2)	6,270 (27.9)	7,680 (34.2)	10,675 (47.5)	11,695 (52.0)	13,505 (60.1)	16,540 (73.6)
	4-3/4 (121)	5 1/2 (140)	5,715 (25.4)	6,260 (27.8)	7,230 (32.2)	8,855 (39.4)	15,220 (67.7)	16,670 (74.2)	19,250 (85.6)	23,575 (104.9)
1	4 (102)	4 5/8 (117)	6,240 (27.8)	6,835 (30.4)	7,895 (35.1)	9,665 (43.0)	13,440 (59.8)	14,725 (65.5)	17,000 (75.6)	20,820 (92.6)
	5-3/4 (146)	6 3/8 (162)	9,410 (41.9)	10,310 (45.9)	11,905 (53.0)	14,580 (64.9)	20,270 (90.2)	22,205 (98.8)	25,640 (114.1)	31,400 (139.7)

1 See Section 3.1.8 to convert design strength value to ASD value.
2 Linear interpolation between embedment depths and concrete compressive strengths is not permitted.
3 Apply spacing, edge distance, and concrete thickness factors in tables 22 to 33 as necessary. Compare to the steel values in Table 20. The lesser of the values is to be used for the design.
4 Tabular values are for normal weight concrete only. For lightweight concrete multiply design strength by λ_a as follows: For sand-lightweight, λ_a = 0.68; for all-lightweight, λ_a = 0.60.
5 Tabular values are for static loads only. Seismic design is not permitted for uncracked concrete. For seismic tension loads, multiply cracked concrete tabular values in tension only by $\alpha_{N,seis}$ = 0.75.
No reduction needed for seismic shear, except for the 3/4 bolts where $\alpha_{V,seis}$ = 0.81. See Section 3.1.8 for additional information on seismic applications.
6 For core drilled installations of 3/4“ anchors installed at 3-3/4“ effective embedment, apply a reduction factor of 0.89 to the design tension strength.
7 For core drilled installations of 3/4" anchors installed at 3-3/4“ effective embedment, apply a reduction factor of 0.81 to the design tension strength.
8 For core drilled installations of 1/2" anchors installed at 3-1/4 effective embedment, apply a reduction factor of 0.85 to the design tension strength.

Table 20 — Hilti Stainless Steel KB-TZ2 design strength based on steel failure per ACI 318 Ch. 17 [1,2]

Nominal anchor diameter in.	Effective embedment depth in. (mm)			Tensile [3] ϕN_{sa} lb (kN)	Shear [4] ϕV_{sa} lb (kN)	Seismic Shear [5] ϕV_{sa} lb (kN)
1/4	1-1/2 (38)			2,190 (9.7)	950 (4.2)	720 (3.2)
3/8	1-1/2 (38)			4,635 (20.6)	3,000 (13.3)	3,000 (13.3)
3/8	2 (51)		2-1/2 (64)	4,635 (20.6)	3,175 (14.1)	3,175 (14.1)
1/2	2 (51)	2-1/2 (64)	3-1/4 (83)	8,905 (39.6)	5,425 (24.1)	5,425 (24.1)
5/8	2-3/4 (70)	3-1/4 (83)	4 (102)	14,125 (62.8)	8,030 (35.7)	8,030 (35.7)
3/4	3-1/4 (83)	3-3/4 (95)	4-3/4 (121)	18,035 (80.2)	10,765 (47.9)	8,755 (38.9)
1 (25.4)	4 (102)			35,215 (156.6)	14,920 (66.4)	8,755 (38.9)
1 (25.4)	5-3/4 (146)			35,215 (156.6)	20,410 (90.8)	8,755 (38.9)

1 See Section 3.1.8 to convert design strength value to ASD value.
2 Hilti KB-TZ2 stainless steel anchors are to be considered ductile steel elements.
3 Tensile $\phi N_{sa} = \phi A_{se,N} f_{uta}$ as noted in ACI 318 Ch. 17.
4 Shear values determined by static shear tests with $\phi V_{sa} < \phi\ 0.60\ A_{se,V} f_{uta}$ as noted in ACI 318 Ch. 17.
5 Seismic shear values determined by seismic shear tests with $\phi V_{sa} \leq \phi\ 0.60\ A_{se,V} f_{uta}$ as noted in ACI 318 Ch. 17.
See Section 3.1.8 for additional information on seismic applications.

Figure 3

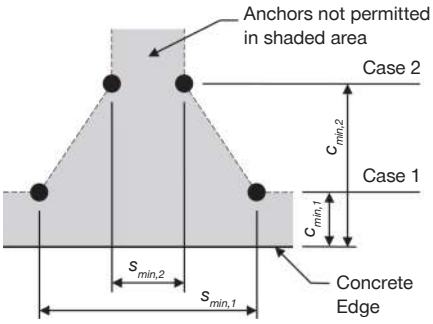

For a specific edge distance, the permitted spacing is calculated as follows:

$$s \geq s_{min,2} + \frac{(s_{min,1} - s_{min,2})}{(c_{min,1} - c_{min,2})}(c - c_{min,2})$$

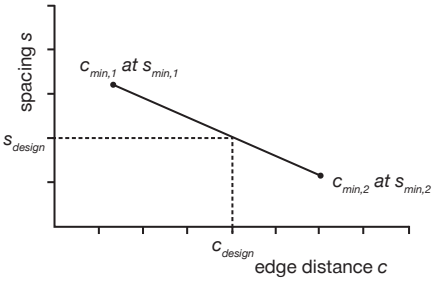

Table 21 — Hilti KB-TZ2 stainless steel installation parameters[1]

Setting information	Symbol	Units	Nominal Anchor diameter (in.)													
			1/4	3/8			1/2			5/8			3/4		1	
Effective embedment	h_{ef}	in.	1-1/2	1-1/2	2	2-1/2	2	2-1/2	3 1/4	2-3/4	3-1/4	4	3-1/4	3-3/4	4-3/4	4	5-3/4
		(mm)	(38)	(38)	(51)	(64)	(51)	(64)	(83)	(70)	(83)	(102)	(83)	(95)	(121)	(102)	(146)
Min. member thickness	h_{min}	in.	3-1/4	3-1/4	4	5	4	5	5-1/2	5	5-1/2	6	5-1/2	6	8	8	10
		(mm)	(83)	(83)	(102)	(127)	(102)	(127)	(140)	(127)	(140)	(152)	(140)	(152)	(203)	(203)	(254)
Case 1	$c_{min,1}$	in.	1-1/2	5	2-1/2	2-1/2	2-3/4	2-1/2	2-1/4	4	3-1/4	2-1/4	5	4	3 3/4	3-3/4	3
		(mm)	(38)	(127)	(64)	(64)	(70)	(64)	(57)	(102)	(83)	(57)	(127)	(102)	(95)	(95)	(76)
	for $s_{min,1} \geq$	in.	1-1/2	8	5	5	5-1/2	4-1/2	5-1/4	7	5-1/2	7	11	7-1/2	5 3/4	10	6-3/4
		(mm)	(38)	(203)	(127)	(127)	(140)	(114)	(133)	(178)	(140)	(178)	(279)	(191)	(146)	(254)	(171)
Case 2	$c_{min,2}$	in.	1-1/2	8	4	3-1/2	4-1/8	4-1/2	4-1/2	5-1/2	4	4-1/4	8	6	5-1/4	4-1/4	3-3/4
		(mm)	(38)	(203)	(102)	(89)	(105)	(114)	(114)	(140)	(102)	(108)	(203)	(152)	(133)	(108)	(95)
	for $s_{min,2} \geq$	in.	1-1/2	5	2-1/4	2-1/4	2-3/4	2-1/2	2	5-1/2	2-3/4	3	5	4	4	5	4-3/4
		(mm)	(38)	(127)	(57)	(57)	(70)	(64)	(51)	(140)	(70)	(76)	(127)	(102)	(102)	(127)	(121)

1 Linear interpolation is permitted to establish an edge distance and spacing combination between Case 1 and Case 2. Linear interpolation for a specific edge distance c, where $c_{min,1} < c < c_{min,2}$, will determine the permissible spacings.

Table 22 — Load adjustment factors for Stainless Steel 1/4-in. diameter KB-TZ2 in uncracked concrete [1,2]

1/4-in. KB-TZ2 uncracked concrete			Spacing factor in tension f_{AN}	Edge distance factor in tension f_{RN}	Spacing factor in shear [3] f_{AV}	Edge distance in shear ⊥ Toward edge f_{RV}	Edge distance in shear ∥ To edge f_{RV}	Conc. thickness factor in shear [4] f_{HV}
Effective Embedment h_{ef}		in.	1-1/2	1-1/2	1-1/2	1-1/2	1-1/2	1-1/2
		(mm)	(38)	(38)	(38)	(38)	(38)	(38)
Nominal Embedment h_{nom}		in.	1-3/4	1-3/4	1-3/4	1-3/4	1-3/4	1-3/4
		(mm)	(44)	(44)	(44)	(44)	(44)	(44)
Spacing (s) / Edge Distance (c_a) / Concrete Thickness (h) - in. (mm)	1-1/2	(38)	0.67	0.42	0.56	0.23	0.42	n/a
	2	(51)	0.72	0.51	0.58	0.35	0.51	n/a
	2-1/2	(64)	0.78	0.63	0.60	0.49	0.63	n/a
	3	(76)	0.83	0.75	0.63	0.65	0.75	n/a
	3-1/4	(83)	0.86	0.81	0.64	0.73	0.81	0.74
	3-1/2	(89)	0.89	0.88	0.65	0.82	0.88	0.76
	4	(102)	0.94	1.00	0.67	1.00	1.00	0.82
	5	(127)	1.00		0.71			0.91
	6	(152)			0.75			1.00
	7	(178)			0.79			
	8	(203)			0.83			
	9	(229)			0.88			
	> 12	(305)			1.00			

3.3.5

Table 23 — Load adjustment factors for Stainless Steel 1/4-in. diameter KB-TZ2 in cracked concrete [1,2]

1/4-in. KB-TZ2 cracked concrete			Spacing factor in tension f_{AN}	Edge distance factor in tension f_{RN}	Spacing factor in shear [3] f_{AV}	Edge distance in shear ⊥ Toward edge f_{RV}	Edge distance in shear ∥ To edge f_{RV}	Conc. thickness factor in shear [4] f_{HV}
Effective Embedment h_{ef}		in.	1-1/2	1-1/2	1-1/2	1-1/2	1-1/2	1-1/2
		(mm)	(38)	(38)	(38)	(38)	(38)	(38)
Nominal Embedment h_{nom}		in.	1-3/4	1-3/4	1-3/4	1-3/4	1-3/4	1-3/4
		(mm)	(44)	(44)	(44)	(44)	(44)	(44)
Spacing (s) / Edge Distance (c_a) / Concrete Thickness (h) - in. (mm)	1-1/2	(38)	0.67	0.75	0.57	0.29	0.59	n/a
	2	(51)	0.72	0.91	0.60	0.45	0.91	n/a
	2-1/2	(64)	0.78	1.00	0.62	0.63	1.00	n/a
	3	(76)	0.83		0.65	0.83		n/a
	3-1/4	(83)	0.86		0.66	0.94		0.80
	3-1/2	(89)	0.89		0.67	1.00		0.83
	4	(102)	0.94		0.70			0.89
	5	(127)	1.00		0.75			0.99
	6	(152)			0.80			1.00
	7	(178)			0.84			
	8	(203)			0.89			
	9	(229)			0.94			
	> 12	(305)			1.00			

1 Linear interpolation not permitted
2 When combining multiple load adjustment factors (e.g. for a 4 anchor pattern in a corner with thin concrete member) the design can become very conservative. To optimize the design, use Hilti PROFIS Engineering Design software or perform anchor calculation using design equations from ACI 318 Ch. 17 or CSA A23.3 Annex D.
3 Spacing factor reduction in shear, f_{AV}, is applicable when edge distance $c < 3h_{ef}$. If $c \geq 3h_{ef}$, then $f_{AV} = f_{AN}$.
4 Concrete thickness reduction factor in shear, f_{HV}, is applicable when edge distance $c < 3h_{ef}$. If $c \geq 3h_{ef}$ then $f_{HV} = 1.0$.

Table 24 — Load adjustment factors for Stainless Steel 3/8-in. diameter KB-TZ2 in uncracked concrete [1,4]

3/8-in. KB-TZ2 uncracked concrete			Spacing factor in tension f_{AN}			Edge distance factor in tension f_{RN}			Spacing factor in shear [3] f_{AV}			Edge distance in shear ⊥ Toward edge f_{RV}			Edge distance in shear ∥ To edge f_{RV}			Concrete thickness factor in shear [4] f_{HV}		
Effective Embedment h_{ef}		in.	1-1/2	2	2-1/2	1-1/2	2	2-1/2	1-1/2	2	2-1/2	1-1/2	2	2-1/2	1-1/2	2	2-1/2	1-1/2	2	2-1/2
		(mm)	(38)	(51)	(64)	(38)	(51)	(64)	(38)	(51)	(64)	(38)	(51)	(64)	(38)	(51)	(64)	(38)	(51)	(64)
Nominal Embedment h_{nom}		in.	1-7/8	2-1/2	3	1-7/8	2-1/2	3	1-7/8	2-1/2	3	1-7/8	2-1/2	3	1-7/8	2-1/2	3	1-7/8	2-1/2	3
		(mm)	(48)	(64)	(76)	(48)	(64)	(76)	(48)	(64)	(76)	(48)	(64)	(76)	(48)	(64)	(76)	(48)	(64)	(76)
Spacing (s) / Edge Distance (c_a) / Concrete Thickness (h) - in. (mm)	2-1/4	(57)	n/a	0.69	0.65	n/a	n/a	n/a	n/a	0.57	0.55	n/a	n/a	n/a	n/a	n/a	n/a	n/a	n/a	n/a
	2-1/2	(64)	n/a	0.71	0.67	n/a	0.48	0.68	n/a	0.58	0.55	n/a	0.31	0.18	n/a	0.48	0.37	n/a	n/a	n/a
	3	(76)	n/a	0.75	0.70	n/a	0.55	0.77	n/a	0.59	0.56	n/a	0.40	0.24	n/a	0.55	0.48	n/a	n/a	n/a
	3-1/4	(83)	n/a	0.77	0.72	n/a	0.59	0.81	n/a	0.60	0.57	n/a	0.45	0.27	n/a	0.59	0.54	0.69	n/a	n/a
	3-1/2	(89)	n/a	0.79	0.73	n/a	0.64	0.86	n/a	0.61	0.58	n/a	0.51	0.30	n/a	0.64	0.61	0.72	n/a	n/a
	4	(102)	n/a	0.83	0.77	n/a	0.73	0.97	n/a	0.62	0.59	n/a	0.62	0.37	n/a	0.73	0.74	0.77	0.70	n/a
	5	(127)	1.00	0.92	0.83	1.00	0.91	1.00	0.69	0.65	0.61	1.00	0.87	0.52	1.00	0.91	1.00	0.86	0.78	0.66
	6	(152)	1.00	1.00	0.90	1.00	1.00		0.72	0.68	0.63	1.00	1.00	0.68	1.00	1.00		0.94	0.85	0.72
	8	(203)	1.00		1.00	1.00			0.80	0.74	0.67	1.00		1.00	1.00			1.00	0.98	0.83
	10	(254)							0.87	0.80	0.71								1.00	0.93
	12	(305)							0.94	0.86	0.76									1.00
	18	(457)							1.00	1.00	0.89									
	> 24	(610)									1.00									

Table 25 — Load adjustment factors for Stainless Steel 3/8-in. diameter KB-TZ2 in cracked concrete [1,4]

3/8-in. KB-TZ2 cracked concrete			Spacing factor in tension f_{AN}			Edge distance factor in tension f_{RN}			Spacing factor in shear [3] f_{AV}			Edge distance in shear ⊥ Toward edge f_{RV}			Edge distance in shear ∥ To edge f_{RV}			Concrete thickness factor in shear [4] f_{HV}		
Effective Embedment h_{ef}		in.	1-1/2	2	2-1/2	1-1/2	2	2-1/2	1-1/2	2	2-1/2	1-1/2	2	2-1/2	1-1/2	2	2-1/2	1-1/2	2	2-1/2
		(mm)	(38)	(51)	(64)	(38)	(51)	(64)	(38)	(51)	(64)	(38)	(51)	(64)	(38)	(51)	(64)	(38)	(51)	(64)
Nominal Embedment h_{nom}		in.	1-7/8	2-1/2	3	1-7/8	2-1/2	3	1-7/8	2-1/2	3	1-7/8	2-1/2	3	1-7/8	2-1/2	3	1-7/8	2-1/2	3
		(mm)	(48)	(64)	(76)	(48)	(64)	(76)	(48)	(64)	(76)	(48)	(64)	(76)	(48)	(64)	(76)	(48)	(64)	(76)
Spacing (s) / Edge Distance (c_a) / Concrete Thickness (h) - in. (mm)	2-1/4	(57)	n/a	0.69	0.65	n/a	n/a	n/a	n/a	0.58	0.55	n/a	n/a	n/a	n/a	n/a	n/a	n/a	n/a	n/a
	2-1/2	(64)	n/a	0.71	0.67	n/a	0.87	0.75	n/a	0.59	0.55	n/a	0.40	0.18	n/a	0.80	0.37	n/a	n/a	n/a
	3	(76)	n/a	0.75	0.70	n/a	1.00	0.85	n/a	0.61	0.56	n/a	0.52	0.24	n/a	1.00	0.48	n/a	n/a	n/a
	3-1/4	(83)	n/a	0.77	0.72	n/a	1.00	0.90	n/a	0.62	0.57	n/a	0.59	0.27	n/a	1.00	0.55	0.78	n/a	n/a
	3-1/2	(89)	n/a	0.79	0.73	n/a	1.00	0.95	n/a	0.63	0.58	n/a	0.66	0.31	n/a	1.00	0.61	0.81	n/a	n/a
	4	(102)	n/a	0.83	0.77	n/a	1.00	1.00	n/a	0.64	0.59	n/a	0.81	0.37	n/a	1.00	0.75	0.86	0.76	n/a
	5	(127)	1.00	0.92	0.83	1.00			0.73	0.68	0.61	1.00	1.00	0.52	1.00		1.00	0.96	0.85	0.66
	6	(152)	1.00	1.00	0.90	1.00			0.78	0.72	0.63	1.00		0.69	1.00			1.00	0.93	0.72
	8	(203)	1.00		1.00	1.00			0.87	0.79	0.67	1.00		1.00	1.00				1.00	0.83
	10	(254)							0.96	0.86	0.72									0.93
	12	(305)							1.00	0.93	0.76									1.00
	18	(457)								1.00	0.89									
	> 24	(610)									1.00									

1 Linear interpolation not permitted
2 When combining multiple load adjustment factors (e.g. for a 4 anchor pattern in a corner with thin concrete member) the design can become very conservative. To optimize the design, use Hilti PROFIS Engineering Design software or perform anchor calculation using design equations from ACI 318 Ch. 17 or CSA A23.3 Annex D.
3 Spacing factor reduction in shear, f_{AV}, is applicable when edge distance $c < 3h_{ef}$. If $c \geq 3h_{ef}$ then $f_{AV} = f_{AN}$.
4 Concrete thickness reduction factor in shear, f_{HV}, is applicable when edge distance $c < 3h_{ef}$. If $c \geq 3h_{ef}$ then $f_{HV} = 1.0$.

If a reduction factor value is in a shaded cell, this indicates that this specific edge distance may not be permitted with a certain spacing (or vice versa). Check with Figure 3 and Table 21 to calculate permissible edge distance, spacing and concrete thickness combinations.

Table 26 — Load adjustment factors for Stainless Steel 1/2-in. diameter KB-TZ2 in uncracked concrete [1,2]

1/2-in. KB-TZ2 uncracked concrete		Spacing factor in tension f_{AN}			Edge distance factor in tension f_{RN}			Spacing factor in shear [3] f_{AV}			Edge distance in shear ⊥ Toward edge f_{RV}			Edge distance in shear ‖ To edge f_{RV}			Concrete thickness factor in shear [4] f_{HV}		
Effective Embedment h_{ef}	in.	2	2-1/2	3-1/4	2	2-1/2	3-1/4	2	2-1/2	3-1/4	2	2-1/2	3-1/4	2	2-1/2	3-1/4	2	2-1/2	3-1/4
	(mm)	(51)	(64)	(83)	(51)	(64)	(83)	(51)	(64)	(83)	(51)	(64)	(83)	(51)	(64)	(83)	(51)	(64)	(83)
Nominal Embedment h_{nom}	in.	2-1/2	3	3-3/4	2-1/2	3	3-3/4	2-1/2	3	3-3/4	2-1/2	3	3-3/4	2-1/2	3	3-3/4	2-1/2	3	3-3/4
	(mm)	(64)	(76)	(95)	(64)	(76)	(95)	(64)	(76)	(95)	(64)	(76)	(95)	(64)	(76)	(95)	(64)	(76)	(95)
Spacing (s) / Edge Distance (c_a) / Concrete Thickness (h) - in. (mm)																			
2	(51)	n/a	n/a	0.60	n/a	n/a	n/a	n/a	n/a	0.54	n/a	n/a	n/a	n/a	n/a	n/a	n/a	n/a	n/a
2-1/4	(57)	n/a	n/a	0.62	n/a	n/a	0.40	n/a	n/a	0.54	n/a	n/a	0.12	n/a	n/a	0.24	n/a	n/a	n/a
2-1/2	(64)	n/a	n/a	0.63	n/a	0.45	0.42	n/a	n/a	0.55	n/a	0.20	0.14	n/a	0.40	0.28	n/a	n/a	n/a
2-3/4	(70)	n/a	0.68	0.64	0.51	0.48	0.44	n/a	0.56	0.55	0.35	0.23	0.16	0.51	0.46	0.33	n/a	n/a	n/a
3	(76)	0.75	0.70	0.65	0.55	0.51	0.46	0.59	0.57	0.55	0.40	0.26	0.19	0.55	0.51	0.37	n/a	n/a	n/a
4	(102)	0.83	0.77	0.71	0.73	0.64	0.56	0.62	0.59	0.57	0.62	0.40	0.29	0.73	0.64	0.56	0.70	n/a	n/a
4-1/8	(105)	0.84	0.78	0.71	0.75	0.66	0.57	0.63	0.59	0.57	0.65	0.42	0.30	0.75	0.66	0.57	0.71	n/a	n/a
4-1/2	(114)	0.88	0.80	0.73	0.82	0.72	0.61	0.64	0.60	0.58	0.74	0.48	0.34	0.82	0.72	0.61	0.74	n/a	n/a
4-3/4	(121)	0.90	0.82	0.74	0.86	0.76	0.64	0.64	0.61	0.59	0.80	0.52	0.37	0.86	0.76	0.64	0.76	n/a	n/a
5	(127)	0.92	0.83	0.76	0.91	0.80	0.67	0.65	0.61	0.59	0.87	0.56	0.40	0.91	0.80	0.67	0.78	0.67	n/a
5-1/4	(133)	0.94	0.85	0.77	0.95	0.84	0.70	0.66	0.62	0.60	0.93	0.61	0.43	0.95	0.84	0.70	0.80	0.69	n/a
5-1/2	(140)	0.96	0.87	0.78	1.00	0.88	0.73	0.67	0.63	0.60	1.00	0.65	0.46	1.00	0.88	0.73	0.82	0.71	0.63
6	(152)	1.00	0.90	0.81		0.96	0.80	0.68	0.64	0.61		0.74	0.53		0.96	0.80	0.85	0.74	0.66
8	(203)		1.00	0.91		1.00	1.00	0.74	0.68	0.64		1.00	0.81		1.00	1.00	0.98	0.85	0.76
12	(305)			1.00				0.86	0.77	0.72			1.00				1.00	1.00	0.93
18	(457)							1.00	0.91	0.83									1.00
24	(610)								1.00	0.93									
> 30	(762)									1.00									

3.3.5

Table 27 — Load adjustment factors for Stainless Steel 1/2-in. diameter KB-TZ2 in cracked concrete [1,2]

1/2-in. KB-TZ2 cracked concrete		Spacing factor in tension f_{AN}			Edge distance factor in tension f_{RN}			Spacing factor in shear [3] f_{AV}			Edge distance in shear ⊥ Toward edge f_{RV}			Edge distance in shear ‖ To edge f_{RV}			Concrete thickness factor in shear [4] f_{HV}		
Effective Embedment h_{ef}	in.	2	2-1/2	3-1/4	2	2-1/2	3-1/4	2	2-1/2	3-1/4	2	2-1/2	3-1/4	2	2-1/2	3-1/4	2	2-1/2	3-1/4
	(mm)	(51)	(64)	(83)	(51)	(64)	(83)	(51)	(64)	(83)	(51)	(64)	(83)	(51)	(64)	(83)	(51)	(64)	(83)
Nominal Embedment h_{nom}	in.	2-1/2	3	3-3/4	2-1/2	3	3-3/4	2-1/2	3	3-3/4	2-1/2	3	3-3/4	2-1/2	3	3-3/4	2-1/2	3	3-3/4
	(mm)	(64)	(76)	(95)	(64)	(76)	(95)	(64)	(76)	(95)	(64)	(76)	(95)	(64)	(76)	(95)	(64)	(76)	(95)
Spacing (s) / Edge Distance (c_a) / Concrete Thickness (h) - in. (mm)																			
2	(51)	n/a	n/a	0.60	n/a	n/a	n/a	n/a	n/a	0.54	n/a	n/a	n/a	n/a	n/a	n/a	n/a	n/a	n/a
2-1/4	(57)	n/a	n/a	0.62	n/a	n/a	0.61	n/a	n/a	0.54	n/a	n/a	0.12	n/a	n/a	0.24	n/a	n/a	n/a
2-1/2	(64)	n/a	n/a	0.63	n/a	0.75	0.65	n/a	n/a	0.55	n/a	0.16	0.14	n/a	0.33	0.29	n/a	n/a	n/a
2-3/4	(70)	n/a	0.68	0.64	0.93	0.80	0.68	n/a	0.55	0.55	0.62	0.19	0.16	0.93	0.38	0.33	n/a	n/a	n/a
3	(76)	0.75	0.70	0.65	1.00	0.85	0.71	0.63	0.56	0.55	0.71	0.21	0.19	1.00	0.43	0.38	n/a	n/a	n/a
4	(102)	0.83	0.77	0.71	1.00	1.00	0.86	0.68	0.58	0.57	1.00	0.33	0.29	1.00	0.66	0.58	0.84	n/a	n/a
4-1/8	(105)	0.84	0.78	0.71	1.00	1.00	0.88	0.68	0.58	0.58	1.00	0.34	0.30	1.00	0.69	0.61	0.85	n/a	n/a
4-1/2	(114)	0.88	0.80	0.73		1.00	0.94	0.70	0.59	0.58		0.39	0.34		0.79	0.69	0.89	n/a	n/a
4-3/4	(121)	0.90	0.82	0.74			0.98	0.71	0.59	0.59		0.43	0.37		0.85	0.75	0.91	n/a	n/a
5	(127)	0.92	0.83	0.76			1.00	0.72	0.60	0.59		0.46	0.40		0.92	0.81	0.94	0.63	n/a
5-1/4	(133)	0.94	0.85	0.77				0.73	0.60	0.60		0.49	0.43		0.99	0.87	0.96	0.65	n/a
5-1/2	(140)	0.96	0.87	0.78				0.74	0.61	0.60		0.53	0.47		1.00	0.93	0.98	0.66	0.63
6	(152)	1.00	0.90	0.81				0.76	0.62	0.61		0.60	0.53			1.00	1.00	0.69	0.66
8	(203)		1.00	0.91				0.85	0.66	0.65		0.93	0.82					0.80	0.76
12	(305)			1.00				1.00	0.74	0.72		1.00	1.00					0.98	0.94
18	(457)								0.86	0.83								1.00	1.00
24	(610)								0.98	0.94									
> 30	(762)								1.00	1.00									

1 Linear interpolation not permitted
2 When combining multiple load adjustment factors (e.g. for a 4 anchor pattern in a corner with thin concrete member) the design can become very conservative. To optimize the design, use Hilti PROFIS Engineering Design software or perform anchor calculation using design equations from ACI 318 Ch. 17 or CSA A23.3 Annex D.
3 Spacing factor reduction in shear, f_{AV}, is applicable when edge distance $c < 3h_{ef}$. If $c \geq 3h_{ef}$ then $f_{AV} = f_{AN}$.
4 Concrete thickness reduction factor in shear, f_{HV}, is applicable when edge distance $c < 3h_{ef}$. If $c \geq 3h_{ef}$ then $f_{HV} = 1.0$.

If a reduction factor value is in a shaded cell, this indicates that this specific edge distance may not be permitted with a certain spacing (or vice versa). Check with Figure 3 and Table 21 to calculate permissible edge distance, spacing and concrete thickness combinations.

Table 28 — Load adjustment factors for Stainless Steel 5/8-in. diameter KB-TZ2 in uncracked concrete [1,2]

5/8-in. KB-TZ2 uncracked concrete		Spacing factor in tension f_{AN}			Edge distance factor in tension f_{RN}			Spacing factor in shear [3] f_{AV}			Edge distance in shear ⊥ Toward edge f_{RV}			Edge distance in shear ‖ To edge f_{RV}			Concrete thickness factor in shear [4] f_{HV}		
Effective Embedment h_{ef}	in.	2-3/4	3-1/4	4	2-3/4	3-1/4	4	2-3/4	3-1/4	4	2-3/4	3-1/4	4	2-3/4	3-1/4	4	2-3/4	3-1/4	4
	(mm)	(70)	(83)	(102)	(70)	(83)	(102)	(70)	(83)	(102)	(70)	(83)	(102)	(70)	(83)	(102)	(70)	(83)	(102)
Nominal Embedment h_{nom}	in.	3-1/4	3-3/4	4-1/2	3-1/4	3-3/4	4-1/2	3-1/4	3-3/4	4-1/2	3-1/4	3-3/4	4-1/2	3-1/4	3-3/4	4-1/2	3-1/4	3-3/4	4-1/2
	(mm)	(83)	(95)	(114)	(83)	(95)	(114)	(83)	(95)	(114)	(83)	(95)	(114)	(83)	(95)	(114)	(83)	(95)	(114)
Spacing (s) / Edge Distance (c_a) / Concrete Thickness (h) - in. (mm)																			
2-1/4	(57)	n/a	n/a	n/a	n/a	n/a	0.38	n/a	n/a	n/a	n/a	n/a	0.10	n/a	n/a	0.20	n/a	n/a	n/a
2-3/4	(70)	n/a	0.64	n/a	n/a	n/a	0.42	n/a	0.55	n/a	n/a	n/a	0.13	n/a	n/a	0.27	n/a	n/a	n/a
3	(76)	n/a	0.65	0.63	n/a	n/a	0.44	n/a	0.56	0.55	n/a	n/a	0.15	n/a	n/a	0.30	n/a	n/a	n/a
3-1/4	(83)	n/a	0.67	0.64	n/a	0.56	0.46	n/a	0.56	0.55	n/a	0.22	0.17	n/a	0.45	0.34	n/a	n/a	n/a
4	(102)	n/a	0.71	0.67	0.40	0.65	0.51	n/a	0.58	0.56	0.25	0.31	0.23	0.40	0.61	0.47	n/a	n/a	n/a
4-1/4	(108)	n/a	0.72	0.68	0.43	0.67	0.53	n/a	0.58	0.57	0.28	0.34	0.26	0.43	0.67	0.51	n/a	n/a	n/a
5	(127)	n/a	0.76	0.71	0.50	0.77	0.60	n/a	0.59	0.58	0.35	0.43	0.33	0.50	0.77	0.60	0.58	n/a	n/a
5-1/2	(140)	0.83	0.78	0.73	0.55	0.85	0.64	0.59	0.60	0.59	0.41	0.49	0.38	0.55	0.85	0.64	0.61	0.65	n/a
6	(152)	0.86	0.81	0.75	0.60	0.92	0.69	0.60	0.61	0.59	0.46	0.56	0.43	0.60	0.92	0.69	0.63	0.67	0.62
7	(178)	0.92	0.86	0.79	0.70	1.00	0.80	0.62	0.63	0.61	0.59	0.71	0.54	0.70	1.00	0.80	0.68	0.73	0.67
8	(203)	0.98	0.91	0.83	0.80		0.91	0.63	0.65	0.63	0.72	0.87	0.66	0.80		0.91	0.73	0.78	0.71
10	(254)	1.00	1.00	0.92	1.00		1.00	0.67	0.69	0.66	1.00	1.00	0.92	1.00		1.00	0.82	0.87	0.80
12	(305)			1.00				0.70	0.73	0.69			1.00				0.89	0.95	0.87
24	(610)							0.90	0.95	0.88							1.00	1.00	1.00
> 36	(914)							1.00	1.00	1.00									

Table 29 — Load adjustment factors for Stainless Steel 5/8-in. diameter KB-TZ2 in cracked concrete [1,2]

5/8-in. KB-TZ2 cracked concrete		Spacing factor in tension f_{AN}			Edge distance factor in tension f_{RN}			Spacing factor in shear [3] f_{AV}			Edge distance in shear ⊥ Toward edge f_{RV}			Edge distance in shear ‖ To edge f_{RV}			Concrete thickness factor in shear [4] f_{HV}		
Effective Embedment h_{ef}	in.	2-3/4	3-1/4	4	2-3/4	3-1/4	4	2-3/4	3-1/4	4	2-3/4	3-1/4	4	2-3/4	3-1/4	4	2-3/4	3-1/4	4
	(mm)	(70)	(83)	(102)	(70)	(83)	(102)	(70)	(83)	(102)	(70)	(83)	(102)	(70)	(83)	(102)	(70)	(83)	(102)
Nominal Embedment h_{nom}	in.	3-1/4	3-3/4	4-1/2	3-1/4	3-3/4	4-1/2	3-1/4	3-3/4	4-1/2	3-1/4	3-3/4	4-1/2	3-1/4	3-3/4	4-1/2	3-1/4	3-3/4	4-1/2
	(mm)	(83)	(95)	(114)	(83)	(95)	(114)	(83)	(95)	(114)	(83)	(95)	(114)	(83)	(95)	(114)	(83)	(95)	(114)
Spacing (s) / Edge Distance (c_a) / Concrete Thickness (h) - in. (mm)																			
2-1/4	(57)	n/a	n/a	n/a	n/a	n/a	0.56	n/a	n/a	n/a	n/a	n/a	0.10	n/a	n/a	0.20	n/a	n/a	n/a
2-3/4	(70)	n/a	0.64	n/a	n/a	n/a	0.61	n/a	0.55	n/a	n/a	n/a	0.13	n/a	n/a	0.27	n/a	n/a	n/a
3	(76)	n/a	0.65	0.63	n/a	n/a	0.64	n/a	0.55	0.55	n/a	n/a	0.15	n/a	n/a	0.31	n/a	n/a	n/a
3-1/4	(83)	n/a	0.67	0.64	n/a	0.75	0.66	n/a	0.55	0.55	n/a	0.18	0.17	n/a	0.37	0.35	n/a	n/a	n/a
4	(102)	n/a	0.71	0.67	0.98	0.86	0.75	n/a	0.57	0.56	0.31	0.25	0.24	0.62	0.50	0.47	n/a	n/a	n/a
4-1/4	(108)	n/a	0.72	0.68	1.00	0.90	0.78	n/a	0.57	0.57	0.34	0.27	0.26	0.68	0.55	0.52	n/a	n/a	n/a
5	(127)	n/a	0.76	0.71	1.00	1.00	0.87	n/a	0.58	0.58	0.43	0.35	0.33	0.87	0.70	0.66	0.62	n/a	n/a
5-1/2	(140)	0.83	0.78	0.73	1.00		0.93	0.61	0.59	0.59	0.50	0.40	0.38	1.00	0.81	0.76	0.65	0.60	n/a
6	(152)	0.86	0.81	0.75			1.00	0.61	0.60	0.60	0.57	0.46	0.43		0.92	0.87	0.68	0.63	0.62
7	(178)	0.92	0.86	0.79				0.63	0.62	0.61	0.72	0.58	0.55		1.00	1.00	0.73	0.68	0.67
8	(203)	0.98	0.91	0.83				0.65	0.63	0.63	0.88	0.71	0.67				0.78	0.73	0.71
10	(254)	1.00	1.00	0.92				0.69	0.67	0.66	1.00	0.99	0.93				0.87	0.81	0.80
12	(305)			1.00				0.73	0.70	0.69		1.00	1.00				0.96	0.89	0.87
24	(610)							0.96	0.90	0.88							1.00	1.00	1.00
> 36	(914)							1.00	1.00	1.00									

1 Linear interpolation not permitted
2 When combining multiple load adjustment factors (e.g. for a 4 anchor pattern in a corner with thin concrete member) the design can become very conservative. To optimize the design, use Hilti PROFIS Engineering Design software or perform anchor calculation using design equations from ACI 318 Ch. 17 or CSA A23.3 Annex D.
3 Spacing factor reduction in shear, f_{AV}, is applicable when edge distance $c < 3h_{ef}$. If $c \geq 3h_{ef}$ then $f_{AV} = f_{AN}$.
4 Concrete thickness reduction factor in shear, f_{HV}, is applicable when edge distance $c < 3h_{ef}$. If $c \geq 3h_{ef}$ then $f_{HV} = 1.0$.

If a reduction factor value is in a shaded cell, this indicates that this specific edge distance may not be permitted with a certain spacing (or vice versa). Check with Figure 3 and Table 21 to calculate permissible edge distance, spacing and concrete thickness combinations.

Table 30 — Load adjustment factors for Stainless Steel 3/4-in. diameter KB-TZ2 in uncracked concrete [1,2]

3/4-in. KB-TZ2 uncracked concrete			Spacing factor in tension f_{AN}			Edge distance factor in tension f_{RN}			Spacing factor in shear [3] f_{AV}			Edge distance in shear ⊥ Toward edge f_{RV}			Edge distance in shear ∥ To edge f_{RV}			Concrete thickness factor in shear [4] f_{HV}		
Effective Embedment h_{ef}		in.	3-1/4	3-3/4	4-3/4	3-1/4	3-3/4	4-3/4	3-1/4	3-3/4	4-3/4	3-1/4	3-3/4	4-3/4	3-1/4	3-3/4	4-3/4	3-1/4	3-3/4	4-3/4
		(mm)	(83)	(95)	(121)	(83)	(95)	(121)	(83)	(95)	(121)	(83)	(95)	(121)	(83)	(95)	(121)	(83)	(95)	(121)
Nominal Embedment h_{nom}		in.	4	4-1/2	5-1/2	4	4-1/2	5-1/2	4	4-1/2	5-1/2	4	4-1/2	5-1/2	4	4-1/2	5-1/2	4	4-1/2	5-1/2
		(mm)	(102)	(114)	(140)	(102)	(114)	(140)	(102)	(114)	(140)	(102)	(114)	(140)	(102)	(114)	(140)	(102)	(114)	(140)
Spacing (s) / Edge Distance (c_a) / Concrete Thickness (h) - in. (mm)	3-3/4	(95)	n/a	n/a	n/a	n/a	n/a	0.47	n/a	n/a	n/a	n/a	n/a	0.18	n/a	n/a	0.36	n/a	n/a	n/a
	4	(102)	n/a	0.68	0.64	n/a	0.44	0.48	n/a	0.56	0.56	n/a	0.24	0.20	n/a	0.44	0.40	n/a	n/a	n/a
	4-1/2	(114)	n/a	0.70	0.66	n/a	0.48	0.52	n/a	0.57	0.56	n/a	0.29	0.24	n/a	0.48	0.47	n/a	n/a	n/a
	5	(127)	0.76	0.72	0.68	0.42	0.51	0.55	0.57	0.58	0.57	0.27	0.33	0.28	0.42	0.51	0.55	n/a	n/a	n/a
	5-1/4	(133)	0.77	0.73	0.68	0.44	0.53	0.57	0.57	0.58	0.57	0.29	0.36	0.30	0.44	0.53	0.57	n/a	n/a	n/a
	5-1/2	(140)	0.78	0.74	0.69	0.46	0.55	0.59	0.58	0.59	0.58	0.31	0.39	0.32	0.46	0.55	0.59	0.55	n/a	n/a
	5-3/4	(146)	0.79	0.76	0.70	0.48	0.58	0.61	0.58	0.59	0.58	0.33	0.41	0.34	0.48	0.58	0.61	0.57	n/a	n/a
	6	(152)	0.81	0.77	0.71	0.50	0.60	0.63	0.58	0.60	0.58	0.35	0.44	0.36	0.50	0.60	0.63	0.58	0.62	n/a
	7	(178)	0.86	0.81	0.75	0.58	0.70	0.70	0.60	0.61	0.60	0.45	0.55	0.46	0.58	0.70	0.70	0.62	0.67	n/a
	7-1/2	(191)	0.88	0.83	0.76	0.63	0.75	0.75	0.60	0.62	0.61	0.49	0.61	0.51	0.63	0.75	0.75	0.65	0.69	n/a
	8	(203)	0.91	0.86	0.78	0.67	0.80	0.80	0.61	0.63	0.61	0.54	0.68	0.56	0.67	0.80	0.80	0.67	0.72	0.67
	9	(229)	0.96	0.90	0.82	0.75	0.90	0.90	0.63	0.64	0.63	0.65	0.81	0.67	0.75	0.90	0.90	0.71	0.76	0.71
	10	(254)	1.00	0.94	0.85	0.83	1.00	1.00	0.64	0.66	0.64	0.76	0.94	0.78	0.83	1.00	1.00	0.75	0.80	0.75
	11	(279)	1.00	0.99	0.89	0.92			0.65	0.68	0.66	0.88	1.00	0.90	0.92			0.78	0.84	0.79
	12	(305)		1.00	0.92	1.00			0.67	0.69	0.67	1.00		1.00	1.00			0.82	0.88	0.82
	16	(406)			1.00				0.72	0.76	0.73							0.94	1.00	0.95
	18	(457)							0.75	0.79	0.75							1.00		1.00
	24	(610)							0.83	0.89	0.84									
	> 36	(914)							1.00	1.00	1.00									

3.3.5

Table 31 — Load adjustment factors for Stainless Steel 3/4-in. diameter KB-TZ2 in cracked concrete [1,2]

3/4-in. KB-TZ2 cracked concrete			Spacing factor in tension f_{AN}			Edge distance factor in tension f_{RN}			Spacing factor in shear [3] f_{AV}			Edge distance in shear ⊥ Toward edge f_{RV}			Edge distance in shear ∥ To edge f_{RV}			Concrete thickness factor in shear [4] f_{HV}		
Effective Embedment h_{ef}		in.	3-1/4	3-3/4	4-3/4	3-1/4	3-3/4	4-3/4	3-1/4	3-3/4	4-3/4	3-1/4	3-3/4	4-3/4	3-1/4	3-3/4	4-3/4	3-1/4	3-3/4	4-3/4
		(mm)	(83)	(95)	(121)	(83)	(95)	(121)	(83)	(95)	(121)	(83)	(95)	(121)	(83)	(95)	(121)	(83)	(95)	(121)
Nominal Embedment h_{nom}		in.	4	4-1/2	5-1/2	4	4-1/2	5-1/2	4	4-1/2	5-1/2	4	4-1/2	5-1/2	4	4-1/2	5-1/2	4	4-1/2	5-1/2
		(mm)	(102)	(114)	(140)	(102)	(114)	(140)	(102)	(114)	(140)	(102)	(114)	(140)	(102)	(114)	(140)	(102)	(114)	(140)
Spacing (s) / Edge Distance (c_a) / Concrete Thickness (h) - in. (mm)	3-3/4	(95)	n/a	n/a	n/a	n/a	n/a	0.65	n/a	n/a	n/a	n/a	n/a	0.15	n/a	n/a	0.29	n/a	n/a	n/a
	4	(102)	n/a	0.68	0.64	n/a	0.78	0.68	n/a	0.56	0.55	n/a	0.22	0.16	n/a	0.44	0.32	n/a	n/a	n/a
	4-1/2	(114)	n/a	0.70	0.66	n/a	0.85	0.73	n/a	0.57	0.56	n/a	0.26	0.19	n/a	0.52	0.39	n/a	n/a	n/a
	5	(127)	0.76	0.72	0.68	1.00	0.91	0.77	0.59	0.58	0.56	0.37	0.31	0.23	0.74	0.61	0.45	n/a	n/a	n/a
	5-1/4	(133)	0.77	0.73	0.68	1.00	0.95	0.80	0.59	0.58	0.56	0.40	0.33	0.24	0.79	0.66	0.49	n/a	n/a	n/a
	5-1/2	(140)	0.78	0.74	0.69	1.00	0.98	0.83	0.59	0.58	0.57	0.43	0.35	0.26	0.85	0.71	0.52	0.61	n/a	n/a
	5-3/4	(146)	0.79	0.76	0.70	1.00	1.00	0.85	0.60	0.59	0.57	0.46	0.38	0.28	0.91	0.76	0.56	0.63	n/a	n/a
	6	(152)	0.81	0.77	0.71	1.00	1.00	0.88	0.60	0.59	0.57	0.49	0.40	0.30	0.97	0.81	0.59	0.64	0.60	n/a
	7	(178)	0.86	0.81	0.75	1.00		0.99	0.62	0.61	0.59	0.61	0.51	0.37	1.00	1.00	0.75	0.69	0.65	n/a
	7-1/2	(191)	0.88	0.83	0.76	1.00		1.00	0.63	0.61	0.59	0.68	0.56	0.41	1.00		0.83	0.72	0.67	n/a
	8	(203)	0.91	0.86	0.78	1.00			0.64	0.62	0.60	0.75	0.62	0.46	1.00		0.91	0.74	0.70	0.63
	9	(229)	0.96	0.90	0.82				0.65	0.64	0.61	0.89	0.74	0.54			1.00	0.79	0.74	0.67
	10	(254)	1.00	0.94	0.85				0.67	0.65	0.62	1.00	0.87	0.64				0.83	0.78	0.70
	11	(279)	1.00	0.99	0.89				0.69	0.67	0.64		1.00	0.74				0.87	0.82	0.74
	12	(305)		1.00	0.92				0.71	0.68	0.65			0.84				0.91	0.85	0.77
	16	(406)			1.00				0.77	0.74	0.70			1.00				1.00	0.98	0.89
	18	(457)							0.81	0.77	0.72								1.00	0.94
	24	(610)							0.91	0.86	0.80									1.00
	> 36	(914)							1.00	1.00	0.94									

1 Linear interpolation not permitted
2 When combining multiple load adjustment factors (e.g. for a 4 anchor pattern in a corner with thin concrete member) the design can become very conservative. To optimize the design, use Hilti PROFIS Engineering Design software or perform anchor calculation using design equations from ACI 318 Ch. 17 or CSA A23.3 Annex D.
3 Spacing factor reduction in shear, f_{AV}, is applicable when edge distance $c < 3h_{ef}$. If $c \geq 3h_{ef}$ then $f_{AV} = f_{AN}$.
4 Concrete thickness reduction factor in shear, f_{HV}, is applicable when edge distance $c < 3h_{ef}$. If $c \geq 3h_{ef}$ then $f_{HV} = 1.0$.

If a reduction factor value is in a shaded cell, this indicates that this specific edge distance may not be permitted with a certain spacing (or vice versa). Check with Figure 3 and Table 21 to calculate permissible edge distance, spacing and concrete thickness combinations.

Table 32 — Load adjustment factors for Stainless Steel 1-in. diameter KB-TZ2 in uncracked concrete [1,4]

1-in. KB-TZ2 uncracked concrete		Spacing factor in tension f_{AN}		Edge distance factor in tension f_{RN}		Spacing factor in shear [3] f_{AV}		Edge distance in shear ⊥ Toward edge f_{RV}		Edge distance in shear ∥ To edge f_{RV}		Concrete thickness factor in shear [4] f_{HV}	
Effective Embedment h_{ef}	in.	4.00	5.75	4.00	5.75	4.00	5.75	4.00	5.75	4.00	5.75	4.00	5.75
	(mm)	(102)	(146)	(102)	(146)	(102)	(146)	(102)	(146)	(102)	(146)	(102)	(146)
Nominal Embedment h_{nom}	in.	4-5/8	6-3/8	4-5/8	6-3/8	4-5/8	6-3/8	4-5/8	6-3/8	4-5/8	6-3/8	4-5/8	6-3/8
	(mm)	(117)	(162)	(117)	(162)	(117)	(162)	(117)	(162)	(117)	(162)	(117)	(162)
Spacing (s) / Edge Distance (c_a) / Concrete Thickness (h) - in. (mm)													
3	(76)	n/a	n/a	n/a	0.302	n/a	n/a	n/a	0.085	n/a	0.170	n/a	n/a
3-3/4	(95)	n/a	n/a	0.393	0.332	n/a	n/a	0.199	0.119	0.393	0.238	n/a	n/a
4	(102)	n/a	n/a	0.409	0.342	n/a	n/a	0.219	0.131	0.409	0.262	n/a	n/a
4-1/4	(108)	n/a	n/a	0.425	0.352	n/a	n/a	0.240	0.144	0.425	0.287	n/a	n/a
4-3/4	(121)	n/a	0.638	0.458	0.373	n/a	0.551	0.284	0.170	0.458	0.339	n/a	n/a
5	(127)	0.708	0.645	0.475	0.384	0.576	0.554	0.306	0.183	0.475	0.366	n/a	n/a
6	(152)	0.750	0.674	0.545	0.429	0.591	0.565	0.403	0.241	0.545	0.429	n/a	n/a
6-3/4	(171)	0.781	0.696	0.614	0.464	0.602	0.573	0.481	0.287	0.614	0.464	n/a	n/a
8	(203)	0.833	0.732	0.727	0.525	0.621	0.586	0.620	0.371	0.727	0.525	0.696	n/a
10	(254)	0.917	0.790	0.909	0.645	0.652	0.608	0.867	0.518	0.909	0.645	0.778	0.656
12	(305)	1.000	0.848	1.000	0.774	0.682	0.629	1.000	0.681	1.000	0.774	0.853	0.718
18	(457)		1.000		1.000	0.773	0.694		1.000		1.000	1.000	0.880
24	(610)					0.864	0.758						1.000
36	(914)					1.000	0.887						
> 48	(1219)						1.000						

Table 33 — Load adjustment factors for Stainless Steel 1-in. diameter KB-TZ2 in cracked concrete [1,4]

1-in. KB-TZ2 cracked concrete		Spacing factor in tension f_{AN}		Edge distance factor in tension f_{RN}		Spacing factor in shear [3] f_{AV}		Edge distance in shear ⊥ Toward edge f_{RV}		Edge distance in shear ∥ To edge f_{RV}		Concrete thickness factor in shear [4] f_{HV}	
Effective Embedment h_{ef}	in.	4.00	5.75	4.00	5.75	4.00	5.75	4.00	5.75	4.00	5.75	4.00	5.75
	(mm)	(102)	(146)	(102)	(146)	(102)	(146)	(102)	(146)	(102)	(146)	(102)	(146)
Nominal Embedment h_{nom}	in.	4-5/8	6-3/8	4-5/8	6-3/8	4-5/8	6-3/8	4-5/8	6-3/8	4-5/8	6-3/8	4-5/8	6-3/8
	(mm)	(117)	(162)	(117)	(162)	(117)	(162)	(117)	(162)	(117)	(162)	(117)	(162)
Spacing (s) / Edge Distance (c_a) / Concrete Thickness (h) - in. (mm)													
3	(76)	n/a	n/a	n/a	0.542	n/a	n/a	n/a	0.081	n/a	0.162	n/a	n/a
3-3/4	(95)	n/a	n/a	0.721	0.596	n/a	n/a	0.170	0.113	0.340	0.226	n/a	n/a
4	(102)	n/a	n/a	0.750	0.614	n/a	n/a	0.188	0.124	0.375	0.249	n/a	n/a
4-1/4	(108)	n/a	n/a	0.779	0.633	n/a	n/a	0.205	0.136	0.411	0.272	n/a	n/a
4-3/4	(121)	n/a	0.638	0.840	0.671	n/a	0.549	0.243	0.161	0.485	0.322	n/a	n/a
5	(127)	0.708	0.645	0.871	0.690	0.568	0.552	0.262	0.174	0.524	0.348	n/a	n/a
6	(152)	0.750	0.674	1.000	0.770	0.582	0.562	0.344	0.228	0.689	0.457	n/a	n/a
6-3/4	(171)	0.781	0.696		0.833	0.592	0.570	0.411	0.273	0.822	0.545	n/a	n/a
8	(203)	0.833	0.732		0.943	0.609	0.583	0.530	0.352	1.000	0.703	0.661	n/a
10	(254)	0.917	0.790		1.000	0.636	0.604	0.741	0.491		0.983	0.739	0.644
12	(305)	1.000	0.848			0.664	0.625	0.974	0.646		1.000	0.809	0.706
18	(457)		1.000			0.746	0.687	1.000	1.000			0.991	0.864
24	(610)					0.828	0.749					1.000	0.998
36	(914)					0.991	0.874						1.000
> 48	(1219)					1.000	0.998						

1 Linear interpolation not permitted
2 When combining multiple load adjustment factors (e.g. for a 4 anchor pattern in a corner with thin concrete member) the design can become very conservative. To optimize the design, use Hilti PROFIS Engineering Design software or perform anchor calculation using design equations from ACI 318 Ch. 17 or CSA A23.3 Annex D.
3 Spacing factor reduction in shear, f_{AV}, is applicable when edge distance $c < 3h_{ef}$. If $c \geq 3h_{ef}$ then $f_{AV} = f_{AN}$.
4 Concrete thickness reduction factor in shear, f_{HV}, is applicable when edge distance $c < 3h_{ef}$. If $c \geq 3h_{ef}$ then $f_{HV} = 1.0$.

If a reduction factor value is in a shaded cell, this indicates that this specific edge distance may not be permitted with a certain spacing (or vice versa). Check with Figure 3 and Table 21 to calculate permissible edge distance, spacing and concrete thickness combinations.

Table 34 — Hilti Carbon Steel KB-TZ2 in the soffit of uncracked lightweight concrete over metal deck, applicable for both hammer and core drilled installations [1,2,3,4,5,6]

Nominal anchor diameter in.	Effective embedment in. (mm)	Nominal embedment in. (mm)	Installation per Figure 4				Installation per Figure 5			
			Min. conc. thickness [8] in. (mm)	Tension - ΦN_n		Shear - ΦV_n	Min. conc. thickness [8] in. (mm)	Tension - ΦN_n		Shear - ΦV_n
				f'_c = 3,000 psi (20.7 MPa) lb (kN)	f'_c = 4,000 psi (27.6 MPa) lb (kN)	f'_c = 3,000 psi (20.7 MPa) lb (kN)		f'_c = 3,000 psi (20.7 MPa) lb (kN)	f'_c = 4,000 psi (27.6 MPa) lb (kN)	f'_c = 3,000 psi (20.7 MPa) lb (kN)
1/4	1-1/2 (38)	1-3/4 (44)	2-1/2 (64)	775 (3.4)	820 (3.6)	1,060 (4.7)	2-1/4 (57)	620 (2.8)	655 (2.9)	730 (3.2)
3/8	1-1/2 (38)	1-7/8 (48)	2-1/2 (64)	1,205 (5.4)	1,285 (5.7)	880 (3.9)	2-1/4 (57)	645 (2.9)	685 (3.0)	1,540 (6.9)
	2 (51)	2-1/2 (64)	2-1/2 (64)	1,705 (7.6)	1,830 (8.1)	1,380 (6.1)	2-1/4 (57)	1,615 (7.2)	1,730 (7.7)	1,630 (7.3)
	2-1/2 (64)	3 (76)	2-1/2 (64)	1,945 (8.7)	2,155 (9.6)	1,380 (6.1)	N/A	N/A	N/A	N/A
1/2	1-1/2 (38)	2 (51)	2-1/2 (64)	1,205 (5.4)	1,390 (6.2)	1,165 (5.2)	2-1/4 (57)	1,180 (5.2)	1,365 (6.1)	1,740 (7.7)
	2 (51)	2-1/2 (64)	2-1/2 (64)	1,790 (8.0)	2,015 (9.0)	1,470 (6.5)	2-1/4 (57)	1,235 (5.5)	1,395 (6.2)	2,065 (9.2)
	2-1/2 (64)	3 (76)	2-1/2 (64)	2,435 (10.8)	2,645 (11.8)	2,135 (9.5)	N/A	N/A	N/A	N/A
	3-1/4 (83)	3-3/4 (95)	2-1/2 (64)	3,065 (13.6)	3,390 (15.1)	2,755 (12.3)	3-1/4 (83)	1,730 (7.7)	1,915 (8.5)	2,250 (10.0)
5/8	2-3/4 (70)	3-1/4 (83)	2-1/2 (64)	2,870 (12.8)	3,315 (14.7)	2,480 (11.0)	3-1/4 (83)	1,925 (8.6)	2,225 (9.9)	2,655 (11.8)
	4 (102)	4-1/2 (114)	2-1/2 (64)	3,780 (16.8)	4,365 (19.4)	3,025 (13.5)	N/A	N/A	N/A	N/A
3/4	3-1/4 (83)	4 (102)	2-1/2 (64)	2,470 (11.0)	2,730 (12.1)	2,655 (11.8)	N/A	N/A	N/A	N/A
	3-3/4[9] (95)	4-1/2 (114)	3-1/4 (83)	3,115 (13.9)	3,405 (15.1)	5,110 (22.7)	N/A	N/A	N/A	N/A

Table 35 — Hilti Carbon Steel KB-TZ2 in the soffit of cracked lightweight concrete over metal deck, applicable for both hammer and core drilled installations [1,2,3,4,5,6,7]

Nominal anchor diameter in.	Effective embedment in. (mm)	Nominal embedment in. (mm)	Installation per Figure 4				Installation per Figure 5			
			Min. conc. thickness [8] in. (mm)	Tension - ΦN_n		Shear - ΦV_n	Min. conc. thickness [8] in. (mm)	Tension - ΦN_n		Shear - ΦV_n
				f'_c = 3,000 psi (20.7 MPa) lb (kN)	f'_c = 4,000 psi (27.6 MPa) lb (kN)	f'_c = 3,000 psi (20.7 MPa) lb (kN)		f'_c = 3,000 psi (20.7 MPa) lb (kN)	f'_c = 4,000 psi (27.6 MPa) lb (kN)	f'_c = 3,000 psi (20.7 MPa) lb (kN)
1/4	1-1/2 (38)	1-3/4 (44)	2-1/2 (64)	230 (1.0)	260 (1.2)	1,060 (4.7)	2-1/4 (57)	185 (0.8)	205 (0.9)	730 (3.2)
3/8	1-1/2 (38)	1-7/8 (48)	2-1/2 (64)	1,055 (4.7)	1,220 (5.4)	880 (3.9)	2-1/4 (57)	565 (2.5)	650 (2.9)	1,540 (6.9)
	2 (51)	2-1/2 (64)	2-1/2 (64)	1,490 (6.6)	1.705 (7.6)	1,380 (6.1)	2-1/4 (57)	1,385 (6.2)	1,580 (7.0)	1,630 (7.3)
	2-1/2 (64)	3 (76)	2-1/2 (64)	1,565 (7.0)	1.695 (7.5)	1,380 (6.1)	N/A	N/A	N/A	N/A
1/2	1-1/2 (38)	2 (51)	2-1/2 (64)	1,075 (4.8)	1.230 (5.5)	1,165 (5.2)	2-1/4 (57)	960 (4.3)	1,100 (4.9)	1,740 (7.7)
	2 (51)	2-1/2 (64)	2-1/2 (64)	1,390 (6.2)	1.600 (7.1)	1,470 (6.5)	2-1/4 (57)	960 (4.3)	1,110 (4.9)	2,065 (9.2)
	2-1/2 (64)	3 (76)	2-1/2 (64)	2,130 (9.5)	2,435 (10.9)	2,135 (9.5)	N/A	N/A	N/A	N/A
	3-1/4 (83)	3-3/4 (95)	2-1/2 (64)	2,170 (9.7)	2,435 (10.8)	2,755 (12.3)	3-1/4 (83)	1,230 (5.5)	1,380 (6.1)	2,250 (10.0)
5/8	2-3/4 (70)	3-1/4 (83)	2-1/2 (64)	2,555 (11.4)	2,950 (13.1)	2,480 (11.0)	3-1/4 (83)	1,715 (7.6)	1,980 (8.8)	2,655 (11.8)
	4 (102)	4-1/2 (114)	2-1/2 (64)	2,855 (12.7)	3,300 (14.7)	3,025 (13.5)	N/A	N/A	N/A	N/A
3/4	3-1/4 (83)	4 (102)	2-1/2 (64)	2,160 (9.6)	2,395 (10.7)	2,655 (11.8)	N/A	N/A	N/A	N/A
	3-3/4 (95)	4-1/2 (114)	3-1/4 (83)	2,425 (10.8)	2,735 (12.2)	5,110 (22.7)	N/A	N/A	N/A	N/A

1 See Section 3.1.8 to convert design strength value to ASD value.
2 Linear interpolation between embedment depths and concrete compressive strengths is not permitted.
3 Tabular value is for one anchor per flute. Minimum spacing along the length of the flute is 3 x h_{ef} (effective embedment).
4 Tabular values are lightweight concrete and no additional reduction factor is needed.
5 No additional reduction factors for spacing or edge distance need to be applied.
6 Comparison of the tabular values to the steel strength is not necessary. Tabular values control.
7 Tabular values are for static loads only. Seismic design is not permitted for uncracked concrete. For seismic tension loads, multiply cracked concrete tabular values in tension only by $\alpha_{N,seis}$ = 0.75, except for 3/4 x 4-3/4 h_{ef} where $\alpha_{N,seis}$ = 0.73. See Section 3.1.8 for additional information on seismic applications.
8 Minimum concrete thickness over the upper flute when anchor is installed in the lower flute. See Figure 4 and 5.
9 For core drilled installations of 3/4" anchors installed at 3-3/4" effective embedment, apply a reduction factor of 0.89 to the design tension strength of anchors installed in uncracked concrete.

Figure 4 — Installation of Hilti KB-TZ2 carbon steel in the soffit of concrete over metal deck floor and roof assemblies – W deck[2]

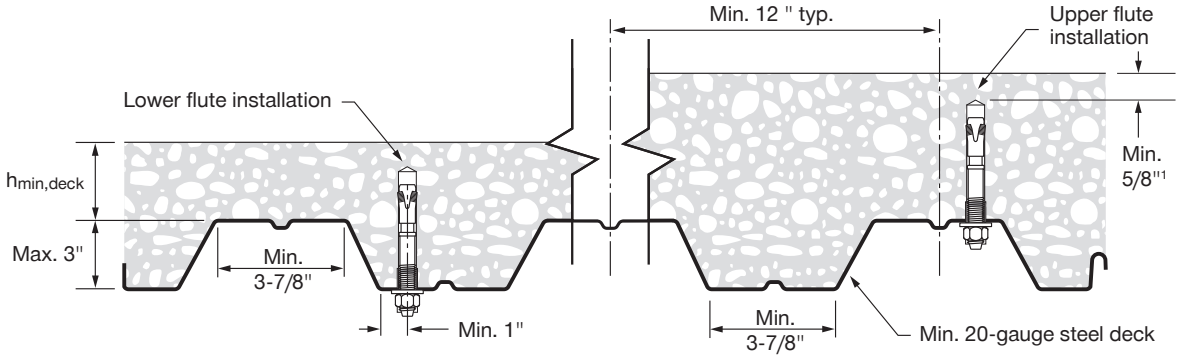

Figure 5 — Installation of Hilti KB-TZ2 carbon steel in the soffit of concrete over metal deck floor and roof assemblies – B deck

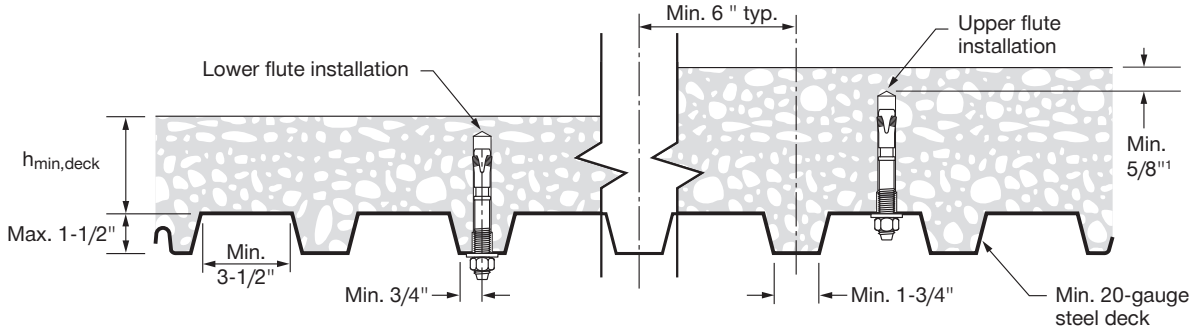

1 5/8" clearance between the bottom of the drilled hole and the concrete surface is only applicable for upper flute installations. Refer to Tables 34 and 35 for minimum concrete thicknesses for installations into the lower flute.
2 For flute widths greater or equal to 4-1/2", the shear strength may be increased. Refer to ESR-4266 for more information.

Table 36 — Hilti KB-TZ2 carbon steel anchors setting information for installation on the top of concrete-filled profile steel deck asseblies according to figure 6 [1,2,3]

Design information	Symbol	Units	Nominal anchor diameter (in)			
			1/4	3/8		1/2
Effective minimum embedment	h_{ef}	in.	1-1/2	1-1/2	2	2
Nominal minimum embedment	h_{nom}	in.	1-3/4	1-7/8	2-1/2	2-1/2
Minimum hole depth	h_0	in.	2	2	2-1/2	2-3/4
Minimum concrete thickness [4]	$h_{min,deck}$	in.	2-1/2	2-1/2	2-1/2	3-2/4
Critical edge distance	$c_{ac,deck,top}$	in.	5	8	4-1/2	6
Minimum edge distance	$c_{min,deck,top}$	in.	3	16		7-1/2
Minimum spacing	$s_{min,deck,top}$	in.	3	8		9
Required installation torque	T_{inst}	ft-lb	4	30		50

1 Installation must comply with Figure 6 of this report.
2 Design capacity shall be based on calculations according to values in Tables 2 and 3 of this report.
3 Applicable for $h_{min,deck}$ < 4-in. For $h_{min,deck}$ ≥ 4-in, use setting information in Tables 1 and 5 of this section.
4 Minimun concrete thickness refers to concrete thickness above the upper flute. See Figure 6.

Figure 6 — KB-TZ2 Installation in the top of concrete filled profile steel deck assemblies

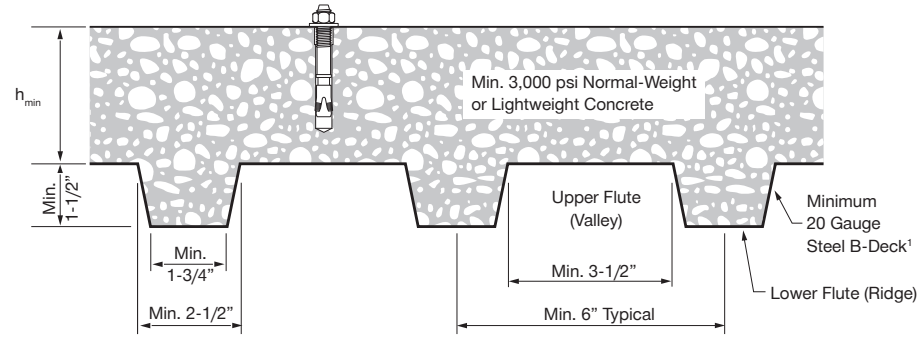

1 1-1/2-in B-deck as a minimum profile size. Other deck profiles meeting the B-deck minimum dimensions are also permitted

DESIGN DATA IN CONCRETE PER CSA A23.3

CSA A23.3 Annex D Design

Limit State Design of anchors is described in the provisions of CSA A23.3 Annex D for post-installed anchors tested and assessed in accordance with ACI 355.2 for mechanical anchors and ACI 355.4 for adhesive anchors. Tables 37, 38, 42 and 43 in this section contains the Limit State Design tables that are based on the published loads in ICC-ES Evaluation Report ESR 4266 and converted for use with CSA A23.3 Annex D. Tables 40, 41, 45 and 46 are Hilti Simplified Design Tables which are pre-factored resistance tables based on the design parameters and variables in Tables 37, 38, 42 and 43. All the figures in the previous ACI 318 Chapter 17 design section are applicable to Limit State Design and the tables will reference these figures.

For a detailed explanation of the tables developed in accordance with CSA A23.3 Annex D, refer to Section 3.1.8. Technical assistance is available by contacting Hilti Canada at (800) 363 4458 or at www.hilti.ca.

Table 37 — Hilti KB-TZ2 carbon steel tension design information in accordance with CSA A23.3 Annex D, applicable for both hammer and core drilled installations[1]

Design parameter	Symbol	Units	Nominal anchor diameter (in.)																Ref
			1/4	3/8			1/2				5/8			3/4			1		A23.3
Effective min. embedment [2]	h_{ef}	in. (mm)	1-1/2 (38)	1-1/2 (38)	2 (51)	2-1/2 (64)	1-1/2 (38)	2 (51)	2-1/2 (64)	3-1/4 (83)	2-3/4 (70)	3-1/4 (83)	4 (102)	3-1/4 (83)	3-3/4 (95)	4-3/4 (121)	4 (102)	5-3/4 (146)	
Min. concrete thickness	h_{min}	in. (mm)	See Table 5																
Minimum edge distance	c_{min}	in. (mm)	See Table 5																
Minimum anchor spacing	s_{min}	in. (mm)	See Table 5																
Tension, steel failure modes																			
Steel embed. material resistance factor for reinforcement	Φ_s	-	0.85	0.85			0.85				0.85			0.85			0.85		8.4.3
Resistance modification factor for tension, steel failure modes[3]	R	-	0.80	0.80			0.80				0.80			0.80			0.80		D.5.3
Min. specified yield strength	f_{ya}	psi (N/mm²)	100,900 (696)	100,900 (696)			96,300 (664)				87,000 (600)			84,700 (584)			75,000 (517)		
Min. specified ult. strength	f_{ut}	psi (N/mm²)	122,400 (844)	126,200 (870)			114,000 (786)				106,700 (736)			105,900 (730)			88,000 (607)		
Effective tensile stress area	$A_{se,N}$	in² (mm²)	0.024 (15.4)	0.051 (33.2)			0.099 (63.6)				0.164 (106.0)			0.239 (154.4)			0.470 (303.2)		
Factored steel resistance in tension	N_{sar}	lb (kN)	1,985 (8.8)	4,420 (19.7)			7,645 (34.0)				11,925 (53.0)			17,230 (76.6)			28,145 (125.2)		D.6.1.2
Tension, concrete failure modes																			
Anchor category	-	-	3	1			1				1			1			1		D.5.3 (c)
Concrete material resistance factor	Φ_c	-	0.65	0.65			0.65				0.65			0.65			0.65		8.4.2
Resistance modification factor for tension and shear, concrete failure modes, Condition B [5]	R	-	0.75	1.00			1.00				1.00			1.00			1.00		D.5.3 (c)
Coeff. for factored conc. breakout resistance, uncracked concrete	$k_{c,uncr}$	-	10.0	10.0	10.0	10.0	11.3	11.3	10.0	10.0	10.0	10.0	10.0	11.3	11.3[7]	10.0	11.3	10.0	D.6.2.2
Coeff. for factored conc. breakout resistance, cracked concrete	$k_{c,cr}$	-	7.1	8.8	8.8	7.1	10.0	8.8	8.8	7.1	8.8	8.8	7.1	8.8	8.8	8.8	8.8	8.8	D.6.2.2
Modification factor for anchor resistance, tension, uncracked conc. [4]	$\Psi_{c,N}$	-	1.0	1.0			1.0				1.0			1.0			1.0		
Critical edge distance	c_{ac}	in. (mm)	4 (102)	5 (127)	4-3/8 (111)	5-1/2 (140)	8 (203)	5-1/2 (140)	6-3/4 (171)	10 (254)	10 (254)	11-1/2 (292)	8-3/4 (222)	12 (305)	10 (254)	9 (229)	11 (279)	16 (406)	
Factored pullout resistance in 20 MPa uncracked concrete [6]	$N_{pr,uncr}$	lb (kN)	1,055 (4.7)	N/A	N/A	2,865 (12.7)	N/A	N/A	N/A	N/A	3,770 (16.8)	N/A	6,300 (28.0	N/A	N/A	N/A	N/A	N/A	D.6.3.2
Factored pullout resistance in 20 MPa cracked concrete [6]	$N_{pr,cr}$	lb (kN)	325 (1.4)	N/A	N/A	N/A	N/A	N/A	N/A	N/A	N/A	N/A	N/A	N/A	N/A	6,000 (26.7)	N/A	8,275 (36.8)	D.6.3.2
Factored pullout resistance in 20 MPa cracked concrete, seismic [6]	$N_{pr,eq}$	lb (kN)	325 (1.4)	N/A	N/A	N/A	N/A	N/A	N/A	N/A	N/A	N/A	N/A	N/A	N/A	5,880 (26.1)	N/A	8,275 (36.8)	D.6.3.2
Normalization factor, uncracked concrete	n_{uncr}	-	0.20	0.22	0.24	0.35	0.50	0.42	0.29	0.35	0.50	0.48	0.50	0.35	0.31	0.39	N/A	0.38	
Normalization factor, cracked concrete, seismic	n_{cr}	-	0.39	0.50	0.46	0.28	0.47	0.50	0.48	0.40	0.50	0.47	0.50	0.36	0.42	0.29	N/A	0.50	

1 Design information in this table is taken from ICC-ES ESR-4266, dated December, 2020, and revised July, 2021 Tables 4 and 6, and converted for use with CSA A23.3 Annex D.
2 See Figure 1 of this document.
3 The KB-TZ2 carbon steel anchor is considered a ductile steel element as defined by CSA A23.3 Annex D section D.2.
4 For all design cases, $\Psi_{c,N}$ = 1.0. The appropriate coefficient for breakout resistance for cracked concrete ($k_{c,cr}$) or uncracked concrete ($k_{c,uncr}$) must be used.
5 For use with the load combinations of CSA A23.3 chapter 8. Condition B applies where supplementary reinforcement in conformance with CSA A23.3 section D.5.3 is not provided, or where pullout or pryout strength governs. For cases where the presence of supplementary reinforcement can be verified, the resistance modification factors associated with Condition A may be used.
6 For all design cases, $\Psi_{c,P}$ = 1.0. Tabular value for pullout strength is for a concrete compressive strength of 2,900 psi (20.0 M Pa). Pullout strength for concrete compressive strength greater than 2,900 psi (20.2 MPa) may be increased by multiplying the tabular pullout strength by $(f'_c / 2{,}900)^n$ for psi, or $(f'_c / 20.2)^n$ for MPa,
7 For core drilled installation $k_{c,uncr}$ = 10.0 for 3/4" diameter installed at 3-3/4" effective embedment.

Table 38 — Hilti KB-TZ2 carbon steel shear design information in accordance with CSA A23.3 Annex D, applicable for both hammer and core drilled installations [1]

Design parameter	Symbol	Units	Nominal anchor diameter (in.)																Ref
			1/4	3/8			1/2				5/8			3/4			1		A23.3
Anchor O.D.	d_a	in.	0.25	0.375			0.5				0.625			0.75			1.00		
		(mm)	(6.4)	(9.5)			(12.7)				(15.9)			(19.1)			(25.4)		
Effective min. embedment [2]	h_{ef}	in.	1-1/2	1-1/2	2	2-1/2	1-1/2	2	2-1/2	3-1/4	2-3/4	3-1/4	4	3-1/4	3-3/4	4-3/4	4	5-3/4	
		(mm)	(38)	(38)	(51)	(64)	(38)	(51)	(64)	(83)	(70)	(83)	(102)	(83)	(95)	(121)	(102)	(146)	
Shear, steel failure modes																			
Steel embed. material resistance factor for reinforcement	Φ_s	-	0.85	0.85			0.85				0.85			0.85			0.85		8.4.3
Resistance modification factor for shear, steel failure modes [3]	R	-	0.75	0.75			0.75				0.75			0.75			0.75		D.5.3
Factored steel resistance in shear	V_{sar}	lb	855	2,055			3,530				6,540			8,800			11,980	14,550	D.7.1.2
		(kN)	(3.8)	(9.1)			(15.7)				(29.1)			(39.1)			(53.3)	(64.7)	
Factored steel resistance in shear, seismic	$V_{sar,eq}$	lb	855	2,055			3,530				6,540			8,800			8,800		
		(kN)	(3.8)	(9.1)			(15.7)				(29.1)			(39.1)			(39.1)		
Shear, concrete failure modes																			
Concrete material resistance factor	Φ_c	-	0.65	0.65			0.65				0.65			0.65			0.65		8.4.2
Resistance modification factor for shear, concrete failure modes [4]	R	-	1.00	1.00			1.00				1.00			1.00			1.00		D.5.3
Load bearing length of anchor in shear	ℓ_e	in.	1-1/2	1-1/2	2	2-1/2	1-1/2	2	2-1/2	3-1/4	2-3/4	3-1/4	4	3-1/4	3-3/4	4-3/4	4	5-3/4	
		(mm)	(38)	(38)	(51)	(64)	(38)	(51)	(64)	(83)	(70)	(83)	(102)	(83)	(95)	(121)	(102)	(146)	
Effectiveness factor for pryout	k_{cp}	-	1.0	1.0	1.0	2.0	1.0	1.0	2.0	2.0	2.0	2.0	2.0	2.0	2.0	2.0	2.0	2.0	

1 Design information in this table is taken from ICC-ES ESR-4266, dated December, 2020, and revised July, 2021 Tables 4 and 6, and converted for use with CSA A23.3 Annex D.
2 See Figure 1 of this document.
3 The KB-TZ2 carbon steel anchor is considered a ductile steel element as defined by CSA A23.3 Annex D section D.2.
4 For use with the load combinations of CSA A23.3 chapter 8. Condition B applies where supplementary reinforcement in conformance with CSA A23.3 section D.5.3 is not provided, or where pullout or pryout strength governs. For cases where the presence of supplementary reinforcement can be verified, the resistance modification factors associated with Condition A may be used.

Table 39 — Steel resistance for Hilti KB-TZ2 carbon steel anchors [1,2]

Nominal anchor diameter in.	Effective embedment depth in. (mm)			Tensile [3] ΦN_{sar} lb (kN)	Shear [4] ΦV_{sar} lb (kN)	Seismic Shear [5] $\Phi V_{sar,eq}$ lb (kN)
1/4	1-1/2 (38)			1,985 (8.8)	855 (3.8)	855 (3.8)
3/8	1-1/2 (38)			4,420 (19.7)	2,055 (9.1)	2,055 (9.1)
3/8	2 (51)	2-1/2 (64)		4,420 (19.7)	2,160 (9.6)	2,160 (9.6)
1/2	1-1/2 (38)	2 (51)		7,645 (34.0)	3,530 (15.7)	3,530 (15.7)
1/2	2-1/2 (64)	3-1/4 (83)		7,645 (34.0)	4,385 (19.5)	4,385 (19.5)
5/8	2-3/4 (70)	3-1/4 (83)	4 (102)	11,925 (53.0)	6,540 (29.1)	6,540 (29.1)
3/4	3-1/4 (83)	3-3/4 (95)	4-3/4 (121)	17,230 (76.6)	8,800 (39.1)	8,800 (39.1)
1	4 (102)			28,145 (125.2)	11,980 (53.3)	8,800 (39.1)
1	5-3/4 (146)			28,145 (125.2)	14,550 (64.7)	8,800 (39.1)

1 See Section 3.1.8 to convert factored resistance value to ASD value.
2 Hilti KB-TZ2 carbon steel anchors are to be considered ductile steel elements.
3 Tensile $N_{sar} = A_{se,N}\ \Phi_s\ f_{uta}$ R as noted in CSA A23.3 Annex D.
4 Shear determined by static shear tests with $V_{sar} < 0.6\ A_{se,V}\ \Phi_s\ f_{ut}$a R as noted in CSA A23.3 Annex D.
5 Seismic shear values determined by seismic shear tests with $V_{sar,eq} \leq 0.60\ A_{se,V}\ \Phi_s\ f_{uta}$ R as noted in CSA A23.3 Annex D.
See Section 3.1.8 for additional information on seismic applications.

Table 40 — Hilti KB-TZ2 carbon steel factored resistance based on concrete failure modes in uncracked concrete, applicable for both hammer and core drilled installations [1,2,3,4]

Nominal anchor diameter in.	Effective embedment in. (mm)	Nominal embedment in. (mm)	Tension - N_r				Shear - V_r			
			f'_c = 20 MPa (2,900 psi) lb (kN)	f'_c = 25 MPa (3,625 psi) lb (kN)	f'_c = 30 MPa (4,350 psi) lb (kN)	f'_c = 40 MPa (5,800 psi) lb (kN)	f'_c = 20 MPa (2,900 psi) lb (kN)	f'_c = 25 MPa (3,625 psi) lb (kN)	f'_c = 30 MPa (4,350 psi) lb (kN)	f'_c = 40 MPa (5,800 psi) lb (kN)
1/4	1 1/2 (38)	1 3/4 (44)	1,055 (4.7)	1,105 (4.9)	1,145 (5.1)	1,210 (5.4)	1,535 (6.8)	1,720 (7.6)	1,880 (8.4)	2,175 (9.7)
3/8	1 1/2 (38)	1 7/8 (48)	1,535 (6.8)	1,720 (7.6)	1,880 (8.4)	2,175 (9.7)	1,535 (6.8)	1,720 (7.6)	1,880 (8.4)	2,175 (9.7)
	2 (51)	2 1/2 (64)	2,365 (10.5)	2,645 (11.8)	2,900 (12.9)	3,345 (14.9)	2,365 (10.5)	2,645 (11.8)	2,900 (12.9)	3,345 (14.9)
	2 1/2 (64)	3 (76)	2,865 (12.7)	3,095 (13.8)	3,300 (14.7)	3,650 (16.2)	3,305 (14.7)	3,695 (16.4)	4,050 (18.0)	4,675 (20.8)
1/2	1 1/2 (38)	2 (51)	1,735 (7.7)	1,940 (8.6)	2,125 (9.5)	2,455 (10.9)	1,735 (7.7)	1,940 (8.6)	2,125 (9.5)	2,455 (10.9)
	2 (51)	2 1/2 (64)	2,675 (11.9)	2,990 (13.3)	3,275 (14.6)	3,780 (16.8)	2,675 (11.9)	2,990 (13.3)	3,275 (14.6)	3,780 (16.8)
	2 1/2 (64)	3 (76)	3,305 (14.7)	3,695 (16.4)	4,050 (18.0)	4,675 (20.8)	3,305 (14.7)	3,695 (16.4)	4,050 (18.0)	4,675 (20.8)
	3 1/4 (83)	3 3/4 (95)	4,900 (21.8)	5,480 (24.4)	6,005 (26.7)	6,930 (30.8)	9,805 (43.6)	10,960 (48.8)	12,005 (53.4)	13,865 (61.7)
5/8	2 3/4 (70)	3 1/4 (83)	3,770 (16.8)	4,215 (18.7)	4,615 (20.5)	5,330 (23.7)	7,630 (33.9)	8,530 (37.9)	9,345 (41.6)	10,790 (48.0)
	3 1/4 (83)	3 3/4 (95)	4,900 (21.8)	5,480 (24.4)	6,005 (26.7)	6,930 (30.8)	9,805 (43.6)	10,960 (48.8)	12,005 (53.4)	13,865 (61.7)
	4 (102)	4 1/2 (114)	6,300 (28.0)	7,045 (31.3)	7,720 (34.3)	8,910 (39.6)	13,385 (59.5)	14,965 (66.6)	16,395 (72.9)	18,930 (84.2)
3/4	3 1/4 (83)	4 (102)	4,900 (21.8)	5,480 (24.4)	6,005 (26.7)	6,930 (30.8)	9,805 (43.6)	10,960 (48.8)	12,005 (53.4)	13,865 (61.7)
	3 3/4[6] (95)	4 1/2 (114)	6,865 (30.5)	7,675 (34.1)	8,405 (37.4)	9,710 (43.2)	13,730 (61.1)	15,350 (68.3)	16,815 (74.8)	19,415 (86.4)
	4 3/4 (121)	5 1/2 (140)	8,660 (38.5)	9,685 (43.1)	10,605 (47.2)	12,250 (54.5)	17,320 (77.0)	19,365 (86.1)	21,215 (94.4)	24,495 (109.0)
1	4 (102)	4 5/8 (117)	7,560 (33.6)	8,455 (37.6)	9,260 (41.2)	10,695 (47.6)	15,125 (67.3)	16,910 (75.2)	18,525 (82.4)	21,390 (95.1)
	5 3/4 (146)	6 3/8 (162)	11,535 (51.3)	12,895 (57.4)	14,125 (62.8)	16,310 (72.6)	23,070 (102.6)	25,790 (114.7)	28,255 (125.7)	32,625 (145.1)

Table 41 — Hilti KB-TZ2 carbon steel factored resistance based on concrete failure modes in cracked concrete, applicable for both hammer and core drilled installations [1,2,3,4,5]

Nominal anchor diameter in.	Effective embedment in. (mm)	Nominal embedment in. (mm)	Tension - N_r				Shear - V_r			
			f'_c = 20 MPa (2,900 psi) lb (kN)	f'_c = 25 MPa (3,625 psi) lb (kN)	f'_c = 30 MPa (4,350 psi) lb (kN)	f'_c = 40 MPa (5,800 psi) lb (kN)	f'_c = 20 MPa (2,900 psi) lb (kN)	f'_c = 25 MPa (3,625 psi) lb (kN)	f'_c = 30 MPa (4,350 psi) lb (kN)	f'_c = 40 MPa (5,800 psi) lb (kN)
1/4	1 1/2 (38)	1 3/4 (44)	325 (1.4)	350 (1.6)	380 (1.7)	425 (1.9)	1,090 (4.9)	1,220 (5.4)	1,335 (5.9)	1,545 (6.9)
3/8	1 1/2 (38)	1 7/8 (48)	1,350 (6.0)	1,510 (6.7)	1,655 (7.4)	1,915 (8.5)	1,350 (6.0)	1,510 (6.7)	1,655 (7.4)	1,915 (8.5)
	2 (51)	2 1/2 (64)	2,080 (9.3)	2,330 (10.4)	2,550 (11.3)	2,945 (13.1)	2,080 (9.3)	2,330 (10.4)	2,550 (11.3)	2,945 (13.1)
	2 1/2 (64)	3 (76)	2,350 (10.4)	2,625 (11.7)	2,875 (12.8)	3,320 (14.8)	2,350 (10.4)	2,625 (11.7)	2,875 (12.8)	3,320 (14.8)
1/2	1 1/2 (38)	2 (51)	1,535 (6.8)	1,720 (7.6)	1,880 (8.4)	2,175 (9.7)	1,535 (6.8)	1,720 (7.6)	1,880 (8.4)	2,175 (9.7)
	2 (51)	2 1/2 (64)	2,080 (9.3)	2,330 (10.4)	2,550 (11.3)	2,945 (13.1)	2,080 (9.3)	2,330 (10.4)	2,550 (11.3)	2,945 (13.1)
	2 1/2 (64)	3 (76)	2,910 (12.9)	3,255 (14.5)	3,565 (15.9)	4,115 (18.3)	2,910 (12.9)	3,255 (14.5)	3,565 (15.9)	4,115 (18.3)
	3 1/4 (83)	3 3/4 (95)	3,480 (15.5)	3,890 (17.3)	4,260 (19.0)	4,920 (21.9)	6,960 (31.0)	7,780 (34.6)	8,525 (37.9)	9,845 (43.8)
5/8	2 3/4 (70)	3 1/4 (83)	3,355 (14.9)	3,755 (16.7)	4,110 (18.3)	4,750 (21.1)	6,715 (29.9)	7,505 (33.4)	8,225 (36.6)	9,495 (42.2)
	3 1/4 (83)	3 3/4 (95)	4,315 (19.2)	4,820 (21.5)	5,285 (23.5)	6,100 (27.1)	8,625 (38.4)	9,645 (42.9)	10,565 (47.0)	12,200 (54.3)
	4 (102)	4 1/2 (114)	4,750 (21.1)	5,310 (23.6)	5,820 (25.9)	6,720 (29.9)	9,505 (42.3)	10,625 (47.3)	11,640 (51.8)	13,440 (59.8)
3/4	3 1/4 (83)	4 (102)	4,315 (19.2)	4,820 (21.5)	5,285 (23.5)	6,100 (27.1)	8,625 (38.4)	9,645 (42.9)	10,565 (47.0)	12,200 (54.3)
	3 3/4 (95)	4 1/2 (114)	5,345 (23.8)	5,975 (26.6)	6,545 (29.1)	7,335 (33.6)	10,690 (47.6)	11,955 (53.2)	13,095 (58.2)	15,120 (67.3)
	4 3/4 (121)	5 1/2 (140)	6,000 (26.7)	6,400 (28.5)	6,745 (30.0)	7,335 (32.6)	15,240 (67.8)	17,040 (75.8)	18,670 (83.0)	21,555 (95.9)
1	4 (102)	4 5/8 (117)	5,890 (26.2)	6,585 (29.3)	7,215 (32.1)	8,330 (37.0)	11,780 (52.4)	13,170 (58.6)	14,425 (64.2)	16,660 (74.1)
	5 3/4 (146)	6 3/8 (162)	8,275 (36.8)	9,250 (41.1)	10,135 (45.1)	11,700 (52.0)	20,300 (90.3)	22,695 (101.0)	24,865 (110.6)	28,710 (127.7)

1 See Section 3.1.8 to convert factored resistance value to ASD value.
2 Linear interpolation between embedment depths and concrete compressive strengths is not permitted.
3 Apply spacing, edge distance, and concrete thickness factors in tables 6 to 17 as necessary. Compare to the steel values in Table 39. The lesser of the values is to be used for the design.
4 Tabular values are for normal weight concrete only. For lightweight concrete multiply design strength by λ_a as follows: For sand-lightweight, λ_a = 0.68; for all-lightweight, λ_a = 0.60.
5 Tabular values are for static loads only. Seismic design is not permitted for uncracked concrete. For seismic tension loads, multiply cracked concrete tabular values in tension only by $\alpha_{N,seis}$ = 0.75, except for 3/4 x 4-3/4 h_{ef} where $\alpha_{N,seis}$ = 0.73. No reduction needed for seismic shear. See Section 3.1.8 for additional information on seismic applications.
6 For core drilled installations of 3/4" anchors installed at 3-3/4" effective embedment, apply a reduction factor of 0.89 to the design tension strength

Table 42 — Hilti KB-TZ2 stainless steel tension design information in accordance with CSA A23.3 Annex D, applicable for both hammer and core drilled installations [1]

Design parameter	Symbol	Units	Nominal anchor diameter (in.)															Ref
			1/4	3/8			1/2			5/8			3/4			1		A23.3
Effective min. embedment [2]	h_{ef}	in.	1-1/2	1-1/2	2	2-1/2	2	2-1/2	3-1/4	2-3/4	3-1/4	4	3-1/4	3-3/4	4-3/4	4	5-3/4	
		(mm)	(38)	(38)	(51)	(64)	(51)	(64)	(83)	(70)	(83)	(102)	(83)	(95)	(121)	(102)	(146)	
Min. concrete thickness	h_{min}	in. (mm)	See Table 19															
Minimum edge distance	c_{min}	in. (mm)	See Table 19															
Minimum anchor spacing	s_{min}	in. (mm)	See Table 19															
Tension, steel failure modes																		
Steel embed. material resistance factor for reinforcement	Φ_s	-	0.85	0.85			0.85			0.85			0.85			0.85		8.4.3
Resistance modification factor for tension, steel failure modes [3]	R	-	0.80	0.80			0.80			0.80			0.80			0.80		
Min. specified yield strength	f_{ya}	psi	100,900	96,300			96,300			91,600			84,100			65,000		
		(N/mm²)	(696)	(664)			(664)			(632)			(580)			(448)		
Min. specified ult. strength	f_{ut}	psi	122,400	120,100			120,400			114,600			100,500			99,900		
		(N/mm²)	(844)	(828)						(790)			(693)			(689)		
Effective tensile stress area	$A_{se,N}$	in²	0.024	0.051			0.099			0.164			0.239			0.470		
		(mm²)	(15.4)	(33.2)			(63.6)			(106.0)			(154.4)			(303.2)		
Factored steel resistance in tension	N_{sar}	lb	2,050	4,210			8,070			12,810			16,350			31,930		D.6.1.2
		(kN)	(9.1)	(18.7)			(35.9)			(57.0)			(72.7)			(142.0)		
Tension, concrete failure modes																		
Anchor category	-	-	3	1			1			1			1			1		D.5.3 (c)
Concrete material resistance factor	Φ_c	-	0.65	0.65			0.65			0.65			0.65			0.65		8.4.2
Resistance modification factor for tension and shear, concrete failure modes, Condition B [5]	R	-	0.75	1.00			1.00			1.00			1.00			1.00		D.5.3 (c)
Coeff. for factored conc. breakout resistance, uncracked concrete	$k_{c,uncr}$	-	10.0	10.0	10.0	10.0	10.0	10.0	10.0	10.0	10.0	10.0	10.0	11.3[7]	10.0	11.3	11.3	D.6.2.2
Coeff. for factored conc. breakout resistance, cracked concrete	$k_{c,cr}$	-	7.1	8.8	8.8	7.1	7.1	8.8	7.1	8.8	8.8	7.1	8.8	8.8[7]	8.8	10.0	8.8	D.6.2.2
Modification factor for anchor resistance, tension, uncracked conc. [4]	$\Psi_{c,N}$	-	1.0	1.0			1.0			1.0			1.0			1.0		
Critical edge distance	c_{ac}	in.	4	4-1/2	5-1/2	4-1/8	5-1/2	6-1/4	7-1/2	10	7	9	12	10	10	11	15-1/2	
		(mm)	(102)	(114)	(140)	(105)	(140)	(159)	(191)	(254)	(178)	(229)	(305)	(254)	(254)	(279)	(394)	
Factored pullout resistance in 20 MPa uncracked concrete [6]	$N_{pr,uncr}$	lb	810	N/A	N/A	2,875	2,355	2,810	3,855	2,860	4,165	5,615	N/A	N/A	N/A	N/A	N/A	D.6.3.2
		(kN)	(3.6)			(12.8)	(10.5)	(12.5)	(17.1)	(12.7)	(18.5)	(25.0)						
Factored pullout resistance in 20 MPa cracked concrete [6]	$N_{pr,cr}$	lb	360	N/A	N/A	N/A	N/A	N/A	N/A[8]	N/A	N/A	N/A	N/A	N/A	6,160	N/A	N/A	D.6.3.2
		(kN)	(1.6)												(27.4)			
Factored pullout resistance in 20 MPa cracked concrete, seismic [6]	$N_{pr,eq}$	lb	360	N/A	N/A	N/A	N/A	N/A	N/A[8]	N/A	N/A	N/A	N/A	N/A	6,160	N/A	N/A	D.6.3.2
		(kN)	(1.6)												(27.4)			
Normalization factor, uncracked concrete	n_{uncr}	-	0.39	N/A	N/A	0.37	0.46	0.50	0.50	0.50	0.42	0.47	N/A	N/A	0.30	N/A	N/A	
Normalization factor, cracked concrete, seismic	n_{cr}	-	0.50	N/A	N/A	N/A	N/A	N/A	0.50	N/A	N/A	N/A	N/A	N/A	0.50	N/A	N/A	

1 Design information in this table is taken from ICC-ES ESR-4266, dated December, 2020, and revised July, 2021 Tables 5 and 7, and converted for use with CSA A23.3 Annex D.
2 See Figure 1 of this document.
3 The KB-TZ2 stainless steel anchor is considered a ductile steel element as defined by CSA A23.3 Annex D section D.2.
4 For all design cases, $\Psi_{c,N}$ = 1.0. The appropriate coefficient for breakout resistance for cracked concrete ($k_{c,cr}$) or uncracked concrete ($k_{c,uncr}$) must be used.
5 For use with the load combinations of CSA A23.3 chapter 8. Condition B applies where supplementary reinforcement in conformance with CSA A23.3 section D.5.3 is not provided, or where pullout or pryout strength governs. For cases where the presence of supplementary reinforcement can be verified, the resistance modification factors associated with Condition A may be used.
6 For all design cases, $\Psi_{c,P}$ = 1.0. Tabular value for pullout strength is for a concrete compressive strength of 2,900 psi (20.0 MPa). Pullout strength for concrete compressive strength greater than 2,900 psi (20.2 MPa) may be increased by multiplying the tabular pullout strength by (f'_c / 2,900)n for psi, or (f'_c / 20.2)^n for MPa.
7 For core drilled installation $k_{c,uncr}$ = 10.0 and $k_{c,cr}$ = 7.1 for 3/4" diameter installed at 3-3/4" effective embedment
8 For core drilled installation, $N_{p,c}r$ = 4245 lb (18.9 kN) and $N_{p,eq}$ = 4245 lb (18.9 kN) for 1/2-inch diameter anchors installed at 3-3/4 inches (95 mm) effective embedment.

Table 43 — Hilti KB-TZ2 stainless steel shear design information in accordance with CSA A23.3 Annex D, applicable for both hammer and core drilled installations[1]

Design parameter	Symbol	Units	Nominal anchor diameter (in.)															Ref
			1/4	3/8			1/2			5/8			3/4			1		A23.3
Anchor O.D.	d_a	in.	0.25	0.375			0.5			0.625			0.75			1.00		
		(mm)	(6.4)	(9.5)			(12.7)			(15.9)			(19.1)			(25.4)		
Effective min. embedment [2]	h_{ef}	in.	1-1/2	1-1/2	2	2-1/2	2	2-1/2	3-1/4	2-3/4	3-1/4	4	3-1/4	3-3/4	4-3/4	4	5-3/4	
		(mm)	(38)	(38)	(51)	(64)	(51)	(64)	(83)	(70)	(83)	(102)	(83)	(95)	(121)	(102)	(146)	
Shear, steel failure modes																		
Steel embed. material resistance factor for reinforcement	Φ_s	-	0.85	0.85			0.85			0.85			0.85			0.85		8.4.3
Resistance modification factor for shear, steel failure modes [3]	R	-	0.75	0.75			0.75			0.75			0.75			0.75		
Factored steel resistance in shear	V_{sar}	lb	930	2,940	3,115		5,320			7,875			10,555			14,635	20,020	D.7.1.2
		(kN)	(4.1)	(13.1)	(13.9)		(23.7)			(35.0)			(47.0)			(65.1)	(89.1)	
Factored steel resistance in shear, seismic	$V_{sar,eq}$	lb	710	2,940	3,115		5,320			7,875			8,585			8,585		
		(kN)	(3.2)	(13.1)	(13.9)		(23.7)			(35.0)			(38.2)			(38.2)		
Shear, concrete failure modes																		
Concrete material resistance factor	Φ_c	-	0.65	0.65			0.65			0.65			0.65			0.65		8.4.2
Resistance modification factor for shear, concrete failure modes [4]	R	-	0.75	1.00			1.00			1.00			1.00			1.00		D.5.3 (c)
Load bearing length of anchor in shear	ℓ_e	in.	1-1/2	1-1/2	2	2-1/2	2	2-1/2	3-1/4	2-3/4	3-1/4	4	3-1/4	3-3/4	4-3/4	4	5-3/4	
		(mm)	(38)	(38)	(51)	(64)	(51)	(64)	(83)	(70)	(83)	(102)	(83)	(95)	(121)	(102)	(146)	
Effectiveness factor for pryout	k_{cp}	-	1.0	1.0	1.0	2.0	1.0	2.0	2.0	2.0	2.0	2.0	2.0	2.0	2.0	2.0	2.0	

1 Design information in this table is taken from ICC-ES ESR-4266, dated December, 2020, and revised July, 2021 Tables 5 and 7, and converted for use with CSA A23.3 Annex D.
2 See Figure 1 of this document.
3 The KB-TZ2 stainless steel anchor is considered a ductile steel element as defined by CSA A23.3 Annex D section D.2.
4 For use with the load combinations of CSA A23.3 chapter 8. Condition B applies where supplementary reinforcement in conformance with CSA A23.3 section D.5.3 is not provided, or where pullout or pryout strength governs. For cases where the presence of supplementary reinforcement can be verified, the resistance modification factors associated with Condition A may be used.

Table 44 — Steel resistance for Hilti KB-TZ2 stainless steel anchors [1,2]

Nominal anchor diameter in.	Effective embedment depth in. (mm)			Tensile [3] N_{sar} lb (kN)	Shear [4] V_{sar} lb (kN)	Seismic Shear [5] $V_{sar,eq}$ lb (kN)
1/4	1-1/2 (38)			2,050 (9.1)	930 (4.1)	710 (3.2)
3/8	1-1/2 (38)			4,210 (18.7)	2,940 (13.1)	2,940 (13.1)
3/8	2 (51)	2-1/2 (64)		4,210 (18.7)	3,115 (13.9)	3,115 (13.9)
1/2	2 (51)	2-1/2 (64)	3-1/4 (83)	8,070 (35.9)	5,320 (23.7)	5,320 (23.7)
5/8	2-3/4 (70)	3-1/4 (83)	4 (102)	12,810 (57.0)	7,875 (35.0)	7,875 (35.0)
3/4	3-1/4 (83)	3-3/4 (95)	4-3/4 (121)	16,350 (72.7)	10,555 (47.0)	8,585 (38.2)
1	4 (102)			31,930 (142.0)	14,635 (65.1)	8,585 (38.2)
1	5-3/4 (146)			31,930 (142.0)	20,020 (89.1)	8,585 (38.2)

1 See Section 3.1.8 to convert factored resistance value to ASD value.
2 Hilti KB-TZ2 stainless steel anchors are to be considered ductile steel elements.
3 Tensile Nsar = Ase,N fs futa R as noted in CSA A23.3 Annex D.
4 Shear determined by static shear tests with Vsar < 0.6 Ase,V fs futa R as noted in CSA A23.3 Annex D.
5 Seismic shear values determined by seismic shear tests with Vsar,eq < 0.60 Ase,V fs futa R as noted in CSA A23.3 Annex D. See Section 3.1.8 for additional information on seismic applications.

Table 45 — Hilti KB-TZ2 stainless steel factored resistance based on concrete failure modes in uncracked concrete, applicable for both hammer and core drilled installations [1,2,3,4]

Nominal anchor diameter in.	Effective embedment in. (mm)	Nominal embedment in. (mm)	Tension - N_r				Shear - V_r			
			f'_c = 20 MPa (2,900 psi) lb (kN)	f'_c = 25 MPa (3,625 psi) lb (kN)	f'_c = 30 MPa (4,350 psi) lb (kN)	f'_c = 40 MPa (5,800 psi) lb (kN)	f'_c = 20 MPa (2,900 psi) lb (kN)	f'_c = 25 MPa (3,625 psi) lb (kN)	f'_c = 30 MPa (4,350 psi) lb (kN)	f'_c = 40 MPa (5,800 psi) lb (kN)
1/4	1 1/2 (38)	1 3/4 (44)	810 (3.6)	885 (3.9)	950 (4.2)	1,065 (4.7)	1,535 (6.8)	1,720 (7.6)	1,880 (8.4)	2,175 (9.7)
3/8	1 1/2 (38)	1 7/8 (48)	1,535 (6.8)	1,720 (7.6)	1,880 (8.4)	2,175 (9.7)	1,535 (6.8)	1,720 (7.6)	1,880 (8.4)	2,175 (9.7)
	2 (51)	2 1/2 (64)	2,365 (10.5)	2,645 (11.8)	2,900 (12.9)	3,345 (14.9)	2,365 (10.5)	2,645 (11.8)	2,900 (12.9)	3,345 (14.9)
	2 1/2 (64)	3 (76)	2,875 (12.8)	3,125 (13.9)	3,340 (14.9)	3,715 (16.5)	6,615 (29.4)	7,395 (32.9)	8,100 (36.0)	9,355 (41.6)
1/2	2 (51)	2 1/2 (64)	2,355 (10.5)	2,610 (11.6)	2,835 (12.6)	3,240 (14.4)	2,365 (10.5)	2,645 (11.8)	2,900 (12.9)	3,345 (14.9)
	2-1/2 (64)	3 (76)	2,810 (12.5)	3,140 (14.0)	3,440 (15.3)	3,975 (17.7)	6,615 (29.4)	7,395 (32.9)	8,100 (36.0)	9,355 (41.6)
	3 1/4 (83)	3 3/4 (95)	3,855 (17.1)	4,310 (19.2)	4,720 (21.0)	5,450 (24.2)	9,805 (43.6)	10,960 (48.8)	12,005 (53.4)	13,865 (61.7)
5/8	2 3/4 (70)	3 1/4 (83)	2,860 (12.7)	3,200 (14.2)	3,505 (15.6)	4,045 (18.0)	7,630 (33.9)	8,530 (37.9)	9,345 (41.6)	10,790 (48.0)
	3 1/4 (83)	3 3/4 (95)	4,165 (18.5)	4,575 (20.3)	4,935 (22.0)	5,570 (24.8)	9,805 (43.6)	10,960 (48.8)	12,005 (53.4)	13,865 (61.7)
	4 (102)	4 1/2 (114)	5,615 (25.0)	6,235 (27.7)	6,795 (30.2)	7,775 (34.6)	13,385 (59.5)	14,965 (66.6)	16,395 (72.9)	18,930 (84.2)
3/4	3 1/4 (83)	4 (102)	4,900 (21.8)	5,480 (24.4)	6,005 (26.7)	6,930 (30.8)	9,805 (43.6)	10,960 (48.8)	12,005 (53.4)	13,865 (61.7)
	3 3/4[6] (95)	4 1/2 (114)	6,865 (30.5)	7,675 (34.1)	8,405 (37.4)	9,710 (43.2)	13,730 (61.1)	15,350 (68.3)	16,815 (74.8)	19,415 (86.4)
	4 3/4 (121)	5 1/2 (140)	8,660 (38.5)	9,685 (43.1)	10,605 (47.2)	12,250 (54.5)	17,320 (77.0)	19,365 (86.1)	21,215 (94.4)	24,495 (109.0)
1	4 (102)	4 5/8 (117)	7,560 (33.6)	8,455 (37.6)	9,260 (41.2)	10,695 (47.6)	15,125 (67.3)	16,910 (75.2)	18,525 (82.4)	21,390 (95.1)
	5 3/4 (146)	6 3/8 (162)	13,035 (58.0)	14,570 (64.8)	15,965 (71.0)	18,435 (82.0)	26,070 (116.0)	29,145 (129.6)	31,925 (142.0)	36,865 (164.0)

Table 46 — Hilti KB-TZ2 stainless steel factored resistance based on concrete failure modes in cracked concrete, applicable for both hammer and core drilled installations [1,2,3,4]

Nominal anchor diameter in.	Effective embedment in. (mm)	Nominal embedment in. (mm)	Tension - N_r				Shear - V_r			
			f'_c = 20 MPa (2,900 psi) lb (kN)	f'_c = 25 MPa (3,625 psi) lb (kN)	f'_c = 30 MPa (4,350 psi) lb (kN)	f'_c = 40 MPa (5,800 psi) lb (kN)	f'_c = 20 MPa (2,900 psi) lb (kN)	f'_c = 25 MPa (3,625 psi) lb (kN)	f'_c = 30 MPa (4,350 psi) lb (kN)	f'_c = 40 MPa (5,800 psi) lb (kN)
1/4	1 1/2 (38)	1 3/4 (44)	470 (2.1)	525 (2.3)	575 (2.6)	665 (3.0)	820 (3.6)	915 (4.1)	1,000 (4.5)	1,155 (5.1)
3/8	1 1/2 (38)	1 7/8 (48)	1,350 (6.0)	1,510 (6.7)	1,655 (7.4)	1,915 (8.5)	1,350 (6.0)	1,510 (6.7)	1,655 (7.4)	1,915 (8.5)
	2 (51)	2 1/2 (64)	2,080 (9.3)	2,330 (10.4)	2,550 (11.3)	2,945 (13.1)	2,080 (9.3)	2,330 (10.4)	2,550 (11.3)	2,945 (13.1)
	2 1/2 (64)	3 (76)	2,350 (10.4)	2,625 (11.7)	2,875 (12.8)	3,320 (14.8)	4,695 (20.9)	5,250 (23.4)	5,750 (25.6)	6,640 (29.5)
1/2	2 (51)	2 1/2 (64)	1,680 (7.5)	1,880 (8.4)	2,060 (9.2)	2,375 (10.6)	1,680 (7.5)	1,880 (8.4)	2,060 (9.2)	2,375 (10.6)
	2-1/2 (64)	3 (76)	2,910 (12.9)	3,255 (14.5)	3,565 (15.9)	4,115 (18.3)	5,820 (25.9)	6,505 (28.9)	7,130 (31.7)	8,230 (36.6)
	3 1/4[8] (83)	3 3/4 (95)	3,480 (15.5)	3,890 (17.3)	4,260 (19.0)	4,920 (21.9)	6,960 (31.0)	7,780 (34.6)	8,525 (37.9)	9,845 (43.8)
5/8	2 3/4 (70)	3 1/4 (83)	3,355 (14.9)	3,755 (16.7)	4,110 (18.3)	4,750 (21.1)	6,715 (29.9)	7,505 (33.4)	8,225 (36.6)	9,495 (42.2)
	3 1/4 (83)	3 3/4 (95)	4,315 (19.2)	4,820 (21.5)	5,285 (23.5)	6,100 (27.1)	8,625 (38.4)	9,645 (42.9)	10,565 (47.0)	12,200 (54.3)
	4 (102)	4 1/2 (114)	4,750 (21.1)	5,310 (23.6)	5,820 (25.9)	6,720 (29.9)	9,505 (42.3)	10,625 (47.3)	11,640 (51.8)	13,440 (59.8)
3/4	3 1/4 (83)	4 (102)	4,315 (19.2)	4,820 (21.5)	5,285 (23.5)	6,100 (27.1)	8,625 (38.4)	9,645 (42.9)	10,565 (47.0)	12,200 (54.3)
	3 3/4[7] (95)	4 1/2 (114)	5,345 (23.8)	5,975 (26.6)	6,545 (29.1)	7,560 (33.6)	10,690 (47.6)	11,955 (53.2)	13,095 (58.2)	15,120 (67.3)
	4 3/4 (121)	5 1/2 (140)	6,160 (27.4)	6,890 (30.6)	7,545 (33.6)	8,715 (38.8)	15,240 (67.8)	17,040 (75.8)	18,670 (83.0)	21,555 (95.9)
1	4 (102)	4 5/8 (117)	6,690 (29.8)	7,480 (33.3)	8,195 (36.5)	9,465 (42.1)	13,385 (59.5)	14,965 (66.6)	16,395 (72.9)	18,930 (84.2)
	5 3/4 (146)	6 3/8 (162)	10,150 (45.2)	11,350 (50.5)	12,430 (55.3)	14,355 (63.9)	20,300 (90.3)	22,695 (101.0)	24,865 (110.6)	28,710 (127.7)

1 See Section 3.1.8 to convert factored resistance value to ASD value.
2 Linear interpolation between embedment depths and concrete compressive strengths is not permitted.
3 Apply spacing, edge distance, and concrete thickness factors in tables 22 to 33 as necessary. Compare to the steel values in Table 43. The lesser of the values is to be used for the design.
4 Tabular values are for normal weight concrete only. For lightweight concrete multiply design strength by λ_a as follows: For sand-lightweight, λ_a = 0.68; for all-lightweight, λ_a = 0.60.
5 Tabular values are for static loads only. Seismic design is not permitted for uncracked concrete. For seismic tension loads, multiply cracked concrete tabular values in tension only by $\alpha_{N,seis}$ = 0.75. No reduction needed for seismic shear, except for the 3/4 bolts where $\alpha_{V,seis}$ = 0.81. See Section 3.1.8 for additional information on seismic applications.
6 For core drilled installations of 3/4" anchors installed at 3-3/4" effective embedment, apply a reduction factor of 0.89 to the design tension strength.
7 For core drilled installations of 3/4" anchors installed at 3-3/4" effective embedment, apply a reduction factor of 0.81 to the design tension strength.
8 Fore core drilled installations of 1/2" anchors installed at 3-1/4" effective embedment, apply a reduction factor of 0.85 to the design tension strength.

Table 47 — Hilti KB-TZ2 carbon steel factored resistance in the soffit of uncracked lightweight concrete over metal deck, applicable for both hammer and core drilled installations[1,2,3,4,5,6]

Nominal anchor diameter in.	Nominal embedment in. (mm)	Installation per Figure 4				Installation per Figure 5			
		Min. conc. thickness [8] in. (mm)	Tension - N_r		Shear - V_r	Min. conc. thickness [8] in. (mm)	Tension - N_r		Shear - V_r
			f'_c = 20 MPa (2,900 psi) lb (kN)	f'_c = 30 MPa (4,350 psi) lb (kN)	f'_c ≥ 20 MPa (2,900 psi) lb (kN)		f'_c = 20 MPa (2,900 psi) lb (kN)	f'_c = 30 MPa (4,350 psi) lb (kN)	f'_c ≥ 20 MPa (2,900 psi) lb (kN)
1/4	1-3/4 (44)	2-1/2 (64)	835 (3.7)	905 (4.0)	1,040 (4.6)	2-1/4 (57)	670 (3.0)	725 (3.2)	715 (3.2)
3/8	1-7/8 (48)	2-1/2 (64)	1,195 (5.3)	1,310 (5.8)	865 (3.8)	2-1/4 (57)	640 (2.8)	700 (3.1)	1,510 (6.7)
	2-1/2 (64)	2-1/2 (64)	1,690 (7.5)	1,865 (8.3)	1,350 (6.0)	2-1/4 (57)	1600 (7.1)	1,765 (7.9)	1,595 (7.1)
	3 (76)	2-1/2 (64)	1,925 (8.6)	2,215 (9.9)	1,350 (6.0)	N/A	N/A	N/A	N/A
1/2	2 (51)	2-1/2 (64)	1,185 (5.3)	1,450 (6.4)	1,140 (5.1)	2-1/4 (57)	1,160 (5.2)	1,420 (6.3)	1,710 (7.6)
	2-1/2 (64)	2-1/2 (64)	1,760 (7.8)	2,090 (9.3)	1,440 (6.4)	2-1/4 (57)	1,220 (5.4)	1,445 (6.4)	2,025 (9.0)
	3-1/4 (83)	2-1/2 (64)	2,410 (10.7)	2,710 (12.1)	2,095 (9.3)	N/A	N/A	N/A	N/A
	3-3/4 (95)	2-1/2 (64)	3,030 (13.5)	3,490 (15.5)	2,700 (12.0)	3-1/4 (83)	1,710 (7.6)	1,975 (8.8)	2,210 (9.8)
5/8	3-1/4 (83)	2-1/2 (64)	2,820 (12.5)	3,455 (15.4)	2,430 (10.8)	3-1/4 (83)	1,890 (8.4)	2,315 (10.3)	2,605 (11.6)
	4-1/2 (114)	2-1/2 (64)	3,715 (16.5)	4,550 (20.2)	2,965 (13.2)	N/A	N/A	N/A	N/A
3/4	4 (102)	2-1/2 (64)	2,440 (10.9)	2,815 (12.5)	2,605 (11.6)	N/A	N/A	N/A	N/A
	4-1/2[9] (114)	3-1/4 (83)	3,085 (13.7)	3,495 (15.5)	5,015 (22.3)	N/A	N/A	N/A	N/A

Table 48 — Hilti KB-TZ2 carbon steel factored resistance in the soffit of cracked lightweight concrete over metal deck, applicable for both hammer and core drilled installations [1,2,3,4,5,6,7]

Nominal anchor diameter in.	Nominal embedment in. (mm)	Installation per Figure 4				Installation per Figure 5			
		Min. conc. thickness [8] in. (mm)	Tension - N_r		Shear - V_r	Min. conc. thickness [8] in. (mm)	Tension - N_r		Shear - V_r
			f'_c = 20 MPa (2,900 psi) lb (kN)	f'_c = 30 MPa (4,350 psi) lb (kN)	f'_c ≥ 20 MPa (2,900 psi) lb (kN)		f'_c = 20 MPa (2,900 psi) lb (kN)	f'_c = 30 MPa (4,350 psi) lb (kN)	f'_c ≥ 20 MPa (2,900 psi) lb (kN)
1/4	1-3/4 (44)	2-1/2 (64)	250 (1.1)	290 (1.3)	1,040 (4.6)	2-1/4 (57)	195 (0.9)	230 (1.0)	715 (3.2)
3/8	1-7/8 (48)	2-1/2 (64)	1,040 (4.6)	1,270 (5.6)	865 (3.8)	2-1/4 (57)	555 (2.5)	680 (3.0)	1,510 (6.7)
	2-1/2 (64)	2-1/2 (64)	1,470 (6.5)	1,770 (7.9)	1,350 (6.0)	2-1/4 (57)	1,365 (6.1)	1,645 (7.3)	1,595 (7.1)
	3 (76)	2-1/2 (64)	1,550 (6.9)	1,735 (7.7)	1,350 (6.0)	N/A	N/A	N/A	N/A
1/2	2 (51)	2-1/2 (64)	1,055 (4.7)	1,275 (5.7)	1,140 (5.1)	2-1/4 (57)	945 (4.2)	1,160 (5.1)	1,710 (7.6)
	2-1/2 (64)	2-1/2 (64)	1,365 (6.1)	1,670 (7.4)	1,440 (6.4)	2-1/4 (57)	945 (4.2)	1,160 (5.2)	2,025 (9.0)
	3-1/4 (83)	2-1/2 (64)	2,095 (9.3)	2,545 (11.3)	2,095 (9.3)	N/A	N/A	N/A	N/A
	3-3/4 (95)	2-1/2 (64)	2,140 (9.5)	2,520 (11.2)	2,700 (12.0)	3-1/4 (83)	1,210 (5.4)	1,425 (6.3)	2,210 (9.8)
5/8	3-1/4 (83)	2-1/2 (64)	2,510 (11.2)	3,075 (13.7)	2,430 (10.8)	3-1/4 (83)	1,685 (7.5)	2,060 (9.2)	2,605 (11.6)
	4-1/2 (114)	2-1/2 (64)	2,810 (12.5)	3,440 (15.3)	2,965 (13.2)	N/A	N/A	N/A	N/A
3/4	4 (102)	2-1/2 (64)	2,135 (9.5)	2,470 (11.0)	2,605 (11.6)	N/A	N/A	N/A	N/A
	4-1/2 (114)	3-1/4 (83)	2,400 (10.7)	2,700 (12.0)	5,015 (22.3)	N/A	N/A	N/A	N/A

1 See Section 3.1.8 to convert design strength value to ASD value.
2 Linear interpolation between embedment depths and concrete compressive strengths is not permitted.
3 Tabular value is for one anchor per flute. Minimum spacing along the length of the flute is 3 x h_{ef} (effective embedment).
4 Tabular values are lightweight concrete and no additional reduction factor is needed.
5 No additional reduction factors for spacing or edge distance need to be applied.
6 Comparison of the tabular values to the steel strength is not necessary. Tabular values control.
7 Tabular values are for static loads only. Seismic design is not permitted for uncracked concrete. For seismic tension loads, multiply cracked concrete tabular values in tension only by $\alpha_{N,seis}$ = 0.75, except for 3/4 x 4-3/4 h_{ef} where $\alpha_{N,seis}$ = 0.73. See Section 3.1.8 for additional information on seismic applications.
8 Minimum concrete thickness over the upper flute when anchor is installed in the lower flute. See Figure 4 and 5.
9 For core drilled installations of 3/4" anchors installed at 4-1/2" nominal embedment, apply a reduction factor of 0.89 to the design tension strength of anchors installed in uncracked concrete.

Table 49 — Allowable tensile loads for Hilti KB-TZ2 carbon steel and stainless steel anchors in the face of grout-filled concrete masonry unit (CMU) walls [1,3,4,5,6]

Nominal anchor diameter	Nominal embedment		Allowable Tensile capacity at s_{cr} and c_{cr}		Spacing: Critical spacing, s_{cr}		Spacing: Minimum spacing[2], s_{min}		Spacing: Load Multiplier at s_{min}	Edge Distance: Critical edge distance, c_{cr}		Edge Distance: Minimum edge distance, c_{min}		Edge Distance: Load Multiplier at c_{min}
in.	in.	(mm)	lb	(kN)	in	(mm)	in	(mm)		in	(mm)	in	(mm)	
1/4	1-3/4	(44)	145	(0.6)	6	(152)	3	(76)	0.62	12	(305)	4	(102)	0.87
3/8	1-7/8	(48)	405	(1.8)	6	(152)			0.49					0.80
	3	(76)	590	(2.6)	10	(254)			0.58					0.93
1/2	2-1/2	(64)	500	(2.2)	8	(203)	4	(102)	0.59					0.94
	3-3/4	(95)	640	(2.8)	13	(330)			0.78					1.00
5/8	3-1/4	(83)	890	(4.0)	11	(279)	5	(127)	0.66	20	(508)			0.96
	4-1/2	(114)	940	(4.2)	16	(406)			0.61					0.96
3/4	4	(102)	1,245	(5.5)	13	(330)	6	(152)	0.49					0.75
	5-1/2	(140)	1,385	(6.2)	19	(483)			0.45					0.82

Table 50 — Allowable shear loads for Hilti KB-TZ2 carbon steel and stainless steel anchors in the face of grout-filled concrete masonry unit (CMU) walls [1,3,4,5,6]

Nominal anchor diameter	Nominal embedment		Allowable shear capacity at s_{cr} and c_{cr}		Spacing: Critical spacing, s_{cr}		Spacing: Minimum spacing, s_{min}[2]		Spacing: Load multiplier at s_{min}	Edge Distance: Critical edge distance, c_{cr}		Edge Distance: Minimum edge distance, c_{min}		Edge Distance: Perpendicular load reduction factor at c_{min}	Edge Distance: Parallel load reduction factor at c_{min}
in.	in.	(mm)	lb	(kN)	in	(mm)	in	(mm)		in	(mm)	in	(mm)		
1/4	1-3/4	(44)	320	(1.4)	6	(152)	3	(76)	0.73	12	(305)	4	(102)	1.00	1.00
3/8	1-7/8	(48)	585	(2.6)	6	(152)								0.76	0.99
	3	(76)	695	(3.1)	10	(254)									
1/2	2-1/2	(64)	1,045	(4.7)	8	(203)	4	(102)						0.50	0.83
	3-3/4	(95)			13	(330)									
5/8	3-1/4	(83)	1,735	(7.7)	11	(279)	5	(127)		20	(508)			0.36	0.75
	4-1/2	(114)	2,050	(9.1)	16	(406)								0.35	0.85
3/4	4	(102)	1,735	(7.7)	13	(330)	6	(152)						0.36	0.75
	5-1/2	(140)	2,050	(9.1)	19	(483)								0.35	0.85

1 Values valid for anchors installed in face shells of Type 1, Grade N, lightweight, medium-weight, or normal-weight concrete masonry units conforming to ASTM C90. The masonry units must be fully grouted with coarse grout conforming to 2018 and 2015 IBC Section 2103.3, 2012 IBC Section 2103.13, or 2009 IBC Section 2103.12. Mortar must comply with 2018 and 2015 IBC Section 2103.2.1, 2012 IBC Section 2103.9, or 2009 IBC Section 2103.8. Masonry compressive strength must be at least 1,500 psi at the time of anchor installation.
2 Loads tabulated are applicable to anchors spaced a critical distance of 4 times the effective embedment. The anchors may be placed at a minimum spacing, s_{min}, provided that reductions are applied to the tabulated values.
3 Anchors must be installed a minimum of 1-3/8-inches from any vertical mortar joint in accordance with Figure 6.
4 Embedment depth must be measured from the outside face of the concrete masonry unit.
5 For intermediate edge and spacing distances, allowable loads may be determined by linearly interpolating between the allowable loads at the two tabulated edge or spacing distances.
6 The tabulated allowable loads have been calculated based on a safety factor of 5.0.

Table 51 — Allowable tensile and shear loads for Hilti KB-TZ2 carbon and stainless steel anchors in the top of grout-filled concrete masonry walls [1,3,4,5,6]

Nominal anchor diameter	Nominal embedment		Minimum edge distance from edge of wall, C_{min}		Minimum spacing,[2] s_{min}		Minimum end distance C_{end}		Allowable tensile capacity		Allowable shear capacity			
											Parallel to edge of masonry wall		Perpendicular to edge of masonry wall	
in.	in.	(mm)	in	(mm)	in	(mm)	in	(mm)	lb	(kN)	lb	(kN)	lb	(kN)
3/8	1-7/8	(48)	1-3/4	(44)	6	(152)	12	(305)	300	(1.3)	325	(1.4)	175	(0.8)
	3	(76)			10	(254)	12	(305)	395	(1.8)	475	(2.1)	220	(1.0)
1/2	2-1/2	(64)			8	(203)	12	(305)	385	(1.7)	500	(2.2)	195	(0.9)
	3-3/4	(95)			13	(330)	12	(305)	485	(2.2)	610	(2.7)	240	(1.1)
5/8	3-1/4	(83)	2-3/4	(70)	11	(279)	12	(305)	620	(2.8)	930	(4.1)	410	(1.8)
	4-1/2	(114)			16	(406)	12	(305)	865	(3.8)	1240	(5.5)	465	(2.1)

1 Values valid for anchors installed in face shells of Type 1, Grade N, lightweight, medium-weight, or normal-weight concrete masonry units conforming to ASTM C90. The masonry units must be fully grouted with coarse grout conforming to 2018 and 2015 IBC Section 2103.3, 2012 IBC Section 2103.13, or 2009 IBC Section 2103.12. Mortar must comply with 2018 and 2015 IBC Section 2103.2.1, 2012 IBC Section 2103.9, or 2009 IBC Section 2103.8. Masonry compressive strength must be at least 1,500 psi at the time of anchor installation.
2 Loads tabulated are applicable to anchors spaced a critical distance of 4 times the effective embedment. The anchors may be placed at a minimum spacing, s_{min}, provided that reductions are applied to the tabulated values.
3 Anchors must be installed a minimum of 1-3/8 inches from any head joint in accordance with Figure 6.
4 Embedment depth must be measured from the outside face of the concrete masonry unit.
5 For intermediate edge and spacing distances, allowable loads may be determined by linearly interpolating between the allowable loads at the two tabulated edge or spacing distances.
6 The tabulated allowable loads have been calculated based on a safety factor of 5.0.

Figure 7 — Acceptable locations (shaded areas) for Hilti KB-TZ2 anchors in the face of grout-filled CMU walls

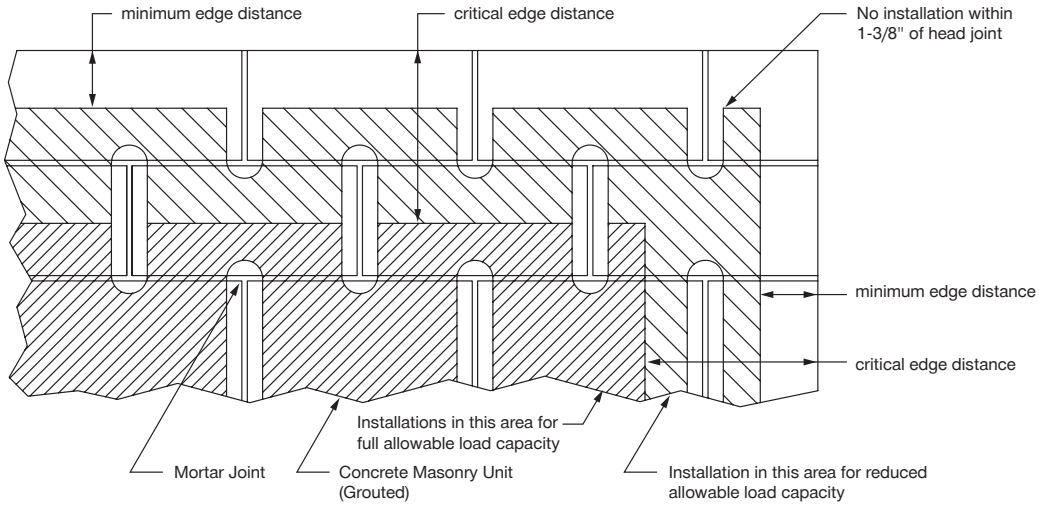

Anchor installation is restricted to shaded areas

Figure 8 — Edge and end distances for the Hilti KB-TZ2 anchors installed in the top of grout-filled CMU walls

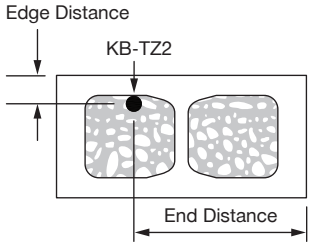

INSTALLATION INSTRUCTIONS

Installation Instructions For Use (IFU) are included with each product package. They can also be viewed or downloaded online at www.hilti.com. Because of the possibility of changes, always verify that downloaded IFU are current when used. Proper installation is critical to achieve full performance. Training is available on request. Contact Hilti Technical Services for applications and conditions not addressed in the IFU.

ORDERING INSTRUCTIONS

Table 52 — Hilti KB-TZ2 carbon steel product portfolio

Description	Length (in)	Length ident. letter	Thread length (in)	Nominal embed. 1 (in)	Min. fixture thickness 1 (in)	Max. fixture thickness 1 (in)	Nominal embed. 2 (in)	Min. fixture thickness 2 (in)	Max. fixture thickness 2 (in)	Nominal embed. 3 (in)	Min. fixture thickness 3 (in)	Max. fixture thickness 3 (in)	Nominal embed. 4 (in)	Min. fixture thickness 4 (in)	Max. fixture thickness 4 (in)	Package quantity
KB-TZ2 1/4 x 2-1/8	2-1/8	B	7/8	1-3/4	0	1/8	-	-	-	-	-	-	-	-	-	100
KB-TZ2 1/4 x 2-1/2	2-1/2	C	1-1/4	1-3/4	0	1/2	-	-	-	-	-	-	-	-	-	100
KB-TZ2 1/4 x 3-1/4	3-1/4	D	2	1-3/4	0	1-1/4	-	-	-	-	-	-	-	-	-	100
KB-TZ2 1/4 x 4-1/2	4-1/2	G	3	1-3/4	1/8	2-1/2	-	-	-	-	-	-	-	-	-	100
KB-TZ2 3/8 x 2-1/2	2-1/2	C	1	1-7/8	0	1/4	-	-	-	-	-	-	-	-	-	50
KB-TZ2 3/8 x 3	3	D	1 1/2	1-7/8	0	3/4	2-1/2	0	1/4	-	-	-	-	-	-	50
KB-TZ2 3/8 x 3-1/2	3-1/2	Ω	2	1-7/8	0	1-1/4	2-1/2	0	3/4	3	0	1/4	-	-	-	50
KB-TZ2 3/8 x 3-3/4	3-3/4	E	2-1/4	1-7/8	0	1-1/2	2-1/2	0	1	3	0	1/2	-	-	-	50
KB-TZ2 3/8 x 5	5	H	3-1/2	1-7/8	0	2-3/4	2-1/2	0	2-1/4	3	0	1-3/4	-	-	-	50
KB-TZ2 3/8 x 7	7	L	4-7/8	1-7/8	1/2	4-3/4	2-1/2	0	4-1/4	3	0	3-3/4	-	-	-	50
KB-TZ2 1/2 x 3	3	D	1-1/8	2	1/4	1/2	2-1/2	0	0	-	-	-	-	-	-	20
KB-TZ2 1/2 x 3-3/4	3-3/4	E	1-5/8	2	1/2	1-1/4	2-1/2	0	3/4	3	0	1/4	-	-	-	20
KB-TZ2 1/2 x 4-1/2	4-1/2	G	2-3/8	2	1/2	2	2-1/2	0	1-1/2	3	0	1	3-3/4	0	1/4	20
KB-TZ2 1/2 x 5-1/2	5-1/2	I	3-3/8	2	1/2	3	2-1/2	0	2-1/2	3	0	2	3-3/4	0	1-1/4	20
KB-TZ2 1/2 x 7	7	L	4-3/4	2	5/8	4-1/2	2-1/2	1/8	4	3	0	3-1/2	3-3/4	0	2-3/4	20
KB-TZ2 1/2 x 8-1/2	8-1/2	O	4-7/8	2	2	6	2-1/2	1-1/2	5-1/2	3	1	5	3-3/4	1/4	4-1/4	20
KB-TZ2 1/2 x 10	10	R	4-7/8	2	3-1/2	7-1/2	2-1/2	3	7	3	2-1/2	6-1/2	3-3/4	1-3/4	5-3/4	20
KB-TZ2 5/8 x 4-1/4	4-1/4	F	2-1/4	3-1/4	0	3/8	-	-	-	-	-	-	-	-	-	15
KB-TZ2 5/8 x 4-3/4	4-3/4	G	2-3/4	3-1/4	0	7/8	3-3/4	0	3/8	-	-	-	-	-	-	15
KB-TZ2 5/8 x 5-1/2	5-1/2	I	3-1/2	3-1/4	0	1-5/8	3-3/4	0	1-1/8	4-1/2	0	3/8	-	-	-	15
KB-TZ2 5/8 x 6	6	J	4	3-1/4	0	2-1/8	3-3/4	0	1-5/8	4-1/2	0	7/8	-	-	-	15
KB-TZ2 5/8 x 7	7	L	4-7/8	3-1/4	0	3-1/8	3-3/4	0	2-5/8	4-1/2	0	1-7/8	-	-	-	15
KB-TZ2 5/8 x 8-1/2	8-1/2	O	6-1/2	3-1/4	0	4-5/8	3-3/4	0	4-1/8	4-1/2	0	3-3/8	-	-	-	15
KB-TZ2 5/8 x 10	10	R	7-1/8	3-1/4	1/8	6-1/8	3-3/4	0	5-5/8	4-1/2	0	4-7/8	-	-	-	15
KB-TZ2 3/4 x 4-3/4	4-3/4	G	2-1/2	4	0	1/8	-	-	-	-	-	-	-	-	-	10
KB-TZ2 3/4 x 5-1/2	5-1/2	I	3-1/4	4	0	7/8	4-1/2	0	3/8	-	-	-	-	-	-	10
KB-TZ2 3/4 x 6-1/4	6-1/4	J	3-1/4	4	0	1-5/8	4-1/2	0	1-1/8	5-1/2	0	1/8	-	-	-	10
KB-TZ2 3/4 x 7	7	L	4	4	0	2-3/8	4-1/2	0	1-7/8	5-1/2	0	7/8	-	-	-	10
KB-TZ2 3/4 x 8	8	N	5	4	0	3-3/8	4-1/2	0	2-7/8	5-1/2	0	1-7/8	-	-	-	10
KB-TZ2 3/4 x 9	9	P	6	4	0	4-3/8	4-1/2	0	3-7/8	5-1/2	0	2-7/8	-	-	-	10
KB-TZ2 3/4 x 10	10	R	7	4	0	5-3/8	4-1/2	0	4-7/8	5-1/2	0	3-7/8	-	-	-	10
KB-TZ2 1x6-1/2	6-1/2	K	2 1/2	4 5/8	0	1-1/8	6-3/8	-	-	-	-	-	-	-	-	10
KB-TZ2 1x8	8	N	3 7/8	4 5/8	0	2-5/8	6-3/8	0	7/8	-	-	-	-	-	-	10
KB-TZ2 1x9	9	P	3 7/8	4 5/8	7/8	3-5/8	6-3/8	0	1-7/8	-	-	-	-	-	-	10
KB-TZ2 1x10-1/2	10-1/2	R	6	4 5/8	3/8	5-1/8	6-3/8	0	3-3/8	-	-	-	-	-	-	10
KB-TZ2 1x12	12	T	6	4 5/8	1-7/8	6-5/8	6-3/8	1/8	4-7/8	-	-	-	-	-	-	10

Table 53 — Hilti KB-TZ2 SS304 product portfolio

Description	Length (in)	Length ident. letter	Thread length (in)	Nominal embed. 1 (in)	Min. fixture thickness 1 (in)	Max. fixture thickness 1 (in)	Nominal embed. 2 (in)	Min. fixture thickness 2 (in)	Max. fixture thickness 2 (in)	Nominal embed. 3 (in)	Min. fixture thickness 3 (in)	Max. fixture thickness 3 (in)	Package quantity
KB-TZ2 1/4x2-1/8 SS304	2-1/8	B	7/8	1-3/4	0	1/8	-	-	-	-	-	-	100
KB-TZ2 1/4x2-1/2 SS304	2-1/2	C	1 1/4	1-3/4	0	1/2	-	-	-	-	-	-	100
KB-TZ2 1/4x3-1/4 SS304	3-1/4	D	2	1-3/4	0	1-1/4	-	-	-	-	-	-	100
KB-TZ2 1/4x4-1/2 SS304	4-1/2	G	3	1-3/4	1/8	2-1/2	-	-	-	-	-	-	100
KB-TZ2 3/8x2-1/2 SS304	2-1/2	C	1	1-7/8	0	1/4	-	-	-	-	-	-	50
KB-TZ2 3/8x3 SS304	3	D	1 1/2	1-7/8	0	3/4	2-1/2	0	1/4	-	-	-	50
KB-TZ2 3/8x3-1/2 SS304	3-1/2	Ω	2	1-7/8	0	1-1/4	2-1/2	0	3/4	3	0	1/4	50
KB-TZ2 3/8x3-3/4 SS304	3-3/4	E	2 1/4	1-7/8	0	1-1/2	2-1/2	0	1	3	0	1/2	50
KB-TZ2 3/8x5 SS304	5	H	3 1/2	1-7/8	0	2-3/4	2-1/2	0	2-1/4	3	0	1-3/4	50
KB-TZ2 3/8x7 SS304	7	L	4 7/8	1-7/8	1/2	4-3/4	2-1/2	0	4-1/4	3	0	3-3/4	50
KB-TZ2 1/2x3-3/4 SS304	3-3/4	E	1 5/8	2-1/2	0	3/4	3	0	1/4	-	-	-	20
KB-TZ2 1/2x4-1/2 SS304	4-1/2	G	2 3/8	2-1/2	0	1-1/2	3	0	1	3-3/4	0	1/4	20
KB-TZ2 1/2x5-1/2 SS304	5-1/2	I	3 3/8	2-1/2	0	2-1/2	3	0	2	3-3/4	0	1-1/4	20
KB-TZ2 1/2x7 SS304	7	L	4 3/4	2-1/2	1/8	4	3	0	3-1/2	3-3/4	0	2-3/4	20
KB-TZ2 5/8x4-1/4 SS304	4-1/4	F	2 1/4	3-1/4	0	3/8	-	-	-	-	-	-	15
KB-TZ2 5/8x4-3/4 SS304	4-3/4	G	2 3/4	3-1/4	0	7/8	3-3/4	0	3/8	-	-	-	15
KB-TZ2 5/8x6 SS304	6	J	4	3-1/4	0	2-1/8	3-3/4	0	1-5/8	4-1/2	0	7/8	15
KB-TZ2 5/8x7 SS304	7	L	4 7/8	3-1/4	0	3-1/8	3-3/4	0	2-5/8	4-1/2	0	1-7/8	15
KB-TZ2 5/8x8-1/2 SS304	8-1/2	O	6 1/2	3-1/4	0	4-5/8	3-3/4	0	4-1/8	4-1/2	0	3-3/8	15
KB-TZ2 5/8x10 SS304	10	R	7 1/8	3-1/4	1/8	6-1/8	3-3/4	0	5-5/8	4-1/2	0	4-7/8	15
KB-TZ2 3/4x4-3/4 SS304	4-3/4	G	1 3/4	4	0	1/8	-	-	-	-	-	-	10
KB-TZ2 3/4x5-1/2 SS304	5-1/2	I	2 1/2	4	0	7/8	4-1/2	0	3/8	-	-	-	10
KB-TZ2 3/4x6-1/4 SS304	6-1/4	J	3 1/4	4	0	1-5/8	4-1/2	0	1-1/8	5-1/2	0	1/8	10
KB-TZ2 3/4x7 SS304	7	L	4	4	0	2-3/8	4-1/2	0	1-7/8	5-1/2	0	7/8	10
KB-TZ2 3/4x8 SS304	8	N	5	4	0	3-3/8	4-1/2	0	2-7/8	5-1/2	0	1-7/8	10
KB-TZ2 3/4x9 SS304	9	P	6	4	0	4-3/8	4-1/2	0	3-7/8	5-1/2	0	2-7/8	10
KB-TZ2 3/4x10 SS304	10	R	7	4	0	5-3/8	4-1/2	0	4-7/8	5-1/2	0	3-7/8	10
KB-TZ2 3/4x12 SS304	12	T	7	4	1-5/8	7-3/8	4-1/2	1-1/8	6-7/8	5-1/2	1/8	5-7/8	10
KB-TZ2 1x6-1/2 SS304	6-1/2	K	2 1/2	4-5/8	0	7/8	6-3/8	-	-	-	-	-	10
KB-TZ2 1x8 SS304	8	N	3 7/8	4-5/8	0	2-3/8	6-3/8	0	7/8	-	-	-	10
KB-TZ2 1x9 SS304	9	P	3 7/8	4-5/8	1	3-3/8	6-3/8	0	1-7/8	-	-	-	10
KB-TZ2 1x10-1/2 SS304	10-1/2	R	6	4 5/8	1/2	4-7/8	6-3/8	0	3-3/8	-	-	-	10
KB-TZ2 1x12 SS304	12	T	6	4 5/8	2	6-3/8	6-3/8	1/4	4-7/8	-	-	-	10

Table 54 — Hilti KB-TZ2 SS316 product portfolio

Description	Length (in)	Length ident. letter	Thread length (in)	Nominal embed. 1 (in)	Min. fixture thickness 1 (in)	Max. fixture thickness 1 (in)	Nominal embed. 2 (in)	Min. fixture thickness 2 (in)	Max. fixture thickness 2 (in)	Nominal embed. 3 (in)	Min. fixture thickness 3 (in)	Max. fixture thickness 3 (in)	Package quantity
KB-TZ2 1/4x2-1/2 SS316	2-1/2	C	1-1/4	1-3/4	0	1/2	-	-	-	-	-	-	100
KB-TZ2 1/4x3-1/4 SS316	3-1/4	D	2	1-3/4	0	1-1/4	-	-	-	-	-	-	100
KB-TZ2 1/4x4-1/2 SS316	4-1/2	G	3	1-3/4	1/8	2-1/2	-	-	-	-	-	-	100
KB-TZ2 3/8x2-1/2 SS316	2-1/2	C	1	1-7/8	0	1/4	-	-	-	-	-	-	50
KB-TZ2 3/8x3 SS316	3	D	1-1/2	1-7/8	0	3/4	2-1/2	0	1/4	-	-	-	50
KB-TZ2 3/8x3-1/2 SS316	3-1/2	Ω	2	1-7/8	0	1-1/4	2-1/2	0	3/4	3	0	1/4	50
KB-TZ2 3/8x3-3/4 SS316	3-3/4	E	2-1/4	1-7/8	0	1-1/2	2-1/2	0	1	3	0	1/2	50
KB-TZ2 3/8x5 SS316	5	H	3-1/2	1-7/8	0	2-3/4	2-1/2	0	2-1/4	3	0	1-3/4	50
KB-TZ2 3/8x7 SS316	7	L	4-7/8	1-7/8	1/2	4-3/4	2-1/2	0	4-1/4	3	0	3-3/4	50
KB-TZ2 1/2x3-3/4 SS316	3-3/4	E	1-5/8	2-1/2	0	3/4	3	0	1/4	-	-	-	20
KB-TZ2 1/2x4-1/2 SS316	4-1/2	G	2-3/8	2-1/2	0	1-1/2	3	0	1	3-3/4	0	1/4	20
KB-TZ2 1/2x5-1/2 SS316	5-1/2	I	3-3/8	2-1/2	0	2-1/2	3	0	2	3-3/4	0	1-1/4	20
KB-TZ2 1/2x7 SS316	7	L	4-3/4	2-1/2	1/8	4	3	0	3-1/2	3-3/4	0	2-3/4	20
KB-TZ2 1/2x8-1/2 SS316	8-1/2	O	4-7/8	2-1/2	1-1/2	5-1/2	3	1	5	3-3/4	1/4	4-1/4	20
KB-TZ2 1/2x10 SS316	10	R	4-7/8	2-1/2	3	7	3	2-1/2	6-1/2	3-3/4	1-3/4	5-3/4	20
KB-TZ2 5/8x4-1/4 SS316	4-1/4	F	2-1/4	3-1/4	0	3/8	-	-	-	-	-	-	15
KB-TZ2 5/8x4-3/4 SS316	4-3/4	G	2-3/4	3-1/4	0	7/8	3-3/4	0	3/8	-	-	-	15
KB-TZ2 5/8x6 SS316	6	J	4	3-1/4	0	2-1/8	3-3/4	0	1-5/8	4-1/2	0	7/8	15
KB-TZ2 5/8x7 SS316	7	L	4-7/8	3-1/4	0	3-1/8	3-3/4	0	2-5/8	4-1/2	0	1-7/8	15
KB-TZ2 5/8x8-1/2 SS316	8-1/2	O	6-1/2	3-1/4	0	4-5/8	3-3/4	0	4-1/8	4-1/2	0	3-3/8	15
KB-TZ2 5/8x10 SS316	10	R	7-1/8	3-1/4	1/8	6-1/8	3-3/4	0	5-5/8	4-1/2	0	4-7/8	15
KB-TZ2 3/4x4-3/4 SS316	4-3/4	G	1-3/4	4	0	1/8	-	-	-	-	-	-	10
KB-TZ2 3/4x5-1/2 SS316	5-1/2	I	2-1/2	4	0	7/8	4-1/2	0	3/8	-	-	-	10
KB-TZ2 3/4x6-1/4 SS316	6-1/4	J	3-1/4	4	0	1-5/8	4-1/2	0	1-1/8	5-1/2	0	1/8	10
KB-TZ2 3/4x7 SS316	7	L	4	4	0	2-3/8	4-1/2	0	1-7/8	5-1/2	0	7/8	10
KB-TZ2 3/4x8 SS316	8	N	5	4	0	3-3/8	4-1/2	0	2-7/8	5-1/2	0	1-7/8	10
KB-TZ2 3/4x9 SS316	9	P	6	4	0	4-3/8	4-1/2	0	3-7/8	5-1/2	0	2-7/8	10
KB-TZ2 3/4x10 SS316	10	R	7	4	0	5-3/8	4-1/2	0	4-7/8	5-1/2	0	3-7/8	10
KB-TZ2 3/4x12 SS316	12	T	7	4	1-5/8	7-3/8	4-1/2	1-1/8	6-7/8	5-1/2	1/8	5-7/8	10

Figure 9 — Anchor head with length identification code and KB-TZ2 head notch embossment

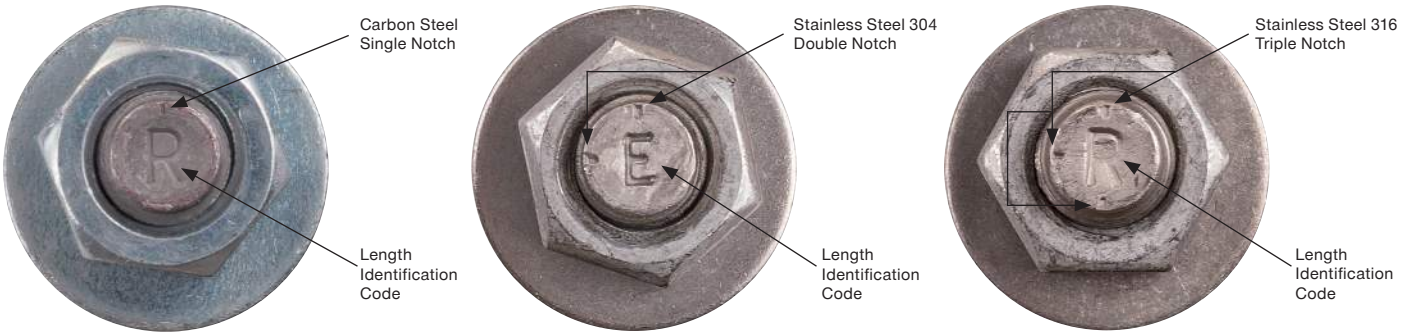

The following excerpt are pages from the North American Product Technical Guide, Volume 2: Anchor Fastening, Edition 21.

Please refer to the publication in its entirety for complete details on this product including data development, product specifications, general suitability, installation, corrosion and spacing and edge distance guidelines.
US&CA: https://submittals.us.hilti.com/PTGVol2/

To consult directly with a team member regarding our anchor fastening products, contact Hilti's team of technical support specialists between the hours of 7:00am – 6:00pm CST.
US: 877-749-6337 or HNATechnicalServices@hilti.com
CA: 1-800-363-4458, ext. 6 or CATechnicalServices@hilti.com

Hilti, Inc.
7250 Dallas Parkway, Suite 1000
Plano, TX 75024

1-800-879-8000
www.hilti.com

3.3.18 KCC-WF AND KCC-MD CAST-IN ANCHOR

PRODUCT DESCRIPTION

KCC-WF and KCC-MD cast-in anchors

Anchor System		Features and Benefits
	Internally threaded cast-in anchors for wood form construction (KCC-WF)	• Quick push-to-connect technology offers ultimate productivity • Ideal for pre-assembled / pre-fabricated hanger assemblies • KCC-WF — Color-coded foam covering protects inner threads from concrete intrusion • KCC-WF — Nails through the head helps prevent anchor from being knocked over and from head popping off due to rebar hits • KCC-MD SP and LP — Pre-assembled self-tapping screws reduce installation time • KCC-MD SP and LP — Color-coded plastic plugs protect inner threads from concrete, sprayed-on fireproofing, or sprayed-on insulation • KCC-MD LP — Pre-assembled spanner plate offers flexibility with installation at any location on the metal deck including the incline • KCC-MD LP — Anchor installs to the top of the flutes, so anchoring point is at consistent height throughout, which is ideal for pre-fabricated hangers
	Internally threaded short plate cast-in anchors for lightweight concrete over metal deck construction (KCC-MD SP)	
	Internally threaded long plate cast-in anchors for lightweight concrete over metal deck construction (KCC-MD LP)	

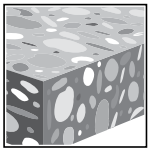

Uncracked concrete

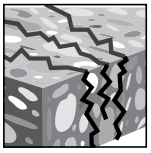

Cracked concrete

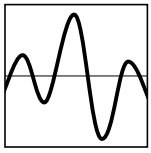

Seismic Design Categories A-F

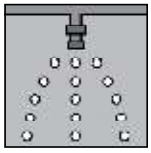

Fire sprinkler listings

Approvals/ Listings

ICC-ES (International Code Council) 2018 International Building Code / International Residential Code (IBC/IRC)	ESR-4145 in concrete per ACI 318 Ch. 17 / ICC-ES AC446
City of Los Angeles	2020 LABC Supplement (within ESR-4145)
Florida Building Code	2017 FBC with HVHZ
UL LLC (Underwriters Laboratory LLC)	Pipe Hanger Equipment for Fire Protection Services for 3/8 through 1/2 (See Table 28)
FM (Factory Mutual) Pipe	Hanger Components for Automatic Sprinkler Systems for 3/8 through 1/2 (See Table 28)

MATERIAL SPECIFICATIONS

KCC-WF and KCC-MD (short plate and long plate) have an insert body made from carbon steel with an engineered plastic flange. The insert body is zinc plated per ASTM B633 Fe/Zn 5 Type III.

INSTALLATION PARAMETERS

Table 1 — Hilti KCC-WF, KCC-MD SP and KCC-MD LP cast-in anchor installation information

Design Information	Symbol	Units	KCC-WF		KCC-MD SP		KCC-MD LP	
Insert thread	d	UNC	3/8-16	1/2-13	3/8-16	1/2-13	3/8-16	1/2-13
Plastic housing color	-	-	Dark Green	Dark Orange	Dark Green	Dark Orange	Dark Green	Dark Orange
Outside diameter of anchor steel body	d_a	in.	0.67	0.87	0.67	0.87	0.67	0.87
		(mm)	(17)	(22)	(17)	(22)	(17)	(22)
Bearing area	A_{brg}	in.^{2}	1.0	1.2	1.0	1.2	1.0	1.2
		(mm^2)	(643)	(774)	(643)	(774)	(643)	(774)
Effective embedment	h_{ef}	in.	1.63	2.04	2.00	2.50	2.00	2.50
		(mm)	(41)	(52)	(51)	(64)	(51)	(64)
Nominal embedment	h_{nom}	in.	1.76	2.17	2.13	2.63	2.21	2.71
		(mm)	(45)	(55)	(54)	(67)	(56)	(69)
Metal hole saw diameter	d_{bit}	in.	N/A	N/A	11/16	13/16	5/8	3/4
Steel head thickness	t_{sh}	mm	3.3					
Minimum member thickness — wood form installation	h_{min}	in.	2.5	3	N/A	N/A	N/A	N/A
		(mm)	(64)	(76)				
Minimum concrete cover over metal deck — all installations (see Figures 5A, 5B, 5C and 5D)	$h_{deck,min}$	in.	N/A	N/A	2.5	3.25	2.5	3.25
		(mm)			(64)	(83)	(64)	(83)
Minimum metal deck gauge	-	-	N/A		20			
Minimum anchor spacing	S_{min}	in.	2.6	3.5	6.0	7.5	6.0	7.5
		(mm)	(67)	(88)	(152)	(191)	(152)	(191)
Minimum edge distance	C_{min}	in.	1.5	1.5	6.0	7.5	6.0	7.5
		(mm)	(38)	(38)	(152)	(191)	(152)	(191)
Thread engagement length — see Figure 4	l_{th}	in.	1.6	1.9	N/A	N/A	N/A	N/A
Thread engagement length Plastic on/ Metal tube on — see Figure 4	l_{th}	in.	N/A	N/A	4.3	4.7	6.9	7.3
Thread engagement length Plastic off — see Figure 4	l_{th}	in.	N/A	N/A	2.5	2.9	N/A	N/A

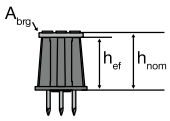

Figure 1 — KCC-WF

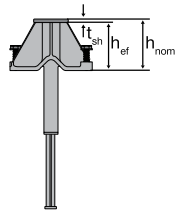

Figure 2 — KCC-MD SP

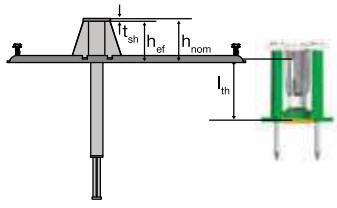

Figure 3 — KCC-MD LP

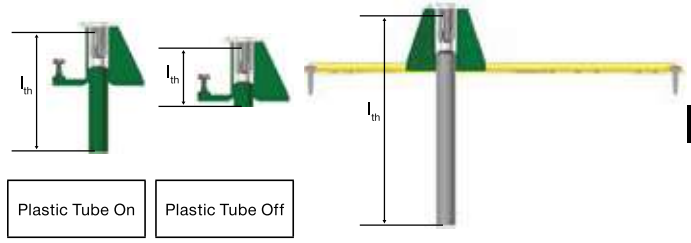

(a) KCC-WF (b) KCC-MD SP (c) KCC-MD LP (Metal Tube On)

Figure 4 — KCC Thread Engagement Measurement

3.3.18

DESIGN INFORMATION IN CONCRETE PER ACI 318

ACI 318 Chapter 17

The technical data contained in this section are Hilti Simplified Tables. The load values were developed using the Strength Design parameters and variables of ESR-4145 and the equations within ACI 318 Chapter 17. For a detailed explanation of the Hilti Simplified Design Tables, refer to section 3.1.8. Data tables from ESR-4145 are not contained in this section, but can be found at www.icc-es.org or at www.hilti.com.

Table 2 — Design strength for steel failure of KCC-WF inserts[1,2,3,4]

DESIGN INFORMATION	Symbol	Units	Insert type	
			KCC-WF	
Nominal rod diameter	-	in.	3/8	1/2
Design steel strength of insert in tension	$\phi_{Nsa,insert}$	lb (kN)	2,625 (11.7)	3,515 (15.6)
Design seismic steel strength of insert in tension	$\phi_{Nsa,insert,eq}$	lb (kN)	2,625 (11.7)	3,515 (15.6)
Design steel strength of insert in shear	$\phi_{Vsa,insert}$	lb (kN)	3,220 (14.3)	3,340 (14.9)
Design seismic steel strength of insert in shear	$\phi_{Vsa,insert}$	lb (kN)	3,220 (14.3)	3,340 (14.9)

1 See Section 3.1.8.6 to convert design strength value to ASD value.
2 Hilti KCC-WF Inserts are considered brittle steel elements
3 Values are for the insert only. The capacity of the threaded rod must be also be determined from Table 16. The design strength of concrete must be in accordance with ACI 318 Chapter 17 and Tables 3 to 4 as necessary. Compare the values (threaded rod, inserts, and concrete). The lesser of the values is to be used for the design.
4 Only threaded rods ASTM A193 Grade B7, ASTM A325, or ASTM F1554 Grade 105 are allowed to be used for applocations resisting shear, seismic shear or seismic tension loads.

Table 3 — Hilti KCC-WF cast-in insert design strength with concrete / pullout failure in uncracked concrete [1,2,3,4,5,6]

Nominal anchor internal diameter	Effective embedment depth in. (mm)	Tension - ΦN_n				Shear - ΦV_n			
		f'_c = 2,500 psi (17.2 MPa) lb (kN)	f'_c = 3,000 psi (20.7 MPa) lb (kN)	f'_c = 4,000 psi (27.6 MPa) lb (kN)	f'_c = 6,000 psi (41.1 MPa) lb (kN)	f'_c = 2,500 psi (17.2 MPa) lb (kN)	f'_c = 3,000 psi (20.7 MPa) lb (kN)	f'_c = 4,000 psi (27.6 MPa) lb (kN)	f'_c = 6,000 psi (41.1 MPa) lb (kN)
3/8"	1.63 (41)	2,185 (9.7)	2,390 (10.6)	2,760 (12.3)	3,385 (15.1)	2,185 (9.7)	2,390 (10.6)	2,760 (12.3)	3,385 (15.1)
1/2"	2.04 (52)	3,055 (13.6)	3,350 (14.9)	3,865 (17.2)	4,735 (21.1)	3,055 (13.6)	3,350 (14.9)	3,865 (17.2)	4,735 (21.1)

Table 4 — Hilti KCC-WF cast-in insert design strength with concrete / pullout failure in cracked concrete [1,2,3,4,5,6]

Nominal anchor internal diameter	Effective embedment depth in. (mm)	Tension - ΦN_n				Shear - ΦV_n			
		f'_c = 2,500 psi (17.2 MPa) lb (kN)	f'_c = 3,000 psi (20.7 MPa) lb (kN)	f'_c = 4,000 psi (27.6 MPa) lb (kN)	f'_c = 6,000 psi (41.1 MPa) lb (kN)	f'_c = 2,500 psi (17.2 MPa) lb (kN)	f'_c = 3,000 psi (20.7 MPa) lb (kN)	f'_c = 4,000 psi (27.6 MPa) lb (kN)	f'_c = 6,000 psi (41.1 MPa) lb (kN)
3/8"	1.63 (41)	1,745 (7.8)	1,910 (8.5)	2,210 (9.8)	2,705 (12.0)	1,745 (7.8)	1,910 (8.5)	2,210 (9.8)	2,705 (12.0)
1/2"	2.04 (52)	2,445 (10.9)	2,680 (11.9)	3,095 (13.8)	3,790 (16.9)	2,445 (10.9)	2,680 (11.9)	3,095 (13.8)	3,790 (16.9)

1 See Section 3.1.8.6 to convert design strength value to ASD value.
2 Linear interpolation between concrete compressive strengths is not permitted.
3 Tabular values are for single anchors located at edge distance (c) and spacing (s) greater than $3h_{ef}$. For anchors with edge distance or spacing less than $3h_{ef}$ use ACI 318 to calculate load reduction factor. Compare the calculated value to the steel values (threaded rod and inserts) in Tables 16 and 2. The lesser of the values is to be used for the design.
4 Tabular values are for normal weight concrete only. For lightweight concrete multiply design strength by λ_a as follows:
For sand-lightweight, λ_a = 0.85. For all-lightweight, λ_a = 0.75.
5 Tabular values are for static loads only. Seismic design is not permitted for uncracked concrete. For seismic tension loads, multiply cracked concrete tabular values in tension by $\alpha_{N,seis}$ = 0.75. No reduction needed for seismic shear.
6 Compare tabular value to the insert steel strength values in Table 2 and threaded rod steel strength values in Table 16 The lesser of the values is to be used for the design.

Table 5 — Load adjustment factors for KCC-WF 3/8” in uncracked concrete [1,2]

KCC-WF 3/8" uncracked concrete			Spacing factor in tension f_{AN}	Edge distance factor in tension f_{RN}	Spacing factor in shear [3] f_{AV}	Edge distance in shear ⊥ Toward edge f_{RV}	Edge distance in shear ∥ To edge f_{RV}	Concrete thickness factor in shear [4] f_{HV}
Embedment h_{ef}		in	1.63	1.63	1.63	1.63	1.63	1.63
		(mm)	(41)	(41)	(41)	(41)	(41)	(41)
Min. conc. thickness h_{min} (in.)			2-1/2	2-1/2	2-1/2	2-1/2	2-1/2	2-1/2
Spacing (s) / Edge Distance (c_a) / Concrete Thickness (h) - in. (mm)	1-1/2	(38)	n/a	0.713	n/a	0.282	0.564	n/a
	2	(51)	n/a	0.859	n/a	0.434	0.859	n/a
	2-1/2	(64)	n/a	1.000	n/a	0.607	1.000	0.691
	2-5/8	(67)	0.768		0.625	0.653		0.708
	3	(76)	0.807		0.643	0.798		0.757
	3-1/2	(89)	0.858		0.667	1.000		0.818
	4	(102)	0.909		0.691			0.874
	4-1/2	(114)	0.960		0.715			0.927
	5	(127)	1.000		0.739			0.978
	5-1/2	(140)			0.763			1.000
	6	(152)			0.787			
	7	(178)			0.834			
	8	(203)			0.882			
	10	(254)			0.978			
	12	(305)			1.000			

Table 6 — Load adjustment factors for KCC-WF 3/8” in cracked concrete [1,2]

KCM-WF 1/4”-3/8” cracked concrete			Spacing factor in tension f_{AN}	Edge distance factor in tension f_{RN}	Spacing factor in shear [3] f_{AV}	Edge distance in shear ⊥ Toward edge f_{RV}	Edge distance in shear ∥ To edge f_{RV}	Concrete thickness factor in shear [4] f_{HV}
Embedment h_{ef}		in	1.63	1.63	1.63	1.63	1.63	1.63
		(mm)	(41)	(41)	(41)	(41)	(41)	(41)
Min. conc. thickness h_{min} (in.)			2-1/2	2-1/2	2-1/2	2-1/2	2-1/2	2-1/2
Spacing (s) / Edge Distance (c_a) / Concrete Thickness (h) - in. (mm)	1-1/2	(38)	n/a	0.713	n/a	0.252	0.504	n/a
	2	(51)	n/a	0.859	n/a	0.388	0.775	n/a
	2-1/2	(64)	n/a	1.000	n/a	0.542	1.000	0.666
	2-5/8	(67)	0.768		0.616	0.583		0.682
	3	(76)	0.807		0.633	0.712		0.729
	3-1/2	(89)	0.858		0.655	0.897		0.788
	4	(102)	0.909		0.677	1.000		0.842
	4-1/2	(114)	0.960		0.699			0.893
	5	(127)	1.000		0.722			0.941
	5-1/2	(140)			0.744			0.987
	6	(152)			0.766			1.000
	7	(178)			0.810			
	8	(203)			0.854			
	10	(254)			0.943			
	12	(305)			1.000			

1 Linear interpolation not permitted
2 When combining multiple load adjustment factors (e.g. for a 4 anchor pattern in a corner with thin concrete member) the design can become very conservative. To optimize the design, use PROFIS Engineering or perform anchor calculation using design equations from ACI 318 Chapter 17 (or CSA A23.3 (R2014) Annex D).
3 Spacing factor reduction in shear, f_{AV}, assumes an influence of a nearby edge. If no edge exists, then $f_{AV} = f_{AN}$.
4 Concrete thickness reduction factor in shear, f_{HV}, assumes an influence of a nearby edge. If no edge exists, then f_{HV} = 1.0.

Table 7 — Load adjustment factors for KCC-WF 1/2” in uncracked concrete [1,2]

KCM-WF 1/2” uncracked concrete			Spacing factor in tension f_{AN}	Edge distance factor in tension f_{RN}	Spacing factor in shear [3] f_{AV}	Edge distance in shear ⊥ Toward edge f_{RV}	Edge distance in shear ∥ To edge f_{RV}	Concrete thickness factor in shear [4] f_{HV}
Embedment h_{ef}		in (mm)	2.04 (52)	2.04 (52)	2.04 (52)	2.04 (52)	2.04 (52)	2.04 (52)
Spacing (s) / Edge Distance (c_a) / Concrete Thickness (h) - in. (mm)	1-1/2	(38)	n/a	0.631	n/a	0.281	0.561	n/a
	2	(51)	n/a	0.741	n/a	0.432	0.741	n/a
	2-1/2	(64)	n/a	0.859	n/a	0.604	0.859	n/a
	3	(76)	n/a	0.984	n/a	0.794	0.984	0.756
	3-1/2	(89)	0.786	1.000	0.667	1.000	1.000	0.817
	4	(102)	0.827		0.691			0.873
	4-1/2	(114)	0.868		0.714			0.926
	5	(127)	0.908		0.738			0.976
	5-1/2	(140)	0.949		0.762			1.000
	5-3/4	(146)	0.970		0.774			
	6	(152)	0.990		0.786			
	7	(178)	1.000		0.833			
	8	(203)			0.881			
	9	(229)			0.929			
	10	(254)			0.976			
	12	(305)			1.000			

Table 8 — Load adjustment factors for KCC-WF 1/2” in cracked concrete [1,2]

KCM-WF 3/8”-1/2” cracked concrete			Spacing factor in tension f_{AN}	Edge distance factor in tension f_{RN}	Spacing factor in shear [3] f_{AV}	Edge distance in shear ⊥ Toward edge f_{RV}	Edge distance in shear ∥ To edge f_{RV}	Concrete thickness factor in shear [4] f_{HV}
Embedment h_{ef}		in (mm)	2.04 (52)	2.04 (52)	2.04 (52)	2.04 (52)	2.04 (52)	2.04 (52)
Spacing (s) / Edge Distance (c_a) / Concrete Thickness (h) - in. (mm)	1-1/2	(38)	n/a	0.631	n/a	0.251	0.501	n/a
	2	(51)	n/a	0.741	n/a	0.386	0.741	n/a
	2-1/2	(64)	n/a	0.859	n/a	0.539	0.859	n/a
	3	(76)	n/a	0.984	n/a	0.709	0.984	0.728
	3-1/2	(89)	0.786	1.000	0.655	0.893	1.000	0.786
	4	(102)	0.827		0.677	1.000		0.841
	4-1/2	(114)	0.868		0.699			0.892
	5	(127)	0.908		0.721			0.940
	5-1/2	(140)	0.949		0.743			0.986
	5-3/4	(146)	0.970		0.754			1.000
	6	(152)	0.990		0.765			
	7	(178)	1.000		0.809			
	8	(203)			0.853			
	9	(229)			0.898			
	10	(254)			0.942			
	12	(305)			1.000			

1 Linear interpolation not permitted
2 When combining multiple load adjustment factors (e.g. for a 4 anchor pattern in a corner with thin concrete member) the design can become very conservative. To optimize the design, use PROFIS Engineering or perform anchor calculation using design equations from ACI 318 Chapter 17 (or CSA A23.3 (R2014) Annex D).
3 Spacing factor reduction in shear, f_{AV}, assumes an influence of a nearby edge. If no edge exists, then $f_{AV} = f_{AN}$.
4 Concrete thickness reduction factor in shear, f_{HV}, assumes an influence of a nearby edge. If no edge exists, then f_{HV} = 1.0.

Table 9 — Design strength for steel failure of KCC-MD Short Plate and Long Plate inserts [1,2,3,4,5]

Design information	Symbol	Units	Insert Type			
			SP 3/8”	SP 1/2”	LP 3/8”	LP 1/2”
Nominal rod diameter		in.	3/8	1/2	3/8	1/2
Design steel strength of insert in tension	$\phi N_{sa,insert}$	lb	2,625	3,515	2,625	3,515
		(kN)	(11.7)	(15.6)	(11.7)	(15.6)
Design seismic steel strength of insert in tension	$\phi N_{sa,insert,eq}$	lb	2,625	3,515	2,625	3,515
		(kN)	(11.7)	(15.6)	(11.7)	(15.6)
Installations in upper flute of metal deck (i.e. W-deck and B-deck) according to Figure 5A						
Design steel strength of insert in shear	$\phi_{Vsa,insert}$	lb	3,045	3,615	3,045	3,615
		(kN)	(13.6)	(16.1)	(13.6)	(16.1)
Design seismic steel strength of insert in shear	$\phi V_{sa,insert,eq}$	lb	3,045	5,735	3,045	5,735
		(kN)	(13.6)	(25.5)	(13.6)	(25.5)
Installations in lower flute of metal deck (i.e. W-deck) according to Figure 5B						
Design steel strength of insert in shear	$\phi V_{sa,insert}$	lb	2,235	2,720	3,220	3,615
		(kN)	(9.9)	(12.1)	(14.3)	(16.1)
Design seismic steel strength of insert in shear	$\phi V_{sa,insert,eq}$	lb	2,235	2,720	3,220	3,615
		(kN)	(9.9)	(12.1)	(14.3)	(16.1)
Installations in lower flute of metal deck (i.e. B-deck) according to Figure 5C						
Design steel strength of insert in shear	$\phi V_{sa,insert}$	lb	2,050	2,380	3,130	3,615
		(kN)	(9.1)	(11)	(13.9)	(16.1)
Design seismic steel strength of insert in shear	$\phi V_{sa,insert,eq}$	lb	2,050	2,380	3,130	3,615
		(kN)	(9.1)	(11)	(13.9)	(16.1)
Installations over flute incline of metal deck (i.e. W-deck) according to Figure 5D						
Design steel strength of insert in shear	$\phi V_{sa,insert}$	lb	N/A		1,120	2,890
		(kN)			(5.0)	(12.9)
Design seismic steel strength of insert in shear	$\phi V_{sa,insert,eq}$	lb			1,120	2,310
		(kN)			(5.0)	(10.3)

1 See Section 3.1.8.6 to convert design strength value to ASD value.
2 Hilti KCC-MD Inserts are considered brittle steel elements
3 Tension values are for the inserts only. The capacity of the threaded rods must be also determined from Table 16. The design strength of concrete must be obtained from tables 10 to 15. Compare the tension values of threaded rod, inserts, and concrete. The lesser of the values is to be used for the design.
4 Shear values are for the inserts only. The capacity of the threaded rods must be also determined from Table 16. The calculation of concrete shear strength is not required. Compare the shear values of threaded rod and inserts. The lesser of the values is to be used for the design strength of the anchor in shear.
5 Only threaded rod ASTM A193 Grade B7, ASTM A325, or ASTM F1554 Grade 105 is permitted to be used for the applications resisting shear, seismic shear, or seismic tension loads.

Table 10 — Hilti KCC Short Plate and Long Plate tension design strength in the soffit of uncracked sand-lightweight concrete over metal deck (B profile) [1,2,3,4,5,6,7,8]

Anchor	Nominal Embed. Depth in. (mm)	Upper flute per Figure 4A		Lower flute per Figure 4C	
		Tension - ΦN_n		Tension - ΦN_n	
		f'_c = 3,000 psi (20.7 MPa) lb (kN)	f'_c = 4,000 psi (27.6 MPa) lb (kN)	f'_c = 3,000 psi (20.7 MPa) lb (kN)	f'_c = 4,000 psi (27.6 MPa) lb (kN)
SP 3/8”	2.13 (54)	3,610 (16.1)	4,170 (18.5)	635 (2.8)	735 (3.3)
SP 1/2”	2.63 (67)	4,580 (20.4)	5,290 (23.5)	695 (3.1)	805 (3.6)
LP 3/8”	2.21 (56)	3,610 (16.1)	4,170 (18.5)	3,610 (16.1)	4,170 (18.5)
LP 1/2”	2.71 (69)	4,580 (20.4)	5,290 (23.5)	4,580 (20.4)	5,290 (23.5)

Table 11 — Hilti KCC-MD Short Plate and Long Plate tension design strength in the soffit of cracked sand-lightweight concrete over metal deck (B profile) [1,2,3,4,5,6,7,8]

Anchor	Nominal Embed. Depth in. (mm)	Upper flute per Figure 4A		Lower flute per Figure 4C	
		Tension - ΦN_n		Tension - ΦN_n	
		f'_c = 3,000 psi (20.7 MPa) lb (kN)	f'_c = 4,000 psi (27.6 MPa) lb (kN)	f'_c = 3,000 psi (20.7 MPa) lb (kN)	f'_c = 4,000 psi (27.6 MPa) lb (kN)
SP 3/8”	2.13 (54)	2,890 (12.9)	3,335 (14.8)	505 (2.2)	585 (2.6)
SP 1/2”	2.63 (67)	3,660 (16.3)	4,225 (18.8)	555 (2.5)	640 (2.8)
LP 3/8”	2.21 (56)	2,890 (12.9)	3,335 (14.8)	2,890 (12.9)	3,335 (14.8)
LP 1/2”	2.71 (69)	3,660 (16.3)	4,225 (18.8)	3,660 (16.3)	4,225 (18.8)

1 See Section 3.1.8.6 to convert design strength value to ASD value.
2 Linear interpolation between concrete compressive strengths is not permitted.
3 Tabular value is for one anchor per flute. Minimum spacing along the length of the flute is 3 x hef (effective embedment).
4 Tabular values are for normal weight or sand-light weight concrete.
5 No additional reduction factors for spacing or edge distance need to be applied.
6 Compare tabular value to the insert steel strength values in Table 9 and threaded rod steel strength values in Table 16. The lesser of the values is to be used for the design.
7 Tabular values are for static loads only. For seismic tension loads, multiply cracked concrete tabular values in tension by $\alpha_{N,seis}$ = 0.75. See PTG ED.19, Section 3.1.8.7 for additional information on seismic applications.
8 For Hilti KCC-MD anchors, calculation of static and seismic concrete strength in shear is not required. See Table 9 for shear calculations.

Table 12 — Hilti KCC-MD Short Plate and Long Plate tension design strength in the soffit of uncracked sand-lightweight concrete over metal deck (W profile with 3-7/8” width) [1,2,3,4,5,6,7,8]

Anchor	Nominal Embed. Depth in. (mm)	Upper flute per Figure 5A		Lower flute per Figure 5B		Inclined per Figure 5D	
		Tension - ΦN_n		Tension - ΦN_n		Tension - ΦN_n	
		f'_c = 3,000 psi (20.7 MPa) lb (kN)	f'_c = 4,000 psi (27.6 MPa) lb (kN)	f'_c = 3,000 psi (20.7 MPa) lb (kN)	f'_c = 4,000 psi (27.6 MPa) lb (kN)	f'_c = 3,000 psi (20.7 MPa) lb (kN)	f'_c = 4,000 psi (27.6 MPa) lb (kN)
SP 3/8”	2.13 (54)	3,610 (16.1)	4,170 (18.5)	1,850 (8.2)	2,135 (9.5)	-	-
SP 1/2”	2.63 (67)	4,580 (20.4)	5,290 (23.5)	2,120 (9.4)	2,450 (10.9)	-	-
LP 3/8”	2.21 (56)	3,610 (16.1)	4,170 (18.5)	4,895 (21.8)	5,650 (25.1)	3,610 (16.1)	4,170 (18.5)
LP 1/2”	2.71 (69)	4,580 (20.4)	5,290 (23.5)	6,565 (29.2)	7,580 (33.7)	4,580 (20.4)	5,290 (23.5)

Table 13 — Hilti KCC-MD Short Plate and Long Plate tension design strength in the soffit of cracked sand-lightweight concrete over metal deck (W profile with 3-7/8” width) [1,2,3,4,5,6,7,8]

Anchor	Nominal Embed. Depth in. (mm)	Upper flute per Figure 5A		Lower flute per Figure 5B		Inclined per Figure 5D	
		Tension - ΦN_n		Tension - ΦN_n		Tension - ΦN_n	
		f'_c = 3,000 psi (20.7 MPa) lb (kN)	f'_c = 4,000 psi (27.6 MPa) lb (kN)	f'_c = 3,000 psi (20.7 MPa) lb (kN)	f'_c = 4,000 psi (27.6 MPa) lb (kN)	f'_c = 3,000 psi (20.7 MPa) lb (kN)	f'_c = 4,000 psi (27.6 MPa) lb (kN)
SP 3/8”	2.13 (54)	2,890 (12.9)	3,335 (14.8)	1,480 (6.6)	1,710 (7.6)	-	-
SP 1/2”	2.63 (67)	3,660 (16.3)	4,225 (18.8)	1,695 (7.5)	1,955 (8.7)	-	-
LP 3/8”	2.21 (56)	2,890 (12.9)	3,335 (14.8)	3,915 (17.4)	4,520 (20.1)	2,890 (12.9)	3,335 (14.8)
LP 1/2”	2.71 (69)	3,660 (16.3)	4,225 (18.8)	5,250 (23.4)	6,060 (27.0)	3,660 (16.3)	4,225 (18.8)

1 See Section 3.1.8.6 to convert design strength value to ASD value.
2 Linear interpolation between concrete compressive strengths is not permitted.
3 Tabular value is for one anchor per flute. Minimum spacing along the length of the flute is 3 x h_{ef} (effective embedment).
4 Tabular values are for normal weight or sand-light weight concrete.
5 No additional reduction factors for spacing or edge distance need to be applied.
6 Compare tabular value to the insert steel strength values in Table 9 and threaded rod steel strength values in Table 16. The lesser of the values is to be used for the design.
7 Tabular values are for static loads only. For seismic tension loads, multiply cracked concrete tabular values in tension by $\alpha_{N,seis}$ = 0.75. See PTG ED.19, Section 3.1.8.7 for additional information on seismic applications.
8 For Hilti KCC-MD anchors, calculation of static and seismic concrete strength in shear is not required. See Table 9 for shear calculations.

Table 14 — Hilti KCC-MD Short Plate and Long Plate tension design strength in the soffit of uncracked sand-lightweight concrete over metal deck (W profile with 4-1/2" width) [1,2,3,4,5,6,7,8]

Anchor	Nominal Embed. Depth in. (mm)	Upper flute per Figure 5A		Lower flute per Figure 5B		Inclined per Figure 5D	
		Tension - ΦN_n		Tension - ΦN_n		Tension - ΦN_n	
		f'_c = 3,000 psi (20.7 MPa) lb (kN)	f'_c = 4,000 psi (27.6 MPa) lb (kN)	f'_c = 3,000 psi (20.7 MPa) lb (kN)	f'_c = 4,000 psi (27.6 MPa) lb (kN)	f'_c = 3,000 psi (20.7 MPa) lb (kN)	f'_c = 4,000 psi (27.6 MPa) lb (kN)
SP 3/8"	2.13 (54)	3,610 (16.1)	4,170 (18.5)	1,850 (8.2)	2,135 (9.5)	-	-
SP 1/2"	2.63 (67)	4,580 (20.4)	5,290 (23.5)	2,120 (9.4)	2,450 (10.9)	-	-
LP 3/8"	2.21 (56)	3,610 (16.1)	4,170 (18.5)	4,895 (21.8)	5,650 (25.1)	3,610 (16.1)	4,170 (18.5)
LP 1/2"	2.71 (69)	4,580 (20.4)	5,290 (23.5)	6,565 (29.2)	7,580 (33.7)	4,580 (20.4)	5,290 (23.5)

Table 15 — Hilti KCC-MD Short Plate and Long Plate tension design strength in the soffit of cracked sand-lightweight concrete over metal deck (W profile with 4-1/2" width) [1,2,3,4,5,6,7,8]

Anchor	Nominal Embed. Depth in. (mm)	Upper flute per Figure 5A		Lower flute per Figure 5B		Inclined per Figure 5D	
		Tension - ΦN_n		Tension - ΦN_n		Tension - ΦN_n	
		f'_c = 3,000 psi (20.7 MPa) lb (kN)	f'_c = 4,000 psi (27.6 MPa) lb (kN)	f'_c = 3,000 psi (20.7 MPa) lb (kN)	f'_c = 4,000 psi (27.6 MPa) lb (kN)	f'_c = 3,000 psi (20.7 MPa) lb (kN)	f'_c = 4,000 psi (27.6 MPa) lb (kN)
SP 3/8"	2.13 (54)	2,890 (12.9)	3,335 (14.8)	1,480 (6.6)	1,710 (7.6)	-	-
SP 1/2"	2.63 (67)	3,660 (16.3)	4,225 (18.8)	1,695 (7.5)	1,955 (8.7)	-	-
LP 3/8"	2.21 (56)	2,890 (12.9)	3,335 (14.8)	3,915 (17.4)	4,520 (20.1)	2,890 (12.9)	3,335 (14.8)
LP 1/2"	2.71 (69)	3,660 (16.3)	4,225 (18.8)	5,250 (23.4)	6,060 (27.0)	3,660 (16.3)	4,225 (18.8)

1 See Section 3.1.8.6 to convert design strength value to ASD value.
2 Linear interpolation between concrete compressive strengths is not permitted.
3 Tabular value is for one anchor per flute. Minimum spacing along the length of the flute is 3 x h_{ef} (effective embedment).
4 Tabular values are for normal weight or sand-light weight concrete.
5 No additional reduction factors for spacing or edge distance need to be applied.
6 Compare tabular value to the insert steel strength values in Table 9 and threaded rod steel strength values in Table 16. The lesser of the values is to be used for the design.
7 Tabular values are for static loads only. For seismic tension loads, multiply cracked concrete tabular values in tension by $\alpha_{N,seis}$ = 0.75. See PTG ED.19, Section 3.1.8.7 for additional information on seismic applications.
8 For Hilti KCC-MD anchors, calculation of static and seismic concrete strength in shear is not required. See Table 9 for shear calculations.

Table 16 — Design strength for steel failure of common threaded rods [1,5]

Nominal anchor diameter	Grade A36 threaded rod			ASTM A 193 B7 or ASTM F1554 Gr. 105 threaded rod			ASTM A 307, Grade A threaded rod		
	Tensile[2] $\phi N_{sa,rod}$ or $\phi N_{sa,eq,rod}$ lb (kN)	Shear[3] $\phi V_{sa,rod}$ lb (kN)	Seismic Shear[4] $\phi V_{sa,eq,rod}$ lb (kN)	Tensile[2] $\phi N_{sa,rod}$ or $\phi N_{sa,eq,rod}$ lb (kN)	Shear[3] $\phi V_{sa,rod}$ lb (kN)	Seismic Shear[4] $\phi V_{sa,eq,rod}$ lb (kN)	Tensile[2] $\phi N_{sa,rod}$ or $\phi N_{sa,eq,rod}$ lb (kN)	Shear[3] $\phi V_{sa,rod}$ lb (kN)	Seismic Shear[4] $\phi V_{sa,eq,rod}$ lb (kN)
3/8	3,395 (15.1)	1,750 (7.8)	1,225 (5.4)	7,315 (32.5)	3,780 (16.8)	2,646 (11.8)	3,490 (15.5)	1,815 (8.1)	1,271 (5.7)
1/2	6,175 (27.5)	3,210 (14.3)	2,245 (10.0)	13,315 (59.2)	6,915 (30.8)	4,841 (21.5)	6,375 (28.4)	3,315 (14.7)	2,321 (10.3)

1 See PTG Ed. 19, Section 3.1.8.7 for additional information on seismic applications.
2 Tensile values determined by static tension tests with $\phi N_{sa} = \phi A_{se,N} f_{uta}$ as noted in ACI 318 Chapter 17.
3 Shear values determined by static shear tests with $\phi V_{sa} = \phi 0.60 A_{se,V} f_{uta}$ as noted in ACI 318 Chapter 17.
4 Seismic shear values determined by seismic shear tests with $\phi Vsa \leq \phi 0.60 A_{se,V} f_{uta}$ as noted in ACI 318, Chapter 17.
5 Values are for the threaded rod only. The capacity of the insert must be also be determined from Tables 2 and 9. The design strength of concrete must be in accordance with ACI 318 Chapter 17 and Tables 10 to 15 as necessary. Compare the values (threaded rod, inserts, and concrete). The lesser of the values is to be used for the design.

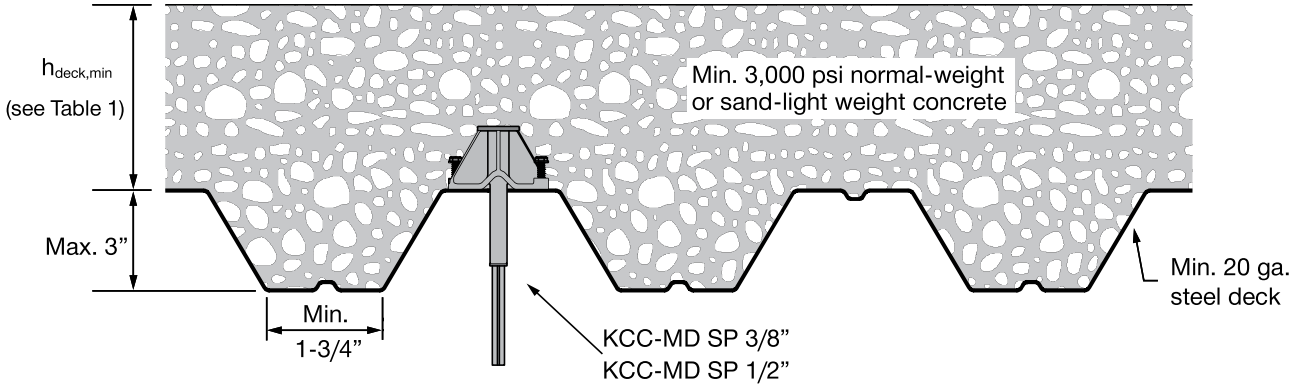

Figure 5A — Installation of KCC-MD inserts in the soffit of concrete filled metal deck floor and roof assemblies-over upper flute (B-deck and W-deck)

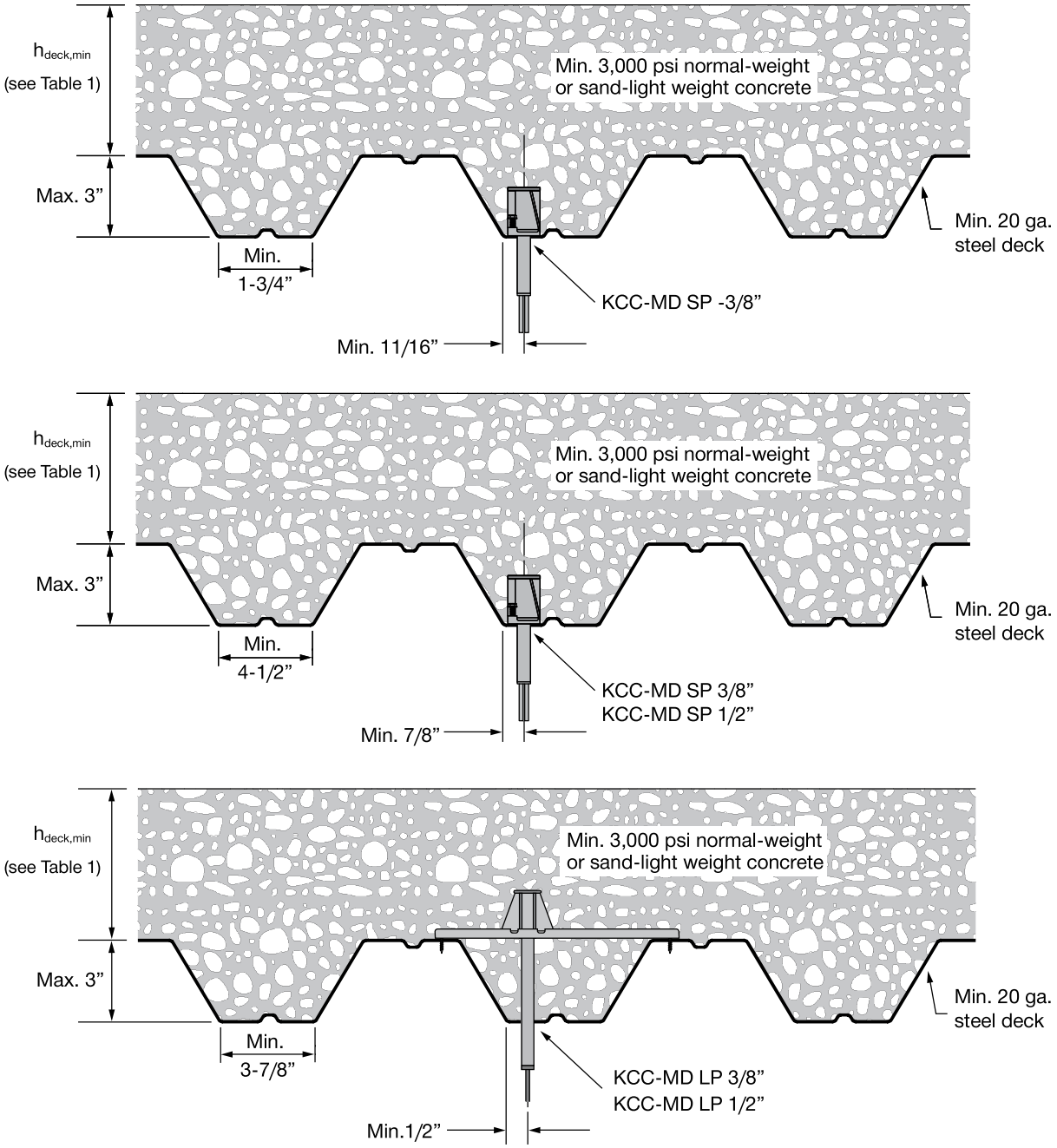

Figure 5B —Installation of KCC-MD inserts in the soffit of concrete filled metal deck floor and roof assemblies-over lower flute (W-deck)

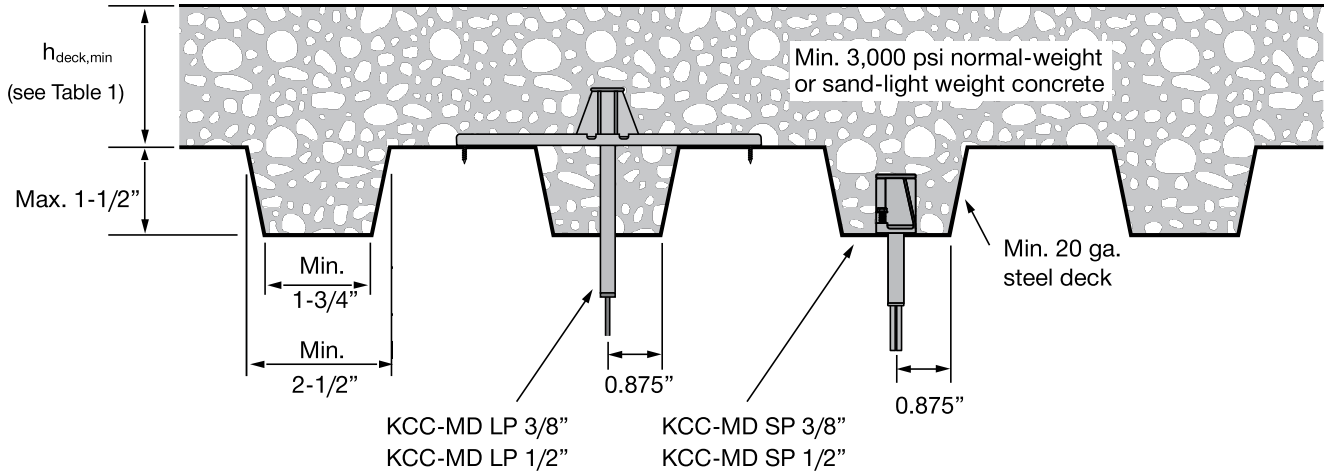

Figure 5C — Installation of KCC-MD inserts in the soffit of concrete filled metal deck floor and roof assemblies-over lower flute (B-deck)

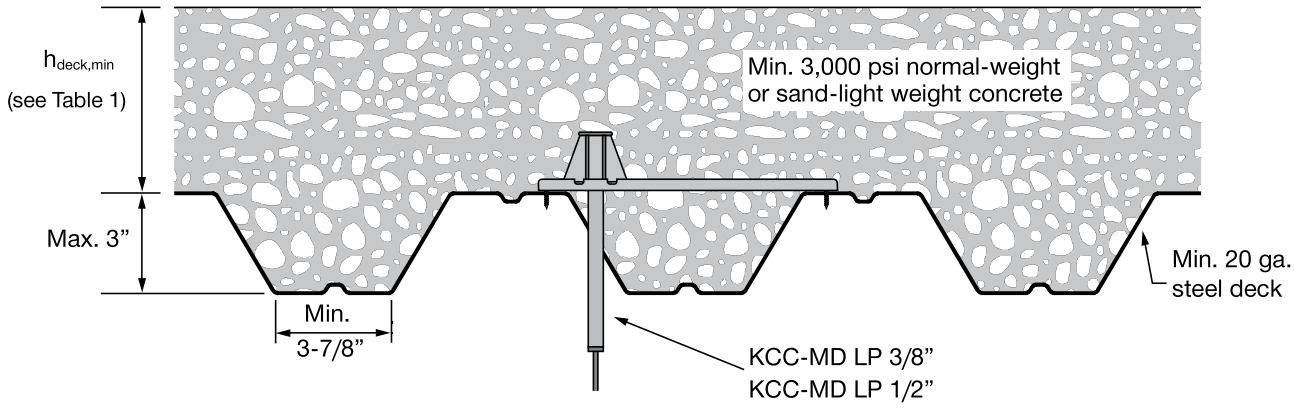

Figure 5D — Installation of KCC-MD inserts in the soffit of concrete filled metal deck floor and roof assemblies-over flute incline (W-deck)

DESIGN DATA IN CONCRETE PER CSA A23.3

CSA A23.3 Annex D Design

Limit State Design of anchors is described in the provisions of CSA A23.3 Annex D for post-installed anchors tested and assessed in accordance with ACI 355.2 for mechanical anchors and ACI 355.4 for adhesive anchors. This section contains the Limit State Design tables with unfactored characteristic loads that are based on the published loads in ICC Evaluation Services ESR-4145. These tables are followed by factored resistance tables. The factored resistance tables have characteristic design loads that are prefactored by the applicable reduction factors for a single anchor with no anchor-to-anchor spacing of edge distance adjustments for the convenience of the user of this document. All the figures in the previous ACI 318 Chapter 17 design section are applicable to Limit State Design and the tables will reference these figures.

For a detailed explanation of the tables developed in accordance with CSA A23.3 Annex D, refer to PTG ED. 19, Section 3.1.8. Technical assistance is available by contacting Hilti Canada at (800) 363-4458 or at www.hilti.ca.

Table 17 — Hilti KCC-WF insert design information in accordance with CSA A23.3 (R2014) Annex D [1,4]

Design parameter	Symbol	Units	Nominal anchor diameter		Ref A23.3-14
			3/8"	1/2"	
Outside diameter of anchor steel body	d_a	in.	0.67	0.87	
		(mm)	(17)	(22)	
Effective embedment	h_{ef}	in.	1.63	2.04	
		(mm)	(41)	(52)	
Minimum member thickness	h_{min}	in.	2.5	3	
		(mm)	(51)	(76)	
Minimum edge distance	c_{min}	in.	1-1/2		
		(mm)	(38)		
Minimum anchor spacing	s_{min}	*in.*	2.6	3.5	
		(mm)	(67)	(88)	
Steel embed. material resistance factor for reinforcement	Φ_s	-	0.85		8.4.3
Resistance modification factor for tension, steel failure modes [2]	R	-	0.70		D.5.3
Resistance modification factor for shear, steel failure modes [2]	R	-	0.65		D.5.3
Factored steel resistance in tension	N_{sar}	lb	2,404	3,219	D.6.1.2
		(kN)	(10.7)	(14.3)	
Factored steel resistance in tension, seismic	$N_{sar,eq}$	lb	2,404	3,219	D.6.1.2
		(kN)	(10.7)	(14.3)	
Factored steel resistance in shear	V_{sar}	lb	2,735	3,075	D.7.1.2
		(kN)	(12.2)	(13.7)	
Factored steel resistance in shear, seismic	$V_{sar,eq}$	lb	2,735	3,075	D.7.1.2
		(kN)	(12.2)	(13.7)	
Coeff. for factored conc. breakout resistance, uncracked concrete	$k_{c,uncr}$	-	10		D.6.2.2
Coeff. for factored conc. breakout resistance, cracked concrete	$k_{c,cr}$	-	10		D.6.2.2
Modification factor for anchor resistance, tension, uncracked conc.	$\Psi_{c,N}$	-	1.25		D.6.2.6
Modification factor for anchor resistance, tension, cracked conc.	$\Psi_{c,N}$		1.0		D.6.2.6
Anchor category	-	-	cast-in		D.5.3 (c)
Concrete material resistance factor	Φ_c	-	0.65		8.4.2
Resistance modification factor for tension and shear, concrete failure modes, Condition B [3]	R	-	1.00		D.5.3 (c)

1 Design information in this table is taken from ICC-ES ESR-4145, and converted for use with CSA A23.3 (R2014) Annex D.
2 The carbon steel KCC-WF is considered a brittle steel element as defined by CSA A23.3 (R2014) Annex D section D.2.
3 For use with the load combinations of CSA A23.3 (R2014) chapter 8. Condition B applies where supplementary reinforcement in conformance with CSA A23.3 (R2014) section D.5.3 is not provided, or where pullout or pryout strength governs. For cases where the presence of supplementary reinforcement can be verified, the resistance modification factors associated with Condition A may be used.
4 Values are for the insert only. The capacity of the threaded rod must be also be determined from Table 27. The design strength of concrete must be in accordance with CSA A23.3 (R2014) and Tables 18 to 19 as necessary. Compare the values (threaded rod, inserts, and concrete). The lesser of the values is to be used for the design.

Table 18 — Hilti KCC-WF cast-in insert design strength with concrete / pullout failure in uncracked concrete [1,2,3,4,5,6]

Nominal anchor internal diameter	Effective embedment depth in. (mm)	Tension - ΦN_n				Shear - ΦV_n			
		f'_c = 2,500 psi (17.2 MPa) lb (kN)	f'_c = 3,000 psi (20.7 MPa) lb (kN)	f'_c = 4,000 psi (27.6 MPa) lb (kN)	f'_c = 6,000 psi (41.1 MPa) lb (kN)	f'_c = 2,500 psi (17.2 MPa) lb (kN)	f'_c = 3,000 psi (20.7 MPa) lb (kN)	f'_c = 4,000 psi (27.6 MPa) lb (kN)	f'_c = 6,000 psi (41.1 MPa) lb (kN)
3/8"	1.63	2,185	2,390	2,760	3,385	2,185	2,390	2,760	3,385
	(41)	(9.7)	(10.6)	(12.3)	(15.1)	(9.7)	(10.6)	(12.3)	(15.1)
1/2"	2.04	3,055	3,350	3,865	4,735	3,055	3,350	3,865	4,735
	(52)	(13.6)	(14.9)	(17.2)	(21.1)	(13.6)	(14.9)	(17.2)	(21.1)

Table 19 — Hilti KCC-WF cast-in insert design strength with concrete / pullout failure in cracked concrete [1,2,3,4,5,6]

Nominal anchor internal diameter	Effective embedment depth in. (mm)	Tension - ΦN_n				Shear - ΦV_n			
		f'_c = 2,500 psi (17.2 MPa) lb (kN)	f'_c = 3,000 psi (20.7 MPa) lb (kN)	f'_c = 4,000 psi (27.6 MPa) lb (kN)	f'_c = 6,000 psi (41.1 MPa) lb (kN)	f'_c = 2,500 psi (17.2 MPa) lb (kN)	f'_c = 3,000 psi (20.7 MPa) lb (kN)	f'_c = 4,000 psi (27.6 MPa) lb (kN)	f'_c = 6,000 psi (41.1 MPa) lb (kN)
3/8"	1.63	1,745	1,910	2,210	2,705	1,745	1,910	2,210	2,705
	(41)	(7.8)	(8.5)	(9.8)	(12.0)	(7.8)	(8.5)	(9.8)	(12.0)
1/2"	2.04	2,445	2,680	3,095	3,790	2,445	2,680	3,095	3,790
	(52)	(10.9)	(11.9)	(13.8)	(16.9)	(10.9)	(11.9)	(13.8)	(16.9)

1 See PTG Ed. 19, Section 3.1.8.6 to convert design strength value to ASD value.
2 Linear interpolation between concrete compressive strengths is not permitted.
3 Tabular values are for single anchors located at edge distance (c) and spacing (s) greater than $3h_{ef}$. For anchors with edge distance or spacing less than $3h_{ef}$ use ACI 318 to calculate load reduction factor. Compare the calculated value to the steel values (threaded rod and inserts) in Tables 17 and 27. The lesser of the values is to be used for the design.
4 Tabular values are for normal weight concrete only. For lightweight concrete multiply design strength by λ_a as follows:
For sand-lightweight, λ_a = 0.85. For all-lightweight, λ_a = 0.75.
5 Tabular values are for static loads only. Seismic design is not permitted for uncracked concrete. For seismic tension loads, multiply cracked concrete tabular values in tension by $\alpha_{N,seis}$ = 0.75. No reduction needed for seismic shear.
6 Compare tabular value to the insert steel strength values in Table 17 and threaded rod steel strength values in Table 27 The lesser of the values is to be used for the design.

Table 20 — Design strength for steel failure of KCC-MD Short Plate and Long Plate inserts [1,2,3,4,5]

Design information	Symbol	Units	Insert Type			
			SP 3/8”	SP 1/2”	LP 3/8”	LP 1/2”
Nominal rod diameter (in.)	-	in.	3/8	1/2	3/8	1/2
Anchor O.D.	d_a	in.	0.67	0.87	0.67	0.87
		(mm)	(17)	(22)	(17)	(22)
Effective embedment	h_{ef}	in.	2.00	2.50	2.00	2.50
		(mm)	(51)	(64)	(51)	(64)
Min. specified ult. Strength, f_{ut} lb (kN)	f_{ut}	lb	4,040	5,410	4,040	5,410
		(kN)	(18.0)	(24.1)	(18.0)	(24.1)
Anchor category	-	-	Cast-In			
Concrete material resistance factor	ϕ_c	-	0.65			
Resistance modification factor for tension and shear, concrete failure modes, Condition B	R	-	1.00			
Steel embed. material resistance factor for reinforcement	ϕ_s	-	0.85			
Resistance modification factor for tension, steel failure modes	R	-	0.70			
Resistance modification factor for shear, steel failure modes	R	-	0.65			
Factored steel strength of insert in tension,	$\phi_{Nsa,insert}$	lb	2,405	3,220	2,405	3,220
		(kN)	(10.7)	(14.3)	(10.7)	(14.3)
Factored seismic steel strength of insert in tension	$\phi_{Nsa,insert,eq}$	lb	2,405	3,220	2,405	3,220
		(kN)	(11)	(14)	(11)	(14.3)
Installations in upper flute of metal deck (i.e. W-deck and B-deck) according to Figures 5A						
Factored steel strength of insert in shear	$\phi_{Vsa,insert}$	lb	2,590	3,075	2,590	3,075
		(kN)	(12)	(14)	(12)	(14)
Factored seismic steel strength of insert in shear	$\phi_{Vsa,insert,eq}$	lb	2,590	4,875	2,590	4,875
		(kN)	(12)	(22)	(12)	(22)
Installations in lower flute of metal deck (i.e. W-deck) according to Figures 5B						
Factored steel strength of insert in shear	$\phi_{Vsa,insert}$	lb	1,900	2,310	2,735	3,075
		(kN)	(8)	(10)	(12)	(14)
Factored seismic steel strength of insert in shear	$\phi_{Vsa,insert,eq}$	lb	1,900	2,310	2,735	3,075
		(kN)	(8)	(10)	(12)	(14)
Installations in lower flute of metal deck (i.e. B-deck) according to Figures 5C						
Factored steel strength of insert in shear	$\phi_{Vsa,insert}$	lb	1,745	2,190	2,660	3,075
		(kN)	(8)	(10)	(12)	(14)
Factored seismic steel strength of insert in shear	$\phi_{Vsa,insert,eq}$	lb	1,745	2,190	2,660	3,075
		(kN)	(8)	(10)	(12)	(14)
Installations in lower flute of metal deck (i.e. W-deck) according to Figures 5D						
Factored steel strength of insert in shear	$\phi_{Vsa,insert}$	lb	N/A		950	2,455
		(kN)			(4)	(11)
Factored seismic steel strength of insert in shear	$\phi_{Vsa,insert,eq}$	lb			950	1,965
		(kN)			(4)	(9)

1 Design information in this table is taken from ICC-ES ESR-4145, Table 4, and converted for use with CSA A23.3 (R2014) Annex D.
2 The carbon steel KCC-MD is considered a brittle steel element as defined by CSA A23.3 (R2014) Annex D section D.2.
3 Tension values are for the inserts only. The capacity of the threaded rods must be also determined from Table 27. The design strength of concrete must be obtained from tables 21-27. Compare the tension values of threaded rod, inserts, and concrete. The lesser of the values is to be used for the design.
4 Shear values are for the inserts only. The capacity of the threaded rods must be also determined from Table 27. The calculation of concrete shear strength is not required. Compare the shear values of threaded rod and inserts. The lesser of the values is to be used for the design strength of the anchor in shear.
5 Only threaded rod ASTM A193 Grade B7, ASTM A325, or ASTM F1554 Grade 105 is permitted to be used for the applications resisting shear, seismic shear, or seismic tension loads.

Table 21 — Hilti KCC-MD Short Plate and Long Plate factored tension resistance in the soffit of uncracked sand-lightweight concrete over metal deck (B profile) [1,2,3,4,5,6,7,8]

Anchor	Nominal embed. in. (mm)	Upper flute per Figure 5A		Lower flute per Figure 5C	
		Tension - N_r		Tension - N_r	
		f'_c = 20 MPa (2,900 psi) lb (kN)	f'_c = 30 MPa (4,350 psi) lb (kN)	f'_c = 20 MPa (2,900 psi) lb (kN)	f'_c = 30 MPa (4,350 psi) lb (kN)
SP 3/8”	2.13 (54)	3,300 (14.7)	4,040 (18.0)	580 (2.6)	710 (3.2)
SP 1/2”	2.63 (67)	4,180 (18.6)	5,120 (22.8)	635 (2.8)	775 (3.4)
LP 3/8”	2.21 (56)	3,300 (14.7)	4,040 (18.0)	3,300 (14.7)	4,040 (18.0)
LP 1/2”	2.71 (69)	4,180 (18.6)	5,120 (22.8)	4,180 (18.6)	5,120 (22.8)

Table 22 — Hilti KCC-MD Short Plate and Long Plate factored tension resistance in the soffit of cracked sand-lightweight concrete over metal deck (B profile) [1,2,3,4,5,6,7,8]

Anchor	Nominal embed. in. (mm)	Upper flute per Figure 5A		Lower flute per Figure 5C	
		Tension - N_r		Tension - N_r	
		f'_c = 20 MPa (2,900 psi) lb (kN)	f'_c = 30 MPa (4,350 psi) lb (kN)	f'_c = 20 MPa (2,900 psi) lb (kN)	f'_c = 30 MPa (4,350 psi) lb (kN)
SP 3/8”	2.13 (54)	2,640 (11.7)	3,230 (14.4)	465 (2.1)	565 (2.5)
SP 1/2”	2.63 (67)	3,345 (14.9)	4,095 (18.2)	505 (2.2)	620 (2.8)
LP 3/8”	2.21 (56)	2,640 (11.7)	3,230 (14.4)	2,640 (11.7)	3,230 (14.4)
LP 1/2”	2.71 (69)	3,345 (14.9)	4,095 (18.2)	3,345 (14.9)	4,095 (18.2)

1 See Section 3.1.8.6 to convert design strength value to ASD value.
2 Linear interpolation between concrete compressive strengths is not permitted.
3 Tabular value is for one anchor per flute. Minimum spacing along the length of the flute is 3 x h_{ef} (effective embedment).
4 Tabular values are for normal weight or sand-light weight concrete.
5 No additional reduction factors for spacing or edge distance need to be applied.
6 Compare tabular value to the insert steel strength values in Table 17 and threaded rod steel strength values in Table 27. The lesser of the values is to be used for the design.
7 Tabular values are for static loads only. For seismic tension loads, multiply cracked concrete tabular values in tension by $\alpha_{N,seis}$ = 0.75. See PTG ED.19, Section 3.1.8.7 for additional information on seismic applications.
8 For Hilti KCC-MD anchors, calculation of static and seismic concrete strength in shear is not required. See Table 20 for shear calculations.

Table 23 — Hilti KCC-MD Short Plate and Long Plate factored tension resistance in the soffit of uncracked sand-lightweight concrete over metal deck (W profile with 3-7/8” width) [1,2,3,4,5,6,7,8]

Anchor	Nominal embed. in. (mm)	Upper flute per Figure 5A		Lower flute per Figure 5B		Inclined per Figure 5D	
		Tension - N_r		Tension - N_r		Tension - N_r	
		f'_c = 20 MPa (2,900 psi) lb (kN)	f'_c = 30 MPa (4,350 psi) lb (kN)	f'_c = 20 MPa (2,900 psi) lb (kN)	f'_c = 30 MPa (4,350 psi) lb (kN)	f'_c = 20 MPa (2,900 psi) lb (kN)	f'_c = 30 MPa (4,350 psi) lb (kN)
SP 3/8”	2.13 (54)	3,300 (14.7)	4,040 (18.0)	1,685 (7.5)	2,065 (9.2)	-	-
SP 1/2”	2.63 (67)	4,180 (18.6)	5,120 (22.8)	1,935 (8.6)	2,370 (10.5)	-	-
LP 3/8”	2.21 (56)	3,300 (14.7)	4,040 (18.0)	4,470 (19.9)	5,475 (24.4)	3,300 (14.7)	4,040 (18.0)
LP 1/2”	2.71 (69)	4,180 (18.6)	5,120 (22.8)	5,990 (26.6)	7,340 (32.6)	4,180 (18.6)	5,120 (22.8)

Table 24 — Hilti KCC-MD Short Plate and Long Plate factored tension resistance in the soffit of cracked sand-lightweight concrete over metal deck (W profile with 3-7/8” width) [1,2,3,4,5,6,7,8]

Nominal anchor diameter in.	Nominal embed. in. (mm)	Upper flute per Figure 5A		Lower flute per Figure 5B		Inclined per Figure 5D	
		Tension - N_r		Tension - N_r		Tension - N_r	
		f'_c = 20 MPa (2,900 psi) lb (kN)	f'_c = 30 MPa (4,350 psi) lb (kN)	f'_c = 20 MPa (2,900 psi) lb (kN)	f'_c = 30 MPa (4,350 psi) lb (kN)	f'_c = 20 MPa (2,900 psi) lb (kN)	f'_c = 30 MPa (4,350 psi) lb (kN)
SP 3/8”	2.13 (54)	2,640 (11.7)	3,230 (14.4)	1,350 (6.0)	1,655 (7.4)	-	-
SP 1/2”	2.63 (67)	3,345 (14.9)	4,095 (18.2)	1,550 (6.9)	1,895 (8.4)	-	-
LP 3/8”	2.21 (56)	2,640 (11.7)	3,230 (14.4)	3,575 (15.9)	4,380 (19.5)	2,640 (11.7)	3,230 (14.4)
LP 1/2”	2.71 (69)	3,345 (14.9)	4,095 (18.2)	4,795 (21.3)	5,870 (26.1)	3,345 (14.9)	4,095 (18.2)

1 See Section 3.1.8.6 to convert design strength value to ASD value.
2 Linear interpolation between concrete compressive strengths is not permitted.
3 Tabular value is for one anchor per flute. Minimum spacing along the length of the flute is 3 x h_{ef} (effective embedment).
4 Tabular values are for normal weight or sand-light weight concrete.
5 No additional reduction factors for spacing or edge distance need to be applied.
6 Compare tabular value to the insert steel strength values in Compare tabular value to the insert steel strength values in Table 17 and threaded rod steel strength values in Table 27. The lesser of the values is to be used for the design.
7 Tabular values are for static loads only. For seismic tension loads, multiply cracked concrete tabular values in tension by $\alpha_{N,seis}$ = 0.75. See PTG ED.19, Section 3.1.8.7 for additional information on seismic applications.
8 For Hilti KCC-MD anchors, calculation of static and seismic concrete strength in shear is not required. See Table 20 for shear calculations.

Table 25 — Hilti KCC-MD Short Plate and Long Plate factored tension resistance in the soffit of uncracked sand-lightweight concrete over metal deck (W profile with 4-1/2" width) [1,2,3,4,5,6,7,8]

Anchor	Nominal embed. in. (mm)	Upper flute per Figure 5A		Lower flute per Figure 5B		Inclined per Figure 5D	
		Tension - N_r		Tension - N_r		Tension - N_r	
		f'_c = 20 MPa (2,900 psi) lb (kN)	f'_c = 30 MPa (4,350 psi) lb (kN)	f'_c = 20 MPa (2,900 psi) lb (kN)	f'_c = 30 MPa (4,350 psi) lb (kN)	f'_c = 20 MPa (2,900 psi) lb (kN)	f'_c = 30 MPa (4,350 psi) lb (kN)
SP 3/8"	2.13 (54)	3,300 (14.7)	4,040 (18.0)	1,685 (7.5)	2,065 (9.2)	-	-
SP 1/2"	2.63 (67)	4,180 (18.6)	5,120 (22.8)	1,935 (8.6)	2,370 (10.5)	-	-
LP 3/8"	2.21 (56)	3,300 (14.7)	4,040 (18.0)	4,470 (19.9)	5,475 (24.4)	3,300 (14.7)	4,040 (18.0)
LP 1/2"	2.71 (69)	4,180 (18.6)	5,120 (22.8)	5,990 (26.6)	7,340 (32.6)	4,180 (18.6)	5,120 (22.8)

Table 26 — Hilti KCM-MD Short Plate and Long Plate factored tension resistance in the soffit of cracked sand-lightweight concrete over metal deck (W profile with 4-1/2" width) [1,2,3,4,5,6,7,8]

Anchor	Nominal embed. in. (mm)	Upper flute per Figure 5A		Lower flute per Figure 5B		Inclined per Figure 5D	
		Tension - N_r		Tension - N_r		Tension - N_r	
		f'_c = 20 MPa (2,900 psi) lb (kN)	f'_c = 30 MPa (4,350 psi) lb (kN)	f'_c = 20 MPa (2,900 psi) lb (kN)	f'_c = 30 MPa (4,350 psi) lb (kN)	f'_c = 20 MPa (2,900 psi) lb (kN)	f'_c = 30 MPa (4,350 psi) lb (kN)
SP 3/8"	2.13 (54)	2,640 (11.7)	3,230 (14.4)	1,350 (6.0)	1,655 (7.4)	-	-
SP 1/2"	2.63 (67)	3,345 (14.9)	4,095 (18.2)	1,550 (6.9)	1,895 (8.4)	-	-
LP 3/8"	2.21 (56)	2,640 (11.7)	3,230 (14.4)	3,575 (15.9)	4,380 (19.5)	2,640 (11.7)	3,230 (14.4)
LP 1/2"	2.71 (69)	3,345 (14.9)	4,095 (18.2)	4,795 (21.3)	5,870 (26.1)	3,345 (14.9)	4,095 (18.2)

1 See Section 3.1.8.6 to convert design strength value to ASD value.
2 Linear interpolation between concrete compressive strengths is not permitted.
3 Tabular value is for one anchor per flute. Minimum spacing along the length of the flute is 3 x h_{ef} (effective embedment).
4 Tabular values are for normal weight or sand-light weight concrete.
5 No additional reduction factors for spacing or edge distance need to be applied.
6 Compare tabular value to the insert steel strength values in Table 17 and threaded rod steel strength values in Table 27. The lesser of the values is to be used for the design.
7 Tabular values are for static loads only. For seismic tension loads, multiply cracked concrete tabular values in tension by $\alpha_{N,seis}$ = 0.75. See PTG ED.19, Section 3.1.8.7 for additional information on seismic applications.
8 For Hilti KCC-MD anchors, calculation of static and seismic concrete strength in shear is not required. See Table 20 for shear calculations.

Table 27 — Design strength for steel failure of common threaded rods used with KCC-WF and KCC-MD cast-in anchor [1,2,3]

Nominal anchor diameter	Grade A36 threaded rod			ASTM A 193 B7 or ASTM F1554 Gr. 105 threaded rod			ASTM A 307, Grade A threaded rod		
	Tensile[4] $\phi N_{sar,rod}$ or $\phi N_{sar,eq,rod}$ lb (kN)	Shear[5] $\phi V_{sar,rod}$ lb (kN)	Seismic Shear[6] $\phi V_{sar,eq,rod}$ lb (kN)	Tensile[4] $\phi N_{sar,rod}$ or $\phi N_{sar,eq,rod}$ lb (kN)	Shear[5] $\phi V_{sar,rod}$ lb (kN)	Seismic Shear[6] $\phi V_{sar,eq,rod}$ lb (kN)	Tensile[4] $\phi N_{sar,rod}$ or $\phi N_{sar,eq,rod}$ lb (kN)	Shear[5] $\phi V_{sar,rod}$ lb (kN)	Seismic Shear[6] $\phi V_{sar,eq,rod}$ lb (kN)
1/4	1,260 (5.6)	705 (3.1)	495 (2.2)	2,720 (12.1)	1,520 (6.8)	1,064 (4.7)	1,290 (5.7)	725 (3.2)	508 (2.3)
3/8	3,075 (13.7)	1,720 (7.7)	1,205 (5.4)	6,630 (29.5)	3,705 (16.5)	2,594 (11.5)	3,160 (14.1)	1,780 (7.9)	1,246 (5.5)

1 See section 3.1.8.6 to convert design strength value to ASD value.
2 Hilti KCC-WF and KCC-MD anchors are to be considered brittle steel elements
3 See Section 3.1.8.7 for additional information on seismic applications.
4 Tensile $N_{sar} = \phi_s A_{se,N} R f_{ut}$ as noted in CSA A23.3 Annex D.
5 Shear values determined by static shear tests with $V_{sar} < \phi_s 0.60 A_{se,V} f_{ut} R$. as noted in CSA A23.3 Annex D.
6 Seismic shear values determined by seismic shear tests with $V_{sar,eq} < \phi_s 0.60 A_{se,V} f_{ut} R$. as noted in CSA A23.3 Annex D.

Table 28 — UL cUL LLC and FM approvals for KCC-WF, KCC-MD Short Plate and KCC-MD Long Plate Anchors [1,2]

Design information		WF and SP-MD 3/8"			WF and SP-MD 1/2"			LP 3/8"			LP 1/2"		
Nominal rod diameter (in.)	Metal deck soffit or Wood Form	UL max pipe size (in.)	Test load (lb)	FM max pipe size (in.)	UL max pipe size (in.)	Test load (lb)	FM max pipe size (in.)	UL max pipe size (in.)	Test load (lb)	FM max pipe size (in.)	UL max pipe size (in.)	Test load (lb)	FM max pipe size (in.)
3/8	Wood Form	4	1,500	4	-	-	-	4	1,500	4	-	-	-
	Upper flute	4	1,500	4	-	-	-	4	1,500	4	-	-	-
	Lower flute	4	1,500	4	-	-	-	4	1,500	4	-	-	-
1/2	Wood Form	-	-	-	8	4,050	8	-	-	-	8	4,050	8
	Upper flute	-	-	-	8	4,050	8	-	-	-	8	4,050	8
	Lower flute	-	-	-	8	4,050	8	-	-	-	8	4,050	8

1 UL LLC Listing based on successful completion of testing in accordance with UL 203.
2 FM Approval based on successful completion of testing in accordance with FM 1952.

INSTALLATION INSTRUCTIONS

Installation Instructions For Use (IFU) are included with each product package. They can also be viewed of downloaded online at www.hilti.com and www.hilti.ca. Because of the possibility of changes, always verify that downloaded IFU are current when used. Proper installation is critical to achieve full performance. Training is available on request. Contact Hilti Technical Services for applications and conditions not addressed in the IFU.

ORDERING INFORMATION

KCC-WF and KCC-MD Short Plate and Long Plate cast-in anchors for use in metal deck[1]

Description	Anchor color [2]	Qty / box	Hole saw diameter
KCC-WF 3/8"	Dark Green	150	N/A
KCC-WF 1/2"	Dark Orange	100	N/A
KCC-MD SP 3/8"	Dark Green	75	11/16"
KCC-MD SP 1/2"	Dark Orange	45	13/16"
KCC-MD LP 3/8"	Dark Green	20	5/8"
KCC-MD LP 1/2"	Dark Orange	15	3/4"

1 All dimensions in inches
2 Identifies anchor size

GENERAL INFORMATION

WOOD-KNOCKER®II+ AND PAN-KNOCKER™II+

Concrete Inserts

PRODUCT DESCRIPTION

Wood-Knocker II+ and Pan-Knocker II+ concrete inserts are installed onto forms used to support newly poured concrete floor slabs, roof slabs or walls. The concrete inserts are specifically designed to provide hanger attachments for mechanical, electrical, plumbing (MEP) and fire protection.

When the forms are stripped, the color-coded flange is visibly embedded in the concrete surface. The inserts allow the attachment of steel threaded rod or threaded bolts in sizes ranging from 1/4" to 3/4" in diameter. The sturdy base and rib design minimizes the chance of inserts accidentally being hit out of place after attachment to the forms. The impact plate offers resistance to rotation within the concrete as a steel threaded rod or threaded bolt is being turned during installation.

A push-in thread version is also available which does not require turning the threaded rod or threaded bolt during installation which can be ideal for applications such as mounting prefabricated hardware and hanger assemblies.

GENERAL APPLICATIONS AND USES

- Hanging Pipe and Sprinkler Systems
- HVAC Ductwork and Strut Channels
- Suspending Trapeze and Cable Trays
- Cast-In Pre-installed Anchoring Points
- Distribution Systems / Utility Lines
- Conduit and Lighting Systems
- Cracked and Uncracked Concrete
- Seismic Qualification (SDC A - F)

FEATURES AND BENEFITS

+ Fast and simple to install, low installed cost
+ Sturdy base design resists inserts from being kicked over after placement
+ Color coded by size for simple identification, can be further marked by trade and/or utility
+ Inserts can be installed in form pours only 3.5" thick; low profile (LP) inserts can be installed in form pours only 2.5" thick (see installation details)
+ Suitable for seismic and wind loading (see design information)
+ Multi thread inserts allow for multiple diameters using the same part
+ All sizes of multi thread inserts have performance data for tension and shear loading
+ Push-In thread version does not require turning threaded rod elements during installation

APPROVALS AND LISTINGS

- International Code Council, Evaluation Service (ICC-ES), ESR-3657 for concrete
- Code compliant with the 2021 IBC/IRC, 2018 IBC/IRC, 2015 IBC/IRC, and 2012 IBC/IRC
- Tested in accordance with ASTM E488 and ICC-ES AC446 for use in cracked and uncracked concrete and with the design provisions of ACI 318 (Strength Design method)
- Evaluated and qualified by an accredited independent testing laboratory for recognition in cracked and uncracked concrete including seismic and wind loading
- Underwriters Laboratories (UL Listed) - File No. EX1289 and VFXT7.EX1289, Also UL tested and recognized for use in air handling spaces (i.e. plenum rated locations) in accordance with UL 2043; as referenced by UL 203 for pipe hanger equipment
- FM Approvals (Factory Mutual), Class Numbers 1951, 1952, 1953 for pipe hanger components – see FM Approval Guide

GUIDE SPECIFICATIONS

CSI Divisions: 03 15 19 - Cast-In Concrete Anchors and 03 16 00 - Concrete Anchors. Concrete inserts shall be Wood-Knocker II+ or Pan-Knocker II+ as supplied by DEWALT, Towson, MD. Anchors shall be installed in accordance with published instructions and the Authority Having Jurisdiction.

SECTION CONTENTS

General Information.....1
Material Specifications.....2
Installation Instructions.....2
Installation Specifications.....3
Performance Data (ASD).....5
Strength Design Information.....6
Design Strength Tables (SD).....10
Ordering Information.....13

WOOD-KNOCKER II+ FORM INSERT

PAN-KNOCKER II+ FORM INSERT 'NO NAIL' VERSION OF WOOD-KNOCKER II+

WOOD-KNOCKER II+ FORM INSERT PUSH-IN THREAD

PAN-KNOCKER II+ FORM INSERT PUSH-IN THREAD

ANCHOR MATERIALS

- Carbon Steel and Engineered Plastic

ROD/ANCHOR SIZE RANGE (TYP.)

- 1/4" through 3/4" diameters (UNC)

INSERT VERSIONS

- Thread-In
- Push-In

SUITABLE BASE MATERIALS

- Normal-weight Concrete
- Lightweight Concrete

CODE LISTED
ICC-ES ESR-3657
CONCRETE

DDA
DEWALT DESIGN ASSIST

MATERIAL SPECIFICATIONS

Wood-Knocker II+ and Pan-Knocker II+

Anchor Component	Component Material
Insert Body	AISI 1008 Carbon Steel or equivalent
Plastic sleeve	Engineered Plastic (polypropylene)
Zinc Plating (metal components)	ASTM B633 (Fe/Zn5) Min. plating requirements for mild service condition

Material Properties for Common Threaded Rods

Description	Steel Specification (ASTM)	Threaded Rod Diameter (inch)	Minimum Yield Strength, f_y (ksi)	Minimum Ultimate Strength, f_u (ksi)
Standard Carbon Steel	A36 or ASTMF1554, Grade 36	1/4 to 3/4	36.0	58.0
High Strength Carbon Steel	A193, Grade B7	1/4 to 3/4	105.0	125.0

Inserts may be considered for use in conjunction with all grades of continuously threaded carbon steel (all-thread) that comply with code reference standards and that have thread characteristics comparable with ANSI B1.1 UNC Coarse Thread Series.

INSTALLATION INSTRUCTIONS

Installation Instructions for Wood-Knocker II+ Thread-In

POSITION

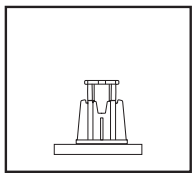

Step 1
Position insert on formwork plastic down.

DRIVE

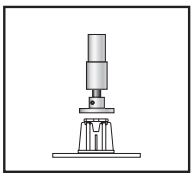

Step 2
Drive insert head down until head contacts plastic (e.g. Wood-Knocker installation tool, hammer).

PREPARE

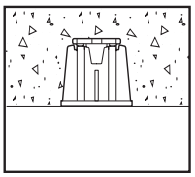

Step 3
After formwork removal, remove nails as necessary (e.g. flush mounted fixtures).

ATTACH

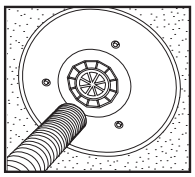

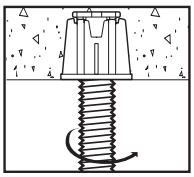

Step 4
Guide threaded rod/bolt through plastic thread seal cover. Turn until steel element fully threaded. Attach fixtures as applicable.

Installation Instructions for Wood-Knocker II+ Push-In

POSITION

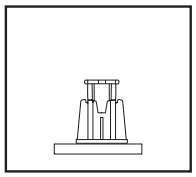

Step 1
Position insert on formwork plastic down.

DRIVE

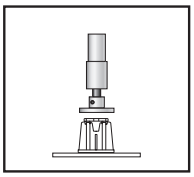

Step 2
Drive insert head down until head contacts plastic (e.g. Wood-Knocker installation tool, hammer).

PREPARE

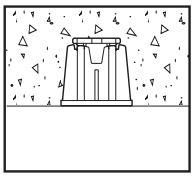

Step 3
After formwork removal, remove nails as necessary (e.g. flush mounted fixtures).

ATTACH

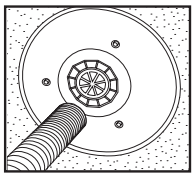

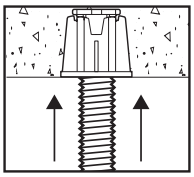

Step 4
Guide threaded rod/bolt through plastic thread seal cover. Push in until steel element is fully seated. Attach fixtures as applicable.

Note: for UL listing a nut must be installed snug against the insert.

Installation Instructions for Pan-Knocker II+ Thread-In

POSITION

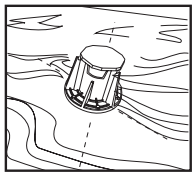

Step 1
Position insert on formwork plastic down.

MOUNT

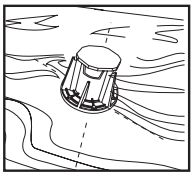

Step 2
Mount/secure insert to formwork through plastic base (e.g. with screws, pins).

PREPARE

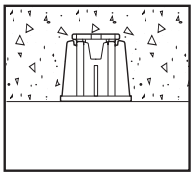

Step 3
After formwork removal, remove pins or screws as necessary (e.g. flush mounted fixtures).

ATTACH

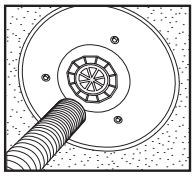

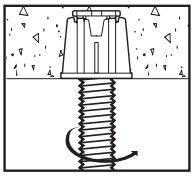

Step 4
Guide threaded rod/bolt through plastic thread seal cover. Turn until steel element fully threaded. Attach fixtures as applicable.

Installation Instructions for Pan-Knocker II+ Push-In

POSITION

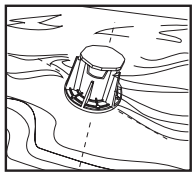

Step 1
Position insert on formwork plastic down.

MOUNT

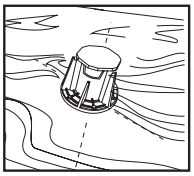

Step 2
Mount/secure insert to formwork through plastic base (e.g. with screws, pins).

PREPARE

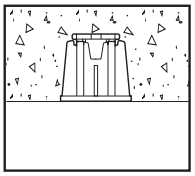

Step 3
After formwork removal, remove pins or screws as necessary (e.g. flush mounted fixtures).

ATTACH

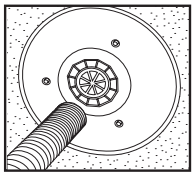

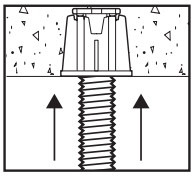

Step 4
Guide threaded rod/bolt through plastic thread seal cover. Push in until steel element is fully seated. Attach fixtures as applicable.

Note: for UL listing a nut must be installed snug against the insert.

INSTALLATION SPECIFICATIONS

Wood-Knocker II+ Inserts for Form Pour Concrete

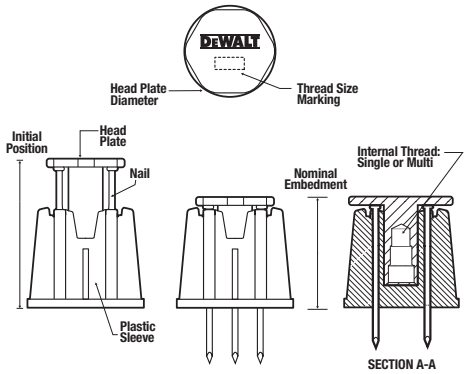

Pan-Knocker II+ Inserts for Form Pour Concrete

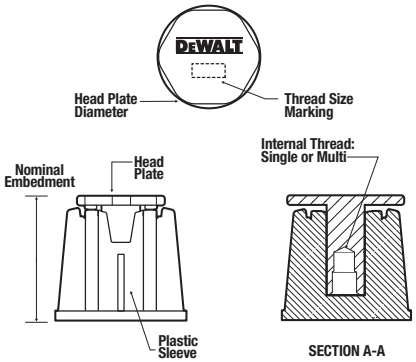

Installation Specifications for Wood-Knocker II+ and Pan-Knocker II+ Single Thread Inserts[1]

Insert Dimension / Property	Symbol	Units	Nominal Rod/Anchor Size						
			1/4" (LP)	3/8" (LP)	1/4"	3/8"	1/2"	5/8"	3/4"
Outside diameter of steel insert body	d_a	in. (mm)	0.5 (13)		0.7 (18)			1.0 (25)	
Insert head plate diameter	d_{hp}	in. (mm)	1.30 (33)		1.50 (38)			1.75 (45)	
Plastic sleeve diameter	d_s	in. (mm)	2 (51)		2-3/8 (60)			2-3/8 (60)	
Nominal embedment depth	h_{nom}	in. (mm)	1-1/2 (38)		2 (51)			2 (51)	
Effective embedment depth	h_{ef}	in. (mm)	1.25 (32)		1.75 (45)			1.75 (45)	
Minimum member thickness	h_{min}	in. (mm)	2-1/2 (64)		3-1/2 (89)			3-1/2 (89)	
Minimum spacing distance	s_{min}	in. (mm)	$4d_a$		$4d_a$			$4d_a$	
Minimum edge distance	c_{min}	in. (mm)	$0.5d_{hp}$ + 3/4 (19)		$0.5d_{hp}$ + 3/4 (19)			$0.5d_{hp}$ + 3/4 (19)	
Insert head plate thickness	t_{hp}	in. (mm)	1/8 (3)		1/8 (3)			1/8 (3)	
UNC internal thread size	-	TPI	1/4-20	3/8-16	1/4-20	3/8-16	1/2-13	5/8-11	3/4-10
Approx. internal thread length	-	in.	5/16	7/16	3/8	1/2	5/8	3/4	7/8
Approx. gap between plastic sleeve opening and start of internal thread, after setting	-	in.	5/16		3/8				

1. Inserts have internal thread size designations for coarse threads matching the nominal rod / anchor size.

Installation Specifications for Wood-Knocker II+ and Pan-Knocker II+ Multi Thread Inserts[1]

Insert Dimension / Property	Symbol	Units	Nominal Rod/Anchor Size													
			1/4" & 3/8" Multi (LP)		1/4" & 3/8" Multi		1/4" & 3/8" & 1/2" Multi			3/8" & 1/2" Multi		3/8" & 1/2" & 5/8" Multi			5/8" & 3/4" Multi	
Outside diameter of steel insert body	d_a	in. (mm)	0.5 (13)		0.7 (18)							1.0 (25)				
Insert head plate diameter	d_{hp}	in. (mm)	1.30 (33)		1.50 (38)							1.75 (45)				
Plastic sleeve diameter	d_s	in. (mm)	2 (51)		2-3/8 (60)							2-3/8 (60)				
Nominal embedment depth	h_{nom}	in. (mm)	1-1/2 (38)		2 (51)							2-3/8 (60)				
Effective embedment depth	h_{ef}	in. (mm)	1.25 (32)		1.75 (45)							2.25 (57)				
Minimum member thickness	h_{min}	in. (mm)	2-1/2 (64)		3-1/2 (89)							3-1/2 (89)				
Minimum spacing distance	s_{min}	in. (mm)	$4d_a$		$4d_a$							$4d_a$				
Minimum edge distance	c_{min}	in. (mm)	$0.5d_{hp}$ + 3/4 (19)		$0.5d_{hp}$ + 3/4 (19)							$0.5d_{hp}$ + 3/4 (19)				
Insert head plate thickness	t_{hp}	in. (mm)	1/8 (3)		1/8 (3)							1/8 (3)				
UNC internal thread size	-	TPI	1/4-20	3/8-16	1/4-20	3/8-16	1/4-20	3/8-16	1/2-13	3/8-16	1/2-13	3/8-16	1/2-13	5/8-11	5/8-11	3/4-10
Approx. internal thread length	-	in.	5/16	7/16	3/8	1/2	5/16	3/8	1/2	7/16	9/16	3/8	1/2	5/8	5/8	3/4
Approx. gap between plastic sleeve opening and start of internal thread, after setting	-	in.	7/8	5/16	1	5/16	1-7/16	15/16	5/16	1	5/16	1-11/16	1-1/16	5/16	1-3/16	5/16

1. Inserts have internal thread size designations for coarse threads matching the nominal rod / anchor size.

Installation Specifications for Wood-Knocker II+ and Pan-Knocker II+ Push-In Thread Inserts[1]

Insert Dimension / Property	Symbol	Units	Nominal Rod/Anchor Size	
			3/8"	1/2"
Outside diameter of steel insert body	d_a	in. (mm)	1.0 (25)	1.125 (29)
Insert head plate diameter	d_{hp}	in. (mm)	1.9 (48)	2.2 (56)
Plastic sleeve diameter	d_s	in. (mm)	2-3/8 (60)	2-3/8 (60)
Nominal embedment depth	h_{nom}	in. (mm)	1-7/8 (48)	2-3/16 (56)
Effective embedment depth	h_{ef}	in. (mm)	1.7 (43)	2.0 (56)
Minimum member thickness	h_{min}	in. (mm)	3-1/2 (89)	3-1/2 (89)
Minimum spacing distance	s_{min}	in. (mm)	$4d_a$	$4d_a$
Minimum edge distance	c_{min}	in. (mm)	$0.5d_{hp}$ + 3/4 (19)	$0.5d_{hp}$ + 3/4 (19)
Insert head plate thickness	t_{hp}	in. (mm)	3/16 (5)	3/16 (5)
UNC internal thread size	-	TPI	3/8-16	1/2-13
Approx. internal thread length	-	in.	5/8	11/16
Approx. gap between plastic sleeve opening and start of internal thread, after setting	-	in.	3/4	7/8

1. Inserts have internal thread size designations for coarse threads matching the nominal rod / anchor size.

Wood-Knocker II+ and Pan-Knocker II+ Inserts Installed in Soffit of Form Pour Concrete Floor and Roof Members

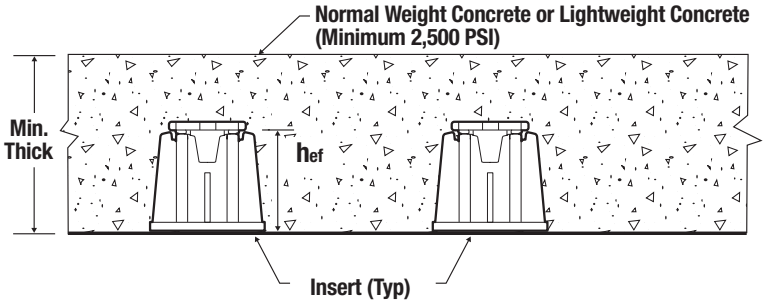

TECHNICAL GUIDE – MECHANICAL ANCHORS ©2023 DEWALT – REV. K

PERFORMANCE DATA (ASD)

Allowable Design Values for Inserts in Uncracked Concrete (lbs)[1,2,3,4,5,6,7,8,9,10,11,12]

Load Type	Wood-Knocker II+ and Pan-Knocker II+ Single Thread Inserts							Wood-Knocker II+ and Pan-Knocker II+ Push-In Thread Inserts	
	1/4" (LP)	3/8" (LP)	1/4"	3/8"	1/2"	5/8"	3/4"	3/8"	1/2"
Tension	1,085	1,085	1,055	1,800	1,800	1,800	1,800	1,725	2,200
Shear	400	1,085	720	1,710	1,800	1,800	1,800	1,470	2,200

Load Type	Wood-Knocker II+ and Pan-Knocker II+ Multi Thread Inserts													
	1/4 & 3/8 Multi (LP)		1/4 & 3/8 Multi		1/4 & 3/8 & 1/2 Multi			3/8 & 1/2 Multi		3/8 & 1/2 & 5/8 Multi			5/8 & 3/4 Multi	
	1/4"	3/8"	1/4"	3/8"	1/4"	3/8"	1/2"	3/8"	1/2"	3/8"	1/2"	5/8"	5/8"	3/4"
Tension	1,085	1,085	1,355	1,800	1,555	1,800	1,800	1,800	1,800	2,625	2,625	2,625	2,625	2,625
Shear	400	1,085	370	1,710	720	1,710	1,800	1,410	1,800	1,510	2,625	2,625	2,625	2,625

Allowable Stress Design Values in tables for inserts are provided for illustration and applicable only when the following design assumptions are followed:

1. Concrete compressive strength, f'c = 3,000 psi given for normal weight concrete.
2. Single anchors with static loads and with installation in accordance with published instructions.
3. Concrete determined to remain uncracked for the life of the anchorage.
4. Load combinations from AACI 318 (-19 and -14)-14 5.3 or ACI 318-11 9.2, as applicable (no seismic loading considered).
5. 30% dead load and 70% live load, controlling load combination 1.2D + 1.6L.
6. Calculation of the weighted average for α = 1.2*0.3 + 1.6*0.7 = 1.48.
7. Assuming no edge distance influence ($c_{a1} \geq 1.5h_{ef}$) and no side-face blowout in tension.
8. Assuming no edge distance ($c_{a1} \geq 3h_{ef}$) or corner distance influence ($c_{a2} \geq 1.5c_{a1}$) in shear.
9. Shear loads may be applied in any direction.
10. $h \geq h_{min}$ according to ACI 318-19 17.9, ACI 318-14 17.7 or ACI 318-11 D.8, as applicable.
11. Values are for Condition B where supplementary reinforcement in accordance with ACI 318-19 17.5.3, ACI 318-14 17.3.3 or ACI 318-11 D.4.3, as applicable, is not provided.
12. The allowable loads shown in the table are for the inserts only. The design professional is responsible for checking threaded rod strength in tension, shear and combined tension and shear, as applicable. For designs that include combined tension and shear, the interaction of tension and shear loads must be calculated in accordance with ACI 318 (-19 and -14) Chapter 17 or ACI 318-11 Appendix D.

Allowable Design Values for Inserts in Cracked Concrete (lbs)[1,2,3,4,5,6,7,8,9,10,11,12]

Load Type	Wood-Knocker II+ and Pan-Knocker II+ Single Thread Inserts							Wood-Knocker II+ and Pan-Knocker II+ Push-In Thread Inserts	
	1/4" (LP)	3/8" (LP)	1/4"	3/8"	1/2"	5/8"	3/4"	3/8"	1/2"
Tension	870	870	1,440	1,440	1,440	1,440	1,440	1,380	1,760
Shear	400	870	720	1,440	1,440	1,440	1,440	1,380	1,760

Load Type	Wood-Knocker II+ and Pan-Knocker II+ Multi Thread Inserts													
	1/4 & 3/8 Multi (LP)		1/4 & 3/8 Multi		1/4 & 3/8 & 1/2 Multi			3/8 & 1/2 Multi		3/8 & 1/2 & 5/8 Multi			5/8 & 3/4 Multi	
	1/4"	3/8"	1/4"	3/8"	1/4"	3/8"	1/2"	3/8"	1/2"	3/8"	1/2"	5/8"	5/8"	3/4"
Tension	870	870	1,355	1,440	1,440	1,440	1,440	1,440	1,440	2,100	2,100	2,100	2,100	2,100
Shear	400	870	370	1,440	720	1,440	1,440	1,440	1,440	1,510	2,100	2,100	2,100	2,100

Allowable Stress Design Values in tables for inserts are for illustration and applicable only when the following design assumptions are followed:

1. Concrete compressive strength, f'c = 3,000 psi given for normal weight concrete.
2. Single anchors with static loads and with installation in accordance with published instructions.
3. Concrete determined to remain cracked for the life of the anchorage.
4. Load combinations from ACI 318 (-19 and -14) 5.3 or ACI 318-11 9.2, as applicable (no seismic loading considered).
5. 30% dead load and 70% live load, controlling load combination 1.2D + 1.6L.
6. Calculation of the weighted average for α = 1.2*0.3 + 1.6*0.7 = 1.48.
7. Assuming no edge distance influence ($c_{a1} \geq 1.5h_{ef}$) and no side-face blowout in tension.
8. Assuming no edge distance ($c_{a1} \geq 3h_{ef}$) or corner distance influence ($c_{a2} \geq 1.5c_{a1}$) in shear.
9. Shear loads may be applied in any direction.
10. $h \geq h_{min}$ according to ACI 318-19 17.9, ACI 318-14 17.7 or ACI 318-11 D.8, as applicable.
11. Values are for Condition B where supplementary reinforcement in accordance with ACI 318-19 17.5.3, ACI 318-14 17.3.3 or ACI 318-11 D.4.3, as applicable, is not provided.
12. The allowable loads shown in the table are for the inserts only. The design professional is responsible for checking threaded rod strength in tension, shear and combined tension and shear, as applicable. For designs that include combined tension and shear, the interaction of tension and shear loads must be calculated in accordance with ACI 318 (-19 and -14) Chapter 17 or ACI 318-11 Appendix D.

UL Listings and FM Approvals for Supporting Fire Protection Services & Automatic Sprinkler Systems

Listing/Approval	Wood-Knocker II+ and Pan-Knocker II+ Single Thread Inserts							Wood-Knocker II+ and Pan-Knocker II+ Push-In Thread Inserts	
	1/4" LP	3/8" LP	1/4"	3/8"	1/2"	5/8"	3/4"	3/8"	1/2"
UL Max. Pipe Size	N/A	4"	N/A	4"	8"	8"	8"	4"	8"
FM Max. Pipe Size	N/A	4"	N/A	4"	8"	-	-	4"	8"

Listing/Approval	Wood-Knocker II+ and Pan-Knocker II+ Multi Thread Inserts													
	1/4 & 3/8 Multi (LP)		1/4 & 3/8 Multi		1/4 & 3/8 & 1/2 Multi			3/8 & 1/2 Multi		3/8 & 1/2 & 5/8 Multi			5/8 & 3/4 Multi	
	1/4"	3/8"	1/4"	3/8"	1/4"	3/8"	1/2"	3/8"	1/2"	3/8"	1/2"	5/8"	5/8"	3/4"
UL Max. Pipe Size	N/A	4"	N/A	4"	N/A	4"	8"	4"	8"	4"	8"	12"	12"	12"
FM Max. Pipe Size	N/A	4"	N/A	4"	N/A	4"	8"	4"	8"	4"	8"	12"	12"	12"

Underwriters Laboratories (UL Listed) – File No. EX1289 and VFXT7.EX1289. Also UL tested and recognized for use in air handling spaces (i.e. plenum rated locations).

FM Approvals (Factory Mutual) – see FM Approval Guide.

STRENGTH DESIGN INFORMATION

Design Information For Wood Knocker II+ and Pan-Knocker II+ Single Thread Inserts[1,2,3,4,5]

Design Information / Insert Property	Symbol	Units	1/4" (LP)	3/8" (LP)	1/4"	3/8"	1/2"	5/8"	3/4"
Outside diameter of the steel insert body	d_a	in. (mm)	0.5 (13)		0.7 (18)			1.0 (25)	
Insert head net bearing area	A_{brg}	in² (mm²)	1.00 (645)		1.20 (762)			1.40 (903)	
Effective embedment depth	h_{ef}	in. (mm)	1.25 (32)		1.75 (45)			1.75 (45)	
STEEL STRENGTH IN TENSION (ACI 318-19 17.6.1, ACI 318-14 17.4.1 or ACI 318-11 Section D.5.1)									
Steel strength in tension of single insert	$N_{sa,insert}$	lb (kN)	3,545 (15.8)	6,535 (29.1)	3,545 (15.8)	9,005 (40.1)		12,685 (56.4)	
Steel strength in tension of single insert, seismic	$N_{sa,insert,eq}$	lb (kN)	3,545 (15.8)	6,535 (29.1)	3,545 (15.8)	9,005 (40.1)		12,685 (56.4)	
Reduction factor, steel strength in tension	ϕ	-	0.65		0.65			0.65	
CONCRETE BREAKOUT STRENGTH IN TENSION (ACI 318-19 17.6.2, ACI 318-14 17.4.2 or ACI 318-11 D.5.2)									
Effectiveness factor for cracked concrete	k_c	-	24 (for SI use a value of 10)						
Modification factor for uncracked concrete	$\Psi_{c,N}$	-	1.25						
Reduction factor, concrete strength in tension	ϕ	-	0.70						
STEEL STRENGTH IN SHEAR (ACI 318-19 17.7.1, ACI 318-14 17.5.1 or ACI 318-11 Section D.6.1)									
Steel strength in shear of single insert	$V_{sa,insert,deck}$	lb (kN)	985 (4.4)	2,835 (12.6)	1,775 (7.9)	4,220 (18.8)	7,180 (31.9)	9,075 (40.4)	
Steel strength in shear of single insert, seismic	$V_{sa,insert,eq,deck}$	lb (kN)	385 (1.7)	625 (2.8)	1,775 (7.9)	4,220 (18.8)	7,180 (31.9)	9,075 (40.4)	
Reduction factor, steel strength in shear	ϕ	-	0.60		0.60			0.60	
CONCRETE BREAKOUT STRENGTH IN SHEAR (ACI 318-19 17.7.2, ACI 318-14 17.5.2 or ACI 318-11 D.6.2) AND PRYOUT STRENGTH IN SHEAR (ACI 318-19 17.7.3, ACI 318-14 17.5.3 or ACI 318-11 D.6.3)									
Load bearing length of insert	l_e	in. (mm)	1.25 (32)		1.75 (45)			1.75 (45)	
Reduction factor, concrete strength in shear	ϕ	-	0.70		0.70			0.70	
Coefficient for pryout strength	k_{cp}	-	1		1			1	
Reduction factor, pryout strength in shear	ϕ	-	0.70		0.70			0.70	

1. Concrete must have a compressive strength f 'c of 2,500 psi minimum. Installation must comply with published instructions.
2. Design of headed cast-in specialty inserts shall be in accordance with the provisions of ACI 318 (-19 and -14) Chapter 17 or ACI 318-11 Appendix D, as applicable, for cast-in headed anchors. Concrete breakout strength must also be in accordance with and steel deck figures, as applicable.
3. Strength reduction factors for the inserts shall be taken from ACI 318-19 17.5.3, ACI 318-14 17.3.3 or ACI 318-11 D.4.3, as applicable, for cast-in headed anchors. Strength reduction factors for load combinations in accordance with ACI 318 (-19 and -14) 5.3 or ACI 318-11 9.2, as applicable, governed by steel strength of the insert are tabulated. Strength reduction values correspond to brittle steel elements. The value of ϕ applies when the load combinations of 2021 IBC Section 1605.1 or 2018, 2015 and 2012 IBC 1605.2, ACI 318 (-19 or -14) Section 5.3 or ACI 318-11 9.2, as applicable, are used in accordance with ACI 318-14 17.3.3 or ACI 318-11 D.4.3, as applicable. If the load combinations of ACI 318-11 Appendix C are used, the appropriate value of ϕ must be determined in accordance with ACI 318-11 D.4.4.
4. Minimum spacing distance between anchors and minimum edge distances for cast-in headed anchors shall be in accordance with ACI 318-19 17.9, ACI 318-14 17.7 or ACI 318-11 D.8, as applicable and the installation tables for the inserts.
5. The strengths shown in the table are for inserts only. Design professional is responsible for checking threaded rod strength in tension, shear, and combined tension and shear, as applicable. See steel design information for common threaded rod elements.

TECHNICAL GUIDE – MECHANICAL ANCHORS ©2023 DEWALT – REV. K

Design Information for Wood Knocker II+ and Pan-Knocker II+ Multi Thread Inserts[2,3,4,5]

Design Information	Symbol	Units	1/4 & 3/8 Multi (LP)		1/4 & 3/8 Multi		1/4 & 3/8 & 1/2 Multi			3/8 & 1/2 Multi		3/8 & 1/2 & 5/8 Multi			5/8 & 3/4 Multi	
			1/4"	3/8"	1/4"	3/8"	1/4"	3/8"	1/2"	3/8"	1/2"	3/8"	1/2"	5/8"	5/8"	3/4"
Outside diameter of the steel insert body	d_a	in. (mm)	0.5 (13)		0.7 (18)							1.0 (25)				
Insert head net bearing area	A_{brg}	in² (mm²)	1.00 (645)		1.20 (762)							1.40 (903)				
Effective embedment depth	h_{ef}	in. (mm)	1.25 (32)		1.75 (45)							2.25 (57)				
STEEL STRENGTH IN TENSION (ACI 318-19 17.6.1, ACI 318-14 17.4.1 or ACI 318-11 Section D.5.1)																
Steel strength in tension of single insert	$N_{sa,insert}$	lb (kN)	3,545 (15.8)	6,535 (29.1)	3,085 (13.7)	9,005 (40.1)	3,545 (18.1)	7,515 (33.4)	9,005 (40.1)	9,005 (40.1)	9,005 (40.1)	8,630 (38.4)	16,610 (73.9)		17,100 (76.1)	
Steel strength in tension of single insert, seismic	$N_{sa,insert,eq}$	lb (kN)	3,545 (15.8)	6,535 (29.1)	3,085 (13.7)	9,005 (40.1)	3,545 (18.1)	7,515 (33.4)	9,005 (40.1)	9,005 (40.1)	9,005 (40.1)	8,630 (38.4)	16,610 (73.9)		17,100 (76.1)	
Reduction factor, steel strength in tension	ϕ	-	0.65		0.65							0.65				
CONCRETE BREAKOUT STRENGTH IN TENSION (ACI 318-19 17.6.2, ACI 318-14 17.4.2 or ACI 318-11 D.5.2)																
Effectiveness factor for cracked concrete	k_c	-	24 (for SI use a value of 10)													
Modification factor for uncracked concrete	$\Psi_{C,N}$	-	1.25													
Reduction factor, concrete strength in tension	ϕ	-	0.70													
STEEL STRENGTH IN SHEAR (ACI 318-19 17.7.1, ACI 318-14 17.5.1 or ACI 318-11 Section D.6.1)																
Steel strength in shear of single insert	$V_{sa,insert,deck}$	lb (kN)	985 (4.4)	2,835 (12.6)	910 (4.1)	4,220 (18.8)	1,775 (7.9)	4,220 (18.8)	7,180 (31.9)	3,475 (15.5)	7,180 (31.9)	3,720 (16.2)	9,410 (41.9)	10,570 (47.0	10,965 (48.8)	
Steel strength in shear of single insert, seismic	$V_{sa,insert,eq}$	lb (kN)	385 (1.7)	625 (2.8)	365 (1.6)	4,220 (18.8)	480 (2.1)	715 (3.2)	7,180 (31.9)	695 (3.1)	7,180 (31.9)	1,080 (4.8)	4,705 (20.9)	10,570 (47.0)	4,385 (19.1)	10,965 (48.8)
Reduction factor, steel strength in shear	ϕ	-	0.60		0.60							0.60				
CONCRETE BREAKOUT STRENGTH IN SHEAR (ACI 318-19 17.7.2, ACI 318-14 17.5.2 or ACI 318-11 D.6.2) AND PRYOUT STRENGTH IN SHEAR (ACI 318-19 17.7.3, ACI 318-14 17.5.3 or ACI 318-11 D.6.3)																
Load bearing length of insert	l_e	in. (mm)	1.25 (32)		1.75 (45)							2.25 (57)				
Reduction factor, concrete strength in shear	ϕ	-	0.70		0.70							0.70				
Coefficient for pryout strength	k_{cp}	-	1		1							1				
Reduction factor, pryout strength in shear	ϕ	-	0.70		0.70							0.70				

1. Concrete must have a compressive strength f 'c of 2,500 psi minimum. Installation must comply with published instructions.
2. Design of headed cast-in specialty inserts shall be in accordance with the provisions of ACI 318 (-19 and -14) Chapter 17 or ACI 318-11 Appendix D, as applicable, for cast-in headed anchors. Concrete breakout strength must also be in accordance with and steel deck figures, as applicable.
3. Strength reduction factors for the inserts shall be taken from ACI 318-19 17.5.3, ACI 318-14 17.3.3 or ACI 318-11 D.4.3, as applicable, for cast-in headed anchors. Strength reduction factors for load combinations in accordance with ACI 318 (-19 and -14) 5.3 or ACI 318-11 9.2, as applicable, governed by steel strength of the insert are tabulated. Strength reduction values correspond to brittle steel elements. The value of ϕ applies when the load combinations of 2021 IBC Section 1605.1 or 2018, 2015 and 2012 IBC 1605.2, ACI 318 (-19 or -14) Section 5.3 or ACI 318-11 9.2, as applicable, are used in accordance with ACI 318-14 17.3.3 or ACI 318-11 D.4.3, as applicable. If the load combinations of ACI 318-11 Appendix C are used, the appropriate value of ϕ must be determined in accordance with ACI 318-11 D.4.4.
4. Minimum spacing distance between anchors and minimum edge distances for cast-in headed anchors shall be in accordance with ACI 318-19 17.9, ACI 318-14 17.7 or ACI 318-11 D.8, as applicable and the installation tables for the inserts.
5. The strengths shown in the table are for inserts only. Design professional is responsible for checking threaded rod strength in tension, shear, and combined tension and shear, as applicable. See steel design information for common threaded rod elements.

Design Information for Wood-Knocker II+ and Pan-Knocker II+ Push-In Thread Inserts[1,2,3,4,5]

Design Information	Symbol	Units	3/8"	1/2"
Outside diameter of the steel insert body	d_a	in. (mm)	1.0 (25)	1.125 (29)
Insert head plate net bearing area	A_{brg}	in² (mm²)	2.0 (1290)	2.7 (1742)
Effective embedment depth	h_{ef}	in. (mm)	1.7 (43)	2.0 (51)
STEEL STRENGTH IN TENSION (ACI 318-19 17.6.1, ACI 318-14 17.4.1 or ACI 318-11 Section D.5.1)				
Steel strength in tension of single insert	$N_{sa,insert}$	lb (kN)	11,265 (50.1)	17,595 (78.3)
Steel strength in tension of single insert, seismic	$N_{sa,insert,eq}$	lb (kN)	11,265 (50.1)	17,595 (7.3)
Reduction factor, steel strength in tension	ϕ	-	0.65	
CONCRETE BREAKOUT STRENGTH IN TENSION (ACI 318-19 17.6.2, ACI 318-14 17.4.2 or ACI 318-11 D.5.2)				
Effectiveness factor for cracked concrete	k_c	-	24 (for SI use a value of 10)	
Modification factor for uncracked concrete	$\Psi_{c,N}$	-	1.25	
Reduction factor, concrete strength in tension	ϕ	-	0.70	
STEEL STRENGTH IN SHEAR (ACI 318-19 17.7.1, ACI 318-14 17.5.1 or ACI 318-11 Section D.6.1)				
Steel strength in shear of single insert	$V_{sa,insert,deck}$	lb (kN)	3,625 (16.1)	5,955 (26.5)
Steel strength in shear of single insert, seismic	$V_{sa,insert,eq}$	lb (kN)	3,625 (16.1)	5,955 (26.5)
Reduction factor, steel strength in shear	ϕ	-	0.60	
CONCRETE BREAKOUT STRENGTH IN SHEAR (ACI 318-19 17.7.2, ACI 318-14 17.5.2 or ACI 318-11 D.6.2) AND PRYOUT STRENGTH IN SHEAR (ACI 318-19 17.7.3, ACI 318-14 17.5.3 or ACI 318-11 D.6.3)				
Load bearing length of insert	l_e	in. (mm)	1.7 (43)	2.0 (51)
Reduction factor, concrete strength in shear	ϕ	-	0.70	
Coefficient for pryout strength	k_{cp}	-	1	
Reduction factor, pryout strength in shear	ϕ	-	0.70	

1. Concrete must have a compressive strength f 'c of 2,500 psi minimum. Installation must comply with published instructions.
2. Design of headed cast-in specialty inserts shall be in accordance with the provisions of ACI 318 (-19 and -14) Chapter 17 or ACI 318-11 Appendix D, as applicable, for cast-in headed anchors. Concrete breakout strength must also be in accordance with and steel deck figures, as applicable.
3. Strength reduction factors for the inserts shall be taken from ACI 318-19 17.5.3, ACI 318-14 17.3.3 or ACI 318-11 D.4.3, as applicable, for cast-in headed anchors. Strength reduction factors for load combinations in accordance with ACI 318 (-19 and -14) 5.3 or ACI 318-11 9.2, as applicable, governed by steel strength of the insert are tabulated. Strength reduction values correspond to brittle steel elements. The value of ϕ applies when the load combinations of 2021 IBC Section 1605.1 or 2018, 2015 and 2012 IBC 1605.2, ACI 318 (-19 or -14) Section 5.3 or ACI 318-11 9.2, as applicable, are used in accordance with ACI 318-19 17.5.3, ACI 318-14 17.3.3 or ACI 318-11 D.4.3, as applicable. If the load combinations of ACI 318-11 Appendix C are used, the appropriate value of ϕ must be determined in accordance with ACI 318-11 D.4.4.
4. Minimum spacing distance between anchors and minimum edge distances for cast-in headed anchors shall be in accordance with ACI 318-19 17.9, ACI 318-14 17.7 or ACI 318-11 D.8, as applicable and the installation tables for the inserts.
5. The strengths shown in the table are for inserts only. Design professional is responsible for checking threaded rod strength in tension, shear, and combined tension and shear, as applicable. See steel design information for common threaded rod elements.

Specifications And Physical Properties Of Common Carbon Steel Threaded Rod Elements[1]

Threaded Rod Specification		Units	Min. Specified Ultimate Strength, F_{uta}	Min. Specified Yield Strength 0.2 Percent Offset, F_{ya}	$\frac{F_{uta}}{F_{ya}}$	Elongation Minimum Percent[4]	Reduction Of Area Min. Percent	Related Nut Specification[5]
Carbon Steel	ASTM A36/A36M or ASTM F1554 Grade 36	psi (MPa)	58,000 (400)	36,000 (248)	1.61	23	40 (50 for A36)	ASTM A563 Gr. A or A194 Grade 2
	ASTM A193/A193M[3] Grade B7	psi (MPa)	125,000 (860)	105,000 (720)	1.19	16	50	ASTM A563 Gr. A or A194 Grade 2

For SI: 1 inch = 25.4 mm, 1 psi = 0.006897 MPa. For pound-inch units: 1 mm = 0.03937 inch, 1 MPa = 145.0 psi.

1. Inserts may be used in conjunction with all grades of continuously threaded carbon steels (all-thread) that comply with code reference standards and that have thread characteristics comparable with ANSI B1.1 UNC Coarse Thread Series.
2. Standard Specification for Carbon Structural Steel.
3. Standard Specification for Alloy-Steel and Stainless Steel Bolting Materials for High Temperature or High Pressure Service and Other Special Purpose Applications.
4. Based on 2-inch (50 mm) gauge length except for ASTM A36/A36M and ASTM A193, which are based on a gauge length of 4d (d_{rod}).
5. Where nuts are applicable, nuts of other grades and style having specified proof load stress greater than the specified grade and style are also suitable.

Steel Design Information For Common Threaded Rod Elements Used With Concrete Inserts[1,2,3,4]

Design Information		Symbol	Units	1/4-inch	3/8-inch	1/2-inch	5/8-inch	3/4-inch
Threaded rod nominal outside diameter		d_{rod}	in. (mm)	0.250 (6.4)	0.375 (9.5)	0.500 (12.7)	0.625 (15.9)	0.750 (19.1)
Threaded rod effective cross-sectional area		A_{se}	in² (mm²)	0.032 (21)	0.078 (50)	0.142 (92)	0.226 (146)	0.335 (216)
Steel strength in tension of threaded rod	ASTM A36 or F1554, Grade 36	$N_{sa,rod,A36}$	lb (kN)	1,855 (8.2)	4,525 (20.0)	8,235 (36.6)	13,110 (58.3)	19,430 (86.3)
Steel strength in tension of threaded rod, seismic	ASTM A36 or F1554, Grade 36	$N_{sa,rod,eq,A36}$	lb (kN)	1,855 (8.2)	4,525 (20.0)	8,235 (36.6)	13,110 (58.3)	19,430 (86.4)
Steel strength in tension of threaded rod	ASTM A193, Gr. B7	$N_{sa,rod,B7}$	lb (kN)	4,000 (17.7)	9,750 (43.1)	17,750 (78.9)	28,250 (125.7)	41,875 (186.0)
Steel strength in tension of threaded rod, seismic	ASTM A193, Gr. B7	$N_{sa,rod,eq,B7}$	lb (kN)	4,000 (17.7)	9,750 (43.1)	17,750 (78.9)	28,250 (125.7)	41,875 (186.0)
Reduction factor, steel strength in tension		ϕ	-	0.75				
Steel strength in shear of threaded	ASTM A36 or F1554, Grade 36	$V_{sa,rod,A36}$	lb (kN)	1,115 (4.9)	2,715 (12.1)	4,940 (22.0)	7,865 (35.0)	11,660 (51.9)
Steel strength in shear of threaded rod, seismic	ASTM A36 or F1554, Grade 36	$V_{sa,rod,eq,A36}$	lb (kN)	780 (3.5)	1,900 (8.4)	3,460 (15.4)	5,505 (24.5)	8,160 (36.3)
Steel strength in shear of threaded rod	ASTM A193, Gr. B7	$V_{sa,rod,B7}$	lb (kN)	2,385 (10.6)	5,815 (25.9)	10,640 (7.3)	16,950 (75.4)	25,085 (111.6)
Steel strength in shear of threaded rod, seismic	ASTM A193, Gr. B7	$V_{sa,rod,eq,B7}$	lb (kN)	1,680 (7.5)	4,095 (18.2)	7,455 (34.2)	11,865 (52.8)	17,590 (78.2)
Reduction factor, steel strength in shear		ϕ	-	0.65				

For SI: 1 inch = 25.4 mm, 1 pound = 0.00445 kN, 1 in² = 645.2 mm². For pound-inch unit: 1 mm = 0.03937 inches.

1. Values provided for steel element material types based on minimum specified strengths and calculated in accordance with ACI 318-11 Eq. (D-2) and Eq. (D-29).
2. ϕN_{sa} shall be the lower of the $\phi N_{sa,rod}$ or $\phi N_{sa,insert}$ for static steel strength in tension; for seismic loading $\phi N_{sa,eq}$ shall be the lower of the $\phi N_{sa,rod,eq}$ or $\phi N_{sa,insert,eq}$.
3. ϕV_{sa} shall be the lower of the $\phi V_{sa,rod}$ or $\phi V_{sa,insert}$ for static steel strength in tension; for seismic loading $\phi V_{sa,eq}$ shall be the lower of the $\phi V_{sa,rod,eq}$ or $\phi V_{sa,insert,eq}$.
4. Strength reduction factors shall be taken from ACI 318-19 17.5.3, ACI 318-14 17.3.3 or ACI 318-11 D.4.3 for steel elements. Condition B is assumed. Strength reduction factors for load combinations in accordance with ACI 318 (-19 and -14) Section 5.3 or ACI 318-11 Section 9.2 governed by steel strength of the threaded rod are taken as 0.75 for tension and 0.65 for shear; values correspond to ductile steel elements. The value of ø applies when the load combinations of 2021 IBC Section 1605.1 or 2018, 2015 and 2012 IBC 1605.2, ACI 318 (-19 or -14) Section 5.3 or ACI 318-11 Section 9.2 are used in accordance with ACI 318-19 17.5.3, ACI 318-14 17.3.3 or ACI 318-11 D.4.3. If the load combinations of ACI 318-11 Appendix C are used, then the appropriate value of ø must be determined in accordance with ACI 318-11 D4.4.

DESIGN STRENGTH TABLES (SD)

Tension and Shear Design Strengths for Wood-Knocker II+ and Pan-Knocker II+ Single Thread Inserts Installed in Form Poured Concrete and Roof Members - Uncracked Concrete[1,2,3,4,5,6,7]

Nominal Anchor Diameter (in.)	Embed. Depth h_{ef} (in.)	Minimum Concrete Compressive Strength					
		f'c = 3,000 psi		f'c = 4,000 psi		f'c = 6,000 psi	
		ϕN_n Tension (lbs.)	ϕV_n Shear (lbs.)	ϕN_n Tension (lbs.)	ϕV_n Shear (lbs.)	ϕN_n Tension (lbs.)	ϕV_n Shear (lbs.)
1/4" (LP)	1-1/4	1,605	590	1,855	590	2,275	590
3/8" (LP)	1-1/4	1,605	1,235	1,855	1,425	2,275	1,700
1/4"	1-3/4	2,665	2,420	3,075	2,795	3,765	3,425
3/8"	1-3/4	2,665	2,420	3,075	2,795	3,765	3,425
1/2"	1-3/4	2,665	2,420	3,075	2,795	3,765	3,425
5/8"	1-3/4	2,665	2,665	3,075	3,075	3,765	3,765
3/4"	1-3/4	2,665	2,665	3,075	3,075	3,765	3,765

☐ - Anchor Pullout/Pryout Strength Controls ☐ - Concrete Breakout Strength Controls ■ - Steel Strength Controls

Tension and Shear Design Strengths for Wood-Knocker II+ and Pan-Knocker II+ Single Thread Inserts Installed in Form Poured Concrete and Roof Members - Cracked Concrete[1,2,3,4,5,6,7,8]

Nominal Anchor Diameter (in.)	Embed. Depth h_{ef} (in.)	Minimum Concrete Compressive Strength					
		f'c = 3,000 psi		f'c = 4,000 psi		f'c = 6,000 psi	
		ϕN_n Tension (lbs.)	ϕV_n Shear (lbs.)	ϕN_n Tension (lbs.)	ϕV_n Shear (lbs.)	ϕN_n Tension (lbs.)	ϕV_n Shear (lbs.)
1/4" (LP)	1-1/4	1,285	590	1,485	590	1,820	590
3/8" (LP)	1-1/4	1,285	885	1,485	1,020	1,820	1,250
1/4"	1-3/4	2,130	1,730	2,460	2,000	3,015	2,445
3/8"	1-3/4	2,130	1,730	2,460	2,000	3,015	2,445
1/2"	1-3/4	2,130	1,730	2,460	2,000	3,015	2,445
5/8"	1-3/4	2,130	2,130	2,460	2,460	3,015	3,015
3/4"	1-3/4	2,130	2,130	2,460	2,460	3,015	3,015

☐ - Anchor Pullout/Pryout Strength Controls ☐ - Concrete Breakout Strength Controls ■ - Steel Strength Controls

1- Tabular values are provided for illustration and are applicable for single anchors installed in normal-weight concrete with minimum slab thickness, $h_a = h_{min}$, and with the following conditions:
- No edge distance influence ($c_{a1} \geq 1.5h_{ef}$) and no side-face blowout in tension.
- No edge distance ($c_{a1} \geq 3h_{ef}$) or corner distance influence ($c_{a2} \geq 1.5c_{a1}$) in shear.

2- Calculations were performed following methodology in ACI 318-19 17.5.3, ACI 318 (-19 and -14) Chapter 17 or ACI 318-11 Appendix D. The load level corresponding to the failure mode listed [steel strength of insert ($N_{sa,insert}$, $V_{sa,insert}$), concrete breakout strength, or pryout strength] must be checked against the tabulated steel strength of the corresponding threaded rod type, ($N_{sa,rod}$, $V_{sa,rod}$), the lowest load level controls.

3- Strength reduction factors shall be taken from ACI 318-14 17.3.3 or ACI 318-11 D.4.3 for cast-in headed anchors. Condition B is assumed. Strength reduction factors for load combinations in accordance with ACI 318 (-19 and -14) Section 5.3 or ACI 318-11 Section 9.2 governed by steel strength of the insert are taken as 0.65 for tension and 0.60 for shear; values correspond to brittle steel elements.

4- Tabular values are permitted for static loads only, seismic loading is not considered with these tables.

5- For designs that include combined tension and shear, the interaction of tension and shear loads must be calculated in accordance with ACI 318 (-19 and -14) Chapter 17 or ACI 318-11 Appendix D.

6- Interpolation is not permitted to be used with the tabular values. For intermediate base material compressive strengths please see ACI 318 (-19 and -14) Chapter 17 or ACI 318-11 Appendix D and information contained in this product supplement. For other design conditions including seismic considerations please see ACI 318 (-19 and -14) Chapter 17 or ACI 318-11 Appendix D.

7- For lightweight concrete, where concrete breakout or anchor pullout/pryout strength controls, the tabulated values must be multiplied by 0.85 for sand-lightweight and 0.75 for all-lightweight, as applicable.

8- For seismic design in accordance with ACI 318, the tabulated tension design strengths for concrete breakout and pullout must be multiplied by a factor of 0.75.

TECHNICAL GUIDE – MECHANICAL ANCHORS ©2023 DEWALT – REV. K

Tension and Shear Design Strengths for Wood-Knocker II+ and Pan-Knocker II+ Multi Thread Inserts Installed in Form Poured Concrete and Roof Members - Uncracked Concrete[1,2,3,4,5,6,7]

Nominal Anchor Diameter (in.)	Embed. Depth h_{ef} (in.)	Minimum Concrete Compressive Strength					
		f'c = 3,000 psi		f'c = 4,000 psi		f'c = 6,000 psi	
		ϕNn Tension (lbs.)	ϕVn Shear (lbs.)	ϕNn Tension (lbs.)	ϕVn Shear (lbs.)	ϕNn Tension (lbs.)	ϕVn Shear (lbs.)
1/4" (1/4 - 3/8" Multi LP)	1-1/4	1,605	590	1,855	590	2,275	590
3/8" (1/4 - 3/8" Multi LP)	1-1/4	1,605	1,235	1,855	1,425	2,275	1,700
1/4" (1/4 - 3/8" Multi)	1-3/4	2,005	545	2,005	545	2,005	545
3/8" (1/4 - 3/8" Multi)	1-3/4	2,665	2,420	3,075	2,530	3,765	2,530
1/4" (1/4 - 3/8 - 1/2" Multi)	1-3/4	2,305	1,065	2,305	1,065	2,305	1,065
3/8" (1/4 - 3/8 - 1/2" Multi)	1-3/4	2,665	2,420	3,075	2,530	3,765	2,530
1/2" (1/4 - 3/8 - 1/2" Multi)	1-3/4	2,665	2,420	3,075	2,795	3,765	3,425
3/8" (3/8 - 1/2" Multi)	1-3/4	2,665	2,085	3,075	2,085	3,765	2,085
1/2" (3/8 - 1/2" Multi)	1-3/4	2,665	2,420	3,075	2,795	3,765	3,425
3/8" (3/8 - 1/2 - 5/8" Multi)	2-1/4	3,880	2,230	4,485	2,230	5,490	2,230
1/2" (3/8 - 1/2 - 5/8" Multi)	2-1/4	3,880	3,880	4,485	4,485	5,490	5,490
5/8" (3/8 - 1/2 - 5/8" Multi)	2-1/4	3,880	3,880	4,485	4,485	5,490	5,490
5/8" (5/8 - 3/4" Multi)	2-1/4	3,880	3,880	4,485	4,485	5,490	5,490
3/4" (5/8 - 3/4" Multi)	2-1/4	3,880	3,880	4,485	4,485	5,490	5,490

□ - Anchor Pullout/Pryout Strength Controls ■ - Concrete Breakout Strength Controls ■ - Steel Strength Controls

Tension and Shear Design Strengths for Wood-Knocker II+ and Pan-Knocker II+ Multi Thread Inserts Installed in Form Poured Concrete and Roof Members - Cracked Concrete[1,2,3,4,5,6,7,8]

Nominal Anchor Diameter (in.)	Embed. Depth h_{ef} (in.)	Minimum Concrete Compressive Strength					
		f'c = 3,000 psi		f'c = 4,000 psi		f'c = 6,000 psi	
		ϕNn Tension (lbs.)	ϕVn Shear (lbs.)	ϕNn Tension (lbs.)	ϕVn Shear (lbs.)	ϕNn Tension (lbs.)	ϕVn Shear (lbs.)
1/4" (1/4 - 3/8" Multi LP)	1-1/4	1,285	590	1,485	590	1,820	590
3/8" (1/4 - 3/8" Multi LP)	1-1/4	1,285	885	1,485	1,020	1,820	1,250
1/4" (1/4 - 3/8" Multi)	1-3/4	2,005	545	2,005	545	2,005	545
3/8" (1/4 - 3/8" Multi)	1-3/4	2,130	1,730	2,460	2,000	3,015	2,445
1/4" (1/4 - 3/8 - 1/2" Multi)	1-3/4	2,130	1,065	2,305	1,065	2,305	1,065
3/8" (1/4 - 3/8 - 1/2" Multi)	1-3/4	2,130	1,730	2,460	2,000	3,015	2,445
1/2" (1/4 - 3/8 - 1/2" Multi)	1-3/4	2,130	1,730	2,460	2,000	3,015	2,445
3/8" (3/8 - 1/2" Multi)	1-3/4	2,130	1,730	2,460	2,000	3,015	2,085
1/2" (3/8 - 1/2" Multi)	1-3/4	2,130	1,730	2,460	2,000	3,015	2,445
3/8" (3/8 - 1/2 - 5/8" Multi)	2-1/4	3,105	2,230	3,585	2,230	4,390	2,230
1/2" (3/8 - 1/2 - 5/8" Multi)	2-1/4	3,105	2,895	3,585	3,340	4,390	4,090
5/8" (3/8 - 1/2 - 5/8" Multi)	2-1/4	3,105	2,895	3,585	3,340	4,390	4,090
5/8" (5/8 - 3/4" Multi)	2-1/4	3,105	2,895	3,585	3,340	4,390	4,090
3/4" (5/8 - 3/4" Multi)	2-1/4	3,105	2,895	3,585	3,340	4,390	4,090

□ - Anchor Pullout/Pryout Strength Controls ■ - Concrete Breakout Strength Controls ■ - Steel Strength Controls

1- Tabular values are provided for illustration and are applicable for single anchors installed in normal-weight concrete with minimum slab thickness, $h_a = h_{min}$, and with the following conditions:
- No edge distance influence ($c_{a1} \geq 1.5h_{ef}$) and no side-face blowout in tension.
- No edge distance ($c_{a1} \geq 3h_{ef}$) or corner distance influence ($c_{a2} \geq 1.5c_{a1}$) in shear.

2- Calculations were performed following methodology in ACI 318 (-19 and -14) Chapter 17 or ACI 318-11 Appendix D. The load level corresponding to the failure mode listed [steel strength of insert ($N_{sa,insert}$, $V_{sa,insert}$), concrete breakout strength, or pryout strength] must be checked against the tabulated steel strength of the corresponding threaded rod type, ($N_{sa,rod}$, $V_{sa,rod}$), the lowest load level controls.

3- Strength reduction factors shall be taken from ACI 318-19 17.5.3, ACI 318-14 17.3.3 or ACI 318-11 D.4.3 for cast-in headed anchors. Condition B is assumed. Strength reduction factors for load combinations in accordance with ACI 318 (-19 and -14) Section 5.3 or ACI 318-11 Section 9.2 governed by steel strength of the insert are taken as 0.65 for tension and 0.60 for shear; values correspond to brittle steel elements.

4- Tabular values are permitted for static loads only, seismic loading is not considered with these tables.

5- For designs that include combined tension and shear, the interaction of tension and shear loads must be calculated in accordance with ACI 318 (-19 and -14) Chapter 17 or ACI 318-11 Appendix D.

6- Interpolation is not permitted to be used with the tabular values. For intermediate base material compressive strengths please see ACI 318 (-19 and -14) Chapter 17 or ACI 318-11 Appendix D and information contained in this product supplement. For other design conditions including seismic considerations please see ACI 318 (-19 and -14) Chapter 17 or ACI 318-11 Appendix D.

7- For lightweight concrete, where concrete breakout or anchor pullout/pryout strength controls, the tabulated values must be multiplied by 0.85 for sand-lightweight and 0.75 for all-lightweight, as applicable.

8- For seismic design in accordance with ACI 318, the tabulated tension design strengths for concrete breakout and pullout must be multiplied by a factor of 0.75.

Tension and Shear Design Strengths for Wood-Knocker II+ and Pan-Knocker II+ Push-In Thread Inserts Installed in Form Poured Concrete and Roof Members - Uncracked Concrete[1,2,3,4,5,6,7]

Nominal Anchor Diameter (in.)	Embed. Depth h_{ef} (in.)	Minimum Concrete Compressive Strength					
		f'c = 3,000 psi		f'c = 4,000 psi		f'c = 6,000 psi	
		ϕN_n Tension (lbs.)	ϕV_n Shear (lbs.)	ϕN_n Tension (lbs.)	ϕV_n Shear (lbs.)	ϕN_n Tension (lbs.)	ϕV_n Shear (lbs.)
3/8" Push-In	1.70	2,550	2,175	2,945	2,175	3,605	2,175
1/2" Push-In	2.00	3,255	3,255	3,755	3,575	4,600	3,575

☐ - Anchor Pullout/Pryout Strength Controls ☐ - Concrete Breakout Strength Controls ■ - Steel Strength Controls

Tension and Shear Design Strengths for Wood-Knocker II+ and Pan-Knocker II+ Push-In Thread Inserts Installed in Form Poured Concrete and Roof Members - Cracked Concrete[1,2,3,4,5,6,7,8]

Nominal Anchor Diameter (in.)	Embed. Depth h_{ef} (in.)	Minimum Concrete Compressive Strength					
		f'c = 3,000 psi		f'c = 4,000 psi		f'c = 6,000 psi	
		ϕN_n Tension (lbs.)	ϕV_n Shear (lbs.)	ϕN_n Tension (lbs.)	ϕV_n Shear (lbs.)	ϕN_n Tension (lbs.)	ϕV_n Shear (lbs.)
3/8" Push-In	1.70	2,040	2,040	2,355	2,175	2,885	2,175
1/2" Push-In	2.00	2,605	2,605	3,005	3,005	3,680	3,575

☐ - Anchor Pullout/Pryout Strength Controls ☐ - Concrete Breakout Strength Controls ■ - Steel Strength Controls

1- Tabular values are provided for illustration and are applicable for single anchors installed in normal-weight concrete with minimum slab thickness, $h_a = h_{min}$, and with the following conditions:
- No edge distance influence ($c_{a1} \geq 1.5h_{ef}$) and no side-face blowout in tension.
- No edge distance ($c_{a1} \geq 3h_{ef}$) or corner distance influence ($c_{a2} \geq 1.5c_{a1}$) in shear.

2- Calculations were performed following methodology in ACI 318 (-19 and -14) Chapter 17 or ACI 318-11 Appendix D. The load level corresponding to the failure mode listed [steel strength of insert ($N_{sa,insert}$, $V_{sa,insert}$), concrete breakout strength, or pryout strength] must be checked against the tabulated steel strength of the corresponding threaded rod type, ($N_{sa,rod}$, $V_{sa,rod}$), the lowest load level controls.

3- Strength reduction factors shall be taken from ACI 318-19 17.5.3, ACI 318-14 17.3.3 or ACI 318-11 D.4.3 for cast-in headed anchors. Condition B is assumed. Strength reduction factors for load combinations in accordance with ACI 318 (-19 and -14) Section 5.3 or ACI 318-11 Section 9.2 governed by steel strength of the insert are taken as 0.65 for tension and 0.60 for shear; values correspond to brittle steel elements.

4- Tabular values are permitted for short-term static loads only, seismic loading is not considered with these tables.

5- For designs that include combined tension and shear, the interaction of tension and shear loads must be calculated in accordance with ACI 318 (-19 and -14) Chapter 17 or ACI 318-11 Appendix D.

6- Interpolation is not permitted to be used with the tabular values. For intermediate base material compressive strengths please see ACI 318 (-19 and -14) Chapter 17 or ACI 318-11 Appendix D and information contained in this product supplement. For other design conditions including seismic considerations please see ACI 318 (-19 and -14) Chapter 17 or ACI 318-11 Appendix D.

7- For lightweight concrete, where concrete breakout or anchor pullout/pryout strength controls, the tabulated values must be multiplied by 0.85 for sand-lightweight and 0.75 for all-lightweight, as applicable.

8- For seismic design in accordance with ACI 318, the tabulated tension design strengths for concrete breakout and pullout must be multiplied by a factor of 0.75.

Tension and Shear Design Strength of Steel Elements (Steel Strength)[1,2,3,4]

Nominal Rod Diameter (in.)	Steel Elements - Threaded Rod			
	ASTM A36		ASTM A193 Grade B7	
	$\phi N_{sa,rod}$ Tension (lbs.)	$\phi V_{sa,rod}$ Shear (lbs.)	$\phi N_{sa,rod}$ Tension (lbs.)	$\phi V_{sa,rod}$ Shear (lbs.)
1/4	1,390	720	3,000	1,550
3/8	3,395	1,750	7,315	3,780
1/2	6,175	3,210	13,315	6,915
5/8	9,835	5,115	21,190	11,020
3/4	14,550	7,565	31,405	16,305

■ - Steel Strength Controls

1. Steel tensile design strength according to ACI 318 Appendix D and ACI 318 Chapter 17, $\phi N_{sa} = \phi \bullet A_{se,N} \bullet f_{uta}$
2. The tabulated steel design strength in tension for the threaded rod must be checked against the design strength of the steel insert, concrete breakout and pullout design strength to determine the controlling failure mode, the lowest load level controls.
3. Steel shear design strength according to ACI 318 Appendix D and ACI 318 Chapter 17, $\phi V_{sa} = \phi \bullet 0.60 \bullet A_{se,N} \bullet f_{uta}$
4. The tabulated steel design strength in shear for the threaded rod must be checked against the design strength of the steel insert, concrete breakout and pryout design strength to determine the controlling failure mode, the lowest load level controls.

ORDERING INFORMATION

Wood-Knocker®II+ Form Insert (UNC internal thread)

Cat. No.	Description	Color Code	Pack Qty.
PFM2500014	1/4" Wood-Knocker II+ LP (Low Profile)	Brown	100
PFM2500038	3/8" Wood-Knocker II+ LP (Low Profile)	Green	100
PFM2521100	1/4" Wood-Knocker II+	Brown	100
PFM2521150	3/8" Wood-Knocker II+	Green	100
PFM2521200	1/2" Wood-Knocker II+	Yellow	100
PFM2521250	5/8" Wood-Knocker II+	Red	100
PFM2521300	3/4" Wood-Knocker II+	Purple	100
PFM2501438	1/4-3/8" Wood-Knocker II+ Multi LP (Low Profile)	White	100
PFM2521438	1/4-3/8" Wood-Knocker II+ Multi	White	100
PFM2521350	3/8-1/2" Wood-Knocker II+ Multi	Gray	100
PFM253143812	1/4-3/8-1/2" Wood-Knocker II+ Multi	Aqua	100
PFM253381258	3/8-1/2-5/8" Wood-Knocker II+ Multi	Orange	50
PFM2525834	5/8-3/4" Wood-Knocker II+ Multi	Black	50
PFM2610038	3/8" Wood-Knocker II+ Push-In Thread	Green	50
PFM2610012	1/2" Wood-Knocker II+ Push-In Thread	Yellow	50

Inserts are color coded to easily identify location, type and sizes of the internal diameters.

Wood-Knocker II+ Installation Accessories and Tools

Cat. No.	Description	Pack Qty.
PFM3612000	Wood-Knocker II+ Installation Tool	1
DWHT51439	16oz Steel Curve Claw Hammer	1

The Wood-Knocker II+ installation tool features a magnetic end to help hold the insert and assist in placement.

Pan-Knocker II+ Form Insert (UNC internal thread)

Cat. No.	Description	Color Code	Pack Qty.
PFM2501438NN	1/4-3/8" Pan-Knocker II+ Multi LP (Low Profile)	White	100
PFM253143812NN	1/4-3/8-1/2" Pan-Knocker II+ Multi	Aqua	100
PFM253381258NN	3/8-1/2-5/8" Pan-Knocker II+ Multi	Orange	100
PFM2525834NN	5/8-3/4" Pan-Knocker II+ Multi	Black	100
PFM2610038NN	3/8" Pan-Knocker II+ Push-In Thread	Green	50
PFM2610012NN	1/2" Pan-Knocker II+ Push-In Thread	Yellow	50

Pan-Knocker II+ form inserts must be mounted (e.g. screwed, pinned) to the form work. Fasteners are not included.

Pan-Knocker II+ Cordless Concrete Nailer Installation Tool and Pins

Cat. #	Description					Pack Qty.	Carton Qty.
DCN891P2	20V Max* Cordless Concrete Nailer Kit					1	-
Cat. #	**Shank Dia. in.**	**Step Dia. in.**	**Length in.**	**Knurl (K)**	**Finish**	**Pack Qty.**	**Carton Qty.**
DCN8907804	0.102"	0.088"	0.780"	Yes	Zinc	1000	6000

Fasteners have a head diameter of .250" and are zinc plated in accordance with ASTM B695, Class 5.

Pan-Knocker II+ Gas Fastening Nailer Installation Tool and Pins

Cat. #	Description					Pack Qty.	Carton Qty.
55142-PWR	Trak-It C5 Tool W/Deep Track (1-1/4" Pin)					1	-
Cat. #	**Shank Dia. in.**	**Step Dia. in.**	**Length in.**	**Knurl (K)**	**Finish**	**Pack Qty.**	**Carton Qty.**
55330-PWR	0.120"	0.102"	0.730"	Yes	Zinc	800	4000
55342-PWR	0.102"	0.088"	0.780"	Yes	Zinc	800	4000

Fasteners have a head diameter of .250" and are zinc plated in accordance with ASTM B695, Class 5.

Push-In Thread Couplers

Cat. No.	Description	Pack Qty.
PFM3613038	3/8"-16 Coupler Push-In Thread	20
PFM3613012	1/2"-13 Coupler Push-In Thread	20

Push-In couplers have one end that does not require turning threaded rod elements during installation which can be ideal for applications such as mounting prefabricated hardware and hanger assemblies.

Seismic Brace Report

Project Name	M - Cogen
Date	02/16/2026

APPROVAL STAMP

- ☐ Approved
- ☐ Approved as Noted
- ☐ Not Approved

Remarks:

Standard	NFPA 13-2022

BRACE SUMMARY

Brace Name	Drawing Reference	Seismic Design Load	Structure	Brace Description	Fastener	Attachments
M - Cogen		468 lbf.	Lightweight Cracked Concrete - 4000 psi - 2" & 3" W Metal Deck - Hilti	Lateral Orientation B & C 45° - 90° 1 NPS Sch 40	1/2" KWIK Bolt TZ2	AF700 - 1/2" AF035 - 6 NPS x 1 NPS
M - Cogen		376 lbf.	Lightweight Cracked Concrete - 4000 psi - 2" & 3" W Metal Deck - Hilti	Longitudinal Orientation B & C 45° - 90° 1 NPS Sch 40	1/2" KWIK Bolt TZ2	AF700 - 1/2" AF775 - 6 NPS x 1 NPS
M - Cogen		474 lbf.	Horizontal Beam Flange	Lateral Orientation 45° - 90° 1 NPS Sch 40		AF778 AF700 - 1/2" AF035 - 3 NPS x 1 NPS
M - Cogen		121 lbf.	Horizontal Beam Flange	Longitudinal Orientation 45° - 90° 1 NPS Sch 40		AF772 Type A AF700 - 1/2" AF775 - 3 NPS x 1 NPS

NOTE: Per NFPA 13-2022, all load capacities listed for fasteners installed in cracked concrete have been reduced based on the prying factors listed for ASC's swivel attachments. Prying factors for NFPA fastener orientations “A” through “I” may be found in ASC's individual product submittal at asc-es.com

NFPA 13-2016 Product loads incorporate a minimum safety factor of 1.5. NFPA 13-2019 FM Product loads have been reduced to include a safety factor of 2.2 unless noted in the applicable product submittal.

The products specified within this report are limited to the capability of the sway brace assembly alone to resist the calculated seismic force resulting from user input . Point loads applied to structural elements as a result of seismic forces are not evaluated by the software. The seismic load rating of the fastener attached to a structural element is determined by one of the following: NFPA 13, UL listing, FM Global approval, or other empirical testing. The review of the of the structural element(s) as a whole and/or the entire structure and its ability to resist the seismic load(s) is beyond the scope of these seismic calculations.

ASC MAKES NO WARRANTIES , EXPRESS, IMPLIED, STATUTORY, OR OTHERWISE, WITH RESPECT TO THE SOFTWARE OR THE SEISMIC CALCULATIONS, AND ASC SPECIFICALLY DISCLAIMS ANY IMPLIED WARRANTY OF MERCHANTABILITY OR FITNESS FOR A PARTICULAR PURPOSE.

M - COGEN - SEISMIC BRACE CALCULATIONS

Seismic Project	Morongo Cogen - Phase 2	**Brace Name**	M - Cogen
Standard	NFPA 13-2022	**Drawing Reference**	
Brace Type	Lateral	**Approval Agency**	FM Approved

STRUCTURE INFORMATION

Structure	Cracked Concrete
Substrate	Lightweight Cracked Concrete - 4000 psi - 2" & 3" W Metal Deck - Hilti
Load Orientation	N/A

BRACE INFORMATION

Brace Member	1 NPS Sch 40
Brace Length Max	7 ft 0 in
Brace Angle	45° - 90°
Least Radius of Gyration	0.421 in.
l/r Ratio Max	200
Max Horizontal Load	1,310 lbf.

FASTENER INFORMATION

Fastener Name	KWIK Bolt TZ2
Fastener Orientation	B & C
Fastener Diameter	1/2 in.
Nominal Embedment	3 in.
Effective Embedment	2 1/2 in.
Slab Thickness	2 1/2 in.
Edge Distance 1	1 1/4 in.
Max Horizontal Load	473 lbf.

SEISMIC BRACE ATTACHMENTS

	Model	Size	Adj. Load
Swivel Att.	AF700	1/2"	1,711 lbf.
Pipe Att.	AF035	6 NPS x 1 NPS	831 lbf.

See Appendix A for alternate seismic brace attachments.
All seismic brace attachments manufactured by ASC Engineered Solutions.

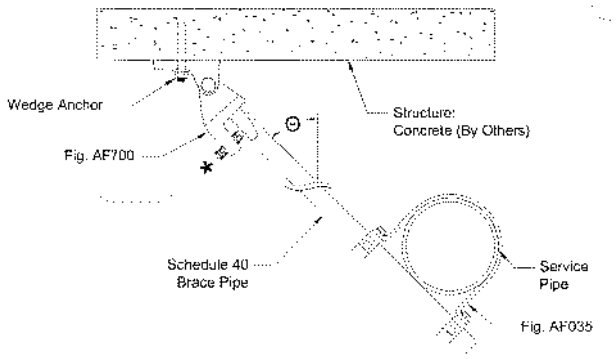

** - denotes hardware shown with the bolt head or nut broken off, as per the product installation instructions*
Net Vertical Reaction Forces do not need to be addressed per NFPA 13-2022.

SPRINKLER SYSTEM LOAD CALCULATION ($F_{PW} = C_P*W_P$)
$C_P = 0.944$

Qty	Line	Description	Pipe Size/Type	Length	Weight/ft	Weight/Line	Total Weight
1	Main	Braced Pipe	6 NPS Steel Sch 10	10.00 ft.	23.03 lb/ft.	230.30 lb.	230.30 lb.
1	Branch 1	Segment A	2 NPS Steel Sch 40	39.00 ft.	5.13 lb/ft.	200.07 lb.	200.07 lb.

Weakest Main Size	Spacing	Max Fpw
6 NPS Steel Sch 10	20 ft.	4,039 lbf.

Total System Weight	430.37 lb.
System Design Weight (W_p)	495.00 lb.
Horizontal Seismic Load (Fpw)	468 lbf.

M - COGEN - SEISMIC BRACE CALCULATIONS

Seismic Project	Morongo Cogen - Phase 2	**Brace Name**	M - Cogen
Standard	NFPA 13-2022	**Drawing Reference**	
Brace Type	Longitudinal	**Approval Agency**	FM Approved

STRUCTURE INFORMATION

Structure	Cracked Concrete
Substrate	Lightweight Cracked Concrete - 4000 psi - 2" & 3" W Metal Deck - Hilti
Load Orientation	N/A

BRACE INFORMATION

Brace Member	1 NPS Sch 40
Brace Length Max	7 ft 0 in
Brace Angle	45° - 90°
Least Radius of Gyration	0.421 in.
l/r Ratio Max	200
Max Horizontal Load	1,310 lbf.

FASTENER INFORMATION

Fastener Name	KWIK Bolt TZ2
Fastener Orientation	B & C
Fastener Diameter	1/2 in.
Nominal Embedment	3 in.
Effective Embedment	2 1/2 in.
Slab Thickness	2 1/2 in.
Edge Distance 1	1 1/4 in.
Max Horizontal Load	473 lbf.

SEISMIC BRACE ATTACHMENTS

	Model	Size	Adj. Load
Swivel Att.	AF700	1/2"	1,711 lbf.
Pipe Att.	AF775	6 NPS x 1 NPS	859 lbf.

See Appendix A for alternate seismic brace attachments.
All seismic brace attachments manufactured by ASC Engineered Solutions.

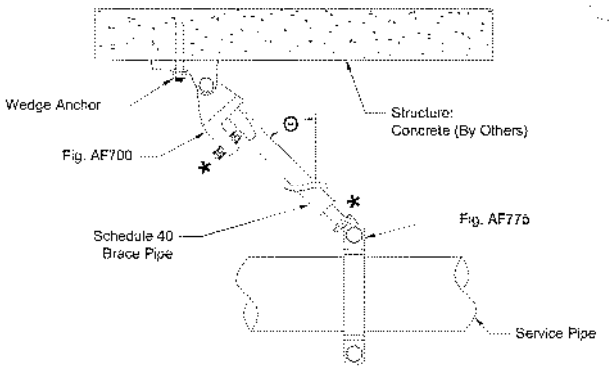

** - denotes hardware shown with the bolt head or nut broken off, as per the product installation instructions*
Net Vertical Reaction Forces do not need to be addressed per NFPA 13-2022.

SPRINKLER SYSTEM LOAD CALCULATION ($F_{PW} = C_P*W_P$)
$C_P = 0.944$

Qty	Line	Description	Pipe Size/Type	Length	Weight/ft	Weight/Line	Total Weight
1	Main	Braced Pipe	6 NPS Steel Sch 10	15.00 ft.	23.03 lb/ft.	345.45 lb.	345.45 lb.

Total System Weight	345.45 lb.
System Design Weight (W_p)	398.00 lb.
Horizontal Seismic Load (Fpw)	376 lbf.

M - COGEN - SEISMIC BRACE CALCULATIONS

Seismic Project	Morongo Cogen - Phase 2	**Brace Name**	M - Cogen
Standard	NFPA 13-2022	**Drawing Reference**	
Brace Type	Lateral	**Approval Agency**	FM Approved

STRUCTURE INFORMATION

Structure	I-Beam/Joist
Substrate	Horizontal Beam Flange
Thickness	0.13 in.-0.75 in.
Load Orientation	Parallel to Beam

BRACE INFORMATION

Brace Member	1 NPS Sch 40
Brace Length Max	7 ft 0 in
Brace Angle	45° - 90°
Least Radius of Gyration	0.421 in.
l/r Ratio Max	200
Max Horizontal Load	1,310 lbf.

FASTENER INFORMATION

Fastener Name	N/A

SEISMIC BRACE ATTACHMENTS

	Model	Size	Adj. Load
Structural Att.	AF778	N/A	1,250 lbf.
Swivel Att.	AF700	1/2"	1,711 lbf.
Pipe Att.	AF035	3 NPS x 1 NPS	1,220 lbf.

See Appendix A for alternate seismic brace attachments.
All seismic brace attachments manufactured by ASC Engineered Solutions.

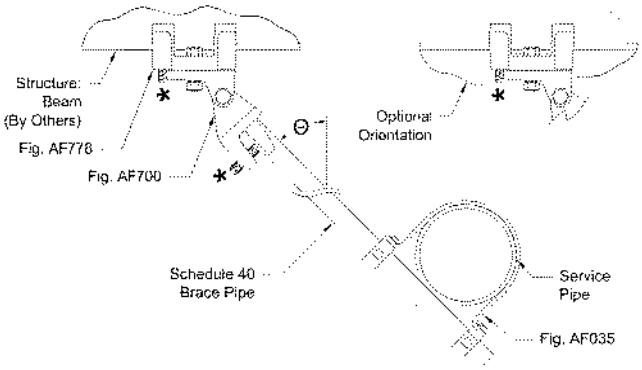

** - denotes hardware shown with the bolt head or nut broken off, as per the product installation instructions*
Net Vertical Reaction Forces do not need to be addressed per NFPA 13-2022.

SPRINKLER SYSTEM LOAD CALCULATION ($F_{PW} = C_P*W_P$)
$C_P = 0.944$

Qty	Line	Description	Pipe Size/Type	Length	Weight/ft	Weight/Line	Total Weight
1	Main	Braced Pipe	3 NPS Steel Sch 10	14.00 ft.	7.94 lb/ft.	111.16 lb.	111.16 lb.
2	Branch 1	Segment A	1 1/2 NPS Steel Sch 40	45.00 ft.	3.61 lb/ft.	162.45 lb.	324.90 lb.

Weakest Main Size	Spacing	Max Fpw
3 NPS Steel Sch 10	20 ft.	966 lbf.

Total System Weight	436.06 lb.
System Design Weight (W_p)	502.00 lb.
Horizontal Seismic Load (Fpw)	474 lbf.

M - COGEN - SEISMIC BRACE CALCULATIONS

Seismic Project	Morongo Cogen - Phase 2	**Brace Name**	M - Cogen
Standard	NFPA 13-2022	**Drawing Reference**	
Brace Type	Longitudinal	**Approval Agency**	FM Approved

STRUCTURE INFORMATION

Structure	I-Beam/Joist
Substrate	Horizontal Beam Flange
Thickness	0.38 in.-0.75 in.
Load Orientation	Perpendicular to Beam

BRACE INFORMATION

Brace Member	1 NPS Sch 40
Brace Length Max	7 ft 0 in
Brace Angle	45° - 90°
Least Radius of Gyration	0.421 in.
l/r Ratio Max	200
Max Horizontal Load	1,310 lbf.

FASTENER INFORMATION

Fastener Name	N/A

SEISMIC BRACE ATTACHMENTS

	Model	Size	Adj. Load
Structural Att.	AF772	Type A	480 lbf.
Swivel Att.	AF700	1/2"	1,711 lbf.
Pipe Att.	AF775	3 NPS x 1 NPS	627 lbf.

See Appendix A for alternate seismic brace attachments.
All seismic brace attachments manufactured by ASC Engineered Solutions.

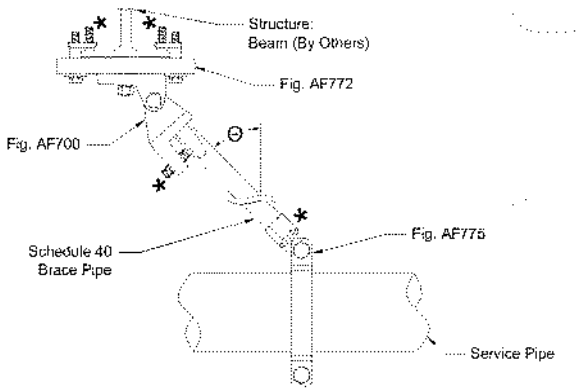

** - denotes hardware shown with the bolt head or nut broken off, as per the product installation instructions*
Net Vertical Reaction Forces do not need to be addressed per NFPA 13-2022.

SPRINKLER SYSTEM LOAD CALCULATION ($F_{PW} = C_P*W_P$)
$C_P = 0.944$

Qty	Line	Description	Pipe Size/Type	Length	Weight/ft	Weight/Line	Total Weight
1	Main	Braced Pipe	3 NPS Steel Sch 10	14.00 ft.	7.94 lb/ft.	111.16 lb.	111.16 lb.

Total System Weight	111.16 lb.
System Design Weight (W_p)	128.00 lb.
Horizontal Seismic Load (Fpw)	121 lbf.

Appendix A - Alternate Seismic Brace Attachments

M - COGEN					
Fastener	**Capacity**	**Nom. Embedment**	**Min. Edge 1|2**	**Swivel**	**Pipe Attachment**
KWIK Bolt TZ2	523 lbf.	3 3/4 in.	1 1/4 in. | --	AF700 1/2" | 1,711 lbf.	AF735 6 NPS x 1 NPS | 1,356 lbf.
--	--	--		--	AF775 6 NPS x 1 NPS | 1,309 lbf.
--	--	--		--	AF776 6 NPS x 1 NPS | 640 lbf.
--	--	--		--	AF730 6 NPS | 913 lbf.

M - COGEN					
Fastener	**Capacity**	**Nom. Embedment**	**Min. Edge 1|2**	**Swivel**	**Pipe Attachment**
KB1	444 lbf.	3 5/8 in.	1 1/4 in. | --	AF700 1/2" | 1,711 lbf.	AF730 6 NPS | 640 lbf.
KWIK Bolt TZ2	523 lbf.	3 3/4 in.	1 1/4 in. | --	AF700 1/2" | 1,711 lbf.	--

M - COGEN				
Structural Attachment	**Structural Attach. Size**	**Structural Attach. Capacity**	**Swivel**	**Pipe Attachment**
AF778	--	1,250 lbf.	AF771 1 NPS x 1/2" | 1,731 lbf.	AF001 3 NPS x 1 NPS | 552 lbf.
AF720	--	1,250 lbf.	AF771 1 NPS x 1/2" | 1,731 lbf.	AF735 3 NPS x 1 NPS | 1,609 lbf.
AF720	--	1,250 lbf.	AF700 1/2" | 1,711 lbf.	AF775 3 NPS x 1 NPS | 777 lbf.
AF727	--	1,250 lbf.	AF727 1/2" | 1,711 lbf.	AF776 3 NPS x 1 NPS | 600 lbf.
AF086	--	600 lbf.	AF075 1 NPS x 1/2" | 1,363 lbf.	AF730 3 NPS | 1,500 lbf.
AF086	--	600 lbf.	AF076 1/2" | 1,234 lbf.	--
AF086	--	600 lbf.	AF700 1/2" | 1,711 lbf.	--

M - COGEN				
Structural Attachment	**Structural Attach. Size**	**Structural Attach. Capacity**	**Swivel**	**Pipe Attachment**
AF778	--	700 lbf.	AF771 1 NPS x 1/2" | 1,731 lbf.	AF730 3 NPS | 906 lbf.
AF778	--	700 lbf.	AF700 1/2" | 1,711 lbf.	--
AF720	--	700 lbf.	AF771 1 NPS x 1/2" | 1,731 lbf.	--
AF720	--	700 lbf.	AF700 1/2" | 1,711 lbf.	--
AF727	--	700 lbf.	AF727 1/2" | 1,711 lbf.	--
AF772	Type A	480 lbf.	AF771 1 NPS x 1/2" | 1,731 lbf.	--
AF772	Type B	500 lbf.	AF771 1 NPS x 1/2" | 1,731 lbf.	--
AF772	Type B	500 lbf.	AF700 1/2" | 1,711 lbf.	--
AF086	--	1,110 lbf.	AF075 1 NPS x 1/2" | 1,363 lbf.	--
AF086	--	1,110 lbf.	AF076 1/2" | 1,234 lbf.	--
AF086	--	1,110 lbf.	AF077 1 NPS x 1/2" | 422 lbf.	--
AF086	--	1,110 lbf.	AF700 1/2" | 1,711 lbf.	--

Appendix B - Enlarged Images

M - COGEN

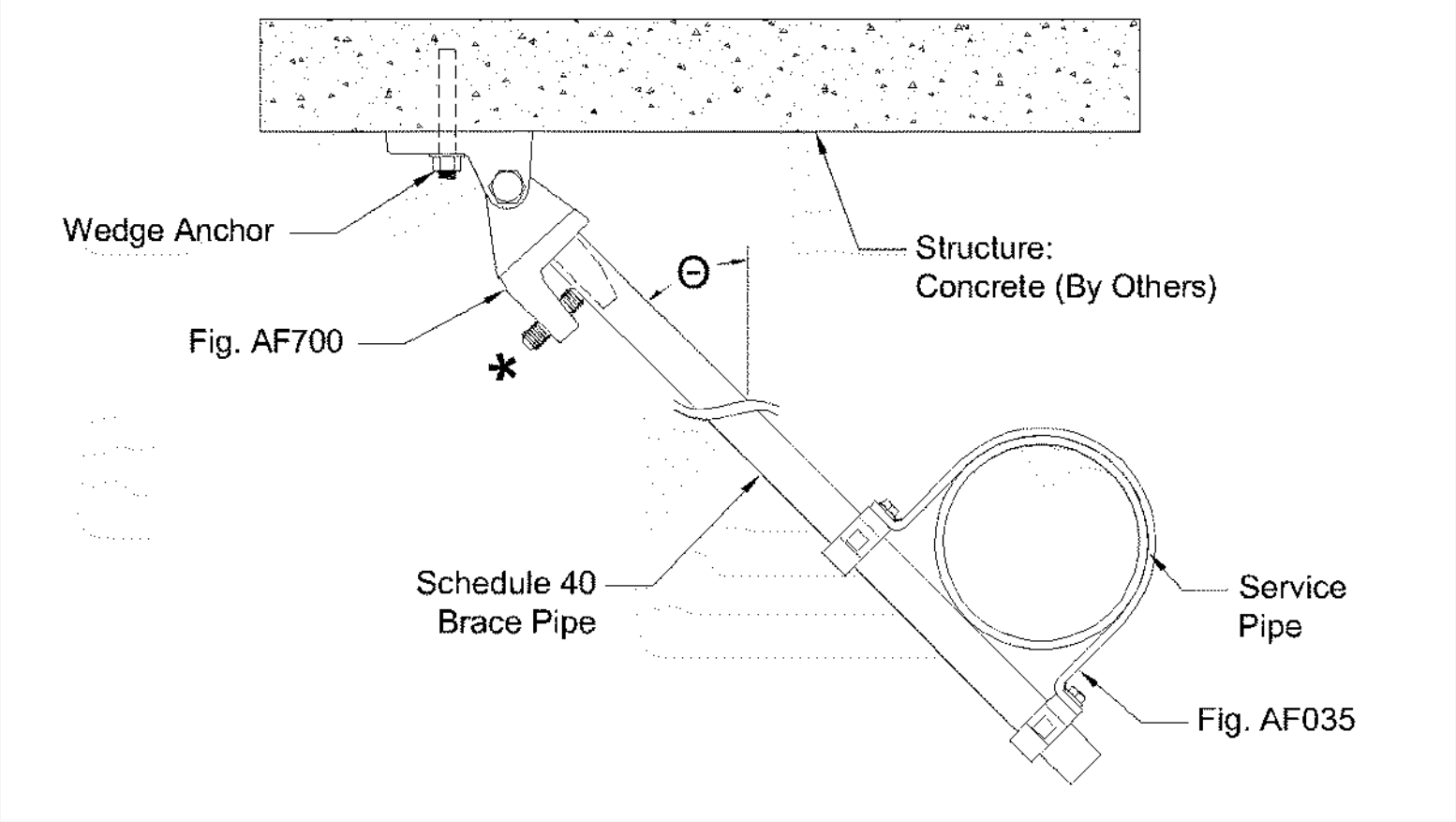

M - COGEN

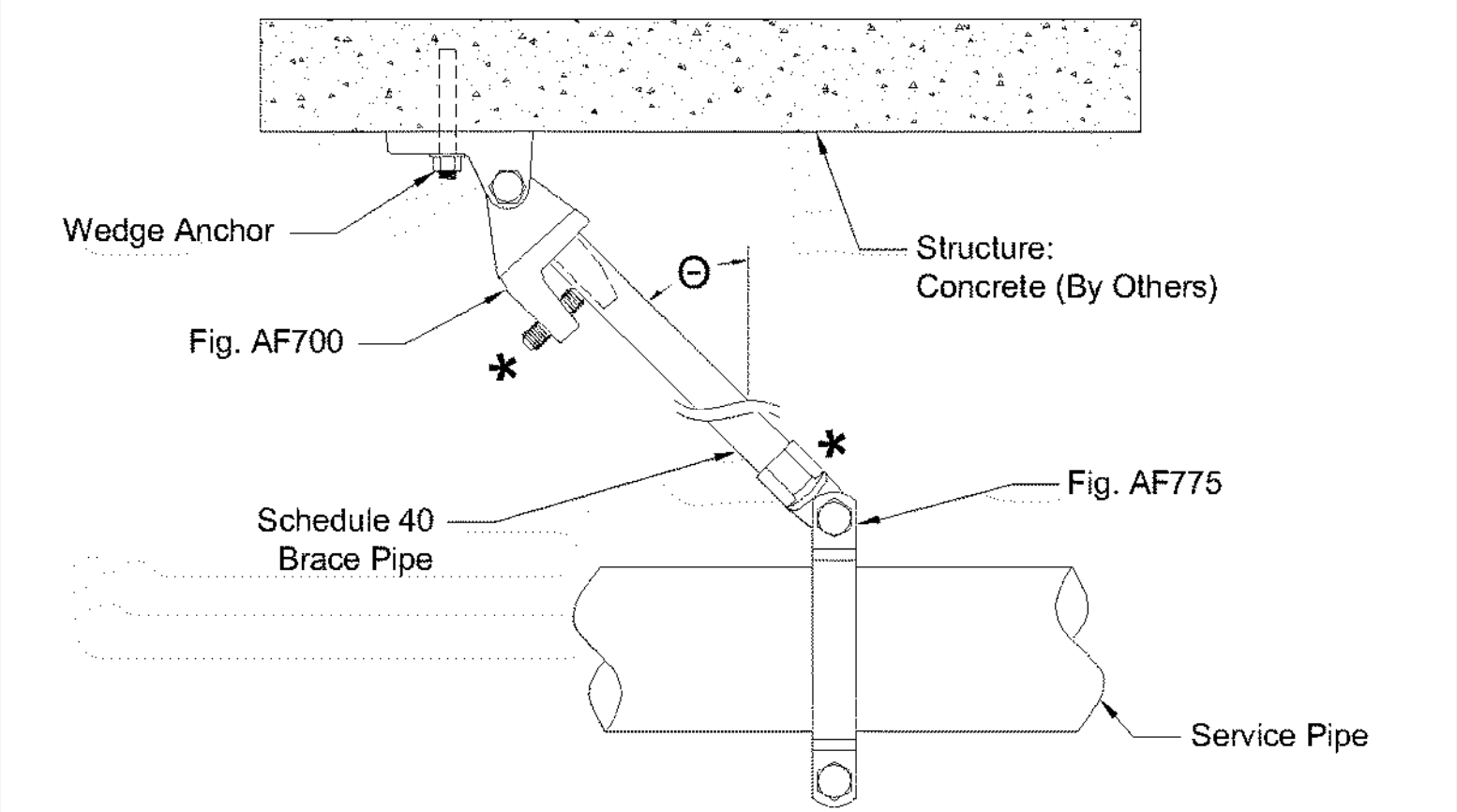

M - COGEN

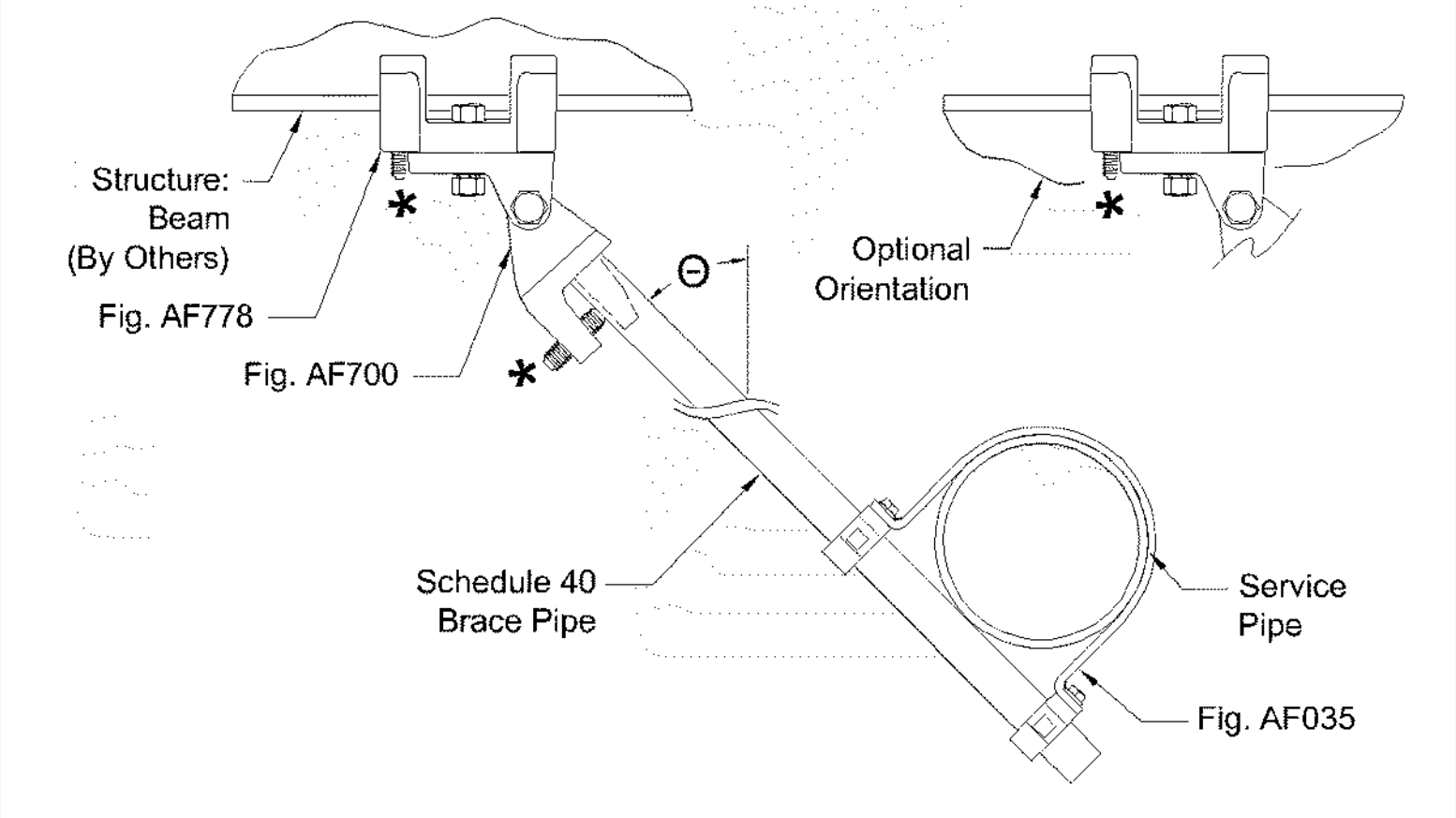

M - COGEN

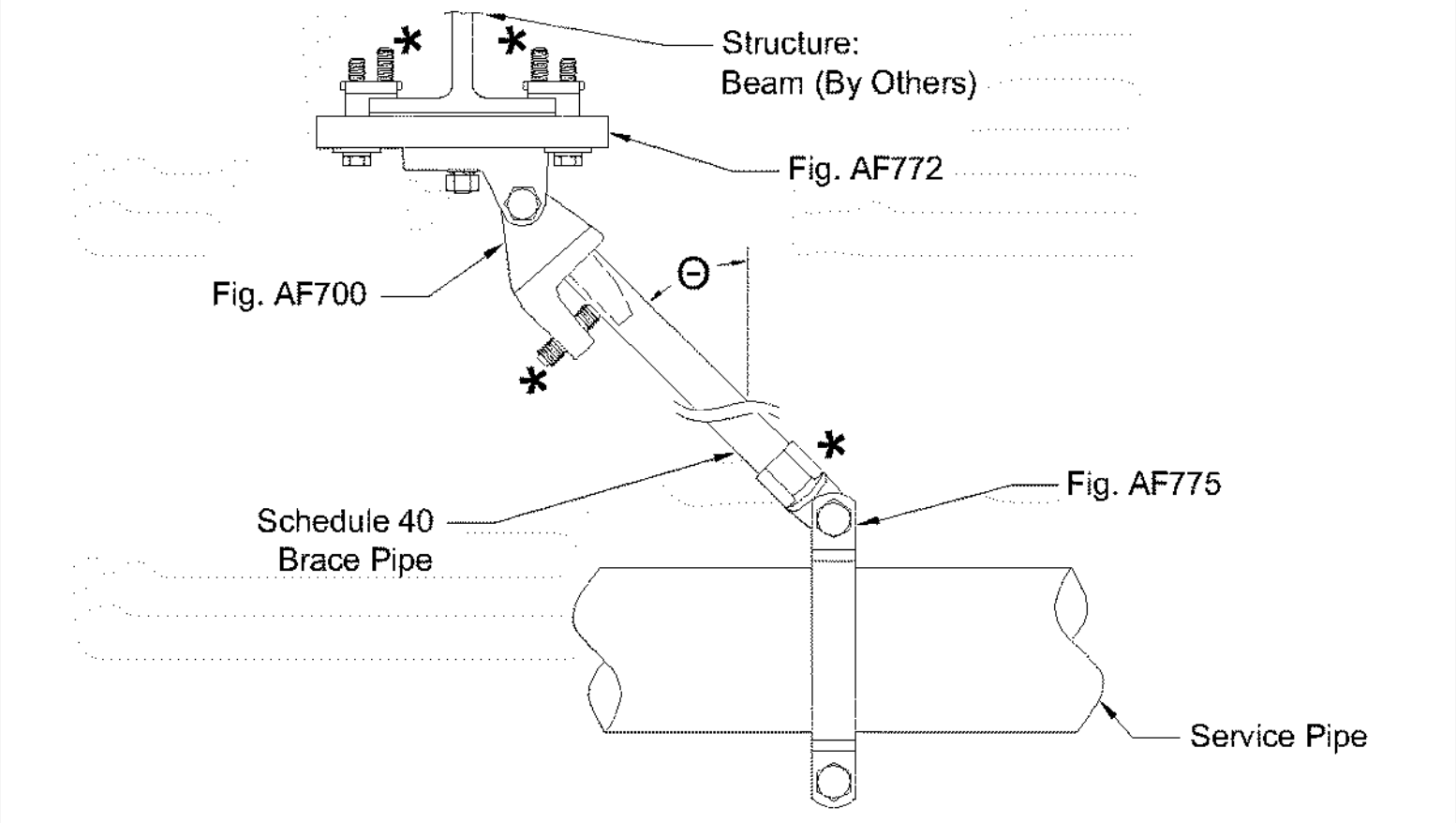

** - denotes hardware shown with the bolt head or nut broken off, as per the product installation instructions*

Appendix C - C_p Calculations

BRACE CALCULATION DATA

Brace Name	Brace Ref	Method	C_p	S_s	Site	H_a	F_a	S_{DS}	Z	H
M - Cogen		A	0.944	2.010	D	>75%	--	--	--	--
M - Cogen		A	0.944	2.010	D	>75%	--	--	--	--
M - Cogen		A	0.944	2.010	D	>75%	--	--	--	--
M - Cogen		A	0.944	2.010	D	>75%	--	--	--	--

CALCULATION METHODS

A	C_p calculated per NFPA 13-2022 Table 18.5.9.3
B	C_p entered by user
C	C_p calculated per ASCE/SEI 7-16 per NFPA 13-2022 Section 18.5.9.4

Notes for Calculation Method A

Per NFPA 13-2022, the following adjustments are made for the height of the component attachment (H_a):

18.5.9.3.4	Where the height of the component attachment to the structure is between 51 percent and 75 percent of the average roof height, the C_p value shall be permitted to be multiplied by a factor of 0.875.
18.5.9.3.5	Where the height of the component attachment to the structure is less than 50 percent of the average roof height, the C_p value shall be permitted to be multiplied by a factor of 0.75.

LEGEND

F_{pw}	Seismic Horizontal Design Force
C_p	Seismic Coefficient per NFPA
S_s	Short Period MCEr Spectral Response Acceleration
F_a	Site Coefficient. See Tables Below.
S_{DS}	Short Period Spectral Acceleration
I_p	Component Importance Factor. Taken as 1.5 for Fire Sprinkler Applications
W_p	Component Operating Weight. Taken as the weight of the Fire Sprinkler System in the ZOI plus 15%
H_a	Height multiplication factor from NFPA 13-2022 Sections 18.5.9.3.4 and 18.5.9.3.5
a_p	Component Amplification Factor. Taken as 2.5 for Fire Sprinkler Applications
R_p	Component Response Modification Factor. Taken as 4.5 for Fire Sprinkler Applications
z	Height in the structure where the component attaches to the structure. Height is relative to the base of the structure and shall not be taken as less than 0 and shall not be larger than "H".
H	Average roof height of the structure relative to the base

EQUATIONS...

$$F_{pw} = C_p W_p$$

$$Where: C_p = 0.7 * \frac{0.4 a_p S_{DS} I_p}{R_p}\left(1 + 2\frac{Z}{H}\right)$$

$$Where: S_{DS} = {}^{2}/_{3}\, F_a S_s$$

$$C_{p\,max} = 0.7 * 1.6 S_{DS} I_p$$

$$C_{p\,min} = 0.7 * 0.3 S_{DS} I_p$$

SITE COEFFICIENT, F_A PER ASCE/SEI 7-16

	$S_s \leq 0.25$	$S_s = 0.5$	$S_s = 0.75$	$S_s = 1$	$S_s = 1.25$	$S_s \geq 1.5$
A	0.8	0.8	0.8	0.8	0.8	0.8
B	0.9	0.9	0.9	0.9	0.9	0.9
C	1.3	1.3	1.2	1.2	1.2	1.2
D	1.6	1.4	1.2	1.1	1	1
E	2.4	1.7	1.3	1.2	1.2	1.2

Use straight-line interpolation for intermediate values of S_s.

SITE CLASSIFICATION PER ASCE/SEI 7-16

Site Class	Ground Structure
A	Hard Rock
B	Rock
C	Very Dense Soil and Soft Rock
D	Stiff Soil
E	Soft Clay Soil

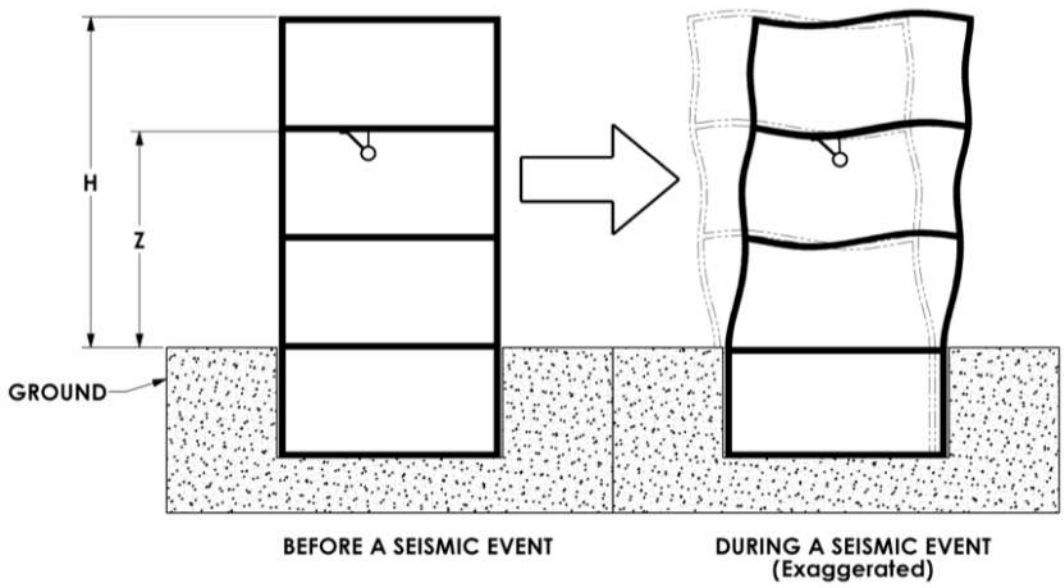

Appendix D - Bill of Materials

Project Name M - Cogen
Code Requirements NFPA 13-2022
Last Updated February 17, 2026

QUANTITY	FIGURE NUMBER	PRODUCT	DESCRIPTION
0		1/2" KWIK Bolt TZ2	Fastener
0	AF700	1/2" AF700 Universal Swivel Attachment	AF700 - 1/2"
	AF035	6 NPS AF035 Model K Brace Clamp	AF035 - 6 NPS x 1 NPS
	AF775	6 NPS AF775 Longitudinal & Lateral Seismic Clamp	AF775 - 6 NPS x 1 NPS
0			Fastener
	AF778	AF778 Universal Structural Brace Attachment	AF778
	AF035	3 NPS AF035 Model K Brace Clamp	AF035 - 3 NPS x 1 NPS
	AF772 Type A	AF772 Type A	AF772 Type A
	AF775	3 NPS AF775 Longitudinal & Lateral Seismic Clamp	AF775 - 3 NPS x 1 NPS

ASC Engineered Solutions

Universal Swivel Attachment
Fig. AF700

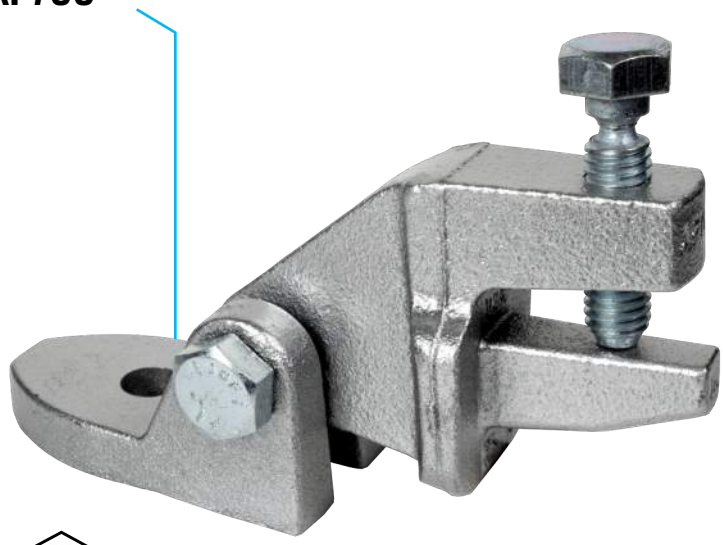

c UL us LISTED FM APPROVED

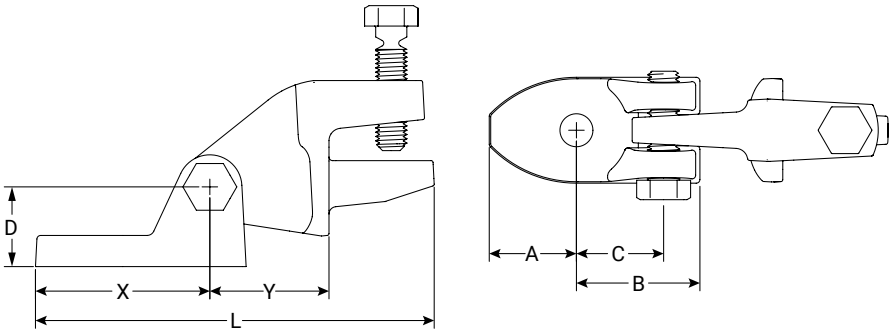

FIG. AF700 Dimensions and Weight

A	B	C	D	L	X	Y	Weight
In./mm	In./mm	In./mm	In./mm	In./mm	In./mm	In./mm	lbs/kgs
1.40	1.983	1.400	1.280	6.40	2.80	1.91	2.25
35.56	50.37	35.56	32.51	162.6	71.1	48.5	1.02

Notes:

ASC Engineered Solutions™ brand bracing components are designed to be compatible ONLY with other ASC Engineered Solutions brand bracing components, resulting in a Listed seismic bracing assembly. Updated UL listing information may be viewed at www.ul.com and updated FM approval information may be viewed at www.approvalguide.com.

Material Specifications

Size Range
Brace Member: See Table
Anchors: ½"- ¾" (M12—M18)

Material
Ductile Iron with Carbon Steel Hardware

Finish
☐ Plain
☐ Electro-Galvanized per ASTM B633

Service
A seismic swivel attachment designed to connect a brace member to the building structure or to a seismic structural attachment. The AF700 rigidly braces piping systems subjected to horizontal and vertical seismic loads.

Approvals
cULus Listed (ANSI/UL 203a)), FM Approved (FM 1950-13), & FM Tested (FM 1950-16). FM Tested (ANSI/FM 1950-16). Complies with NFPA 13, ASCE 7, IBC, & MSS SP-127 bracing requirements.

Features
- The set screw provides a visual indication that proper installation has been achieved
- Eliminates brace member eccentricity by concentrically loading 1" and 1 ¼" brace pipes

Ordering
Specify figure number, fastener size, finish and description.

Disclaimer:

ASC Engineered Solutions does not provide any warranties and specifically disclaims any liability whatsoever with respect to ASC bracing products and components that are used in combination with products, parts or systems not manufactured or sold by ASC. In no event shall ASC be liable for any incidental, direct, consequential, special or indirect damages or lost profits where non-ASC bracing components have been, or are used.

Seis Brace® Seismic Fire Protection Design Tool may be accessed at www.seisbrace.com

AFCON
An ASC Engineered Solution

PROJECT INFORMATION	APPROVAL STAMP
Project: M - Cogen	☐ Approved
Address:	☐ Approved as noted
Contractor:	☐ Not approved
Engineer:	Remarks:
Submittal Date: February 16, 2026	
Notes 1:	
Notes 2:	

ASC Engineered Solutions

Universal Swivel Attachment
Fig. AF700

FIG. AF700 cULus Listing per ANSI/UL 203a (ASD)

Brace Member	Fastener Size	Horizontal Load Rating at Brace Angle			
		30°- 44°	45°- 59°	60°- 90°	Listed
1" – 2" Sch 40 Pipe (DN25 – DN50)	½"- ¾" (M12-M18)	942 lbf (4.19 kN)	1333 lbf (5.93 kN)	1632 lbf (7.26 kN)	1885 lbf (8.38 kN)

1) Load ratings may apply to NPFA 13 fastener orientations A, B, C, D, E, F, G, H, or I.
2) Brace Angles are determined from Vertical.
3) Listed load ratings reduced for angle ranges in accordance with NFPA 13–2019 Table 18.5.2.3.
4) See table below for listed brace members.
5) Minimum safety factor of 2.2 in accordance with NFPA 13–2019 Section A.18.5.2.3.

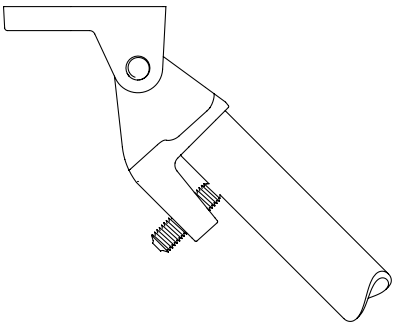

NFPA 13 Orientations A, B, or C

FIG. AF700 FM Approved (Listing) per FM 1950-13 (ASD)

Brace Member	Fastener Size	Horizontal Load Rating at Brace Angle			
		30°-44°	45°-59°	60°-74°	74°-90°
1" – 2" Sch 40 Pipe (DN25 – DN50)	½"- ¾" (M12-M18)	1780 lbf (7.92 kN)	2510 lbf (11.17 kN)	3080 lbf (13.70 kN)	3440 lbf (15.30 kN)

1) Load ratings may apply to NPFA 13 fastener orientations A, B, C, D, E, F, G, H, or I.
2) Brace Angles are determined from Vertical.
3) Listed load ratings reduced for angle ranges in accordance with NFPA 13–2019 Table 18.5.2.3.
4) See table below for listed brace members.
5) Minimum safety factor of 1.5 in accordance with NFPA 13–2016 Section A.9.3.5.2.3. To convert the load ratings above to a safety factor of 2.2 per NFPA 13–2019 Section A.18.5.2.3, multiply load ratings by a factor of 0.68.
6) To convert to LRFD Load Ratings, ASD Load Ratings may be multiplied by a factor of 1.5.

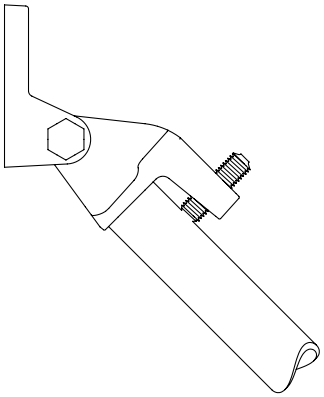

NFPA 13 Orientations D, E, or F

FIG. AF700 FM Listed, Approved & Tested Brace Members

Brace Member	Brace Size	Standard (or Equivalent)	UL	FM
Sch. 40 NPS Pipe	1", 1¼", 1½", 2"	ASTM A53, A106,A135, or A795	✓	✓
Sch. 40 Metric Pipe	DN25	KS S 3562	✓	✓
	DN32	EN10255H		✓
Metric Pipe	DN40	GB/T 3091		✓
	DN50	JIS G3454		✓

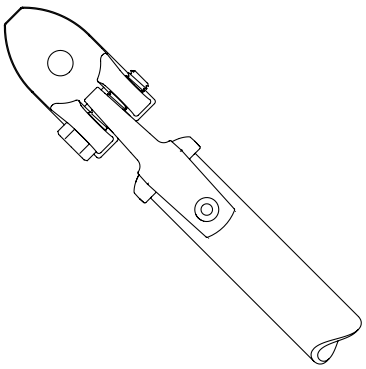

NFPA 13 Orientations G, H, or I

FIG AF700 Horizontal Prying Factors (Pr) Per NFPA 13: Angles (Deg)

Fastener Orientation	A	B	C	D	E	F	G	H	I
Brace Angle	30°-44°	45°-59°	60°-90°	30°-44°	45°-59°	60°-90°	30°-44°	45°-59°	60°-90°
AF700	2.55	1.09	0.91	1.41	1.45	2.00	1.83	1.29	1.06
AF700 w/ Metal Deck[1]	2.55	1.09	1.14	–	–	–	–	–	–
AF700 w/ Metal Deck[2]	2.75	1.11	1.14	–	–	–	–	–	–

1) Prying factors reflect the baseplate "B" dimension overhanging the edge of the metal deck. Used for DeWalt anchor loads.
2) Prying factors reflect the baseplate "A" or "B" dimension overhanging the edge of the metal deck. Used for NFPA & Hilti anchor loads.
3) Prying Factors calculated in accordance with NFPA 13–2019 Section A.18.5.12.2.

asc-es.com

Building connections that last™

ASC Engineered Solutions

Universal Swivel Attachment
Fig. AF700

Method 1 – Connection to Brace Member First

1. Slide the brace member over the lower jaw until it contacts the back wall.
2. Hand tighten the set screw until it contacts the brace member. Continue to torque the set screw until the head breaks off.
3. Rotate the brace assembly up to the fastener or the related seismic structural attachment and connect through the mounting hole.
4. Tighten per the fastener or structural attachment specifications.
5. Ensure the brace angle is within the range specified.

Notes: The cross bolt should be hand tight. For visual inspection, at least one thread should be exposed.

Method 2 – Connection to Structure First

1. Connect the AF700 to the fastener or the related seismic structural attachment.
2. Tighten per the fastener or structural attachment specifications.
3. Slide the brace member over the lower jaw until it contacts the back wall.
4. Hand tighten the set screw until it contacts the brace member. Continue to torque the set screw until the head breaks off.
5. Rotate the brace member until the brace angle is within the specified range.

Notes: The cross bolt should be hand tight. For visual inspection, at least one thread should be exposed..

Structural Attachments, Anchors, & Fasteners Listed, Approved, & Tested with the AF700

Structural Attachment	Structure
AF085	Steel Joist (Top Chord)
AF086	Horizontal Steel Flange (I-Beam Bottom Flange)
AF772	Horizontal Steel Flange (I-Beam Bottom Flange)
AF778	Horizontal Steel Flange (I-Beam Top or Bottom Flange) C-Channel (Top or Bottom Flange) Vertical Flange of a Joist (Top Chord)
AF779	All Structures with the Applicable Approved Anchor or Fastener
DeWalt Power-Stud®+ SD1	Cracked Concrete Cracked Concrete Filled Metal Deck
DeWalt Power-Stud®+ SD2	Cracked Concrete Cracked Concrete Filled Metal Deck
DeWalt Wood-Knocker®II+	Cracked Concrete
DeWalt Bang-It®+	Cracked Concrete Filled Metal Deck
DeWalt DDI+™	Cracked Concrete Filled Metal Deck
Anchors & Fasteners Per NFPA 13	Cracked Concrete Cracked Concrete Filled Metal Deck Steel Wood Saw Lumber or Glue-Laminated Timbers

asc-es.com

Building connections that last™

ASC Engineered Solutions

Model K Lateral Sway Brace
Fig. AF035

c UL us LISTED FM APPROVED

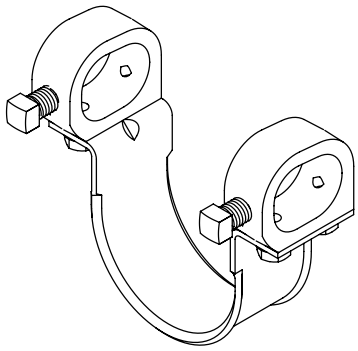

1" (DN25) to 3" (DN80) Service Pipe

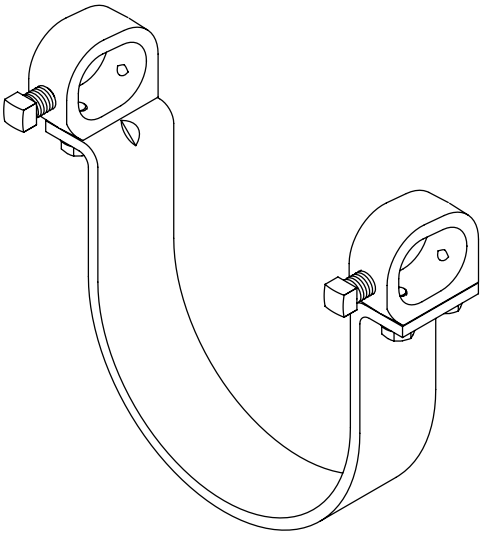

4" (DN100) to 12" Service Pipe

Material Specifications

Size Range:
Service Pipe Size: 1" – 12"
Brace Member: 1" – 2"

Material
Ductile Iron Casting with Carbon Steel Strap and Hardware

Finish
☐ Plain
☐ Electro-Galvanized

Service
A seismic lateral brace designed to connect a brace member to the service pipe. The AF035 rigidly braces steel and CPVC piping systems subjected to horizontal and vertical seismic loads.

Approvals
cULus Listed (ANSI/UL 203a) and FM Approved (FM 1950-13). Complies with NFPA 13, ASCE 7, IBC, & MSS SP-127 bracing requirements.

Features
- The set screw provides a visual indication that proper installation has been achieved
- Rounded edge design eliminates potential for abrasion of CPVC pipe

Patents
No. 7,516,922, No. 7,523,895

Ordering
Specify figure number, service pipe size, brace size, finish, and description.

AFCON
An ASC Engineered Solution

PROJECT INFORMATION	APPROVAL STAMP
Project: M - Cogen	☐ Approved
Address:	☐ Approved as noted
Contractor:	☐ Not approved
Engineer:	Remarks:
Submittal Date: February 16, 2026	
Notes 1:	
Notes 2:	

ASC Engineered Solutions

Model K Lateral Sway Brace
Fig. AF035

FIG. AF035: Weight Per Size

Service Pipe Size	Brace Member Size			
	1" (DN25)	1¼"(DN32)	1½" (DN40)	2" (DN50)
1 (DN25)	1.60 lbs	1.80 lbs	2.00 lbs	2.28 lbs
1¼" (DN32)	1.68 lbs	1.88 lbs	2.08 lbs	2.36 lbs
1½" (DN40)	1.64 lbs	1.84 lbs	2.04 lbs	2.32 lbs
2" (DN50)	1.88 lbs	2.08 lbs	2.28 lbs	2.56 lbs
2½"	1.90 lbs	2.10 lbs	2.30 lbs	2.58 lbs
DN65	2.00 lbs	2.20 lbs	2.40 lbs	2.68 lbs
3" (DN80)	2.10 lbs	2.30 lbs	2.50 lbs	2.78 lbs
4" (DN100)	2.18 lbs	3.38 lbs	3.58 lbs	3.76 lbs
5" (DN125)	3.40 lbs	3.60 lbs	3.80 lbs	4.08 lbs
DN150	3.80 lbs	4.00 lbs	4.20 lbs	4.48 lbs
6"	3.90 lbs	4.10 lbs	4.30 lbs	4.58 lbs
DN200	4.70 lbs	4.90 lbs	5.10 lbs	5.38 lbs
8"	4.80 lbs	5.00 lbs	5.20 lbs	5.48 lbs
10"	5.60 lbs	5.80 lbs	6.00 lbs	6.28 lbs
12"	6.16 lbs	6.36 lbs	6.56 lbs	6.84 lbs

ASC Engineered Solutions

Model K Lateral Sway Brace
Fig. AF035

FIG. AF035 cULus Listing per ANSI/UL 203a (ASD)

Service Pipe Size	Standard Service Pipe	Speicalty Service Pipe	Horizontal Load Rating at Brace Angle			
			30°-44°	45°-59°	60°-90°	Listed
			lbf/kN	lbf/kN	lbf/kN	lbf/kN
1" (DN25)	Sch. 10 Sch. 40 CPVC Metric Pipe	Mega-Thread MLT / GL Eddy Thread EZ-Thread				
1¼" (DN32)	Sch. 10 Sch. 40 CPVC Metric Pipe	Mega-Flow MLT / GL Mega-Thread Eddy Flow Eddy Thread EZ-Thread				
1½" (DN40)	Sch. 10 Sch. 40 CPVC Metric Pipe	Mega-Flow MLT / GL Mega-Thread Eddy Flow Eddy Thread EZ-Thread Fire-Flo	625 2.78	884 3.93	1082 4.81	1250 5.56
2" (DN50)	Sch. 10 Sch. 40 CPVC Metric Pipe	Mega-Flow MLT / GL Mega-Thread Eddy Flow Eddy Thread EZ-Thread Fire-Flo				
2½"	Sch. 10 Sch. 40 CPVC	Mega-Flow Eddy Flow Fire-Flo				
DN65	Metric Pipe	–				
3" (DN80)	Sch. 10 Sch. 40 CPVC Metric Pipe	Mega-Flow Eddy Flow Fire-Flo				
4" (DN100)	Sch. 10 Sch. 40 Metric Pipe	Mega-Flow Eddy Flow Fire-Flo				
5" (DN125)	Sch. 10 Sch. 40 Metric Pipe	–				
DN150	Metric Pipe	–	942 4.19	1333 5.93	1632 7.26	1885 8.38
6"	Sch. 10 Sch. 40	Mega-Flow				
DN200	Metric Pipe	–				
8"	0.188" wall Sch. 40	–				
10"	0.188" wall Sch. 40	–				
12"	0.188" wall Sch. 40	–	1125 5.00	1591 7.08	1948 8.67	2250 10.01

1) Brace Angles are determined from Vertical.
2) Sch. 10 & 0.188" Wall Load Ratings may be used for any thicker wall pipe of the same diameter.
3) Listed load ratings reduced for angle ranges in accordance with NFPA 13-2019 Table 18.5.2.3.
4) See table below for UL listed specialty pipes & UL Listed metric service pipes.
5) Load Ratings reflect 1" (DN25) – 2" (DN50) brace members. See table below for listed brace members.
6) Minimum safety factor of 2.2 in accordance with NFPA 13-2019 Section A.18.5.2.3.

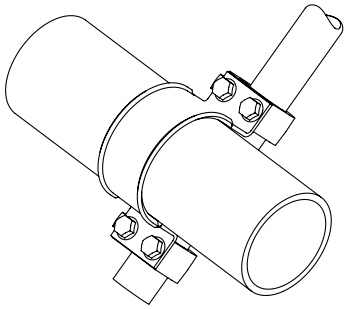

Lateral Application

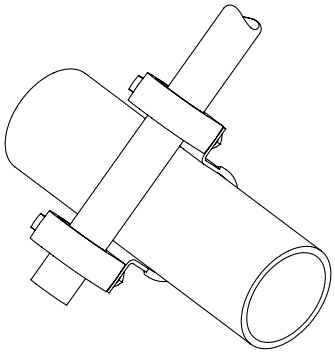

Lateral Application

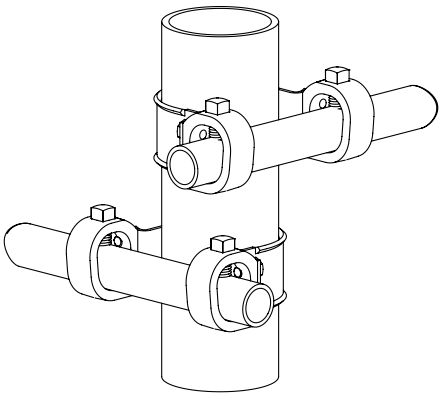

Riser Application

asc-es.com

Building connections that last™

ASC Engineered Solutions

Model K Lateral Sway Brace
Fig. AF035

FIG. AF035 cULus Listing Per UL 203a (ASD) For NFPA 13-2016 Editions Or Earlier

UL's current Listings are predicated on installation in accordance with the latest edition of NFPA 13. The 2016 and earlier editions of NFPA 13 referenced a minimum safety factor of 1.5 for the load rating as compared to 2.2 for the current edition. The load ratings noted in this table are consistent with the historical cULus Listings that were evaluated to the requirements of UL 203A, Outline of Investigation for Sway Brace Devices for Fire Sprinkler System Piping, based upon a minimum safety factor of 1.5 in accordance with the earlier editions of NFPA 13. The load ratings based upon the 2016 or earlier editions of NFPA 13 should only be used where approved by the Authority Having Jurisdiction (AHJ).

Service Pipe Size	Standard Service Pipe	Speicalty Service Pipe	Horizontal Load Rating at Brace Angle			
			30°-44°	45°-59°	60°-74°	75°-90°
			lbf/kN	lbf/kN	lbf/kN	lbf/kN
1" (DN25)	Sch. 10 Sch. 40 Metric Pipe	Mega-Thread MLT / GL Eddy Thread EZ-Thread				
1¼" (DN32)	Sch. 10 Sch. 40 Metric Pipe	Mega-Flow MLT / GL Mega-Thread Eddy Flow Eddy Thread EZ-Thread				
1½" (DN40)	Sch. 10 Sch. 40 Metric Pipe	Mega-Flow MLT / GL Mega-Thread Eddy Flow Eddy Thread EZ-Thread Fire-Flo				
2" (DN50)	Sch. 10 Sch. 40 Metric Pipe	Mega-Flow MLT / GL Mega-Thread Eddy Flow Eddy Thread EZ-Thread Fire-Flo				
2½"	Sch. 10 Sch. 40 Metric Pipe	Mega-Flow Eddy Flow Fire-Flo	1382 6.15	1955 8.70	2393 10.65	2765 15.52
DN65	Metric Pipe	–				
3" (DN80)	Sch. 10 Sch. 40 Metric Pipe	Mega-Flow Eddy Flow Fire-Flo				
4" (DN100)	Sch. 10 Sch. 40 Metric Pipe	Mega-Flow Eddy Flow Fire-Flo				
5" (DN125)	Sch. 10 Sch. 40 Metric Pipe	–				
DN150	Metric Pipe	–				
6"	Sch. 10 Sch. 40	Mega-Flow				
DN200	Metric Pipe	–				
8"	0.188" Wall Sch. 40	–				
10"	0.188" Wall Sch. 40	–				
12"	0.188" Wall Sch. 40	–	1870 8.32	2644 11.77	3238 14.40	3740 16.64

1) Brace Angles are determined from Vertical.
2) Sch. 10 & 0.188" Wall Load Ratings may be used for any thicker wall pipe of the same diameter.
3) Listed load ratings reduced for angle ranges in accordance with NFPA 13-2016 Section A.9.3.5.2.3.
4) See table below for UL listed specialty pipes & UL Listed metric service pipes.
5) Load Ratings reflect 1" (DN25) – 2" (DN50) brace members. See table below for listed brace members.
6) Minimum safety factor of 2.2 in accordance with NFPA 13-2016 Section A.9.3.5.2.3.

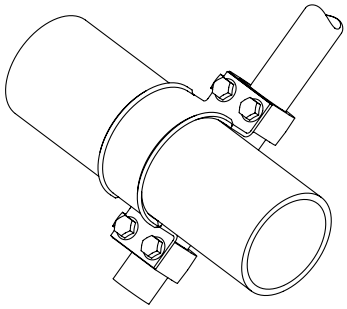

Lateral Application

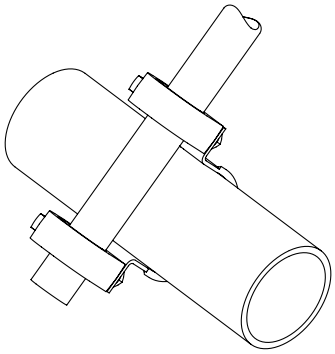

Lateral Application

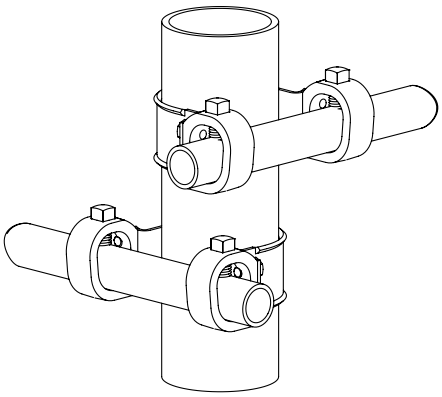

Riser Application

asc-es.com

Building connections that last™

ASC Engineered Solutions

Model K Lateral Sway Brace
Fig. AF035

FIG. AF035 FM Approved (Listing) per FM 1950-13 (ASD)

Service Pipe Size	Standard Service Pipe	Speicalty Service Pipe	Horizontal Load Rating at Brace Angle			
			30°-44°	45°-59°	60°-74°	75°-90°
			lbf/kN	lbf/kN	lbf/kN	lbf/kN
1" (DN25)	Sch. 10 Sch. 40 Metric Pipe	Mega-Thread MLT / GL Eddy Thread EZ-Thread	1660 7.38	2350 10.45	2880 12.81	3210 14.28
1¼" (DN32)	Sch. 10 Sch. 40 Metric Pipe	Mega-Flow MLT / GL Mega-Thread Eddy Flow Eddy Thread EZ-Thread				
1½" (DN40)	Sch. 10 Sch. 40 Metric Pipe	Mega-Flow MLT / GL Mega-Thread Eddy Flow Eddy Thread EZ-Thread Fire-Flo	1540 6.85	2170 9.65	2660 11.83	2970 13.21
2" (DN50)	Sch. 10 Sch. 40 Metric Pipe	Mega-Flow MLT / GL Mega-Thread Eddy Flow Eddy Thread EZ-Thread Fire-Flo				
2½"	Sch. 10 Sch. 40	Mega-Flow Eddy Flow Fire-Flo	1270 5.65	1790 7.96	2200 9.79	2450 10.90
DN65	Metric Pipe	–				
3" (DN80)	Sch. 10 Sch. 40 Metric Pipe	Mega-Flow Eddy Flow Fire-Flo				
4" (DN100)	Sch. 10 Sch. 40 Metric Pipe	Mega-Flow Eddy Flow Fire-Flo	1020 4.54	1450 6.45	1770 7.87	1980 8.81
5" (DN125)	Sch. 10 Sch. 40 Metric Pipe	–	860 3.83	1220 5.43	1490 6.63	1660 7.38
DN150	Metric Pipe	–				
6"	Sch. 10 Sch. 40	Mega-Flow				
DN200	Metric Pipe	–	540 2.40	770 3.43	950 4.23	1060 4.72
8"	0.188" Wall Sch. 40	–				

1) Brace Angles are determined from Vertical.
2) Sch. 10 & 0.188" Wall Load Ratings may be used for any thicker wall pipe of the same diameter.
3) See table below for FM listed specialty pipes & FM Listed metric service pipes.
4) Load Ratings reflect 1" (DN25) – 2" (DN50) brace members. See table below for listed brace members.
5) Minimum safety factor of 1.5 in accordance with NFPA 13-2016 Section A.9.3.5.2.3. To convert the load ratings above to a safety factor of 2.2 per NFPA 13-2019 Section A.18.5.2.3, multiply load ratings by a factor of 0.68.
5) To convert to LRFD Load Ratings, ASD Load Ratings may be multiplied by a factor of 1.5.

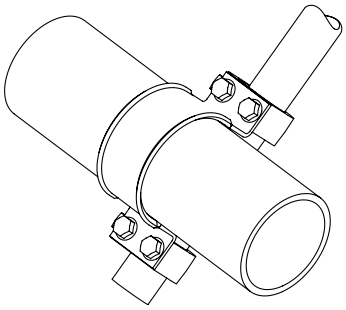

Lateral Application

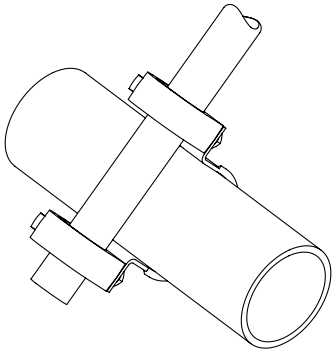

Lateral Application

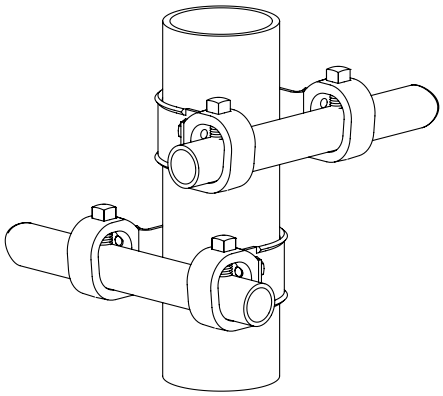

Riser Application

asc-es.com

Building connections that last™

Model K Lateral Sway Brace
Fig. AF035

1 Place the AF035 over the service pipe to be braced.

2 Insert the brace member through the cast hoop ends.
The end of the brace pipe shall extend at least 1" (25.4 mm) past the cast hoop ends.

3 Hand tighten the set screws until they contact the brace member.
Continue to torque the set screws until the heads bottom out on the cast hoop ends.

4 Tighten per the fastener or structural attachment specifications.

5 Ensure the brace angle is within the specified range.

Notes: The brace member may be installed above or below the service pipe.

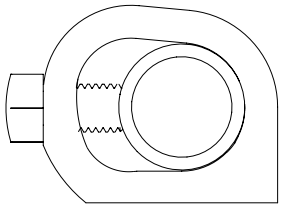

Set Screw Installation

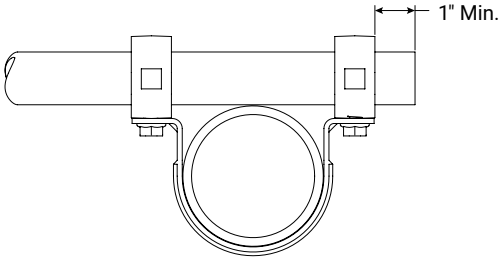

FIG. AF035 cULus Listed & FM Approved Brace Members

Brace Member	Brace Size	Standard (or Equivalent)	UL	FM
Sch. 40 NPS Pipe	1", 1¼", 1½", 2"	ASTM A53, A106, A135, or A795	✓	✓
Sch. 40 Metric Pipe	DN25 DN32 DN40 DN50	KS S 3562	✓	✓
		EN10255H		✓
Metric Pipe		GB/T 3091		✓
		JIS G3454		✓

FIG. AF035 cULus Listed & FM Approved Metric Service Pipes

Service Pipe Standard (or Equivalent)	Service Pipe Size	UL	FM
KS D 3507 KS D 3537	DN25 DN32 DN40 DN50 DN65 DN80 DN100 DN125 DN150 DN200	✓	✓
KS D 3562 Sch. 40		✓	✓
GB/T 3091 GB/T 3092			✓
JIS G3452			✓
EN 10255M			✓
EN 10255H			✓

Notes:
ASC Engineered Solutions™ brand bracing components are designed to be compatible ONLY with other ASC Engineered Solutions brand bracing components, resulting in a Listed seismic bracing assembly. Updated UL listing information may be viewed at www.ul.com and updated FM approval information may be viewed at www.approvalguide.com.

Disclaimer:
ASC Engineered Solutions does not provide any warranties and specifically disclaims any liability whatsoever with respect to ASC bracing products and components that are used in combination with products, parts or systems not manufactured or sold by ASC. In no event shall ASC be liable for any incidental, direct, consequential, special or indirect damages or lost profits where non-ASC bracing components have been, or are used.

Seis Brace® Seismic Fire Protection Design Tool may be accessed at www.seisbrace.com

asc-es.com

Building connections that last™

ASC Engineered Solutions

Longitudinal & Lateral Seismic Clamp
Fig. AF775

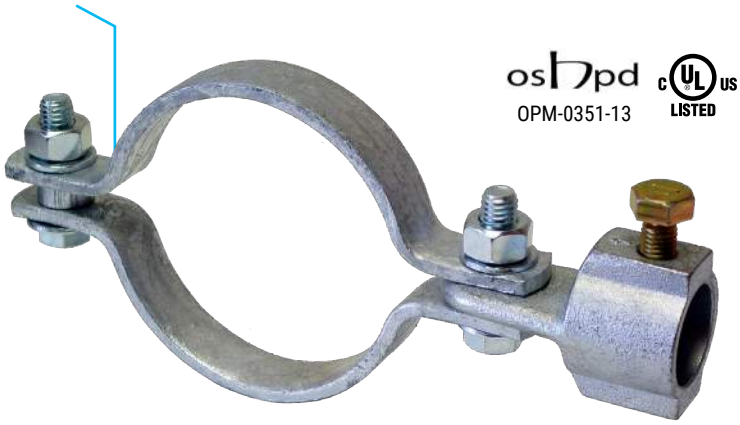

OPM-0351-13 LISTED APPROVED

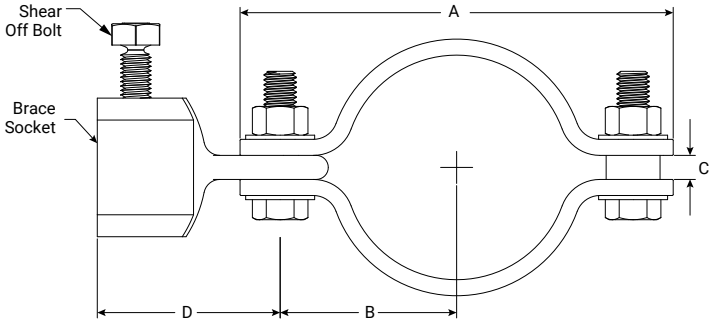

Material Specifications

Size Range:
Flange Thickness: 2 ½" – 8"
Flange Widths: 1" – 1¼"

Material
Carbon Steel with a Ductile Iron Socket

Finish
☐ Plain
☐ Electro-Galvanized per ASTM B633

Service
A seismic longitudinal & lateral brace designed to connect a brace member to the service pipe. The AF775 rigidly braces steel piping systems subjected to horizontal and vertical seismic loads.

Approvals
cULus Listed (ANSI/UL 203a), FM Approved (FM 1950-13), & OSHPD (OPM-0351-13). Complies with NFPA 13, ASCE 7, IBC, & MSS SP-127 bracing requirements.

Features
The set screw provides a visual indication that proper installation has been achieved.

Ordering
Specify figure number, service pipe size, brace size, finish, and description.

FIG. AF775 Dimensions, Weight and Installation Torque

Brace Size	A	B	C	D		Socket Depth	Weight per Brace Size		Installation Torque
							1" (DN25)	1 ¼" (DN25)	
2 ½"	6 in	2⅜ in	⅜ in	2⅞ in	3 in	1⅜ in	2.19 lbs	2.54 lbs	80 ft-lbs
DN65	6⅛ in	2½ in					2.25 lbs	2.60 lbs	
3" (DN80)	6¾ in	2¾ in					2.36 lbs	2.71 lbs	
4" (DN100)	8½ in	3½ in					2.62 lbs	2.97 lbs	100 ft-lbs
DN125	9½ in	4 in					3.74 lbs	4.09 lbs	
5"	9½ in	4 in					3.74 lbs	4.09 lbs	
DN150	11⅜ in	4⅞ in	1 in				6.32 lbs	6.67 lbs	120 ft-lbs
6"	11½ in	4⅞ in					6.32 lbs	6.67 lbs	
DN200	13⅝ in	6 in					7.42 lbs	7.77 lbs	140 ft-lbs
8"	13¾ in	6 in					7.42 lbs	7.77 lbs	

AFCON An ASC Engineered Solution

PROJECT INFORMATION	APPROVAL STAMP
Project: M - Cogen	☐ Approved
Address:	☐ Approved as noted
Contractor:	☐ Not approved
Engineer:	Remarks:
Submittal Date: February 16, 2026	
Notes 1:	
Notes 2:	

ASC Engineered Solutions

Longitudinal & Lateral Seismic Clamp
Fig. AF775

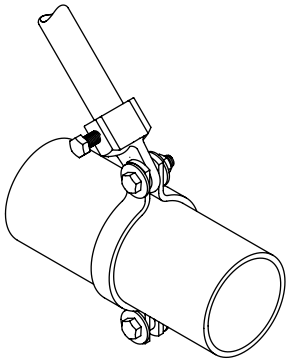

Longitudinal Application

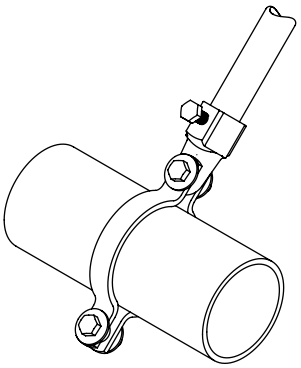

Lateral Application

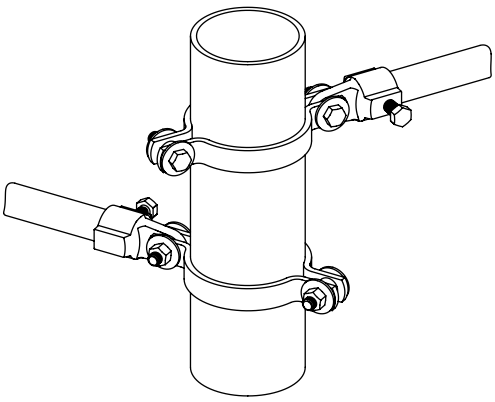

Riser Application

FIG. AF775 cULus Listing per ANSI/UL 203a (ASD)

Service Pipe Size	Service Pipe	Longitudinal & Lateral Horizontal Load Rating at Brace Angle			
		30°-44°	45°-59°	60°-90°	Listed
2½"	Sch. 10 Sch. 40	340 lbf (1.65 kN)	480 lbf (2.14 kN)	588 lbf (2.62 kN)	680 lbf (3.02 kN)
3" (DN80)	Sch. 10 Sch. 40 Metric Pipe				
4" (DN100)					
5"	Sch. 10 Sch. 40	545 lbf (2.42 kN)	770 lbf (3.43 kN)	943 lbf (4.2kN)	1090 lbf (4.85 kN)
6"					
8"	0.188" Wall Sch. 40	685 lbf (3.05 kN)	968 lbf (4.31kN)	1186 lbf (5.28kN)	1370 lbf (6.09kN)

2) Sch. 10 Load Ratings may be used for any thicker wall pipe of the same diameter.
3) Listed load ratings reduced for angle ranges in accordance with NFPA 13-2019 Table 18.5.2.3.
4) Load Ratings reflect 1" (DN25) – 1¼" (DN32) brace members. See table below for listed brace members.
5) Minimum safety factor of 2.2 in accordance with NFPA 13-2019 Section A.18.5.2.3.

FIG. AF775 cULus Listing per UL 203a (ASD) for NFPA 13-2016 Editions or Earlier

UL's current Listings are predicated on installation in accordance with the latest edition of NFPA 13. The 2016 and earlier editions of NFPA 13 referenced a minimum safety factor of 1.5 for the load rating as compared to 2.2 for the current edition. The load ratings noted in this table are consistent with the historical cULus Listings that were evaluated to the requirements of UL 203A, Outline of Investigation for Sway Brace Devices for Fire Sprinkler System Piping, based upon a minimum safety factor of 1.5 in accordance with the earlier editions of NFPA 13. The load ratings based upon the 2016 or earlier editions of NFPA 13 should only be used where approved by the Authority Having Jurisdiction (AHJ).

Service Pipe Size	Service Pipe	Longitudinal & Lateral Horizontal Load Rating at Brace Angle			
		30°-44°	45°-59°	60°-90°	Listed
2½"	Sch. 10 Sch. 40	500 lbf (1.65 kN)	707 lbf (3.15 kN)	865 lbf (3.85 kN)	1000 lbf (4.45 kN)
DN65	Metric Pipe				
3" (DN80)	Sch. 10 Sch. 40 Metric Pipe				
4" (DN100)					
DN125	Sch. 10 Sch. 40	800 lbf (3.56 kN)	1131 lbf (5.03 kN)	1385 lbf (6.16 kN)	1600 lbf (7.12 kN)
5"	Sch. 10 Sch. 40				
DN150	Metric Pipe				
6"	Sch. 10 Sch. 40				
DN200	Metric Pipe	1007 lbf (4.48 kN)	1425 lbf (6.34 kN)	1744 lbf (7.76 kN)	2015 lbf (8.96 kN)
8"	0.188" Wall Sch. 40				

1) Brace Angles are determined from Vertical.
2) Sch. 10 Load Ratings may be used for any thicker wall pipe of the same diameter.
3) Listed load ratings reduced for angle ranges in accordance with NFPA 13-2019 Table 18.5.2.3.
4) Load Ratings reflect 1" (DN25) – 1¼" (DN32) brace members. See table below for listed brace members.
5) Minimum safety factor of 2.2 in accordance with NFPA 13-2019 Section A.18.5.2.3

asc-es.com

Building connections that last™

ASC Engineered Solutions

Longitudinal & Lateral Seismic Clamp
Fig. AF775

FIG. AF775 FM Approved (Listing) per FM 1950-13 (ASD)

Service Pipe Size	Service Pipe	Longitudinal & Lateral Horizontal Load Rating at Brace Angle				Lateral Load Rating			
		30°- 44°	45°- 59°	60°- 74°	75°- 90°	30°- 44°	45°- 59°	60°- 74°	75°- 90°
2½" (DN65)	LW[2] Sch. 10 Sch. 40 Metric Pipe	940 lbf (4.18 kN)	1140 lbf (5.07 kN)	1370 lbf (6.09 kN)	1530 lbf (6.81 kN)	1730 lbf (7.70 kN)	2460 lbf (10.94 kN)	3010 lbf (13.39 kN)	3360 lbf (14.95 kN)
3" (DN80)	LW[2] Sch. 10 Sch. 40 Metric Pipe								
4" (DN100)	LW[2] Sch. 10 Sch. 40 Metric Pipe	780 lbf (3.47 kN)	920 lbf (4.09 kN)	1190 lbf (5.29 kN)	1080 lbf (4.80 kN)	1140 lbf (5.07 kN)	1610 lbf (7.16 kN)	1970 lbf (8.76 kN)	2200 lbf (9.79 kN)
5" (DN125)	LW[2] Sch. 10 Sch. 40 Metric Pipe								
6" (DN150)	LW[2] Sch. 10 Sch. 40 Metric Pipe	1000 lbf (4.45 kN)	1260 lbf (5.60 kN)	1280 lbf (5.69 kN)	1410 lbf (6.27 kN)	1360 lbf (6.05 kN)	1920 lbf (8.54 kN)	2350 lbf (10.45 kN)	2620 lbf (11.65 kN)
8" (DN200)	Sch. 10 Sch. 40 Metric Pipe	830 lbf (3.69 kN)	1140 lbf (5.07 kN)	1330 lbf (5.92 kN)	1470 lbf (6.54 kN)	1380 lbf (6.14 kN)	1960 lbf (8.72 kN)	2400 lbf (10.68 kN)	2680 lbf (11.92 kN)

1) Brace Angles are determined from Vertical.
2) LW Refers to FM Approved Lightwall pipe, commonly referred to as Sch. 7 and Flow Pipe. See FM Approval Guide for approved Lightwall pipe.
3) Sch. 10 & 0.188" Wall Load Ratings may be used for any thicker wall pipe of the same diameter.
4) See table below for FM listed specialty pipes & FM Listed metric service pipes.
5) Load Ratings reflect 1" (DN25) – 1¼" (DN32) brace members. See table below for listed brace members.
6) Minimum safety factor of 1.5 in accordance with NFPA 13-2016 Section A.9.3.5.2.3. To convert the load ratings above to a safety factor of 2.2 per NFPA 13-2019 Section A.18.5.2.3, multiply load ratings by a factor of 0.68.
7) To convert to LRFD Load Ratings, ASD Load Ratings may be multiplied by a factor of 1.5.

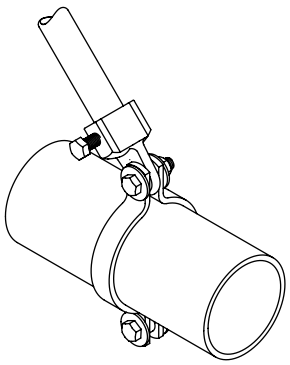

Longitudinal Application

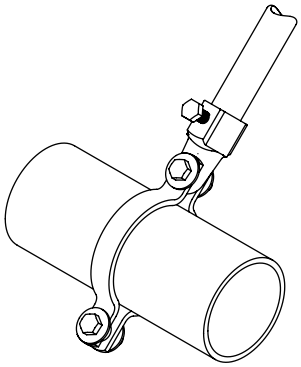

Lateral Application

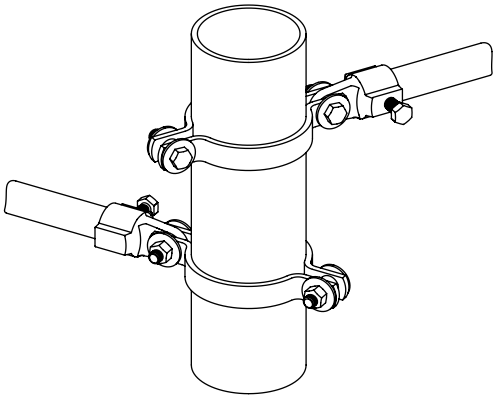

Riser Application

asc-es.com

Building connections that last™

ASC Engineered Solutions

Longitudinal & Lateral Seismic Clamp
Fig. AF775

1. Position the clamp at the desired location on the service pipe and hand tighten the hex bolts. Ensure the spacers and the brace socket attachment are positioned on the bolt between the pipe clamps ears.
2. Insert brace pipe into the socket until the brace pipe bottoms out..
3. Torque set screw until the head breaks off.
4. Ensure the brace angle is within the specified range.
5. Tighten the clamp bolts and nuts equally and alternately until metal to metal contact is achieved with the proper torque value.

FIG. AF775 cULus Listed & FM Approved Brace Members

Brace Member	Sizes	Standards (or Equivalent)	UL Listed	FM Approved
Sch. 40 NPS Pipe	1", 1¼"	ASTM A53, A106, A135, or A795	✓	✓
Sch. 40 Metric Pipe	DN25 DN32	KS D 3562	✓	✓
Metric Pipe		EN10255H		✓
		GB/T 3091		✓
		JIS G3454		✓

FIG. AF775 cULus Listed & FM Approved Metric Service Pipes

Service Pipe Sizes (or Equivalent)	Service Pipe Sizes	UL Listed	FM Approved
KS D 3507 KS D 3537	DN65 DN80 DN100 DN125 DN150 DN200	✓	✓
KS D 3562 Sch. 40		✓	✓
GB/T 3091 GB/T 3092			✓
JIS G3452			✓
EN 10255M			✓
EN 10255H			✓

Notes:

ASC Engineered Solutions™ brand bracing components are designed to be compatible ONLY with other ASC Engineered Solutions brand bracing components, resulting in a Listed seismic bracing assembly. Updated UL listing information may be viewed at www.ul.com and updated FM approval information may be viewed at www.approval-guide.com.

Disclaimer:

ASC Engineered Solutions™ does not provide any warranties and specifically disclaims any liability whatsoever with respect to ASC bracing products and components that are used in combination with products, parts or systems not manufactured or sold by ASC. In no event shall ASC be liable for any incidental, direct, consequential, special or indirect damages or lost profits where non-ASC bracing components have been, or are used.

Seis Brace® Seismic Fire Protection Design Tool may be accessed at www.seisbrace.com

asc-es.com

Building connections that last™

ASC Engineered Solutions

Universal Structural Brace Attachment
Fig. AF778

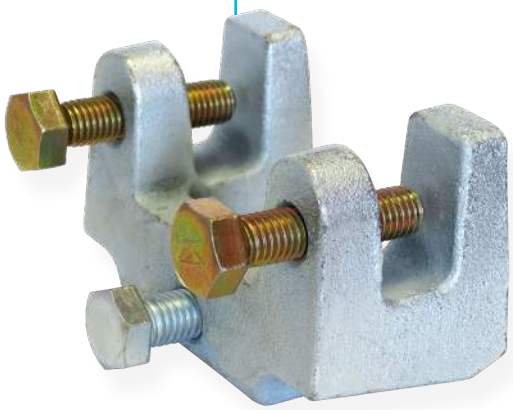

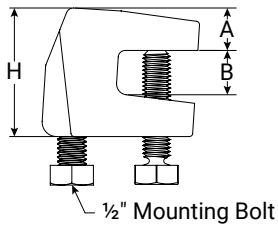

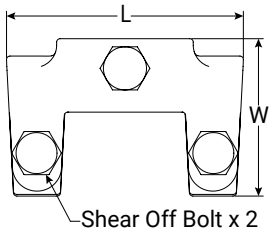

OPM-0351-13 LISTED APPROVED

FIG. AF778 Dimensions and Weight

Mounting Bolt	A	B	L	W	H	Weight
	In./mm	In./mm	In./mm	In./mm	In./mm	lbs/kg
½"	0.75	0.75	4.13	2.75	2.25	2.26
(M12)	19.1	19.1	104.8	69.9	57.2	1.03

Installation Instructions

1. Place the AF778 on a horizontal or vertical steel flange.
2. Hand tighten the set screws until they contact the flange. Continue to torque the set screws until the heads break off.
3. Mount the AF700, AF771, or AF076 to the ½" mounting bolt. The mounting bolt shall be installed wrench tight (typically finger tight plus ¼ to ½ turns).

Notes: When installed with the AF700, AF771, or AF076, the lowest load rating at angle shall control the load rating of the assembly.

Material Specifications

Size Range:
Flange Thickness: ⅛" to ¾" thick

Material
Ductile Iron Casting with Carbon Steel Hardware

Finish
☐ Plain
☐ Electro-Galvanized per ASTM B633

Service
A seismic structural attachment designed to attach to steel I-beams, flanges, and joists. The AF778 rigidly braces piping systems subjected to horizontal and vertical seismic loads.

Approvals
cULus Listed (ANSI/UL 203a), FM Approved (FM 1950-13), & OSHPD (OPM-0351-13). Complies with NFPA 13, ASCE 7, IBC, & MSS SP-127 bracing requirements.

Features
- The set screw provides a visual indication that proper installation has been achieved
- May be installed anywhere a Fig 92 standard throat beam clamp may be installed

Ordering
Specify figure number, finish, and description.

AFCON
An ASC Engineered Solution

PROJECT INFORMATION	APPROVAL STAMP
Project: M - Cogen	☐ Approved
Address:	☐ Approved as noted
Contractor:	☐ Not approved
Engineer:	Remarks:
Submittal Date: February 16, 2026	
Notes 1:	
Notes 2:	

ASC Engineered Solutions

Universal Structural Brace Attachment
Fig. AF778

FIG. AF778 cULus Listing per ANSI/UL 203a (ASD)

Structure	Load Orientation	Flange Thickness	Horizontal Load Rating at Brace Angle			
			30°-44°	45°-59°	60°-90°	Listed
		In./(mm)	Lbf/(kN)	Lbf/(kN)	Lbf/(kN)	Lbf/kN
Horizontal Steel Flange and Vertical Steel Flange	Parallel to Flange Perpendicular to Flange	0.1875 – 0.750 (4.76 – 19.05)	800 (3.56)	1131 (5.03)	1385 (6.16)	1600 (7.12)

1) Listed for installation with Fig. AF700, AF771, and AF076
2) Brace Angles are determined from Vertical.
3) Listed load ratings reduced for angle ranges in accordance with NFPA 13-2019 Table 18.5.2.3.
4) Minimum safety factor of 2.2 in accordance with NFPA 13-2019 Section A.18.5.2.3.

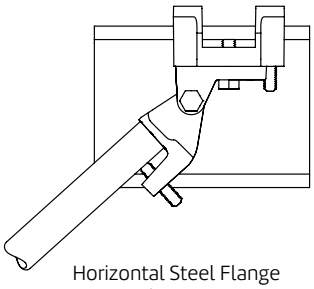

Horizontal Steel Flange
Seismic Load Parallel to Flange

FIG. AF778 cULus Listing per UL 203a (ASD) for NFPA 13-2016 Editions or Earlier

UL's current Listings are predicated on installation in accordance with the latest edition of NFPA 13. The 2016 and earlier editions of NFPA 13 referenced a minimum safety factor of 1.5 for the load rating as compared to 2.2 for the current edition. The load ratings noted in this table are consistent with the historical cULus Listings that were evaluated to the requirements of UL 203A, Outline of Investigation for Sway Brace Devices for Fire Sprinkler System Piping, based upon a minimum safety factor of 1.5 in accordance with the earlier editions of NFPA 13. The load ratings based upon the 2016 or earlier editions of NFPA 13 should only be used where approved by the Authority Having Jurisdiction (AHJ).

Structure	Load Orientation	Flange Thickness	Horizontal Load Rating at Brace Angle			
			30°-44°	45°-59°	60°-90°	Listed
		In./(mm)	Lbf/(kN)	Lbf/(kN)	Lbf/(kN)	Lbf/kN
Horizontal Steel Flange and Vertical Steel Flange	Parallel to Flange Perpendicular to Flange	0.1875 – 0.249 (4.76 – 6.32)	500 (2.22)	707 (3.15)	865 (3.85)	1000 (4.45)
		0.250 – 0.499 (6.35 – 12.67)	800 (3.56)	1131 (5.03)	1385 (6.16)	1600 (7.12)
		0.500 – 0.750 (12.70 – 19.05)	1007 (4.48)	1425 (6.34)	1744 (7.76)	2015 (8.96)

1) Listed for installation with Fig. AF700 & AF771
2) Brace Angles are determined from Vertical.
3) Listed load ratings reduced for angle ranges in accordance with NFPA 13-2016 Table 9.3.5.2.3.
4) Minimum safety factor of 1.5 in accordance with NFPA 13-2016 Section A.9.3.5.2.3.

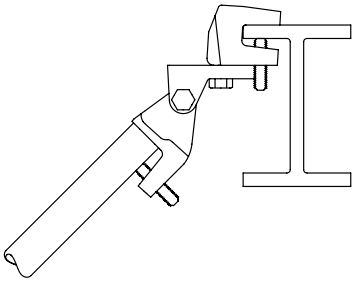

Horizontal Steel Flange
Seismic Load Perpendicular to Flange

FIG. AF778 FM Approved (Listing) per FM 1950-13 (ASD)

Structure	Load Orientation	Flange Thickness	Horizontal Load Rating at Brace Angle			
			30°-44°	45°-59°	60°-74°	75°-90°
		In./(mm)	Lbf/(kN)	Lbf/(kN)	Lbf/(kN)	Lbf/kN
Horizontal Steel Flange	Parallel to Flange	0.125–0.750 (3.18–19.05)	1280 (5.69)	1840 (8.18)	2210 (9.83)	2470 (10.99)
	Perpendicular to Flange		1570 (6.98)	1490 (6.63)	1040 (4.63)	1150 (5.12)
Vertical Steel Flange	Parallel to Flange		870 (3.87)	1440 (6.41)	1230 (5.47)	1360 (6.05)
	Perpendicular to Flange		1038 (4.58)	2260 (10.05)	2490 (11.08)	2750 (12.23)

1) Listed for installation with Fig. AF700 & AF771
2) Brace Angles are determined from Vertical.
3) Listed load ratings reduced for angle ranges in accordance with NFPA 13-2019 Table 18.5.2.3.
4) Minimum safety factor of 1.5 in accordance with NFPA 13-2016 Section A.9.3.5.2.3. To convert the load ratings above to a safety factor of 2.2 per NFPA 13-2019 Section A.18.5.2.3, multiply load ratings by a factor of 0.68.
5) To convert to LRFD Load Ratings, ASD Load Ratings may be multiplied by a factor of 1.5

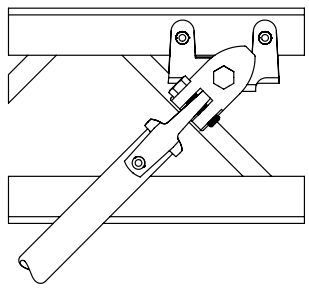

Vertical Steel Flange
Seismic Load Parallel to Flange

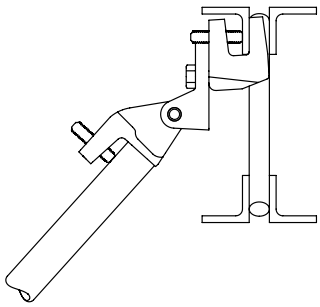

Vertical Steel Flange
Seismic Load Perpendicular to Flange

Notes:

ASC Engineered Solutions™ brand bracing components are designed to be compatible ONLY with other ASC Engineered Solutions brand bracing components, resulting in a Listed seismic bracing assembly. Updated UL listing information may be viewed at www.ul.com and updated FM approval information may be viewed at www.approvalguide.com.

Disclaimer:

ASC Engineered Solutions™ does not provide any warranties and specifically disclaims any liability whatsoever with respect to ASC bracing products and components that are used in combination with products, parts or systems not manufactured or sold by ASC. In no event shall ASC be liable for any incidental, direct, consequential, special or indirect damages or lost profits where non-ASC bracing components have been, or are used.

Seis Brace® Seismic Fire Protection Design Tool may be accessed at www.seisbrace.com

asc-es.com

Building connections that last™

ASC Engineered Solutions

Adjustable Steel Beam Attachment
Fig. AF772

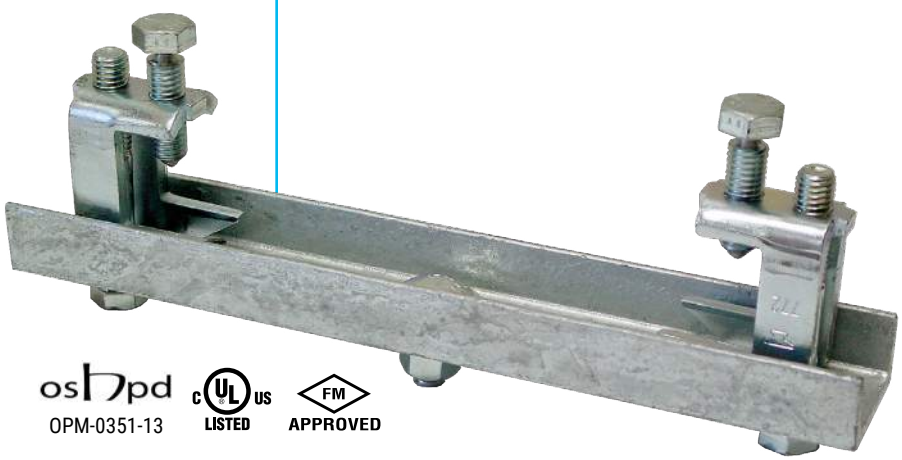

OPM-0351-13 LISTED APPROVED

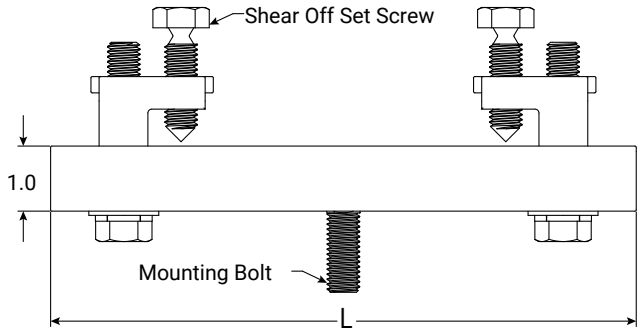

Material Specifications

Size Range:
Flange Thickness: ⅜" – 1¼"
Flange Widths: 4" – 15"

Material
Carbon Steel

Finish
☐ Plain
☐ Electro-Galvanized per ASTM B633

Service
A seismic structural attachment designed to attach to steel I-beams. AF772 rigidly braces piping systems subjected to horizontal and vertical seismic loads.

Approvals
cULus Listed (ANSI/UL 203a), FM Approved (FM 1950-13), & OSHPD (OPM-0351-13). Complies with NFPA 13, ASCE 7, IBC, & MSS SP-127 bracing requirements.

Features
- The set screw provides a visual indication that proper installation has been achieved
- Centers the AF700, AF771, and AF076 below the beam

Ordering
Specify figure number, type, length, finish, and description.

FIG. AF772 Dimensions (Type A)

Type	Length (L) In./mm	Beam Width In./mm	Mounting Bolt
A	9 229	4 - 7 102 - 178	½" (M12)
	12 305	7 - 10 178 - 254	
	14 356	9 - 12 229 - 305	

FIG. AF772 Dimensions (Type B)

Type	Length (L) In./mm	Beam Width In./mm	Mounting Bolt
B	9 229	4 - 7 102 - 178	½" (M12)
	12 305	7 - 10 178 - 254	
	14 356	9 - 12 229 - 305	
	17 432	12- 14 305 - 356	

AFCON An ASC Engineered Solution

PROJECT INFORMATION	APPROVAL STAMP
Project: M - Cogen	☐ Approved
Address:	☐ Approved as noted
Contractor:	☐ Not approved
Engineer:	Remarks:
Submittal Date: February 16, 2026	
Notes 1:	
Notes 2:	

ASC Engineered Solutions

Adjustable Steel Beam Attachment
Fig. AF772

FIG. AF772 cULus Listing per ANSI/UL 203a (ASD)

Type	Flange	Load Orientation	Horizontal Load Rating at Brace Angle			
			30°-44°	45°-59°	60°-90°	Listed
A	0.500 – 0.750 in (12.70 – 19.05 mm)	Parallel to Flange and Perpendicular to Flange	340 lbf (1.51 kN)	480 lbf (2.15 kN)	588 lbf (2.62 kN)	680 lbf (3.20 kN)
B	0.751 – 1.250 in (19.08 – 31.75 mm)					

1) Listed for installation with Fig. AF700, AF771, and AF076.
2) Brace Angles are determined from Vertical.
3) Listed load ratings reduced for angle ranges in accordance with NFPA 13-2019 Table 18.5.2.3.
4) Minimum safety factor of 2.2 in accordance with NFPA 13-2019 Section A.18.5.2.3.

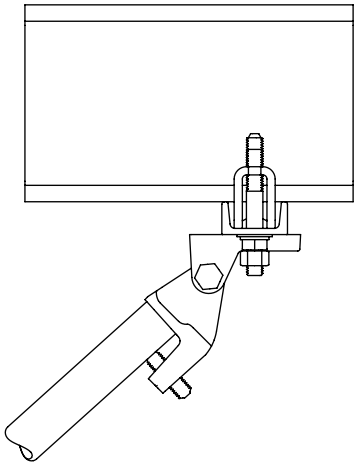

Horizontal Steel Flange
Seismic Load Parallel to Flange

FIG. AF772 cULus Listing per UL 203a (ASD) for NFPA 13-2016 Editions or Earlier

UL's current Listings are predicated on installation in accordance with the latest edition of NFPA 13. The 2016 and earlier editions of NFPA 13 referenced a minimum safety factor of 1.5 for the load rating as compared to 2.2 for the current edition. The load ratings noted in this table are consistent with the historical cULus Listings that were evaluated to the requirements of UL 203A, Outline of Investigation for Sway Brace Devices for Fire Sprinkler System Piping, based upon a minimum safety factor of 1.5 in accordance with the earlier editions of NFPA 13. The load ratings based upon the 2016 or earlier editions of NFPA 13 should only be used where approved by the Authority Having Jurisdiction (AHJ).

Type	Flange	Load Orientation	Horizontal Load Rating at Brace Angle			
			30°-44°	45°-59°	60°-90°	Listed
A	0.500 – 0.750 in (12.70 – 19.05 mm)	Parallel to Flange	500 lbf (2.22 kN)	707 lbf (3.15 kN)	865 lbf (3.85 kN)	1000 lbf (3.20 kN)
		Perpendicular to Flange	800 lbf (3.56 kN)	1131 lbf (5.03 kN)	1385 lbf (6.16 kN)	1600 lbf (7.12 kN)
B	0.751 – 1.250 in (19.08 – 31.75 mm)	Parallel to Flange and Perpendicular to Flange	500 lbf (2.22 kN)	707 lbf (3.14 kN)	865 lbf (3.85 kN)	1000 lbf (3.20 kN)

1) Listed for installation with Fig. AF700 & AF771.
2) Brace Angles are determined from Vertical.
3) Listed load ratings reduced for angle ranges in accordance with NFPA 13-2016 Table 9.3.5.2.3.
4) Minimum safety factor of 1.5 in accordance with NFPA 13-2016 Section A.9.3.5.2.3.

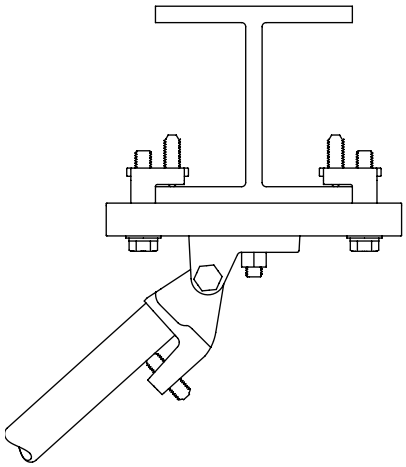

Horizontal Steel Flange
Seismic Load Perpendicular to Flange

FIG. AF772 FM Approved (Listing) per FM 1950-13 (ASD)

Type	Flange	Load Orientation	Horizontal Load Rating at Brace Angle			
			30°-44°	45°-59°	60°-74°	75°-90°
A	0.500 – 0.750 in (9.53 – 19.05 mm)	Parallel to Flange	470 lbf (2.09 kN)	480 lbf (2.14 kN)	580 lbf (2.58 kN)	640 lbf (2.85 kN)
		Perpendicular to Flange	540 lbf (2.4 kN)	710 lbf (3.16 kN)	880 lbf (3.91 kN)	980 lbf (4.36 kN)
B	0.751 – 1.250 in (19.08 – 31.75 mm)	Parallel to Flange	330 lbf (1.47 kN)	640 lbf (2.85 kN)	790 lbf (3.51 kN)	880 lbf (3.91 kN)
		Perpendicular to Flange	470 lbf (2.09 kN)	740 lbf (3.29 kN)	910 lbf (4.05 kN)	1010 lbf (4.49 kN)

1) Listed for installation with Fig. AF700 & AF771
2) Brace Angles are determined from Vertical.
3) Minimum safety factor of 1.5 in accordance with NFPA 13-2016 Section A.9.3.5.2.3. To convert the load ratings above to a safety factor of 2.2 per NFPA 13-2019 Section A.18.5.2.3, multiply load ratings by a factor of 0.68.
4) To convert to LRFD Load Ratings, ASD Load Ratings may be multiplied by a factor of 1.5.

Notes:
ASC Engineered Solutions™ brand bracing components are designed to be compatible ONLY with other ASC Engineered Solutions brand bracing components, resulting in a Listed seismic bracing assembly. Updated UL listing information may be viewed at www.ul.com and updated FM approval information may be viewed at www.approvalguide.com.

Disclaimer:

ASC Engineered Solutions does not provide any warranties and specifically disclaims any liability whatsoever with respect to ASC bracing products and components that are used in combination with products, parts or systems not manufactured or sold by ASC. In no event shall ASC be liable for any incidental, direct, consequential, special or indirect damages or lost profits where non-ASC bracing components have been, or are used.

Seis Brace® Seismic Fire Protection Design Tool may be accessed at www.seisbrace.com

asc-es.com

Building connections that last™

APPENDIX B

FIRE PROTECTION HYDRAULIC CALCULATIONS

HYDRAULIC CALCULATIONS

FOR

MORONGO COGEN

ELECTRIC ROOM

FILE NUMBER: ELECTRIC ROOM ORDINARY HAZARD

DATE: APR 28, 2026

-DESIGN DATA-

OCCUPANCY CLASSIFICATION:	ORDINARY HAZARD GROUP 1
DENSITY:	0.15 gpm/sq. ft.
AREA OF APPLICATION:	1,500 sq. ft. (ACTUAL 1,387 sq. ft. ENTIRE ROOM)
COVERAGE PER SPRINKLER:	100 sq. ft. SSU
NUMBER OF SPRINKLERS CALCULATED:	15 sprinklers
TOTAL SPRINKLER WATER FLOW REQUIRED:	239.5 gpm
TOTAL WATER REQUIRED (including hose):	489.4 gpm
FLOW AND PRESSURE (@ BR):	239.5 gpm @ 20.6 psi
SPRINKLER K-FACTOR:	K=5.6
AUTHORITY HAVING JURISDICTION:	MORONGO FIRE DEPARTMENT

DATE: 4/28/2026RONGO CHP COGEN DESIGN\HYDRAULIC CALCS\ELECTRICAL ROOM.SDF
JOB TITLE:

WATER SUPPLY DATA

SOURCE NODE TAG	STATIC PRESS. (PSI)	RESID. PRESS. (PSI)	@ FLOW (GPM)	AVAIL. PRESS. (PSI)	@ TOTAL DEMAND (GPM)	REQ'D PRESS. (PSI)
EP	54.0	46.0	1750.0	53.2	489.4	34.6

AGGREGATE FLOW ANALYSIS:

TOTAL FLOW AT SOURCE	489.4 GPM
TOTAL HOSE STREAM ALLOWANCE AT SOURCE	250.0 GPM
OTHER HOSE STREAM ALLOWANCES	0.0 GPM
TOTAL DISCHARGE FROM ACTIVE SPRINKLERS	239.4 GPM

NODE ANALYSIS DATA

NODE TAG	ELEVATION (FT)	NODE TYPE	PRESSURE (PSI)	DISCHARGE (GPM)	AREA (FT^2)	DENSITY REQ. (GPM/FT^2)	DENSITY ACT. (GPM/FT^2)
EP	-3.0	SOURCE	34.6	239.4	- - -	- - -	- - -
U1	-3.0	- - - -	34.5	- - -	- - -	- - -	- - -
BF1	2.0	- - - -	32.3	- - -	- - -	- - -	- - -
BF2	2.0	- - - -	20.3	- - -	- - -	- - -	- - -
F	-3.0	- - - -	22.4	- - -	- - -	- - -	- - -
BR	1.0	- - - -	20.6	- - -	- - -	- - -	- - -
TR	9.4	- - - -	16.9	- - -	- - -	- - -	- - -
B1	9.4	- - - -	16.9	- - -	- - -	- - -	- - -
D1	9.4	- - - -	13.3	- - -	- - -	- - -	- - -
D2	12.7	- - - -	11.2	- - -	- - -	- - -	- - -
D3	12.7	- - - -	10.6	- - -	- - -	- - -	- - -
D4	12.7	- - - -	10.4	- - -	- - -	- - -	- - -
D5	12.7	- - - -	10.3	- - -	- - -	- - -	- - -
F1	12.7	K= 5.60	10.4	18.1	100.0	0.150	0.181
F2	12.7	K= 5.60	8.4	16.3	100.0	0.150	0.163
F3	12.7	K= 5.60	7.8	15.6	100.0	0.150	0.156
F4	12.7	K= 5.60	7.4	15.3	100.0	0.150	0.153
F5	12.7	K= 5.60	7.4	15.2	100.0	0.150	0.152
F6	12.7	K= 5.60	10.2	17.9	100.0	0.150	0.179
F7	12.7	K= 5.60	8.3	16.1	100.0	0.150	0.161
F8	12.7	K= 5.60	7.6	15.4	100.0	0.150	0.154
F9	12.7	K= 5.60	7.3	15.1	100.0	0.150	0.151
F10	12.7	K= 5.60	7.2	15.0	100.0	0.150	0.150
F11	12.7	K= 5.60	10.2	17.9	100.0	0.150	0.179
F12	12.7	K= 5.60	8.2	16.1	100.0	0.150	0.161
F13	12.7	K= 5.60	7.6	15.4	100.0	0.150	0.154
F14	12.7	K= 5.60	7.3	15.1	100.0	0.150	0.151
F15	12.7	K= 5.60	7.2	15.0	100.0	0.150	0.150

DATE: 4/28/2026RONGO CHP COGEN DESIGN\HYDRAULIC CALCS\ELECTRICAL ROOM.SDF
JOB TITLE:

PIPE DATA

PIPE TAG END NODES	ELEV. (FT)	NOZ. (K)	PT (PSI)	DISC. (GPM)	Q(GPM) VEL(FPS)	DIA(IN) HW(C) FL/FT		LENGTH (FT)		PRESS. SUM. (PSI)
Pipe: 1					239.4	8.249	PL	250.00	PF	0.1
EP	-3.0	SRCE	34.6	(N/A)	1.4	150	FTG	TG	PE	0.0
U1	-3.0	0.0	34.5	0.0		0.000	TL	319.51	PV	
Pipe: 2					239.5	8.249	PL	40.00	PF	0.1
U1	-3.0	0.0	34.5	0.0	1.4	150	FTG	ETG	PE	-2.2
BF1	2.0	0.0	32.3	0.0		0.000	TL	141.24	PV	
Pipe: 3					FIXED PRESSURE LOSS DEVICE					
BF1	2.0	0.0	32.3	0.0	12.0 psi, 239.5 gpm					
BF2	2.0	0.0	20.3	0.0						
Pipe: 4					239.5	8.249	PL	63.00	PF	0.1
BF2	2.0	0.0	20.3	0.0	1.4	150	FTG	ET	PE	2.2
F	-3.0	0.0	22.4	0.0		0.000	TL	156.69	PV	
Pipe: 5					239.5	8.249	PL	7.00	PF	0.0
F	-3.0	0.0	22.4	0.0	1.4	150	FTG	----	PE	-1.7
BR	1.0	0.0	20.6	0.0		0.000	TL	7.00	PV	
Pipe: 6					239.5	8.249	PL	8.42	PF	0.1
BR	1.0	0.0	20.6	0.0	1.4	120	FTG	ECB	PE	-3.6
TR	9.4	0.0	16.9	0.0		0.001	TL	96.42	PV	
Pipe: 7					239.5	8.249	PL	10.33	PF	0.0
TR	9.4	0.0	16.9	0.0	1.4	120	FTG	2E	PE	0.0
B1	9.4	0.0	16.9	0.0		0.001	TL	52.33	PV	
Pipe: 8					239.5	3.260	PL	49.67	PF	3.6
B1	9.4	0.0	16.9	0.0	9.2	120	FTG	2E	PE	0.0
D1	9.4	0.0	13.3	0.0		0.051	TL	69.67	PV	
Pipe: 9					239.5	3.260	PL	3.33	PF	0.7
D1	9.4	0.0	13.3	0.0	9.2	120	FTG	E	PE	-1.4
D2	12.7	0.0	11.2	0.0		0.051	TL	13.33	PV	
Pipe: 10					239.5	3.260	PL	3.25	PF	0.7
D2	12.7	0.0	11.2	0.0	9.2	120	FTG	E	PE	0.0
D3	12.7	0.0	10.6	0.0		0.051	TL	13.25	PV	
Pipe: 11					159.1	3.260	PL	8.25	PF	0.2
D3	12.7	0.0	10.6	0.0	6.1	120	FTG	----	PE	0.0
D4	12.7	0.0	10.4	0.0		0.024	TL	8.25	PV	
Pipe: 12					79.4	3.260	PL	8.25	PF	0.1
D4	12.7	0.0	10.4	0.0	3.1	120	FTG	----	PE	0.0
D5	12.7	0.0	10.3	0.0		0.007	TL	8.25	PV	
Pipe: 13					18.1	1.682	PL	1.00	PF	0.1
D3	12.7	0.0	10.6	0.0	2.6	120	FTG	T	PE	0.0
F1	12.7	5.6	10.4	18.1		0.011	TL	11.00	PV	

DATE: 4/28/2026RONGO CHP COGEN DESIGN\HYDRAULIC CALCS\ELECTRICAL ROOM.SDF
JOB TITLE:

PIPE TAG / END NODES	ELEV. (FT)	NOZ. (K)	PT (PSI)	DISC. (GPM)	Q(GPM) VEL(FPS)	DIA(IN) HW(C) FL/FT		LENGTH (FT)		PRESS. SUM. (PSI)
Pipe: 14					62.3	1.682	PL	10.00	PF	2.1
D3	12.7	0.0	10.6	0.0	9.0	120	FTG	T	PE	0.0
F2	12.7	5.6	8.4	16.3		0.107	TL	20.00	PV	
Pipe: 15					46.1	1.682	PL	11.00	PF	0.7
F2	12.7	5.6	8.4	16.3	6.7	120	FTG	----	PE	0.0
F3	12.7	5.6	7.8	15.6		0.061	TL	11.00	PV	
Pipe: 16					30.5	1.682	PL	11.00	PF	0.3
F3	12.7	5.6	7.8	15.6	4.4	120	FTG	----	PE	0.0
F4	12.7	5.6	7.4	15.3		0.028	TL	11.00	PV	
Pipe: 17					15.2	1.682	PL	11.00	PF	0.1
F4	12.7	5.6	7.4	15.3	2.2	120	FTG	----	PE	0.0
F5	12.7	5.6	7.4	15.2		0.008	TL	11.00	PV	
Pipe: 19					17.9	1.682	PL	1.00	PF	0.1
D4	12.7	0.0	10.4	0.0	2.6	120	FTG	T	PE	0.0
F6	12.7	5.6	10.2	17.9		0.011	TL	11.00	PV	
Pipe: 20					61.7	1.682	PL	10.00	PF	2.1
D4	12.7	0.0	10.4	0.0	8.9	120	FTG	T	PE	0.0
F7	12.7	5.6	8.3	16.1		0.105	TL	20.00	PV	
Pipe: 21					45.6	1.682	PL	11.00	PF	0.7
F7	12.7	5.6	8.3	16.1	6.6	120	FTG	----	PE	0.0
F8	12.7	5.6	7.6	15.4		0.060	TL	11.00	PV	
Pipe: 22					30.2	1.682	PL	11.00	PF	0.3
F8	12.7	5.6	7.6	15.4	4.4	120	FTG	----	PE	0.0
F9	12.7	5.6	7.3	15.1		0.028	TL	11.00	PV	
Pipe: 23					15.0	1.682	PL	11.00	PF	0.1
F9	12.7	5.6	7.3	15.1	2.2	120	FTG	----	PE	0.0
F10	12.7	5.6	7.2	15.0		0.008	TL	11.00	PV	
Pipe: 25					17.9	1.682	PL	1.00	PF	0.1
D5	12.7	0.0	10.3	0.0	2.6	120	FTG	T	PE	0.0
F11	12.7	5.6	10.2	17.9		0.011	TL	11.00	PV	
Pipe: 26					61.5	1.682	PL	10.00	PF	2.1
D5	12.7	0.0	10.3	0.0	8.9	120	FTG	T	PE	0.0
F12	12.7	5.6	8.2	16.1		0.104	TL	20.00	PV	
Pipe: 27					45.5	1.682	PL	11.00	PF	0.7
F12	12.7	5.6	8.2	16.1	6.6	120	FTG	----	PE	0.0
F13	12.7	5.6	7.6	15.4		0.060	TL	11.00	PV	
Pipe: 27A					30.1	1.682	PL	11.00	PF	0.3
F13	12.7	5.6	7.6	15.4	4.3	120	FTG	----	PE	0.0
F14	12.7	5.6	7.3	15.1		0.028	TL	11.00	PV	

DATE: 4/28/2026RONGO CHP COGEN DESIGN\HYDRAULIC CALCS\ELECTRICAL ROOM.SDF
JOB TITLE:

PIPE TAG END NODES	ELEV. (FT)	NOZ. (K)	PT (PSI)	DISC. (GPM)	Q(GPM) VEL(FPS)	DIA(IN) HW(C) FL/FT	LENGTH (FT)	PRESS. SUM. (PSI)
Pipe: 27B					15.0	1.682 PL	11.00	PF 0.1
F14	12.7	5.6	7.3	15.1	2.2	120 FTG	----	PE 0.0
F15	12.7	5.6	7.2	15.0		0.008 TL	11.00	PV

NOTES (HASS):

(1) Calculations were performed by the HASS computer program
in accordance with NFPA (2020)
under license no. 65847320 granted by
HRS Systems, Inc.
208 Southside Square
Petersburg, TN 37144
(931) 659-9760

(2) The system has been calculated to provide an average
imbalance at each node of 0.005 gpm and a maximum
imbalance at any node of 0.138 gpm.

(3) Total pressure at each node is used in balancing the system.
Maximum water velocity is 9.2 ft/sec at pipe 10.

(4) Items listed in bold print on the cover sheet

are automatically transferred from the calculation report.

(5) PIPE FITTINGS TABLE

HASS Pipe Table Name: standard

PAGE: B MATERIAL: THNWL HWC: 120

Diameter (in)	Equivalent Fitting Lengths in Feet								
	E Ell	T Tee	L LngEll	C ChkVlv	B BfyVlv	G GatVlv	A AlmChk	D DPVlv	N NPTee
	F F45Ell								
1.682	5.00	10.00	3.00	11.00	8.00	1.00	12.00	12.00	10.00
	2.50								
3.260	10.00	20.00	7.00	22.00	14.00	1.00	18.00	18.00	20.00
	5.00								
8.249	21.00	41.00	15.00	53.00	14.00	5.00	37.00	37.00	41.00
	10.50								

DATE: 4/28/2026RONGO CHP COGEN DESIGN\HYDRAULIC CALCS\ELECTRICAL ROOM.SDF
JOB TITLE:

WATER SUPPLY ANALYSIS

Static: 54.00 psi Resid: 46.00 psi Flow: 1750.0 gpm

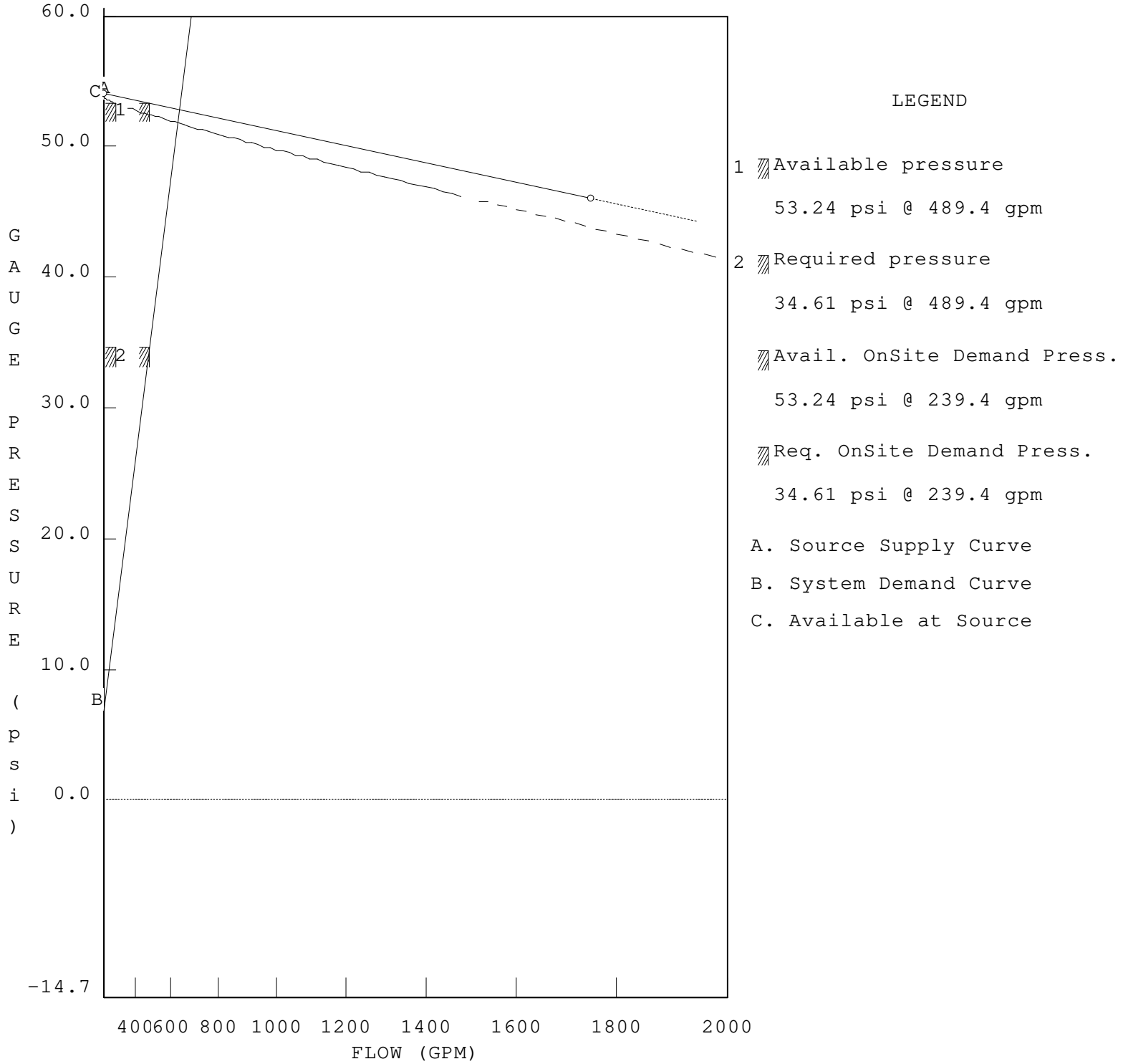

Note: (1) Dashed Lines indicate extrapolated values from Test Results

(2) On Site pressures are based on hose stream deduction at the source

DATE: 4/28/2026RONGO CHP COGEN DESIGN\HYDRAULIC CALCS\ELECTRICAL ROOM.SDF
JOB TITLE:

WATER SUPPLY CURVE

```
   60+
     |
     |
     |
   55+
     *\\\\0\\\
     |        \\\\\\\\
     |                \\\\\\\\\
   50+                         \\\\\\\\
     |                                 \\\\\\\\\
     |                                          \\\\\\\\
     |                            46.0 psi @ 1750 gpm-> *
   45+                             Flow Test Point
     |
     |
     |
 P 40+
 R   |
 E   |
 S   |
 S 35+    X
 U   |
 R   |
 E   |
   30+
 (   |
 P   |
 S   |
 I 25+
 )   |
     |
     |
   20+
     |
     |
     |
   15+
     |
     |
     |==============================
   10+            LEGEND             "
     |                               "
     | X = Required Water Supply     "
     |    34.61 psi @ 489.4 gpm      "
    5+                               "
     | 0 = Available Water Supply    "
     |    53.24 psi @ 489.4 gpm      "
     |                               "
    0++-+---+----+-----+------+--------+--------+---------+-----------+
       400 600  800  1000   1200     1400     1600      1800        2000
                                    FLOW (GPM)
```

HYDRAULIC CALCULATIONS

FOR

MORONGO COGEN

REMOTE AREA 2 - GENERATOR ROOM

FILE NUMBER: GENERATOR ROOM SPECIAL HAZARD

DATE: APR 28, 2026

-DESIGN DATA-

OCCUPANCY CLASSIFICATION:	SPECIAL HAZARD
DENSITY:	0.30 gpm/sq. ft.
AREA OF APPLICATION:	2,500 sq. ft. (ACTUAL 2,525 sq. ft.)
COVERAGE PER SPRINKLER:	100 sq. ft. SSU
NUMBER OF SPRINKLERS CALCULATED:	47 sprinklers
TOTAL SPRINKLER WATER FLOW REQUIRED:	1195.7 gpm
TOTAL WATER REQUIRED (including hose):	1695.8 gpm
FLOW AND PRESSURE (@ BR):	1195.7 gpm @ 27.9 psi
SPRINKLER K-FACTOR:	K=8.0
AUTHORITY HAVING JURISDICTION:	MORONGO FIRE DEPARTMENT

DATE: 4/28/2026008 MORONGO CHP COGEN DESIGN\HYDRAULIC CALCS\GENERATOR.SDF
JOB TITLE:

WATER SUPPLY DATA

SOURCE NODE TAG	STATIC PRESS. (PSI)	RESID. PRESS. (PSI)	FLOW @ (GPM)	AVAIL. PRESS. (PSI)	TOTAL @ DEMAND (GPM)	REQ'D PRESS. (PSI)
EP	54.0	46.0	1750.0	46.5	1695.8	44.2

AGGREGATE FLOW ANALYSIS:

TOTAL FLOW AT SOURCE	1695.8 GPM
TOTAL HOSE STREAM ALLOWANCE AT SOURCE	500.0 GPM
OTHER HOSE STREAM ALLOWANCES	0.0 GPM
TOTAL DISCHARGE FROM ACTIVE SPRINKLERS	1195.8 GPM

NODE ANALYSIS DATA

NODE TAG	ELEVATION (FT)	NODE TYPE	PRESSURE (PSI)	DISCHARGE (GPM)	AREA (FT^2)	DENSITY REQ. (GPM/FT^2)	DENSITY ACT. (GPM/FT^2)
EP	-3.0	SOURCE	44.2	1195.8	- - -	- - -	- - -
U1	-3.0	- - - -	41.9	- - -	- - -	- - -	- - -
BF1	2.0	- - - -	38.7	- - -	- - -	- - -	- - -
BF2	2.0	- - - -	28.7	- - -	- - -	- - -	- - -
F	-3.0	- - - -	29.7	- - -	- - -	- - -	- - -
BR	1.0	- - - -	27.9	- - -	- - -	- - -	- - -
TR	9.4	- - - -	23.2	- - -	- - -	- - -	- - -
E1	9.4	- - - -	21.9	- - -	- - -	- - -	- - -
E2	22.4	- - - -	15.9	- - -	- - -	- - -	- - -
M1	22.4	- - - -	14.6	- - -	- - -	- - -	- - -
M2	22.4	- - - -	14.6	- - -	- - -	- - -	- - -
M3	22.4	- - - -	14.6	- - -	- - -	- - -	- - -
M4	22.4	- - - -	14.5	- - -	- - -	- - -	- - -
M5	22.4	- - - -	14.5	- - -	- - -	- - -	- - -
M6	22.4	- - - -	14.5	- - -	- - -	- - -	- - -
M7	22.4	- - - -	14.5	- - -	- - -	- - -	- - -
M8	22.4	- - - -	14.5	- - -	- - -	- - -	- - -
M9	22.4	- - - -	14.5	- - -	- - -	- - -	- - -
N1	23.8	- - - -	13.5	- - -	- - -	- - -	- - -
N2	23.8	- - - -	13.2	- - -	- - -	- - -	- - -
N3	23.8	- - - -	13.1	- - -	- - -	- - -	- - -
N4	23.8	- - - -	13.1	- - -	- - -	- - -	- - -
N5	23.6	- - - -	12.5	- - -	- - -	- - -	- - -
N6	23.6	- - - -	13.2	- - -	- - -	- - -	- - -
N7	23.6	- - - -	12.8	- - -	- - -	- - -	- - -
N8	23.6	- - - -	13.2	- - -	- - -	- - -	- - -
N9	23.6	- - - -	13.1	- - -	- - -	- - -	- - -
S1	24.0	K= 7.53	12.0	26.0	80.0	0.300	0.325
S2	24.0	K= 7.53	11.4	25.4	80.0	0.300	0.318
S3	24.0	K= 7.53	11.1	25.1	80.0	0.300	0.314
S4	24.0	K= 7.53	11.0	25.0	80.0	0.300	0.313
S5	24.0	K= 7.53	13.0	27.1	80.0	0.300	0.339
S6	24.0	K= 7.53	11.7	25.7	80.0	0.300	0.321
S7	24.0	K= 7.53	11.1	25.1	80.0	0.300	0.314
S8	24.0	K= 7.53	10.8	24.8	80.0	0.300	0.310

DATE: 4/28/2026008 MORONGO CHP COGEN DESIGN\HYDRAULIC CALCS\GENERATOR.SDF
JOB TITLE:

NODE ANALYSIS DATA

NODE TAG	ELEVATION (FT)	NODE TYPE	PRESSURE (PSI)	DISCHARGE (GPM)	AREA (FT^2)	DENSITY REQ. (GPM/FT^2)	DENSITY ACT. (GPM/FT^2)
S9	24.0	K= 7.53	10.8	24.7	80.0	0.300	0.309
S10	24.0	K= 7.53	12.9	27.1	80.0	0.300	0.338
S11	24.0	K= 7.53	11.6	25.7	80.0	0.300	0.321
S12	24.0	K= 7.53	11.1	25.0	80.0	0.300	0.313
S13	24.0	K= 7.53	10.8	24.7	80.0	0.300	0.309
S14	24.0	K= 7.53	10.7	24.7	80.0	0.300	0.308
S15	24.0	K= 7.53	12.9	27.0	80.0	0.300	0.338
S16	24.0	K= 7.53	11.6	25.6	80.0	0.300	0.320
S17	24.0	K= 7.53	11.0	25.0	80.0	0.300	0.313
S18	24.0	K= 7.53	10.8	24.7	80.0	0.300	0.309
S19	24.0	K= 7.53	10.7	24.6	80.0	0.300	0.308
S20	24.0	K= 7.53	11.5	25.5	80.0	0.300	0.319
S21	24.0	K= 7.53	11.6	25.6	80.0	0.300	0.320
S22	24.0	K= 7.53	11.7	25.8	80.0	0.300	0.322
S23	24.0	K= 7.53	11.0	25.0	80.0	0.300	0.312
S24	24.0	K= 7.53	10.5	24.4	80.0	0.300	0.305
S25	24.0	K= 7.53	10.2	24.1	80.0	0.300	0.301
S26	24.0	K= 7.53	10.2	24.0	80.0	0.300	0.300
S27	24.0	K= 7.53	12.9	27.1	80.0	0.300	0.338
S28	24.0	K= 7.53	11.6	25.6	80.0	0.300	0.321
S29	24.0	K= 7.53	11.1	25.0	80.0	0.300	0.313
S30	24.0	K= 7.53	10.2	24.1	80.0	0.300	0.301
S31	23.0	K= 7.53	10.6	24.5	80.0	0.300	0.306
S32	23.0	K= 7.53	12.7	26.8	80.0	0.300	0.336
S33	23.0	K= 7.53	12.8	26.9	80.0	0.300	0.336
S34	23.0	K= 7.53	11.7	25.7	80.0	0.300	0.321
S35	23.0	K= 7.53	11.1	25.1	80.0	0.300	0.313
S36	23.0	K= 7.53	10.8	24.8	80.0	0.300	0.310
S37	23.0	K= 7.53	10.8	24.7	80.0	0.300	0.309
S38	23.0	K= 7.53	13.3	27.4	80.0	0.300	0.343
S39	23.0	K= 7.53	11.9	26.0	80.0	0.300	0.325
S40	23.0	K= 7.53	11.4	25.4	80.0	0.300	0.317
S41	23.0	K= 7.53	11.1	25.1	80.0	0.300	0.313
S42	23.0	K= 7.53	11.0	25.0	80.0	0.300	0.312
S43	23.0	K= 7.53	13.3	27.4	80.0	0.300	0.343
S44	23.0	K= 7.53	12.0	26.0	80.0	0.300	0.326
S45	23.0	K= 7.53	11.4	25.4	80.0	0.300	0.318
S46	23.0	K= 7.53	11.1	25.1	80.0	0.300	0.314
S47	23.0	K= 7.53	11.0	25.0	80.0	0.300	0.313

DATE: 4/28/2026008 MORONGO CHP COGEN DESIGN\HYDRAULIC CALCS\GENERATOR.SDF
JOB TITLE:

PIPE DATA

PIPE TAG END NODES	ELEV. (FT)	NOZ. (K)	PT (PSI)	DISC. (GPM)	Q(GPM) VEL(FPS)	DIA(IN) HW(C) FL/FT		LENGTH (FT)		PRESS. SUM. (PSI)
Pipe: 1					1195.8	8.249	PL	250.00	PF	2.3
EP	-3.0	SRCE	44.2	(N/A)	7.2	150	FTG	TG	PE	0.0
U1	-3.0	0.0	41.9	0.0		0.007	TL	319.51	PV	
Pipe: 2					1195.7	8.249	PL	40.00	PF	1.0
U1	-3.0	0.0	41.9	0.0	7.2	150	FTG	ETG	PE	-2.2
BF1	2.0	0.0	38.7	0.0		0.007	TL	141.24	PV	
Pipe: 3					FIXED PRESSURE LOSS DEVICE					
BF1	2.0	0.0	38.7	0.0	10.0 psi, 1195.7 gpm					
BF2	2.0	0.0	28.7	0.0						
Pipe: 4					1195.7	8.249	PL	63.00	PF	1.1
BF2	2.0	0.0	28.7	0.0	7.2	150	FTG	ET	PE	2.2
F	-3.0	0.0	29.7	0.0		0.007	TL	156.69	PV	
Pipe: 5					1195.7	8.249	PL	7.00	PF	0.1
F	-3.0	0.0	29.7	0.0	7.2	150	FTG	----	PE	-1.7
BR	1.0	0.0	27.9	0.0		0.007	TL	7.00	PV	
Pipe: 6					1195.7	8.249	PL	8.42	PF	1.1
BR	1.0	0.0	27.9	0.0	7.2	120	FTG	ECB	PE	-3.6
TR	9.4	0.0	23.2	0.0		0.011	TL	96.42	PV	
Pipe: 7					1195.7	8.249	PL	38.33	PF	1.3
TR	9.4	0.0	23.2	0.0	7.2	120	FTG	2ET	PE	0.0
E1	9.4	0.0	21.9	0.0		0.011	TL	121.33	PV	
Pipe: 8					1195.7	8.249	PL	13.00	PF	0.4
E1	9.4	0.0	21.9	0.0	7.2	120	FTG	E	PE	-5.6
E2	22.4	0.0	15.9	0.0		0.011	TL	34.00	PV	
Pipe: 9					1195.7	8.249	PL	30.50	PF	1.2
E2	22.4	0.0	15.9	0.0	7.2	120	FTG	2T	PE	0.0
M1	22.4	0.0	14.6	0.0		0.011	TL	112.50	PV	
Pipe: 10					1094.2	8.249	PL	4.75	PF	0.0
M1	22.4	0.0	14.6	0.0	6.6	120	FTG	----	PE	0.0
M2	22.4	0.0	14.6	0.0		0.009	TL	4.75	PV	
Pipe: 11					966.8	8.249	PL	6.67	PF	0.0
M2	22.4	0.0	14.6	0.0	5.8	120	FTG	----	PE	0.0
M3	22.4	0.0	14.6	0.0		0.007	TL	6.67	PV	
Pipe: 12					839.6	8.249	PL	5.89	PF	0.0
M3	22.4	0.0	14.6	0.0	5.0	120	FTG	----	PE	0.0
M4	22.4	0.0	14.5	0.0		0.006	TL	5.89	PV	
Pipe: 13					712.6	8.249	PL	4.33	PF	0.0
M4	22.4	0.0	14.5	0.0	4.3	120	FTG	----	PE	0.0
M5	22.4	0.0	14.5	0.0		0.004	TL	4.33	PV	

DATE: 4/28/2026008 MORONGO CHP COGEN DESIGN\HYDRAULIC CALCS\GENERATOR.SDF
JOB TITLE:

PIPE TAG / END NODES	ELEV. (FT)	NOZ. (K)	PT (PSI)	DISC. (GPM)	Q(GPM) VEL(FPS)	DIA(IN) HW(C) FL/FT		LENGTH (FT)		PRESS. SUM. (PSI)
Pipe: 14					538.3	8.249	PL	3.50	PF	0.0
M5	22.4	0.0	14.5	0.0	3.2	120	FTG	----	PE	0.0
M6	22.4	0.0	14.5	0.0		0.003	TL	3.50	PV	
Pipe: 15					411.9	8.249	PL	3.58	PF	0.0
M6	22.4	0.0	14.5	0.0	2.5	120	FTG	----	PE	0.0
M7	22.4	0.0	14.5	0.0		0.002	TL	3.58	PV	
Pipe: 16					258.0	8.249	PL	5.00	PF	0.0
M7	22.4	0.0	14.5	0.0	1.5	120	FTG	----	PE	0.0
M8	22.4	0.0	14.5	0.0		0.001	TL	5.00	PV	
Pipe: 17					129.0	8.249	PL	5.50	PF	0.0
M8	22.4	0.0	14.5	0.0	0.8	120	FTG	----	PE	0.0
M9	22.4	0.0	14.5	0.0		0.000	TL	5.50	PV	
Pipe: 19					101.6	2.469	PL	1.42	PF	0.5
M1	22.4	0.0	14.6	0.0	6.8	120	FTG	T	PE	-0.6
N1	23.8	0.0	13.5	0.0		0.041	TL	13.42	PV	
Pipe: 20					127.4	2.469	PL	1.42	PF	0.8
M2	22.4	0.0	14.6	0.0	8.5	120	FTG	T	PE	-0.6
N2	23.8	0.0	13.2	0.0		0.062	TL	13.42	PV	
Pipe: 21					127.2	2.469	PL	1.42	PF	0.8
M3	22.4	0.0	14.6	0.0	8.5	120	FTG	T	PE	-0.6
N3	23.8	0.0	13.1	0.0		0.062	TL	13.42	PV	
Pipe: 22					127.0	2.469	PL	1.42	PF	0.8
M4	22.4	0.0	14.5	0.0	8.5	120	FTG	T	PE	-0.6
N4	23.8	0.0	13.1	0.0		0.062	TL	13.42	PV	
Pipe: 23					174.3	2.469	PL	1.16	PF	1.5
M5	22.4	0.0	14.5	0.0	11.7	120	FTG	T	PE	-0.5
N5	23.6	0.0	12.5	0.0		0.111	TL	13.16	PV	
Pipe: 24					126.3	2.469	PL	1.16	PF	0.8
M6	22.4	0.0	14.5	0.0	8.5	120	FTG	T	PE	-0.5
N6	23.6	0.0	13.2	0.0		0.061	TL	13.16	PV	
Pipe: 25					154.0	2.469	PL	1.16	PF	1.2
M7	22.4	0.0	14.5	0.0	10.3	120	FTG	T	PE	-0.5
N7	23.6	0.0	12.8	0.0		0.088	TL	13.16	PV	
Pipe: 26					128.9	2.469	PL	1.16	PF	0.8
M8	22.4	0.0	14.5	0.0	8.6	120	FTG	T	PE	-0.5
N8	23.6	0.0	13.2	0.0		0.063	TL	13.16	PV	
Pipe: 27					129.0	2.469	PL	1.16	PF	0.8
M9	22.4	0.0	14.5	0.0	8.6	120	FTG	T	PE	-0.5
N9	23.6	0.0	13.1	0.0		0.063	TL	13.16	PV	

DATE: 4/28/2026008 MORONGO CHP COGEN DESIGN\HYDRAULIC CALCS\GENERATOR.SDF
JOB TITLE:

PIPE TAG END NODES	ELEV. (FT)	NOZ. (K)	PT (PSI)	DISC. (GPM)	Q(GPM) VEL(FPS)	DIA(IN) HW(C) FL/FT		LENGTH (FT)		PRESS. SUM. (PSI)
Pipe: 29					101.6	2.067	PL	5.17	PF	1.5
N1	23.8	0.0	13.5	0.0	9.7	120	FTG	T	PE	-0.1
S1	24.0	7.5	12.0	26.0		0.097	TL	15.17	PV	
Pipe: 30					75.5	2.067	PL	10.25	PF	0.6
S1	24.0	7.5	12.0	26.0	7.2	120	FTG	----	PE	0.0
S2	24.0	7.5	11.4	25.4		0.056	TL	10.25	PV	
Pipe: 32					50.1	2.067	PL	10.25	PF	0.3
S2	24.0	7.5	11.4	25.4	4.8	120	FTG	----	PE	0.0
S3	24.0	7.5	11.1	25.1		0.026	TL	10.25	PV	
Pipe: 33					25.0	2.067	PL	10.25	PF	0.1
S3	24.0	7.5	11.1	25.1	2.4	120	FTG	----	PE	0.0
S4	24.0	7.5	11.0	25.0		0.007	TL	10.25	PV	
Pipe: 34					27.1	2.067	PL	4.83	PF	0.1
N2	23.8	0.0	13.2	0.0	2.6	120	FTG	T	PE	-0.1
S5	24.0	7.5	13.0	27.1		0.008	TL	14.83	PV	
Pipe: 35					100.3	2.067	PL	5.17	PF	1.4
N2	23.8	0.0	13.2	0.0	9.6	120	FTG	T	PE	-0.1
S6	24.0	7.5	11.7	25.7		0.094	TL	15.17	PV	
Pipe: 36					74.6	2.067	PL	10.25	PF	0.6
S6	24.0	7.5	11.7	25.7	7.1	120	FTG	----	PE	0.0
S7	24.0	7.5	11.1	25.1		0.055	TL	10.25	PV	
Pipe: 37					49.5	2.067	PL	10.25	PF	0.3
S7	24.0	7.5	11.1	25.1	4.7	120	FTG	----	PE	0.0
S8	24.0	7.5	10.8	24.8		0.026	TL	10.25	PV	
Pipe: 38					24.7	2.067	PL	10.25	PF	0.1
S8	24.0	7.5	10.8	24.8	2.4	120	FTG	----	PE	0.0
S9	24.0	7.5	10.8	24.7		0.007	TL	10.25	PV	
Pipe: 39					27.1	2.067	PL	4.83	PF	0.1
N3	23.8	0.0	13.1	0.0	2.6	120	FTG	T	PE	-0.1
S10	24.0	7.5	12.9	27.1		0.008	TL	14.83	PV	
Pipe: 40					100.1	2.067	PL	5.17	PF	1.4
N3	23.8	0.0	13.1	0.0	9.6	120	FTG	T	PE	-0.1
S11	24.0	7.5	11.6	25.7		0.094	TL	15.17	PV	
Pipe: 41					74.4	2.067	PL	10.25	PF	0.6
S11	24.0	7.5	11.6	25.7	7.1	120	FTG	----	PE	0.0
S12	24.0	7.5	11.1	25.0		0.054	TL	10.25	PV	
Pipe: 42					49.4	2.067	PL	10.25	PF	0.3
S12	24.0	7.5	11.1	25.0	4.7	120	FTG	----	PE	0.0
S13	24.0	7.5	10.8	24.7		0.025	TL	10.25	PV	

DATE: 4/28/2026008 MORONGO CHP COGEN DESIGN\HYDRAULIC CALCS\GENERATOR.SDF
JOB TITLE:

PIPE TAG / END NODES	ELEV. (FT)	NOZ. (K)	PT (PSI)	DISC. (GPM)	Q(GPM) VEL(FPS)	DIA(IN) HW(C) FL/FT		LENGTH (FT)		PRESS. SUM. (PSI)
Pipe: 43					24.7	2.067	PL	10.25	PF	0.1
S13	24.0	7.5	10.8	24.7	2.4	120	FTG	----	PE	0.0
S14	24.0	7.5	10.7	24.7		0.007	TL	10.25	PV	
Pipe: 44					27.0	2.067	PL	4.83	PF	0.1
N4	23.8	0.0	13.1	0.0	2.6	120	FTG	T	PE	-0.1
S15	24.0	7.5	12.9	27.0		0.008	TL	14.83	PV	
Pipe: 45					100.0	2.067	PL	5.17	PF	1.4
N4	23.8	0.0	13.1	0.0	9.6	120	FTG	T	PE	-0.1
S16	24.0	7.5	11.6	25.6		0.094	TL	15.17	PV	
Pipe: 46					74.4	2.067	PL	10.25	PF	0.6
S16	24.0	7.5	11.6	25.6	7.1	120	FTG	----	PE	0.0
S17	24.0	7.5	11.0	25.0		0.054	TL	10.25	PV	
Pipe: 47					49.3	2.067	PL	10.25	PF	0.3
S17	24.0	7.5	11.0	25.0	4.7	120	FTG	----	PE	0.0
S18	24.0	7.5	10.8	24.7		0.025	TL	10.25	PV	
Pipe: 48					24.6	2.067	PL	10.25	PF	0.1
S18	24.0	7.5	10.8	24.7	2.4	120	FTG	----	PE	0.0
S19	24.0	7.5	10.7	24.6		0.007	TL	10.25	PV	
Pipe: 49					76.9	2.067	PL	1.00	PF	0.6
N5	23.6	0.0	12.5	0.0	7.4	120	FTG	T	PE	-0.2
S22	24.0	7.5	11.7	25.8		0.058	TL	11.00	PV	
Pipe: 50					51.1	2.067	PL	5.75	PF	0.2
S22	24.0	7.5	11.7	25.8	4.9	120	FTG	----	PE	0.0
S21	24.0	7.5	11.6	25.6		0.027	TL	5.75	PV	
Pipe: 51					25.5	2.067	PL	5.00	PF	0.1
S21	24.0	7.5	11.6	25.6	2.4	120	FTG	2E	PE	0.0
S20	24.0	7.5	11.5	25.5		0.007	TL	15.00	PV	
Pipe: 52					97.4	2.067	PL	5.17	PF	1.4
N5	23.6	0.0	12.5	0.0	9.3	120	FTG	T	PE	-0.2
S23	24.0	7.5	11.0	25.0		0.090	TL	15.17	PV	
Pipe: 53					72.5	2.067	PL	10.25	PF	0.5
S23	24.0	7.5	11.0	25.0	6.9	120	FTG	----	PE	0.0
S24	24.0	7.5	10.5	24.4		0.052	TL	10.25	PV	
Pipe: 54					48.1	2.067	PL	10.25	PF	0.2
S24	24.0	7.5	10.5	24.4	4.6	120	FTG	----	PE	0.0
S25	24.0	7.5	10.2	24.1		0.024	TL	10.25	PV	
Pipe: 55					24.0	2.067	PL	10.25	PF	0.1
S25	24.0	7.5	10.2	24.1	2.3	120	FTG	----	PE	0.0
S26	24.0	7.5	10.2	24.0		0.007	TL	10.25	PV	

DATE: 4/28/2026008 MORONGO CHP COGEN DESIGN\HYDRAULIC CALCS\GENERATOR.SDF
JOB TITLE:

PIPE TAG / END NODES	ELEV. (FT)	NOZ. (K)	PT (PSI)	DISC. (GPM)	Q(GPM) VEL(FPS)	DIA(IN) HW(C) FL/FT		LENGTH (FT)		PRESS. SUM. (PSI)
Pipe: 56					27.1	2.067	PL	1.00	PF	0.1
N6	23.6	0.0	13.2	0.0	2.6	120	FTG	T	PE	-0.2
S27	24.0	7.5	12.9	27.1		0.008	TL	11.00	PV	
Pipe: 57					99.3	2.067	PL	5.17	PF	1.4
N6	23.6	0.0	13.2	0.0	9.5	120	FTG	T	PE	-0.2
S28	24.0	7.5	11.6	25.6		0.093	TL	15.17	PV	
Pipe: 58					73.6	2.067	PL	10.25	PF	0.5
S28	24.0	7.5	11.6	25.6	7.0	120	FTG	----	PE	0.0
S29	24.0	7.5	11.1	25.0		0.053	TL	10.25	PV	
Pipe: 59					48.6	2.067	PL	13.42	PF	0.8
S29	24.0	7.5	11.1	25.0	4.6	120	FTG	4E	PE	0.0
S30	24.0	7.5	10.2	24.1		0.025	TL	33.42	PV	
Pipe: 60					24.5	2.067	PL	10.25	PF	0.1
S30	24.0	7.5	10.2	24.1	2.3	120	FTG	----	PE	0.4
S31	23.0	7.5	10.6	24.5		0.007	TL	10.25	PV	
Pipe: 61					53.7	2.067	PL	1.00	PF	0.3
N7	23.6	0.0	12.8	0.0	5.1	120	FTG	T	PE	0.3
S33	23.0	7.5	12.8	26.9		0.030	TL	11.00	PV	
Pipe: 62					26.8	2.067	PL	5.83	PF	0.0
S33	23.0	7.5	12.8	26.9	2.6	120	FTG	----	PE	0.0
S32	23.0	7.5	12.7	26.8		0.008	TL	5.83	PV	
Pipe: 63					100.3	2.067	PL	5.17	PF	1.4
N7	23.6	0.0	12.8	0.0	9.6	120	FTG	T	PE	0.3
S34	23.0	7.5	11.7	25.7		0.094	TL	15.17	PV	
Pipe: 64					74.6	2.067	PL	10.25	PF	0.6
S34	23.0	7.5	11.7	25.7	7.1	120	FTG	----	PE	0.0
S35	23.0	7.5	11.1	25.1		0.055	TL	10.25	PV	
Pipe: 65					49.5	2.067	PL	10.25	PF	0.3
S35	23.0	7.5	11.1	25.1	4.7	120	FTG	----	PE	0.0
S36	23.0	7.5	10.8	24.8		0.026	TL	10.25	PV	
Pipe: 66					24.7	2.067	PL	10.25	PF	0.1
S36	23.0	7.5	10.8	24.8	2.4	120	FTG	----	PE	0.0
S37	23.0	7.5	10.8	24.7		0.007	TL	10.25	PV	
Pipe: 67					27.4	2.067	PL	4.83	PF	0.1
N8	23.6	0.0	13.2	0.0	2.6	120	FTG	T	PE	0.3
S38	23.0	7.5	13.3	27.4		0.009	TL	14.83	PV	
Pipe: 68					101.5	2.067	PL	5.17	PF	1.5
N8	23.6	0.0	13.2	0.0	9.7	120	FTG	T	PE	0.3
S39	23.0	7.5	11.9	26.0		0.097	TL	15.17	PV	

DATE: 4/28/2026008 MORONGO CHP COGEN DESIGN\HYDRAULIC CALCS\GENERATOR.SDF
JOB TITLE:

PIPE TAG / END NODES	ELEV. (FT)	NOZ. (K)	PT (PSI)	DISC. (GPM)	Q(GPM) VEL(FPS)	DIA(IN) HW(C) FL/FT		LENGTH (FT)		PRESS. SUM. (PSI)
Pipe: 69					75.5	2.067	PL	10.33	PF	0.6
S39	23.0	7.5	11.9	26.0	7.2	120	FTG	----	PE	0.0
S40	23.0	7.5	11.4	25.4		0.056	TL	10.33	PV	
Pipe: 70					50.1	2.067	PL	10.33	PF	0.3
S40	23.0	7.5	11.4	25.4	4.8	120	FTG	----	PE	0.0
S41	23.0	7.5	11.1	25.1		0.026	TL	10.33	PV	
Pipe: 71					25.0	2.067	PL	10.33	PF	0.1
S41	23.0	7.5	11.1	25.1	2.4	120	FTG	----	PE	0.0
S42	23.0	7.5	11.0	25.0		0.007	TL	10.33	PV	
Pipe: 72					27.4	2.067	PL	4.83	PF	0.1
N9	23.6	0.0	13.1	0.0	2.6	120	FTG	T	PE	0.3
S43	23.0	7.5	13.3	27.4		0.009	TL	14.83	PV	
Pipe: 73					101.6	2.067	PL	4.83	PF	1.4
N9	23.6	0.0	13.1	0.0	9.7	120	FTG	T	PE	0.3
S44	23.0	7.5	12.0	26.0		0.097	TL	14.83	PV	
Pipe: 74					75.6	2.067	PL	10.25	PF	0.6
S44	23.0	7.5	12.0	26.0	7.2	120	FTG	----	PE	0.0
S45	23.0	7.5	11.4	25.4		0.056	TL	10.25	PV	
Pipe: 75					50.1	2.067	PL	10.25	PF	0.3
S45	23.0	7.5	11.4	25.4	4.8	120	FTG	----	PE	0.0
S46	23.0	7.5	11.1	25.1		0.026	TL	10.25	PV	
Pipe: 76					25.0	2.067	PL	10.25	PF	0.1
S46	23.0	7.5	11.1	25.1	2.4	120	FTG	----	PE	0.0
S47	23.0	7.5	11.0	25.0		0.007	TL	10.25	PV	

NOTES (HASS):

(1) Calculations were performed by the HASS computer program in accordance with NFPA (2020) under license no. 65847320 granted by
HRS Systems, Inc.
208 Southside Square
Petersburg, TN 37144
(931) 659-9760

(2) The system has been calculated to provide an average imbalance at each node of 0.001 gpm and a maximum imbalance at any node of 0.053 gpm.

(3) Total pressure at each node is used in balancing the system. Maximum water velocity is 11.7 ft/sec at pipe 23.

(4) Items listed in bold print on the cover sheet

are automatically transferred from the calculation report.

(5) PIPE FITTINGS TABLE

HASS Pipe Table Name: standard

PAGE: A MATERIAL: S40 HWC: 120

Diameter (in)	Equivalent Fitting Lengths in Feet								
	E Ell	T Tee	L LngEll	C ChkVlv	B BfyVlv	G GatVlv	A AlmChk	D DPVlv	N NTee
	F F45Ell								
2.067	5.00	10.00	3.00	11.00	6.00	1.00	10.00	10.00	10.00
	2.50								
2.469	6.00	12.00	4.00	14.00	7.00	1.00	10.00	10.00	12.00
	3.00								

PAGE: B MATERIAL: THNWL HWC: 120

Diameter (in)	Equivalent Fitting Lengths in Feet								
	E Ell	T Tee	L LngEll	C ChkVlv	B BfyVlv	G GatVlv	A AlmChk	D DPVlv	N NPTee
	F F45Ell								
8.249	21.00	41.00	15.00	53.00	14.00	5.00	37.00	37.00	41.00
	10.50								

DATE: 4/28/2026008 MORONGO CHP COGEN DESIGN\HYDRAULIC CALCS\GENERATOR.SDF
JOB TITLE:

WATER SUPPLY ANALYSIS

Static: 54.00 psi Resid: 46.00 psi Flow: 1750.0 gpm

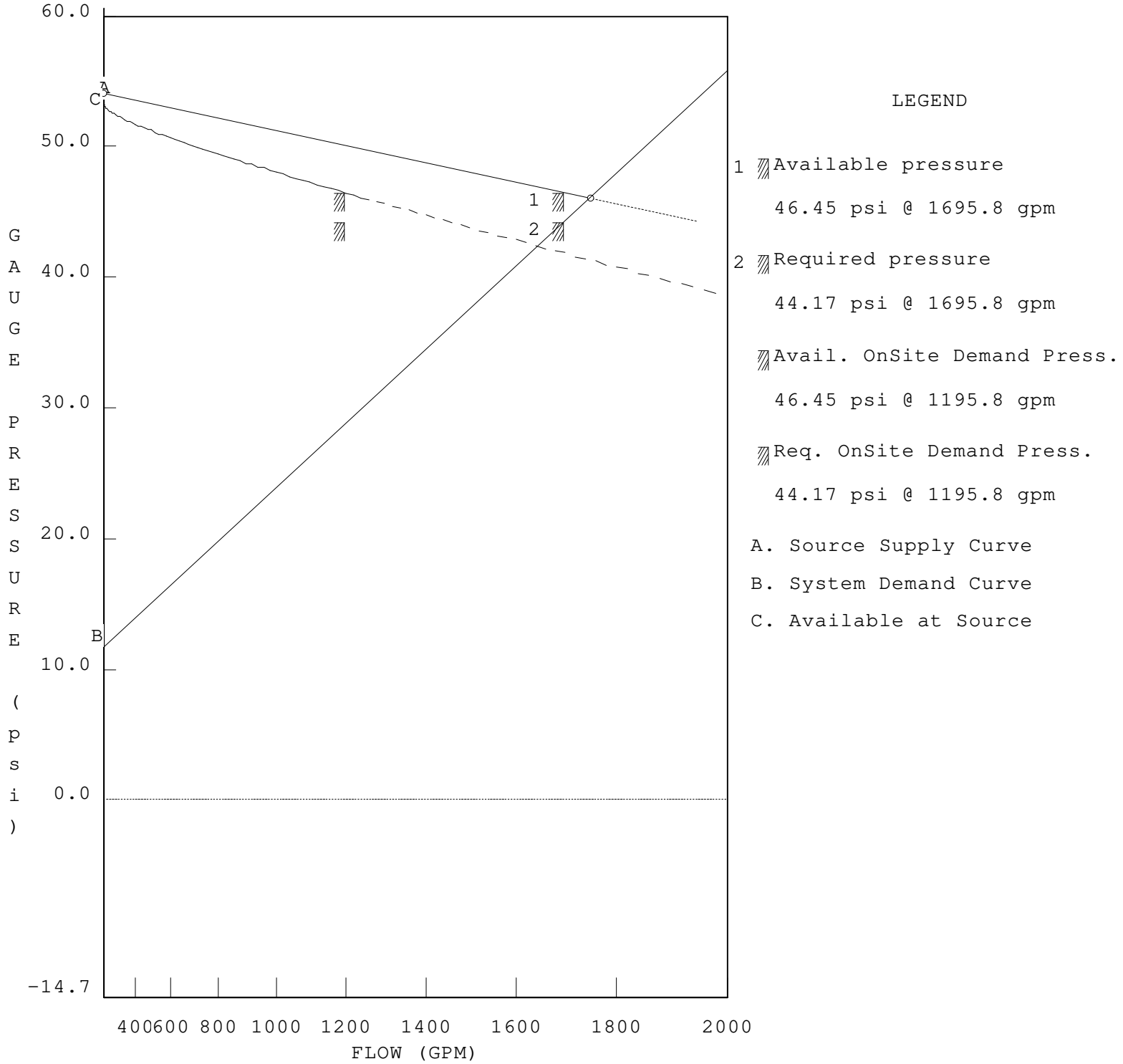

Note: (1) Dashed Lines indicate extrapolated values from Test Results

(2) On Site pressures are based on hose stream deduction at the source

DATE: 4/28/2026008 MORONGO CHP COGEN DESIGN\HYDRAULIC CALCS\GENERATOR.SDF
JOB TITLE:

WATER SUPPLY CURVE

```
   60+
     |
     |
     |
   55+
     *\\\\\\\\
     |        \\\\\\\\
     |                \\\\\\\\\
   50+                         \\\\\\\\
     |                                 \\\\\\\\\
     |                                          \\\\\\\\
     |                            46.0 psi @ 1750 gpm0> *
   45+                             Flow Test Point
     |                                            X
     |
     |
 P 40+
 R   |
 E   |
 S   |
 S 35+
 U   |
 R   |
 E   |
   30+
 (   |
 P   |
 S   |
 I 25+
 )   |
     |
     |
   20+
     |
     |
     |
   15+
     |
     |
     |==============================
   10+            LEGEND            "
     |                              "
     | X = Required Water Supply    "
     |    44.17 psi @ 1695.8 gpm    "
    5+                              "
     | 0 = Available Water Supply   "
     |    46.45 psi @ 1695.8 gpm    "
     |                              "
    0++-+---+----+-----+------+--------+--------+---------+-----------+
       400 600  800  1000   1200     1400     1600      1800        2000
                                   FLOW (GPM)
```

APPENDIX C

FIRE ALARM PRODUCT DATA SHEETS

FRE ALARM PRODUCT DATA SHEETS

Morongo Combined Heating & Power (CHP) Project

REGISTERED PROFESSIONAL ENGINEER
QUI T. DUONG
FP 1573
FIRE PROTECTION
STATE OF CALIFORNIA

PREPARED FOR

Delawie
1515 Morena Blvd
San Diego, CA 92110 USA

Project #: 1HYA25002
Date: June 4, 2026

PREPARED BY

Parrish Pelley
11545 West Bernardo Court, Suite 300
San Diego, California 92127, USA

ppelley@jensenhughes.com
619-310-9578

JENSEN HUGHES

Copyright ©2026 Jensen Hughes, Inc.
All Rights Reserved.T0123

EDWARDS
United Technologies

LIFE SAFETY & INCIDENT MANAGEMENT

EST4

Emergency Communications Platform

7165-1657
0508

Overview

EST4 is the premier emergency communications system from EDWARDS. Though it represents a small change in name from its predecessor, EST4's leap forward in capability is anything but diminutive. This exciting flagship system features a whole new network architecture that makes fire alarm, mass notification, and building integration easy to implement, quick to service, and secure in the face of today's cyberthreats.

From its thoughtfully-crafted interface to its advanced connectivity and extensive system capacity, EST4 demonstrates that form and function are inseparable elements of good system design. It provides systems engineers with the tools they need to create projects that exceed expectations and have plenty of room to grow, all while respecting facility budgets and construction schedules. The net result is an emergency communications system equally suited to new and retrofit projects; a platform that keeps property safe and steers people clear of danger.

Features

- **Investment-forward Platform Designed for the Future**
  Protects the past with backwards compatibility for EST3 retrofits, flexible feature set.
- **On-board Webserver**
  Remote device-independent access to system status reports.
- **Built-in E-mail and E-mail-to-SMS Messaging**
  Instant notification of specific event types sent to appropriate personnel.
- **Large Full-color LCD Touch Screen with Tactile Buttons**
  Fast, intuitive access to service and responder functions.
- **Five-color LED Indicators**
  System status at a glance, select the color needed during programming, reduces replacement part inventory, maximizes use of available infrastructure.
- **Network data, audio data, and telephone data share a single twisted pair or single fiber strand**
  Up to 75 percent less cabling, substantial cost savings in material and labor.
- **Backwards Compatibility with EST3**
  Wiring, devices, and most local rail modules are backward compatible, providing easy migration paths, economical transition to new technology.
- **Existing Systems Supporting only Network Data can also Support Voice Audio**
  Upgrades add value and extend capabilities in retrofit situations.

continued on next page...

Application

From the moment the control panel is powered up it is apparent that EST4 is designed for ease of use. Its powerful user interface bears this out by allowing operators to use the system with a level of fluidity that naturally guides them through high and low level system operations with efficiency and confidence.

EST4 does this by combining the simplicity of color LCD touchscreen technology with at-a-glance programmable color display strips and tactile direct-access control buttons. These input points, together with meticulously-engineered responder and service functionality, allow EST4's interface to provide clear navigation paths, instant-access shortcuts, and context-sensitive display screens. This means that responders have quick access to vital system event information and control functions, while service personnel can dive deeply into system programming unencumbered by complicated operational routines.

EST4's LCD large touch-screen display is the window into system operation and maintenance functions. It is large enough to support a graphical tree view of the system. The tree closely matches the system's physical layout, so there's no need for look-up tables to find specific devices. This is invaluable to technicians and building service personnel who can pinpoint the location of an off-normal device with a glance at the on-screen tree.

The EST4 LCD is capable of displaying 262,144 colors, EST4's LCD display screen will display eight events without scrolling. In addition to touch-screen capability, the display assembly includes four dedicated easy-access rubber buttons for control functions most needed for emergency response.

Up to 576 tactile switches and 576 LED indicators may be mounted in a single EST4 cabinet for control and annunciation purposes. Control Display Modules (CDMs), comprise a column of programmable buttons accompanied by one or two LED indicator positions per button. Indicator-only modules comprise up to 24 indicators. Switch and indicator module LEDs can be set to any of five colors, providing an additional level of feedback.

Print-anywhere slide-in label inserts give control/display strips context with color-coded shading and other effects. They can be localized for regional language requirements, and printed on-the-fly to accommodate system changes as they are implemented.

Features (continued from page 1)

- **Self-configuring Network**
  No intervention by system admin personnel required.
- **Hot Swappable Network Connections**
  Change from copper to fiber with no system down-time.
- **480 Mbps USB Ports on Panels**
  Fast configuration updates, local printing.
- **Advanced Upload/download Protocol**
  No system down-time during updates.
- **Firewalls meet the latest Advanced Encryption Standards**
  Front-line defense against threats carried by outside networks. NIST - AES Validation #4806.
- **Extended Paging Groups**
  Audio reaches occupants based on location and movement.
- **Local and Remote Reporting**
  Generate reports on-site, at system printers, or remotely via webserver.
- **20,000-event History**
  Invaluable timeline data for service and investigative purposes.
- **Cabinet Doors may be used for Nodes and Annunciators**
  Cabinet Doors may be used for Panels and Annunciators giving a consistent appearance, fewer cabinet parts.

Remote access and notification

System access to EST4 doesn't end when the cabinet door swings shut. A webserver in each EST4 panel allows authenticated users to gain access to day-to-day reporting. EST4 webservices are device-independent and support all major browsers on PC and MAC operating systems, including mobile platforms – without the need for special apps or other software. Users can log into the secure EST4 webserver and run system reports. Like any web page, system reports can be copied, printed, saved, and e-mailed. The system report data can also be saved in XML form and used in external spreadsheet applications for further processing.

EST4 keeps up with the fast pace of mobile computing with its built-in e-mail services and e-mail-to-text-message capabilities. These ensure that key personnel receive instant notification of relevant changes of system state. Technicians can be dispatched to the site within minutes of a service event, while safety and security personnel can arrive concurrently with first responders should the system go into alarm.

Networking

Supporting these important interface developments is a robust system underpinned by solid networking and exceptional security. Thanks to its self-configuring network, EST4 easily deploys and configures without intervention by network administration personnel. It adapts to a wide range of network configurations, including rings, stars, redundant segment, and full mesh topology. The network even allows changes in the physical layer from copper to fiber, and employs hot-swappable network connections at control panels and annunciators. All this improves network reliability and saves money at installation time and throughout the equipment's life cycle.

The advanced technology behind EST4's network is powerful enough to drive the biggest installations viable today. It pushes wire runs into miles, and addressable points into the many of thousands. A single IPv6 or mesh network, for example, can support copper wire runs of nearly a mile between nodes puts detection, alarm, notification, and audio into the furthest reaches of the tallest buildings and broadest campuses. Fiber optic cable handles multiple miles between nodes, while carrying all system data on a single fiber strand.

Riser Diagram

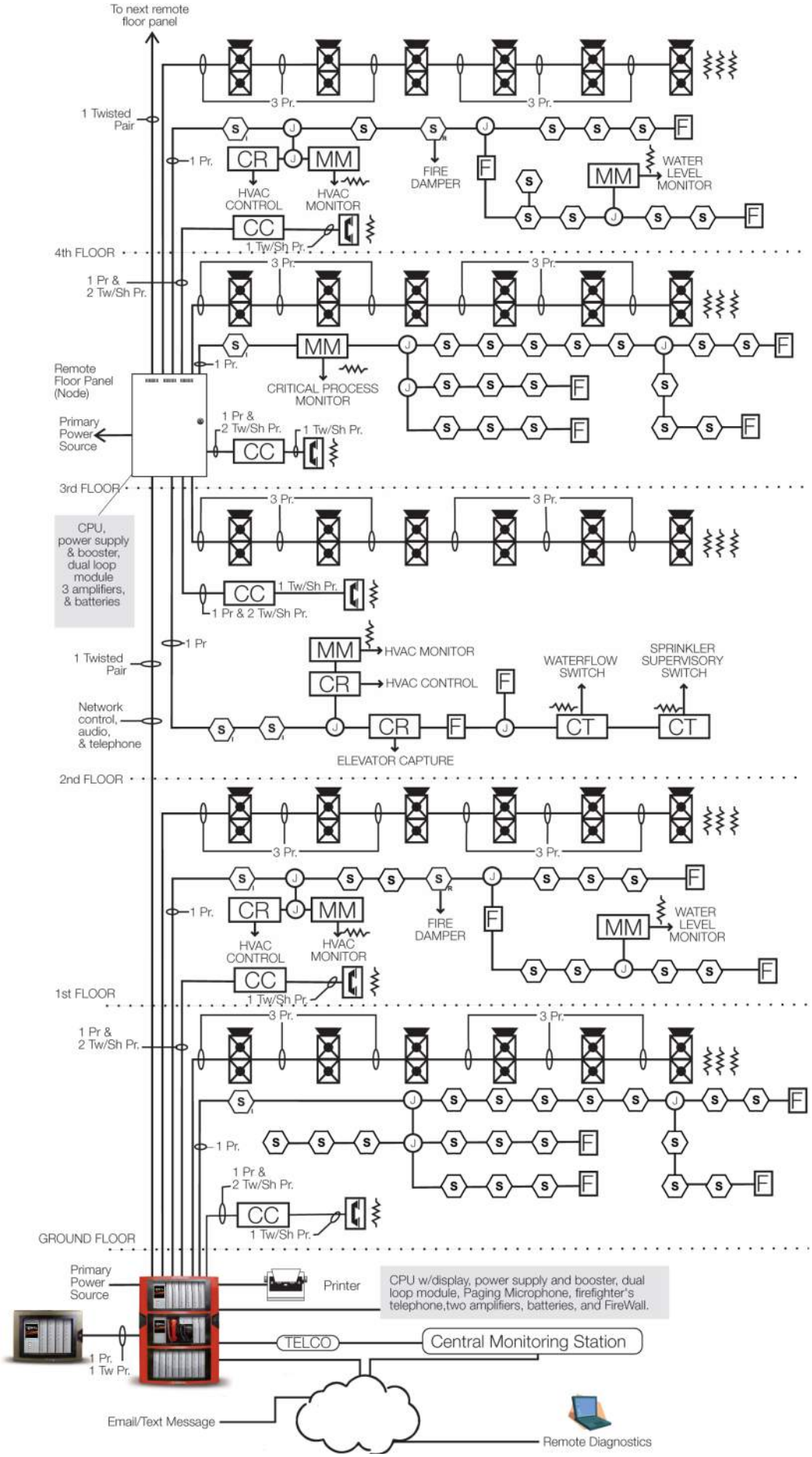

System design benefits greatly from this huge capacity. Minimal cabling requirements take scalability a step further. With EST4 a single copper pair or single fiber supports panel network data, audio data, as well as telephone data. This cuts cable counts by up to 75 per cent. Meanwhile, multiple firefighter's telephones risers are accommodated on the network, which allows them to be deployed at much further distances compared with analog audio transmission methods.

Reduced network cabling not only boosts system efficiency by requiring fewer physical connections, it also saves money by reducing material and labor costs. This means that new EST4 installations benefit from lower cable counts, while retrofits may be able to be upgraded to support audio and telephones without the need to pull additional cable.

For new installations EST4 delivers flexibility. It can use twisted pair wire, Multi-mode fiber, Single Mode fiber, and even CAT5 cable. In fact CAT5 is not restricted to Class N applications. It also meets the stringent requirements of Class A, Class B, and Class X. When using CAT5, distances are not limited to 328 ft. (100 m). EST4's CAT5 support includes a solution that allow up to 3,280 ft. (1 km) of cable length.

Cybersecurity

The security and integrity of the EST4 network is paramount to its ability to maintain systems operations in the face of outside threats. The most vulnerable point of contact for any integrated building system is where it meets the facility owner's existing TCP/IP network. Ironically it is this gateway, which enhances and expands system capability beyond the communications network, that also exposes the system to some of its most critical vulnerabilities.

To combat outside threats, every EST4 panel can deploy proxy firewalls that effectively insulate the internal fire network from external Intranet or internet connections and the malware, ransom ware, and denial-of-services attacks that may be raging beyond. The EST4 proxy firewall uses Advanced Encryption Standard (AES) encryption and secure protocols making it FIPS Pub 197 certified. The FIPS, Federal Information Processing Standards, are the most current and most advanced encryption protocols administered by the National Institute of Standards and Technology (NIST).

EDWARDS recommends the installation of robust commercial firewall between the facilities intra-net and the Internet. To further enhance network security, an optional tamper switch may be installed on EST4 cabinet doors. This alerts the system when equipment enclosures are accessed.

Programming

EST4 is an open book for authorized programmers. Configuration data travels in both directions: it can be downloaded to the panel and uploaded to a laptop. This two-way movement of configuration files allows technicians to upload and backup programming before making changes to the system. By doing so, the tech ensures that trustworthy restore points are available at all times. Also, should the building owner change service companies, up-to-date system programming data can be retrieved with proper authorization, from the panel by the new maintenance personnel in minutes.

Adding to the integrity of panel configuration is an advanced data transfer routine that does not compromise or interrupt normal system operation. This keeps the system fully functional during configuration data exchange – logging events and executing programming during the entire process.

EST4's high-performance Configuration Utility (CU) depicts the system in a graphical tree view, which matches the system's physical layout. This provides a familiar format in which to find programming for specific devices, and also does away with the need for look-up lists when, for example, devices need to be taken out of service because of site specific activities. The programming tool also features a context-sensitive Intellisense rule editor, which checks for syntax and semantic programming errors in real time.

The EST4 Configuration Utility (CU) also makes short work of configuration downloads to the control panel. It does this through a single firmware download for all modules, and a single database download for all node databases.

EST4's on-board USB ports also make it easy to connect with external devices. The USB ports do away with special cables and RS232-to-USB conversion dongles. It allows direct high-speed connection with laptops for the exchange of configuration data at transfer rates of up to 480 Mbps. Printers can be connected to panels or remote annunciators for on-site event and report printouts.

Audio

Nothing informs building occupants better than the spoken word, and EST4's highly intelligible voice audio ensures that those words are heard loud and clear. This high fidelity messaging, across EST4's impressive capacity of 100 channels, provides the flexibility that responders need to get messages out clearly and concisely.

EST4 live paging capabilities ensure that those messages reach the right people at the right time. In addition to standard paging functions (Page to Evacuation, Page to Alert, All Call, and All Call Minus), EST4 introduces Page to Other and Page to Emergency.

Page to Other is a quick way to reach people in stairwells and elevators, while Page to Emergency is for Mass Notification purposes. This added live paging capability allows responders to reach occupants based not only on their proximity to danger, but also based on their potential to move inadvertently towards specific danger points.

EST4 live paging also lets responders select individual paging groups as well as combinations of groups. This allows them to reach people in Alert and Evacuation zones simultaneously without having to page one group, and then page the other.

Reporting System Snapshots

EST4 can generate an abundance of stock reports, and users may also design their own within the configuration utility. Printed reports can be generated locally at any control panel, node, or annunciator. Familiar USB connections allow for quick uploading to laptops or transfer to locally-connected printers. Reports can also be sent from any of these locations to system printers elsewhere on the network.

EST4 allows the selection of report data right down to the device level by means of pre-built templates, custom reports, or even on-the-fly using the CU configuration tool. Report content is information rich, detailed, and meaningful. This meticulous report formatting and organization results in highly understandable system overviews and useful deep dives into underlying system configuration data.

Event History Timelines

While system status reports are invaluable for generating snapshots of important data, EST4's event history can paint a vivid picture of the system over time. A giant 20,000-event repository comprises EST4's history, which could span back as far as the system's commissioning. Half of the history can be set aside exclusively for Alarms, ensuring that records of the most important events are preserved. To support forensic investigations, up to 10,000 events can be locked and preserved so as not to be overwritten.

A large variety of pre-built history reports are available for quick access to vital records filtered by day, week, month or year. Custom reports help pinpoint records by date, time, location, device type and more. Together EST4's large history capacity and flexible history reporting serve to create vital timelines that aid in system maintenance and forensic investigations.

Value-added Forward Migration

Easy migration paths ensure an economical transition from EST3 platforms to EST4's next-generation technology. To start, configuration data is easily transferable from an existing EST3 project to an EST4 upgrade. Hardware is also easy to migrate: all Signature Series devices, modules, and service tools are fully supported by EST4, as are Genesis series notification appliances – no rewiring is required.

Existing network cabling is also reusable for upgrades. EST4 even supports network messaging plus live paging with legacy wiring. In fact, simple twisted pair wiring, previously useable only for panel-to-panel data communications can, with EST4, support panel data, paging, as well as telephone. This means that voice audio capability may be added to a system originally wired only for network panel to panel communications – without pulling any additional wire.

EST4 also employs EST3 power supplies, audio amplifiers, MNEC equipment, CAB Series wallboxes, and most local rail modules. This makes the move to EST4 a cost-effective choice for existing installations, and new projects alike. It is a move that will benefit system efficiency and scalability now and for many years into the future.

Agency Approvals

UL864 10th edition - UOJZ, UUKL, SYZV, UOQY

UL2017 2nd edition - FSZI

UL2572 2nd edition - PGWM

ULC-S527-11 3rd edition - UOJZ, UULK7, SYXV7

ULC-S576-14 1st edition - PGWM7

ULCS-S559-13 2nd edition - DYR7

LIFE SAFETY & INCIDENT MANAGEMENT

Contact us...

Email: *edwards.fire@fs.utc.com*
Web: *edwards-fire.com*

1016 Corporate Park Drive
Mebane, NC 27302

EDWARDS is a registered mark in the United States and other countries.

© 2019 United Technologies Corporation. All rights reserved.

LIFE SAFETY & INCIDENT MANAGEMENT

EST4 LCD Display Module

4-LCD Series

NYC FIRE DEPT. COA # 2022-TMCOAP-008086-RENL

EN54

Overview

EST4's LCD large color touch-screen display is the window into system operation and maintenance functions. It is large enough to support a graphical tree view of the system. The tree closely matches the system's physical layout, so there's no need for look-up tables to find specific devices. This is invaluable to technicians and building service personnel who can pinpoint the location of an off-normal device with a glance at the on-screen tree.

The EST4 LCD screen will display eight events without scrolling. In addition to touch-screen capability, the display assembly includes four dedicated easy-access rubber buttons for main control functions.

On the display, device events automatically sort into classification queues with event counts for easy identification and response. When new events are present that have yet to be reviewed, each queue is highlighted with an visual marking.

Standard Features

- **Large Easy-to-Read Display Area**
  Displays eight events, 768 10-point characters.
- **Full Color for Detail-rich User Experience**
  262,144 colors with support for custom wallpaper.
- **Displays System Tree View on One Screen Page**
  Quick drill-downs to find devices, no look-up tables required.
- **Context-sensitive User Interface**
  One sign-in determines user privileges and available devices.
- **Color-coded Event Queue, History Log, Status Report**
  At-a-glance identification of priorities.
- **User Configurable Image Display**
  Displays a customized image that appears on the LCD's home screen when no active events are present.

Application

Ensuring information clarity, the 4-LCD uses a 262,144 color touch screen LCD display. The display's design layout provides not only emergency information in a useful format, but also the ability to view other system operations including reports. A single button press will route the report to a configured network printer for hardcopy record of the report.

The 4-LCD always displays the last highest priority event. Further message flexibility is provided with EST4's message routing ability. Messages from a panel can display at every LCD on the network, or messages can route to specific LCDs only. Routing can be initiated at a specific time/shift change. There is no need to have messages display in areas that are not affected by an event.

The 4-LCD can display system messages in any two of the EST4-supported languages and dialects. Choice of language is selected by the marketplace setting in EST4, any two of the available languages for a marketplace can be displayed as the primary language, and a second language can be displayed simply by selecting the language button on the LCD display. The display supports a set of Unicode symbols for example: ☢ ☣ ⚰ ☠ . These symbols can provide a heightened visual element to a messages importance.

Assembly and Installation

The 4-LCD display mounts onto the inner door frame of EST4 control panels. The inner door also acts as a deadfront, separating users from field wiring located behind it.

The 4-3LCD display mounts into EST3 enclosures that do not contain audio control components. This allows reuse of EST3 user interface layers in these applications. The 4-3LCD mounts onto the top of the 4-CPU in EST3 retrofit applications, providing all the benefits of the 4-LCD, while matching closely the EST3 look.

4-LCD Mounting

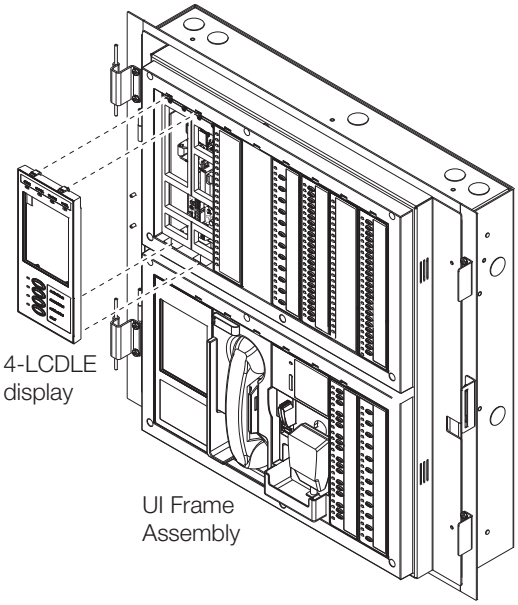

4-3LCD Mounting

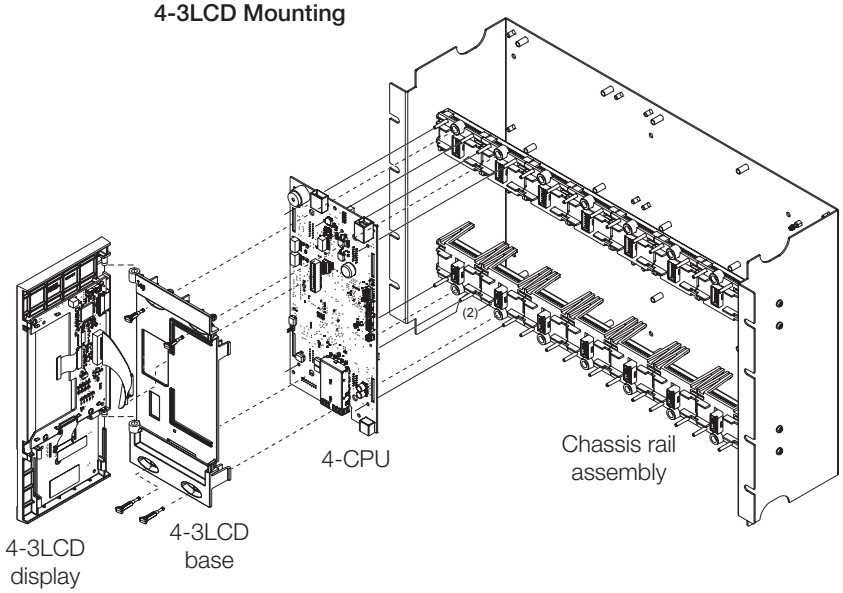

Engineering Specification

The system shall provide a user interface that displays system events on a color touch screen display in a text format. The display must be capable of supporting a minimum of two languages including but not limited to English, Spanish, Portuguese or French. The display design shall be simplified for emergency users so that main common controls are provided as switches/buttons that provide positive feedback of operation, common control buttons shall not be part of the touch screen display area. The Common Control Switches and LEDs provided through tactile buttons with indicators shall be; Reset switch and LED, Alarm Silence switch and LED, Panel Silence switch and LED, Acknowledge switch and LED. In addition the following LEDs shall be provided as discrete indicators, Alarm Indicator, CPU Fail Indicator, Trouble Indicator and Power Indicator. It must be possible to add additional common controls as required through the use of modular display units. The user interface must provide a color touchscreen LCD display with minimum resolution of VGA 640 x 480. The display shall provide a minimum of seven events displayed concurrently and support >200,000 colors. The system shall be capable of displaying custom images on the panel's LCD screen when no active events are present. Hands free operations shall be provided for viewing the first eight highest priority events. Events of different priorities shall be automatically placed in easy to access queues. It shall be possible to view specific event types separately. Having to scroll through a mixed list of event types is not acceptable. The total number of active events by type must be displayed. Visual indication must be provided of any event type which has not been acknowledged or viewed. It must be possible to customize the designation of all user interface LEDs and Switches for local language requirements. The color LCD display must support scripts & ideograph style font types. It shall be possible to have a custom message for each device in addition to zone messages. Custom device messages must support a minimum of 42 characters each. Instructional text messages support a maximum of 2,000 characters each.

Control and Display Functions

The EST4 LCD display simplifies the user interface. Up front and at the top of the display are four easy-to-read and understand status lights.

1 Alarm LED

The Alarm LED serves as a common alarm event indicator. The LED illuminates when there is am Alarm type event on the system. The specific Alarm event displays in its queue on the LCD where a count of alarm events is displayed along with a visual indicator if there are new events that have not been viewed.

2 Trouble LED

This LED serves as a common trouble event indicator. The LED illuminates when there are events in the trouble event queue located on the LCD display. The trouble event queue provides a count of trouble events and highlights if there are new events that have not been viewed (local systems operation) or acknowledged (proprietary systems operation).

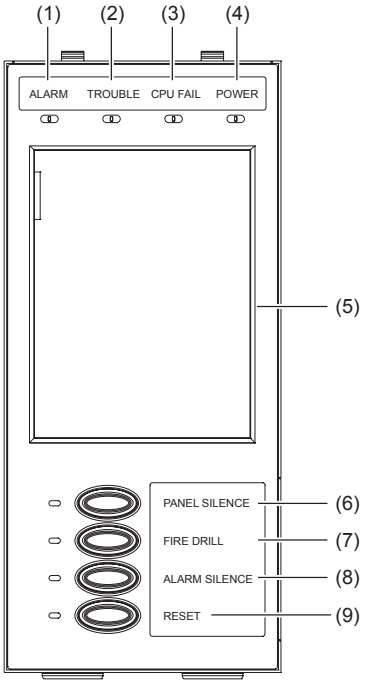

3 CPU Fail LED

The LED indicates that the CPU has detected a processor failure. Processor failures must be reset manually using the Reset button.

4 Power LED

The LED indicates the power status. The LED operation is selectable in the panel configuration utility and supports local power display requirements including: On if there is primary or standby power present; On when primary power present, off during primary power loss; On when the panel has primary power and standby power, off if either standby or primary power are absent.

5 LCD screen

The heart of the 4-LCD is the color Liquid Crystal Display located in the center of the module. In the System Normal condition the date and time plus system wallpaper image are displayed on the LCD.

Control Buttons

Four easy to find rubber buttons are located at the bottom of the display. These provide simple-to-understand common control functions. The switch design gives tactile feedback when operated, but EST4 offers additional user feedback by also providing a visual indication of switch activation through the associated LED. When a switch is activated the LED beside the switch will illuminate in a contrasting color. This gives a visual indication that the system has seen the switch push. The LED will change to its programmed color when the switch command has been executed.

The versatility of EST4 allows system designers to define the features affecting particular areas of a building. These are known as Notification Control Areas (NCAs), which are defined areas of an installation. A network may have several NCAs. This feature is very useful when configuring systems with multiple buildings on one network. For example, operating the Reset function in one building may have an adverse effect in other buildings. As a solution to this, audio paging may be programmed to affect the defined NCA and no other NCAs. This means that with EST4, having operational differences between buildings on the same network is not a problem. This feature can save wiring and reduce inter panel overhead.

6 Panel Silence button and LED

The factory default for this programmable button and LED indicator is Panel Silence. Pressing Panel Silence turns off the system's internal audible signal. The switch indicator has two statuses: white when the switch is pressed, yellow on when panel silence is active.

7 Fire Drill button and LED

The factory default for this programmable button and LED indicator is Fire Drill. Pressing Fire Drill turns on the drill LED and all signals sound evacuation. Drill does not activate city tie connections. Auxiliary relays will not activate unless programmed to do so with drill.

8 Alarm Silence button and LED

The factory default for this programmable button and LED indicator is Alarm Silence. Pressing Alarm Silence turns off all Notification Appliance Circuits defined as audible. The switch indicator has two statuses: white when the switch is pressed, yellow when silence is active via the Alarm Silence switch or via alarm silence software timers.

9 Reset button and LED

The factory default for this programmable button and LED indicator is Reset. Pressing Reset starts the system's reset operation. The switch indicator has four statuses: white when the switch is pressed; fast flashing green during the smoke power down phase of reset; slow flashing green during the restart phase; and, on steady green during the restoral phase. The Reset LED is off when the system is not in the reset process.

LCD screen

a. Date and Time: Date format is selectable in the 4-CU.

b. Event Indicators: The event indicators provide a quick view of the event types active in the system. It indicates a count of the number of events in each group, and highlights new events that have not been viewed.

c. List Bar: The List Bar shows the event queues with active points. By simply selecting a queue the events for that queue are displayed in a list on the screen. In this example, the alarm queue is displayed.

d. Action Bar: The Action Bar allows the selection of specific actions that can be initiated via the LCD. Among those actions are gaining access to higher function levels (with proper accreditation), changing to the graphical Tree View, or accessing information such as panel firmware versions, CU and hardware configurations, licensing and contact information.

LIFE SAFETY & INCIDENT MANAGEMENT

Contact us

Phone: 800-655-4497 (Option 4)
Email: edwards.fire@carrier.com
Website: edwardsfiresafety.com

8985 Town Center Pkwy
Bradenton, FL 34202

© 2023 Carrier
All rights reserved.

Technical Specifications

	4-LCD	4-3 LCD
Rail Spaces	Two inner door spaces	Two user interfaces spaces.
Mounting	Mounts on inner door	Mounts on UI layer above 4-CPU
Current		
Standby	50 mA at 24 VDC	
Alarm/active	110 mA at 24 VDC	
Display	18 bit color. 640 x 480 pixels, resistive touch screen	
System status indicators		
ALARM	Red indicator	
TROUBLE	Yellow indicator	
CPU FAIL	Yellow indicator	
POWER ON	Green indicator	
Common controls and indicators [1]		
PANEL SILENCE button	Yellow indicator integrated with the Panel Silence button	
FIRE DRILL button	Yellow indicator integrated with the Fire Drill button	
ALARM SILENCE button	Yellow indicator integrated with the Alarm Silence button	
RESET button	Green indicator integrated with the Reset button	
Operating environment Temperature	32 to 120°F (0 to 49°C)	
Relative humidity	0 to 93% noncondensing	
Custom Background Image	Size: 480 x 640 pixels or greater with as aspect ratio of 3:4 (e.g., 600 x 800, 768 x 1024, or 960 x 1280) Resolution: 141 dpi or greater Color depth: 18-bit color or greater (24-bit is RGB; 32-bit is CMYK) Format: JPG, JPEG, or PNG	

[1] Factory default for the common controls and indicators are listed here. These common controls can be reprogrammed using the Configuration Utility (4-CU). The associated indicators can also be reprogrammed as red, green, yellow, blue or white colors.

Ordering Information

Model # (SKU)	Description	Shipping Weight
4-LCD	Main color touchscreen LCD display	1.25lb (0.57kg)
4-LCDANN	4-LCD w/ cable for Annunciator enclosure 4-4ANN, 4-6ANN mounting	1.9lb (0.85kg)
4-LCDLE	4-LCD w/ cable for 3-CAB5B, 7B, 14B, 21B, 4-8ANN, 16ANN and 24ANN mounting	1.9lb (0.85kg)
4-3LCD	LCD display for use in EST3 panels, allows reuse of EST3 UI layer in retrofit applications. The 4-3LCD can be mounted in remote closet cabinets where an LCD display is needed. The display mounts on the 4-CPU module.	1.5lb (0.66kg)
4-3LCD-E	LCD display for use in EST3 panels, allows reuse of EST3 UI layer in retrofit applications. The 4-3LCD can be mounted in remote closet cabinets where an LCD display is needed. The display mounts on the 4-CPU module. EN54 compliant model.	1.5lb (0.66kg)
Accessories and related equipment		
4-CABL0502	Service replacement cable, 4-LCD to 4-CPU flex interconnect cable for CAB5, 7, 14, 21.	0.38lb (0.17kg)
4-CABL0504	Service replacement cable 4-LCD to 4-ANNCPU cable for use in 4-2ANN, 4ANN, 6ANN annunciator configuration.	0.37lb (0.17kg)
4-CABL0541	Service replacement cable 4-3LCD to 4-CPU cable for use in 3-CAB5B, 7B, 14B, 21B, RCC series.	0.1lb (0.04kg)
4-CABL0505	Cable, Door Rail to Rail, 13 Inch for 4-CAB16D(R), 4-CAB24D(R), or 4-CAB24D(R)L.	0.5lb (0.23kg)
4-CABL0507	Cable, Door Rail to Rail, 11.3 Inch for 4-CAB8D(R).	0.5lb (0.23kg)
4-CABL0542	Cable, for use with 4-CPU or 4-ANNCPU where no LCD is installed on Inner Door.	0.6lb (0.26kg)
4-LKIT-ES	Language Kit, 4-LKIT-ES, Panel door, Spanish, Edwards	25lbs (.11)
4-LKIT-FR	Language Kit, 4-LKIT-FR, Panel door, French, Edwards	25lbs (.11)
4-LKIT-PT	Language Kit, 4-LKIT-ES, Panel door, Portuguese, Edwards	25lbs (.11)
4-LKIT-ZH	Language Kit, 4-LKIT-ES, Panel door, Chinese, Edwards	25lbs (.11)

Note 1: Unless otherwise specified, all SKUs may be used in EN54/UL/ULC applications.

EDWARDS

LIFE SAFETY & INCIDENT MANAGEMENT

EST4 Central Processing Unit

4-CPU

FM APPROVED | NYC FIRE DEPT. COA # 2022-TMCOAP-008086-RENL | UL | ULC | CE | EN54

Overview

EST4's Central Processing Unit, the 4-CPU, is a control panel card that manages data generated by local modules and acts as a nexus for system-wide network communication. It accomplishes this by pulling data from local rail modules in real time and facilitating both intra-module data exchange, and inter-node communications with remarkable speed and efficiency.

The 4-CPU is, in essence, the gatekeeper for events reported to modules from field devices; it is the controller of audio data; the caretaker of event logs; the guardian of security; and, the link to central monitoring facilities. The EST4 Emergency Communications Platform is built upon system nodes, and the 4-CPU is controller of the nodes.

The hardware that supports 4-CPU operation is robust enough to handle the complex and critical tasks it is assigned. The 4-CPU's eight gigabytes of on-board memory storage holds nearly two hours of pre-recorded audio messaging, as well as an expansive project database. It also holds a large on-board history – large enough to handle more than 10,000 alarm events – and room to store up to 10,000 locked or frozen events held for investigative purposes.

Thanks to its self-configuring network, EST4 nodes easily deploy and configure without intervention by network administration personnel. They adapt to a wide range of network configurations, including rings, stars, redundant segment, and full mesh topology. The 4-CPU even allows changes in the physical layer from copper to fiber, and employs hot-swappable network connections. All this improves network reliability and saves money at installation time and throughout the equipment's life cycle.

Standard Features

- **20,000 event history**
  Large history ensures system events are captured plus additional 10,000 event EST4 *History Freeze* function.
- **SFP style Network Communications Media Options**
  Supported media types include, twisted pair, CAT5, Single and Multimode Fiber in any combination.
- **Up to 750 Minutes of Stored Voice Messages**
  Memory is standard on-board. No need for additional modules.
- **USB V2.0 Type A Host Port**
  High speed connection for printers and hubs.
- **USB V2.0 Type B Device Port**
  High speed connection supports laptops.
- **Integrated Audio Synchronization**
  The 4-CPU synchronizes audio signals across the network, ensuring clear messaging over long distances.
- **Optional Form C Alarm, Supervisory, Trouble Contacts**
  Space for the 4-COMREL Common Relay Module. Relays are rated 30Vdc at 1A. Supports wire sizes from 18 to 12AWG.
- **Optional USB Hub**
  Expands the USB capability of the CPU to meet application needs, comes with RS-232 port.
- **Optional Audio Support**
  Space provided for the 4-AUDTELS Audio I/O and Telephone Riser source module.
- **Simple Plug-in Design**
  Easy installation, no special tools required, CPU simply plugs onto the panel rail.

Application

The 4-CPU makes EST4 an extremely powerful and flexible system. Systems may comprise a single standalone node, while larger installations comprise an integrated network. These may include many nodes communicating via IPv6 over several different types of fire-listed wiring, including fiber optics, twisted pair, and CAT5 cabling. Regardless of the system size, a single 4-CPU node controls up to 19 additional local rail modules.

The 4-CPU controls all local panel responses to automatic, user initiated, or network-reported events. As a network node, it is an equal among peers: there is no master on the network. This gives exceptional response times of less than three seconds.

Intra-module Communications

Upon power-up the processor automatically learns all local rail module attributes and locations; it negotiates with other life safety CPUs at nodes on the IPv6 network; and, it automatically enables the full support for cyber security protocols tested to meet FIPS Publication 197. This security applies optionally to a single panel, or throughout the entire EST4 network. The 4-CPU automatically configures the EST4 network thanks to integrated plug-and-play setup and auto address. No IT network administrator is required.

The EST4, 4-CPU on-board USB ports make inner panel wiring simple. The majority of interconnections are made with standard USB 3.0 cables supplied as standard with most option modules. The USB interconnect runs at speeds of up to 480 Mbps, ensuring fast system data transmission.

This fast data transmission is used, not only for inner panel communication, but also for external communications through a 4-FWAL to the FireWorks graphical user interface, printers, and other systems needing integration to the life safety system.

Inter-Panel Networking

Each 4-CPU provides two SFP slots supporting hot-swappable modules that determine the media type in use at the panel. The 4-CPU also supports the 4-AUDTELS Audio Telephone Riser Module. This enables audio, local microphone connection, and firefighter telephone connection. The 4-CPU supports connection of optional common relays, 1 Vrms audio in- and out-terminals, and firephone riser connection — all of which provide removable field wiring terminal blocks.

For enhanced survivability, SFP network controller modules are hot swappable and mount to the slots on the 4-CPU. The network connection supports panel-to-panel data, voice audio, and firefighters telephone all on the same cabling – no separate interconnections needed. Should the application call for it, cabling can be installed that allows all inter-panel network data – including panel data, voice audio, and firefighters telephone – to be transmitted on a single twisted pair or single fiber optic fiber. This helps speed setup time and cuts installation costs.

Network physical interconnection options offer a range of solutions from twisted pair running at 2 Mbps and supporting distances of up to 5,000 ft. (1.5 km) between any two panels. When running at 0.2 Mbps, even longer distances are possible – up to 50,000 ft. (15 km).

Single-mode, multimode, and even CAT5 cabling options are possible with EST4. The 4-CPU also meets redundancy and survivability requirements of many cabling needs, including Class A, Class B, Class X, and Class N. CAT5 installations are not limited to Class N wiring style: the network can be engineered to meet Class A, Class B, and Class X configuration when the project requires distances of up to 3,280 ft.

Network messages received by the network communications controllers are re-transmitted to the next network panel. This re-transmission maximizes the wire run lengths between panels.

Should the related central processor stop operating to specifications, fail-safe protocols built into EST4 network controller cards connect the data input directly to the output ports. This operation provides a back-to-back passthrough mode for most media type to media type and maintains network connectivity, not only during a catastrophic failure of a single panel, but also in the event that the panel is powered down for servicing. This keeps the fire network up and running at all times. For greater serviceability, any powered-down panel maintains its real time clock for up to 30 minutes — even if the panel has all power sources removed, including main and standby sources.

Installation

The 4-CPU mounts in the first two local rail spaces of the upper 3-CHAS7 module chassis. Options for the 4-CPU include a color LCD display and user interface, a wide selection of small form-factor pluggable (SFP) network controller modules, USB internal panel connections, common relays, audio, and fire fighters telephone communication cards.

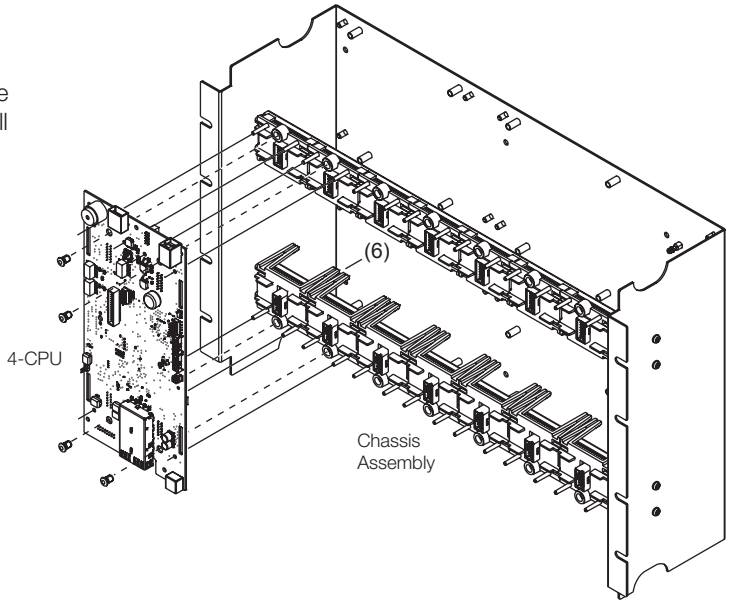

Engineering Specification

It must be possible to support a single standalone node or multiple nodes communicating on a TCP/IP, IPv6 network that supports mesh configuration. The network shall support physical media connections via fiber, twisted pair or CAT 5 in any combination. The Network shall support data transmission of panel-to-panel data, voice audio and firefighter telephone data on a single twisted pair or single fiber optic cable. The Network shall be configured as Class A or Class B or Class X configuration. Networks restricted to Class N wiring shall not be acceptable. Network shall support a back-to-back pass-through mode that shall maintain network connectivity on power down or catastrophic failure of a single panel. The network shall support twisted pair links to 5,000 ft., CAT 5 links to 3,280 ft., and fiber links to 130,994 ft.

The network shall support hard copy report printing to a system printer connected to any panel in the network, systems that require reports be run from the panel that has a printer connection shall not be considered equal. The systems LCD display shall provide color graphics display of maintenance and sensitivity reports.

The system shall support multiple languages/dialects and Unicode character set.

The Control panel and network shall not use easily removable devices, such as SD cards or external storage devices for storage of system critical information including programming and project files. Communications outside the life safety network shall meet the requirements of FIPS Publication 197.

Security-relevant information, such as: failed login attempts, failed unauthorized accesses, and user modification shall be logged to panel history. Unsuccessful authentication attempts shall not leak information regarding the presence of the system or users. Credentials shall only be transmitted that are encrypted. The system shall provide for multiple users, roles shall be provided for users to ensure proper access by user for the role they perform on the system. All passwords shall use a cypher algorithm for security purposes to protect any sensitive information. No passwords shall be visible as plain text within the database or entire system.

Sensitive information shall not be logged to history or displayed on service tools (e.g. passwords, PINs etc.).

The system shall support configuration of multiple IP connections to external services including, central stations, email servers, web interfaces, reports, and third party integration.

Email messages shall support multiple languages in native characters that match the languages supported in the panel. Email messages shall support symbolic and color alarm event highlighting.

The system shall support logging of up to 20,000 chronological events using FIFO. Is shall be possible to freeze or store the most recent 10,000 events separately from the FIFO log.

It shall be supported to download all applications and firmware from the configuration computer at a single location on the fire network. The system shall support upload of a project file from any location on the fire network.

Technical Specifications

Current Standby Alarm	230 mA at 24 VDC
Common relays	See the 4-COMREL Common Relay Module Installation Sheet (P/N 3102284- EN)
Universal Serial Bus (USB) ports	1 USB 3.0, Type A – female port 1 USB 3.0, Type B – female port
USB cables[1]	4-CABLUSBSM – 3.0 USB, 29.5 in.(0.75 m), included. 4-CABLUSBLG – 3.0 USB, 59.0 in.(1.5 m), sold separately.
SFP modules	Refer to the SFP catalog sheet E85014-0008 for a list of compatible SFP modules.
Agency Approvals	UL, ULC, FM, CSFM, EN54, CE, NYC Fire Dept. [2]
Wire size TB1 network backup power connection	12 to 18 AWG (2.5 to 1.0 mm²)
Ground fault impedance	5 kΩ or less
Operating environment Temperature Relative humidity	32 to 120°F (0 to 49°C) 0 to 93% noncondensing

[1] Only use listed USB cables. Retail USB cabling is not sufficient for this application.
[2] CE compliant product add suffix -E to model (e.g. 4-CPU-E)

Ordering Information

Model # (SKU)	Description	Shipping Weight
4-CPU	Central Processor Module	0.95lb (0.43kg)
4-CPU-E	Central Processor Module, EN54 compliant model	0.95lb (0.43kg)
4-AUDTELS-E	Audio and Telephone Interface/Riser Source Module, EN54 compliant model	0.95lb (0.43kg)
Accessories and related equipment		
4-AUDTELS	Audio and Telephone Interface/Riser Source Module	0.65lb (0.29kg)
4-COMREL	Common Relay Module	0.25lb (0.11kg)
4-NET-MM	SFP Network Controller, Multimode, Dual-Fiber, 100Base-FX 1310nm	0.248lb (0.112kg)
4-NET-SM	SFP Network Controller, Single-Mode, Dual-Fiber, 100Base-LX10 1310nm	0.248lb (0.112kg)
4-NET-SMH	SFP Network Controller, Single-Mode, high power output, Dual-Fiber, 100Base-LX40 1310nm	0.248lb (0.112kg)
4-NET-TP	SFP Network Controller, 2Mbps Shared TX/RX, Twisted Pair	0.2lb (0.091kg)
4-NET-TP-HC (Not approved for EN54 applications)	SFP Network Controller, 0.3Mbps Shared TX/RX, High Capacitance Twisted Pair	0.2lb (0.091kg)
4-NET-CAT	SFP Network Controller, CAT5 UTP Copper, 100Base-TX	0.2lb (0.091kg)
4-NET-SMD	SFP Network Controller, Single-Mode, Single-Fiber, Downlink, 100Base-BX10-D 1550nm/1310nm Tx/Rx	0.248lb (0.112kg)
4-NET-SMU	SFP Network Controller, Single-Mode, Single-Fiber, Uplink, 100Base-BX10-U 1310nm/1550nm Tx/Rx,	0.248lb (0.112kg)
4-USBHUB	USB Multiport Hub Module	0.85lb (0.39kg)
4-CABLUSBLG	Cable, USB 3.0 A-B, Male, Long	0.31lb (0.14kg)
4-CABL0542	Cable interconnects the 4-CPU to the inner door rail when no 4-LCD display is installed in the cabinet.	0.58lb (0.26kg)

Note 1: Unless otherwise specified, all SKUs may be used in EN54/UL/ULC applications.

LIFE SAFETY & INCIDENT MANAGEMENT

Contact us

Phone: 800-655-4497 (Option 4)
Email: edwards.fire@carrier.com
Website: edwardsfiresafety.com

8985 Town Center Pkwy
Bradenton, FL 34202

© 2023 Carrier
All rights reserved.

EDWARDS

LIFE SAFETY & INCIDENT MANAGEMENT

Signature Driver Controller Modules

3-SSDC1, 3-SDDC1, 3-SDC1

Approvals

EST4	EST3
UL, ULC S3000	UL, ULC S3000
7165-1657: 0186/0306	7165-1657: 0186/0306
NYC FIRE DEPT. COA # 6314	FDNY APPROVED
FM APPROVED	FM APPROVED
	CE

EN 54-2: 1997 + A1: 2006
EN 54-4: 1997 + A1: 2002 + A2: 2006
EN 54-16: 2008

Overview

The 3-SSDC1 and 3-SDDC1 Signature Driver Controller modules provide an intelligent interface between the system's main CPU module and Signature Series devices. Each module contains its own microprocessor used to coordinate, process and interpret information received from and sent to Signature devices. Power and communications is received directly from the control panel rail assembly. The 3-SSDC1 Single Signature Driver Controller module supports one Signature Data circuit, while the 3-SDDC1 Signature Dual Driver Controller module supports two Signature circuits. Both modules occupy one rail space in the fire alarm control cabinet and provide removable field wiring terminals to aid installation.

Innovative design gives the 3-SSDC1/3-SDDC1 and Signature devices truly "distributed intelligence". Signature detectors and modules have their own on-board microprocessor communicating with the loop controller in a fully digital communication format. This increases the accuracy of the information coming to and from the loop controller by reducing the effects of capacitance and noise.

With decentralized intelligence much of the decision making moves from the loop controller to the devices. Advanced fire detection algorithms processed within the Signature devices effectively end unwanted alarms. Environmental compensation and multiple sensing element decision making operations are resident in the devices. Intelligent devices allow the Signature Controllers to execute communication and system functions with greater speed and low baud rates, increasing the accuracy of information transmitted between the loop controller and devices.

Standard Features

- One or two circuit versions
- Dedicated microprocessor control
- Full digital communication
- Specialized communication protocol
  – Less sensitive to cable characteristics
  – Utilize existing wiring in most applications
- Loop alarm in under 750 milliseconds
- Device location supervision
  – Unexpected additional device addresses
  – Missing device addresses
  – Switched device locations
  – Programmed device parameters
- Automatic nonvolatile as-built mapping
  – Stores "actual" and "expected" device data
  – Stores physical connection sequence including "T" taps
- Automatic day/night sensitivity
- Supports up to 250 intelligent Signature detectors and 250 Intelligent Signature Modules
- Up to five 3-SDDC1s per node
  – Total of 10 Signature circuits
- Removable field wiring terminal blocks
- Multiple survival modes — stand alone
- Fully backward compatible with 3-SSDC and 3-SDDC

Application

Up to 125 detectors and 125 modules are supported over a single pair of wires by the 3-SDC1 Signature Cards that plug into the Signature controller modules. Loop distances over 11,000 feet (3300m) are possible. Class B wiring, Class A and Class X wiring are supported.

The 3-SSDC1 and 3-SDDC1 use advanced communication formats that provide exceptional response. Using a “BROADCAST POLL” the loop controller checks the entire device circuit for any changes of state. Should one or more devices report a change the 3-SSDC1/3-SDDC1 uses “DIRECT ADDRESS SEARCH” to find reporting device(s). Devices that have entered the alarm state or become active are located nearly instantaneously.

The unique use of “BROADCAST POLLING” combined with “DIRECT ADDRESS SEARCH” ensures that only new information is transmitted allowing a reduced baud rate with fast response time. The low baud rate is ideal for retrofit applications since in most applications existing wiring can be used.

To enhance survivability of the system the 3-SSDC1/3-SDDC1 supports a standalone mode for Signature devices. Two catastrophic failure modes are supported. If the main panel CPU fails, the loop controller will continue to poll its devices. If an alarm is detected it will be sent on the local rail communication bus and received by other local rail modules. A common alarm condition throughout the panel will result. If the local rail module (3-SSDC1/3-SDDC1) fails, and a device (smoke or module) detects an alarm, specialized circuitry will make the node aware of the alarm condition. The panel’s main CPU will communicate the alarm condition to the rest of the network. Having multiple redundant modes is paramount in a life safety system.

Every time the 3-SSDC1/3-SDDC1 communicates with a detector a green LED on the detector flashes. Normal green LED activity is not disturbing to building occupants, but can be quickly spotted by a maintenance technician. A red LED on the detector turns on only in the alarm condition.

The 3-SSDC1/3-SDDC1 also supervises the device wiring, physical location of each device and the programmed device characteristics. This EDWARDS/Signature Series unique characteristic is accomplished by “MAPPING” the Signature circuit and committing the map to memory. Upon power up the loop controller will scan device serial numbers and map their physical location sequence on the loop, including “T” taps. After mapping is complete the controller automatically addresses each detector and module through downloading over the loop. There are no switches or dials to set. Each device is assigned a unique soft address generated by the site specific program.

The 3-SSDC1/3-SDDC1 then compares the “Actual” physical device data to the “Expected” site specific program data. If any correlations are different, the loop controller issues a trouble to the CPU identifying the devices which do not match and posting a map fault. A graphical map of the loop can be uploaded depicting each device’s location on the loop, including branches (T-Taps) and all of the physical attributes associated with the device. This diagnostic information is unparalleled in the fire detection industry and vital for keeping accurate records on how the system was installed.

During installation a common problem with analog/ addressable systems is locating ground faults. The 3-SSDC1 and 3-SDDC1 controllers have the ability to locate ground faults by specific module, speeding up the troubleshooting process. Another significant advantage of the 3-SSDC1/3-SDDC1 controllers during commissioning is electronic addressing and mapping. This eliminates duplicate addresses, which are also very difficult for most systems to locate.

During maintenance, should groups of detector heads be removed for service and returned into the wrong smoke detector base (location), the 3-SSDC1/3-SDDC1 will automatically detect the problem. If the attributes of the switched devices are the same, the system will automatically download the correct soft addresses and algorithms to the devices (maintaining location supervision).

If the attributes are not the same the 3-SSDC1/3-SDDC1 will send a map fault indication to to the system’s main CPU and post a trouble indicating the specific devices in fault.

The 3-SSDC1/3-SDDC1 also monitors the Signature Series devices for maintenance and trouble conditions. Each smoke detector contains intelligence to adjust with environmental changes. This expands the amount of time required between cleaning while maintaining a constant alarm threshold. As the detector begins to exhaust the environmental compensation, and reaches the 80% level, the 3-SSDC1/3-SDDC1 will indicate a maintenance alert or dirty condition to the system’s main CPU and indicate the specific device requiring cleaning. If cleaning is not performed the detector will continue to operate until all of its environmental compensation is utilized. At this point the 3-SSDC1/3-SDDC1 sends a dirty trouble indication to the panel’s main CPU and posts a trouble condition. If maintenance is still not performed the Signature detector will automatically remove itself from service once the programmed threshold window has been breached (preventing a false alarm).

When a detector includes carbon monoxide (CO) detection, the detector monitors its CO life remaining for the CO sensor element and provides this information automatically to the panel. For maintenance of the system the CO life remaining is also available by simply running a maintenance report at the panel or through the FireWorks graphical interface. A unique CO maintenance signal is automatically generated by the panel when there is 8% (several months) of CO life remaining. Should the CO sensor not be replaced after the maintenance signal is reported, an “End of Life” trouble automatically posts on the panel when the CO sensor detection capability is exhausted.

Remote test capability permits devices to be put in alarm, pre-alarm, supervisory, monitor, or security alarm, or trouble from the panel menu or controls. This facilitates testing of smoke and heat detectors as well as monitor and security devices. Fast test is also provided for CO detectors allowing these devices to be tested quickly in the field.

The 3-SSDC1 and 3-SDDC1 local rail modules modules are fully backwards compatible with the 3-SSDC and 3-SDDC local rail modules.

Typical Wiring

3-SSDC1, 3-DSDC1, and 3-SDDC1 Class B wiring

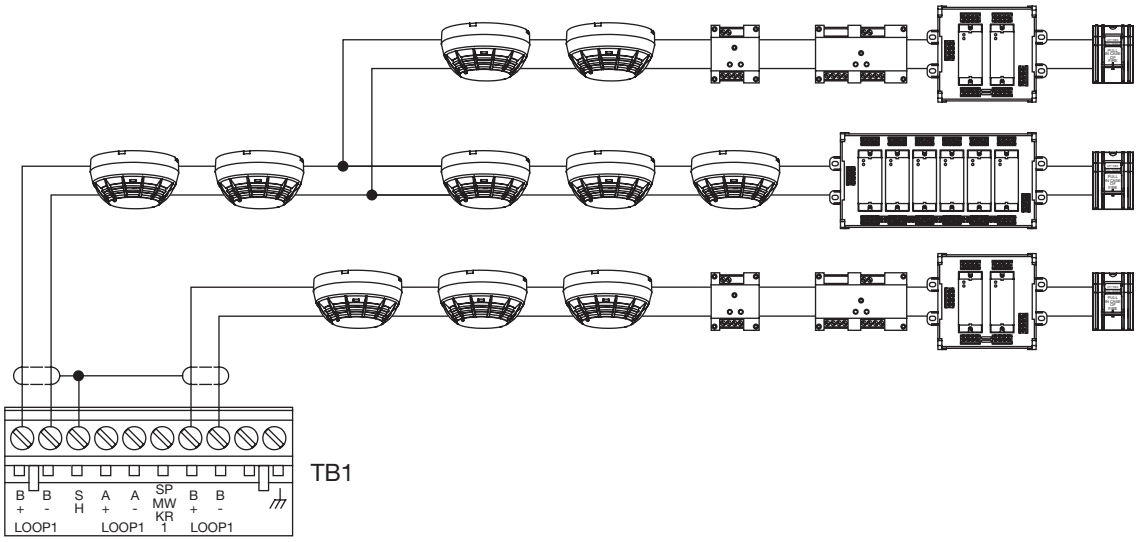

3-SSDC1, 3-DSDC1, and 3-SDDC1 Class A and Class X wiring

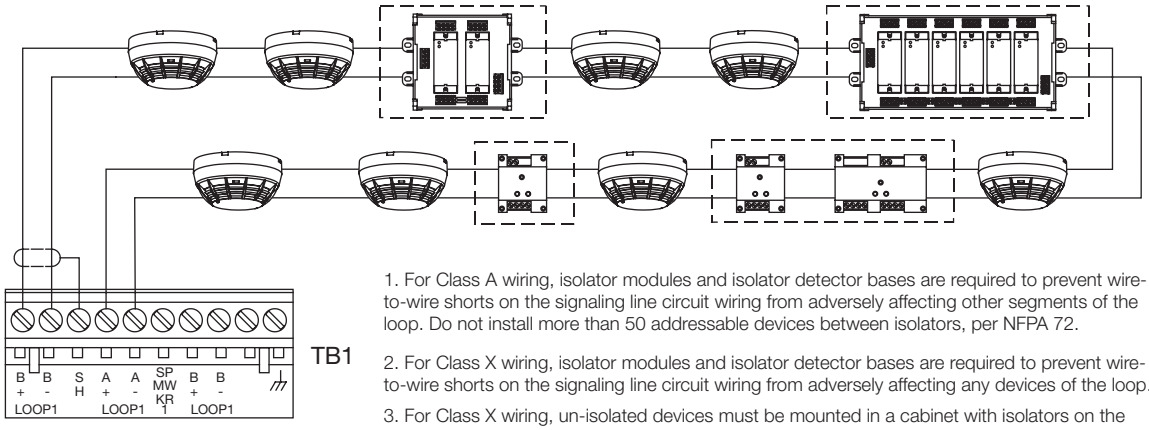

1. For Class A wiring, isolator modules and isolator detector bases are required to prevent wire-to-wire shorts on the signaling line circuit wiring from adversely affecting other segments of the loop. Do not install more than 50 addressable devices between isolators, per NFPA 72.

2. For Class X wiring, isolator modules and isolator detector bases are required to prevent wire-to-wire shorts on the signaling line circuit wiring from adversely affecting any devices of the loop.

3. For Class X wiring, un-isolated devices must be mounted in a cabinet with isolators on the incoming and outgoing wiring.

Engineering Specification

The communication format between the control panel and analog devices shall be 100% digital.

Loop alarm recognition must be within 750 milliseconds of a device going into the alarm state, with system response time no greater than 3 seconds. All devices shall support remote testing.

It must be possible to wire the circuit as Class B, Class A or Class X with non-shielded, non-twisted wire. It must be possible to wire branches (T-taps) with Class B wiring.

The driver controller must be manufactured in accordance with ISO 9001 standards.

The system must have tolerance to multiple failures. There must be a standalone mode of operation that will ensure the system is aware of alarms even if the local rail or main CPU fails.

Specifications (Signature Circuits)

Charts assume wire and devices are evenly distributed over length of circuit

Non-twisted, non shielded wire

Device type	# of Detectors	# of Module Addresses	#14 AWG (20pf/foot) (2.53 Ohm/1000ft)	#16 AWG (20pf/foot) (4.02 Ohm/1000ft)	#18 AWG (20pf/foot) (6.38 Ohm/1000ft)
Detectors only	125	0	14,752 feet (4,497 meters)	9,275 feet (2,827 meters)	5,839 feet (1,780 meters)
Modules only	0	125	12,599 feet (3,840 meters)	7,921 feet (2,414 meters)	4,986 feet (1,520 meters)
Detectors and Modules	125	125	5,738 feet (1,749 meters)	3,608 feet (1,100 meters)	2,271 feet (692 meters)
Detectors and Modules with 2-wire smokes	63	55 + 9 SIGA-UM	7,623 feet (2,324 meters)	4,793 feet (1,461 meters)	3,017 feet (920 meters)
Modules with 2-wire smokes	0	107 + 9 SIGA-UM	3,798 feet (1,158 meters)	2,388 feet (728 meters)	1,503 feet (458 meters)

Twisted pair non shielded wire

Device Type	# of Detectors	# of Module Addresses	#14 AWG (38pf/foot) (2.53 Ohm/1000ft)	1.5mm² (36pf/foot) (3.75 Ohm/1000ft)	#16 AWG (36pf/foot) (4.02 Ohm/1000ft)	1.0mm² (25pf/foot) (5.51 Ohm/1000ft)	#18 AWG (25pf/foot) (6.38 Ohm/1000ft)
Detectors only	125	0	13,157 feet (4,010 m)	9,933 feet (3,028 m)	9,275 feet (2,827 m)	6,760 feet (2,061 m)	5,839 feet (1,780 m)
Modules Only	0	125	12,599 feet (3,840 m)	8,483 feet (2,586 m)	7,921 feet (2,414 m)	5,774 feet (1,760 m)	4,986 feet (1,520 m)
Detectors & Modules	125	125	5,738 feet (1,749 m)	3,864 feet (1,178 m)	3,608 feet (1,100 m)	2,630 feet (802 m)	2,271 feet (692 m)
Detectors and modules with 2-wire smokes	63	55 + 9 SIGA-UM	7,623 feet (2,324 m)	5,133 feet (1,565 m)	4,793 feet (1,461 m)	3,494 feet (1,065 m)	3,017 feet (920 m)
Modules with 2-wire smokes	0	107 + 9 SIGA-UM	3,798 feet (1,158 m)	2,558 feet (780 m)	2,388 feet (728 m)	1,741 feet (531 m)	1,503 feet (458 m)

Twisted pair shielded wire

Device Type	# of Detectors	# of Module Addresses	#14 AWG (84pf/foot) (2.53 Ohm/1,000ft)	#16 AWG (82pf/foot) (4.02 Ohm/1,000ft)	#18 AWG (58pf/foot) (6.38 Ohm/1,000ft)
Detectors only	125	0	5,952 feet (1,814 meters)	6,098 feet (1,859 meters)	5,839 feet (1,780 meters)
Modules Only	0	125	5,952 feet (1,814 meters)	6,098 feet (1,859 meters)	4,986 feet (1,520 meters)
Detectors & Modules	125	125	5,738 feet (1,749 meters)	3,608 feet (1,100 meters)	2,271 feet (692 meters)
Detectors and modules with 2-wire smokes	63	55 + 9 SIGA-UM	5,952 feet (1,814 meters)	4,793 feet (1,461 meters)	3,017 feet (920 meters)
Modules with 2-wire smokes	0	107 + 9 SIGA-UM	2,558 feet (780 meters)	2,388 feet (728 meters)	1,503 feet (458 meters)

Specifications (controllers)

Catalog Number	3-SSDC1	3-SDDC1
Installation	1 LRM Space	1 LRM Space
Module Configuration	1 Addressable circuit (3-SDC1 Card) expandable to 2 circuits.	2 Addressable circuits (3-SDC1 Cards)
Operating Current [Note 2]	Standby 144 mA Alarm 204 mA	Standby 264 mA Alarm 336 mA
Operating Voltage	24 Vdc, Nominal	
Address Requirements	Automatic	
Detectors Supported	125 per 3-SDC1 Card	
Modules Supported	125 Module Addresses per 3-SDC1 Card	
2-Wire Smoke Power Output	100 mA per 3-SDC1 Card (not included in *Operating Current* above	
Conventional detectors supported	150 of 100 µA type per circuit.	
Signature Circuit Voltage	20 VDC +/- 5%	
Maximum Signature Circuit Resistance	100 Ohms	
Maximum Signature Circuit Capacitance	0.33 µF	
Communications Format	100% Digital	
Circuit Wiring Styles	Class B, Class A or Class X	
Termination	Removable plug-in terminal strip(s) on module	
Permissable Wire Size	18 to 12 AWG (0.75 to 2.5 mm²)	
Agency Listings	UL, ULC (see Note 1); CE, LPCB, EN54 (see Note 3).	
Operating Environment	32 °F (0 °C) to 120 °F (49 °C) 93% RH, non-condensing	

Note 1: Other EST3 components are modularly listed under the following standards:
UL 864 categories: UOJZ, UOXX, UUKL and SYZV, UL 294 category ALVY, UL 609 category AOTX, UL 636 category ANET, UL 1076 category APOU, UL 365 category APAW, UL 1610 category AMCX, UL 1635 category AMCX
ULC-S527, ULC-S301, ULC-S302, ULC-S303, ULC-S306, ULC/ORD-C1076, ULC/ORD-C693
Please refer to EST3 Installation and Service Manual for complete system requirements. EST4 may not have all the above listings. Please refer to EST4 Installation and Service Manual for complete listing details.

Note 2: Current shown Includes full loop of devices.

Note 3: *For EN 54-2: 1997 + A1: 2006, EN 54-4: 1997 + A1: 2002 + A2: 2006, and EN 54-16: 2008 compliant product add suffix -E to model eg. 3-SSDC1-E (verify device and loop controller compatibility). EN54 approval for EST3 applications only.

Ordering Information

Catalog Number	Description	Shipping Wt. lb (kg)
3-SSDC1	Single Signature Driver Controller. Comes with one 3-SDC1 Device Card. Mounts to Local Rail. *Add suffix "-E" for EN54 compliant versions.*	0.5 (0.23)
3-SDDC1	Dual Signature Driver Controller. Comes with two 3-SDC1s. Mounts to Local Rail. *Add suffix "-E" for EN54 compliant versions.*	0.5 (0.23)
3-SDC1	Signature Device Card - upgrades a 3-SSDC1 to a 3-SDDC1. *Add suffix "-E" for EN54 compliant versions.*	0.25 (0.11)
4-FIL	Blank EST4 filler plate (order separately when no LED or LED/Switch module is installed on the inner door).	0.1 (0.05)
3-FP	Filler Plate, order separately when no LED or LED/Switch module installed.	0.1 (0.05)

Note 1: EN54 approval for EST3 applications only.

LIFE SAFETY & INCIDENT MANAGEMENT

Contact us

Phone: 800-655-4497 (Option 4)
Email: edwards.fire@carrier.com
Website: edwardsfiresafety.com

8985 Town Center Pkwy
Bradenton, FL 34202

© 2020 Carrier
All rights reserved.

LIFE SAFETY & INCIDENT MANAGEMENT

Contact us

Phone: 800-655-4497 (Option 4)
Email: edwards.fire@carrier.com
Website: edwardsfiresafety.com

8985 Town Center Pkwy
Bradenton, FL 34202

©2023 Carrier
All Rights Reserved.

Ordering Information

Catalog Number	Description	Ship Wt., lb. (kg)
4-PPS/M	Primary Power Supply w/ local rail module 120-240V 50/60 Hz	5 (2.3)
4-PPS/M-E	Primary Power Supply w/ local rail module 120-230V 50/60 Hz, EN54 Certified, CE	5 (2.3)
3-BTSEN	Distribution Module required when battery installed in remote cabinet	.5 (.22)
3-BTSEN-E	Distribution module required when battery installed in a remote cabinet, (See EST4 European Marketplace Manual for wiring instructions)	.5 (.22
4-FIL	Blank EST4 filler plate (order separately when no LED or LED/Switch module is installed on the inner door) For use in EN54/UL/ULC markets	0.1 (0.05)
3-FP	Filler Plate, order separately when no LED or LED/Switch module installed. For use in EN54/UL/ULC markets	0.1 (0.05)
3-PPSKIT	Power supply distribution board required with EST3 systems	5 (2.27)
4-PPSKIT	Power supply distribution board required with EST4 systems (See EST4 European Marketplace Manual for wiring instructions)	6 (2.7)
3-FR8	Ferrite kit includes 8 ferrites for EN54 applications, (See EST4 European Marketplace Manual for wiring instructions)	1.5 (.68)
4-FERKIT1	FERKIT1 Ferrite kit includes 1 ferrite required for EN54 applications, (See EST4 European Marketplace Manual for wiring instructions)	1 (.45)
4-FERKIT2S	Ferrite kit includes 2 small ferrites required for EN54 applications, (See EST4 European Marketplace Manual for wiring instructions)	0.5 (.23)
4-FERKITS2L	Ferrite kit includes 2 large ferrite kits required for EN54 applications, (See EST4 European Marketplace Manual for wiring instructions)	1 (.45)
4-PWRDIST	PWR DSTRIBUTION,EMI FLTR BD, required for EN54 applications, (See EST4 European Marketplace Manual for wiring instructions)	2 (.90)

LIFE SAFETY & INCIDENT MANAGEMENT

EST4 Network Controllers

4-NET Series

NYC FIRE DEPT. COA # 6314

7165-1657: 0508

Overview

4-NET Series controllers are a series of small form factor pluggable (SFP) transceivers that provide physical media options for EST4 network cabling. The selection of the controller determines the media type. Eight models are available, each one offers a different kind of physical connection.

EST4 network controllers are easy to install and provide flexible solutions for system changes and upgrades. They mount into any EST4 panel on the life safety network by simply plugging into either of the two slots found on the 4-CPU, 4-ANNCPU, 4-CPUGRPH and 4-NET-AD modules. The controllers are hot-swappable and may be used in any combination of fiber, copper or CAT 5e or better cable.

Controllers allow vast distances between panels and thousands of addressable points. For example, a single IPv6 network can support up to an astonishing 200,000 addressable devices. Copper wire runs of nearly a mile between nodes puts detection, alarm, notification, and audio into the furthest reaches of the tallest buildings and broadest campuses.

EST4 gives the flexibility to configure the network to the needs of the installation, including no network redundancy (Class B), a single redundant connection (Class A/X), or any combination of styles including multiple redundant paths.

EST4 network controllers are used for panel-to-panel communications only. Connections to external networks are handled by 4-FWAL Series adapters. See the relevant literature for more information concerning firewalls and external network connections.

Standard Features

- **Multiple Connection Options**
  Hot pluggable SFP-style network controllers allow selection of twisted pair, fiber optic and CAT cables.
- **Supports multiple network configurations**
  Networks can be configured in Class B, Class A, Class X and Class N.
- **IPv6 Support**
  Autoconfiguring network for simple setup and easy network configuration.

Application

EST4 life safety communication is built on a self-configuring IPv6 network. 4-NET series SFP network controller modules provide the connection to physical inter-panel cabling. All SFPs are hot-swappable and mount in either of the two SFP slots found on 4-CPU, 4-ANNCPU, 4-CPUGRPH and 4-NET-AD modules.

Capacity for Large Projects

Robust physical interconnections facilitate a range of liberating network capacities. Twisted pair copper at 2 Mbps supports distances of up to 5,000 ft. (1.5 km) between any two panels; up to 50,000 ft. (15 km) at 0.2 Mbps when used with the 4-NET-XT. Single-mode, multimode, and even CAT 5 (or better) cable solutions are also available.

A single network cable carries all panel-to-panel services: data, voice audio, and firefighters' telephone. No separate interconnections are needed. This powerful feature reduces cable costs and installation time.

Powerful Network Security and Survivability

Cabling options satisfy even the most demanding redundancy and survivability requirements. The EST4 network can be configured for Class A, Class B, Class X, and Class N wiring. CAT5 installations are not limited to Class N wiring style: the network can be designed to meet Class A, Class B, and Class X configuration with CAT5 cable.

Network messages received by 4-NET controllers are routed by the CPU to the appropriate network link. As each link is an independent point-to-point connection wire run lengths between nodes are maximized.

Failsafe mechanisms are built right into EST4 network controllers. Should a connected CPU module go offline, the input and output ports automatically connect directly to one another. This operation provides a pass-through mode that maintains basic connectivity in the event of something as mundane as a routine power-down for servicing, or as catastrophic as the failure of a control panel.

The EST4 life safety network is a self-configuring IPv6 network that enables the full support for cybersecurity tested to meet FIPS publication 197. Salted Hashing of passwords, authentication and encryption of sensitive data (user PINs, node authentication) are all standard features. This security applies to a single panel or the full complement of nodes that the EST4 network can support.

SFP Passthrough Support, eth0 to eth1

	4-NET-CAT	4-NET-(fiber type)	4-NET-TP	4-NET-TP-HC
4-NET-CAT	✓	✓	✓	✓
4-NET-(fiber type)	✓	✓	✓	✓
4-NET-TP	✓	✓	✓	
4-NET-TP-HC	✓	✓		✓

Installation

4-NET controllers mount into any EST4 panel on the life safety network by simply plugging into either of the two slots found on the 4-CPU, 4-ANNCPU, 4-CPUGRPH or 4-NET-AD modules. The controllers are hot-swappable and may be combined to provide fiber, twisted-pair, or CAT5/6 connections as needed.

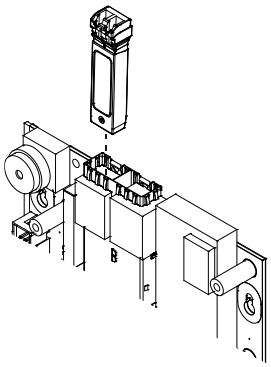

Engineering Specification

The system shall support communicating on a TCP/IP, IPv6 network that supports multiple network topologies including any mix of ring, bus, star and mesh. The network shall support physical media connections via fiber, twisted pair or CAT5 in any combination. The Network shall support data transmission of panel-to-panel data, voice audio and firefighters' telephone data on a single twisted pair or single optical fiber. The Network shall be configured as <Class A> <Class B> <Class X>. Networks restricted to Class N wiring shall not be acceptable. Network shall support a back-to-back pass through mode that maintains network connectivity on power down for servicing or catastrophic failure of a single panel.

For retrofit of existing installations the system shall support reuse of existing network wiring that meets the minimum wiring specification of the specified SFP controller, is electrically sound and is acceptable to the Authority Having Jurisdiction.

Technical Specifications

SFP Twisted Pair Specifications

	4-NET-TP	4-NET-TP-HC
Current	32mA at 24Vdc	
Circuit Capacitance	0.09 µF max. between two nodes	0.3 µF max. between two nodes
Data speed	2 Mbps TX/RX	0.3 Mbps TX/RX
Maximum Resistance	90 ohms	
Operating Temperature	32 to 120 °F (0 to 49 °C)	
Operating relative humidity	0 to 93% noncondensing	
Wire Size	One twisted pair, six twists per foot minimum, 16 to 24 AWG (1.3 to 0.20 mm²)	
Cable Connector type	Push-in, self clamping terminal block	
Agency Listings	UL, ULC, FM, CSFM	
Circuit Length	5,000 ft. (1,524 m) between any two nodes	
Data supported	Network, Voice Audio, Firefighters' Telephone, Pre-recorded messages.	Network, One channel Voice Audio, Pre-recorded messages.

SFP CAT Cabling Specifications

4-NET-CAT	
Voltage	
Current	45 mA at 24 VDC
Data Speed	100 Mbps TX/RX
Operating Temperature	32 to 120°F (0 to 49°C)
Operating Relative Humidity	0 to 93% noncondensing
Cable Supported	Cat 5e or better
Cable Connector Type	RJ-45
Agency Listings	UL, ULC, FM, CSFM
Circuit Length	328 ft. (100 m) max.
Data supported	Network, Voice Audio, Firefighters' Telephone
Cable Rating	Fire or plenum

4-NET-TP using CAT 5e or better cable	
Voltage	
Current	45 mA at 24 VDC
Circuit Capacitance	N/A
Circuit Resistance	N/A
Data Speed	2 Mbps TX and RX
Operating Temperature	32 to 120 °F (0 to 49 °C)
Operating Relative Humidity	0 to 93% noncondensing
Wire size	22 to 24 AWG
Cable Connector Type	terminal block
Agency Listing	UL, ULC, FM, CSFM
Circuit Length	3280 ft (1,000m)
Data Support	Network, Voice Audio, Firefighters' Telephone
Cable Rating	Fire or plenum

SFP Cabling Specifications

SFP network controller	Wavelength (nm)	Fiber type	Core size (microns) [1]	Modal bandwidth (Mhz/km) [2]	Cable distance Miles (km)
4-NET-MM [2]	1310	OM1/OM2	62.5um/50um	500	1.24 miles (2 km)
4-NET-SM	1310	G.652	9	N/A	8.7 miles (14 km)
4-NET-SMH	1310	G.652	9	N/A	24.8 miles (40 km)
4-NET-SMU	1310	G.652	9	N/A	6.2 miles (10 km)
4-NET-SMD	1550	G.652	9	N/A	6.2 miles (10 km)

[1] G.652, listed under core size for single mode fiber (SMF), refers to an ITU-T standard of commonly deployed non-dispersion-shifted single mode fiber with a core size of approximately 8 to 10 microns (µm).

[2] The maximum cable distance will be reduced when using fibers with less than 500 MHz/km bandwidth. For example, a 62.5u/125u step-index fiber may have a modal bandwidth as low as 160 MHz/km. This translates to a maximum 100Base link length of about 640 m. If 100u core fiber is installed, the length could be reduced to about 150 m.

SFP Optical Specifications

SFP network controller	Transceiver type	Transmit power (dBm)		Receive power (dBm)		Max channel insertion loss in dB (by fiber type) [1]	Transmit and receive wavelength (nm)
		Min	Max	Min	Max		
4-NET-MM	100Base-FX	-20	-14	-31	-14	10 (62.5/125um OM1)	1300/1300
4-NET-MM	100Base-FX	-20	-14	-31	-14	5 (50/125um OM2)	1300/1300
4-NET-SM	100Base-LX10	-15	-8	-25	-8	5	1310/1310
4-NET-SMH [2]	100Base-LX40	-5	0	-33	-10	25 (10 dB min)	1310/1310
4-NET-SMU	100Base-BX10-U	-14	-8	-27	-8	5	1310/1550
4-NET-SMD	100Base-BX10-D	-14	-8	-27	-8	5	1550/1310

[1] Maximum channel insertion loss is defined for maximum distance guaranteed as specified in the Cabling Specifications table above and by fiber type/core diameter. When links are deployed over shorter distances, additional channel insertion loss may be allowed. Actual performance may allow greater insertion loss.

[2] 4-NET-SMH requires a minimum 10db insertions loss. If the insertion loss is less than 10db, a single mode attenuator is required to obtain the minimum 10db loss.

4-NET- fiber optic SFPs	
Current Standby/Alarm	5 mA at 24 VDC
Data speed	100 Mbps TX/RX
Operating Temperature	32 to 120°F (0 to 49°C)
Operating Relative humidity	0 to 93% noncondensing
Cable Specification	See *SFP Cabling Specifications* above.
Cable Connector type	LC simplex for 4-NET-SMU and 4-NET-SMD, LC duplex, for all other fiber controllers
Agency Listings	UL, ULC, FM, CSFM

LIFE SAFETY & INCIDENT MANAGEMENT

Contact us

Phone: 800-655-4497 (Option 4)
Email: edwards.fire@carrier.com
Website: edwardsfiresafety.com

8985 Town Center Pkwy
Bradenton, FL 34202

© 2020 Carrier
All rights reserved.

Ordering Information

Model # (SKU)	Description	Shipping Weight
4-NET-TP	SFP Network Controller, 2Mbps Shared TX/RX, Twisted Pair or Cat 5.	0.2lb (0.091kg)
4-NET-TP-HC[1]	SFP Network Controller, 0.3Mbps Shared TX/RX, High Capacitance Twisted Pair	0.2lb (0.091kg)
4-NET-MM	SFP Network Controller, Multimode, Dual-Fiber, 100Base-FX 1310nm	0.248lb (0.112kg)
4-NET-SM	SFP Network Controller, Single-Mode, Dual-Fiber, 100Base-LX10 1310nm	0.248lb (0.112kg)
4-NET-SMD	SFP Network Controller, Single-Mode, Single-Fiber, Downlink, 100Base-BX10-D 1550nm/1310nm Tx/Rx, works with 4-NET-SMU	0.248lb (0.112kg)
4-NET-SMU	SFP Network Controller, Single-Mode, Single-Fiber, Uplink, 100Base-BX10-U 1310nm/1550nm Tx/Rx works with 4-NET-SMD	0.248lb (0.112kg)
4-NET-SMH	SFP Network Controller, Single-Mode, Dual-Fiber, 100Base-High Output 1310nm,	0.248lb (0.112kg)
4-NET-CAT	SFP Network Controller, CAT5 UTP Copper, 100Base-TX, 100Mbps	0.2lb (0.091kg)

[1] Not for use with new installations.

EDWARDS

LIFE SAFETY & INCIDENT MANAGEMENT

EST4 Cabinets and Chassis

4-CAB Series, 3-CAB Series 3-RCC series, BC-1

4-CAB Series shown with optional equipment.

Overview

EST4 has a wide selection of cabinet arrangements allowing the greatest use of EST4's flexible modular design.

Cabinets support more interfaces and display modules than earlier systems, which means smaller or fewer cabinets need to be installed to provide the same display capacity. Cabinets also support optional mounting of Signature Series modules, which is another way to reduce the use of external cabinets.

Lobby enclosure wallboxes and doors are made from sturdy 14-gauge rolled steel. Wallboxes have a black baked enamel finish. Lobby enclosure doors feature a modern contoured door design and integral viewing windows. They come with metallic bronze (Pantone Coated PMS# P 171-16 C, Pantone RGB# 81 75 67, and RAL Classic/RAL Design# 7022) or red baked enamel finishes. The door designs and colors ensure that there is a match to system annunciators and battery cabinets for a consistent look throughout the facility.

Doors may be mounted as remote annunciators without the need to have large CAB enclosures behind. This allows larger equipment to be mounted remotely, minimizing wall penetrations in lobbies and public spaces, and removing the need to home-run all field wiring.

The EST4 lobby enclosures backboxes, doors and chassis units are ordered and shipped separately for easy staging on project sites. With a variety of sizes available, customized installations offer the flexibility to support up to two color LCD touch screens, and LED and switch modules offering configurations of 576 five color LED indicators, as well as 576 control switches along with microphone and firefighters' telephone options.

Standard Features

- **Left or Right-hand Hinging Doors**
  Allows the mounting of two cabinets side-by-side with full access while both doors are open.
- **Lag and Keyway Holes**
  Makes mounting of enclosures quicker and easier.
- **Attractive Contour Door Design**
  Lobby enclosures, annunciators, with their contour door designs, feature color-matched black wallboxes that complement distinctive metallic bronze doors.
- **Combination Flush or Surface Mounting Lobby Enclosure**
  Quicker installation with semi-flush trim built-in.
- **RCC Series House up to 65 Amp Hour Batteries**
  Remote Closet Cabinets support larger battery sizes reducing the number of boxes required.
- **Maximum Space for optional Control Display Modules**
  Inner doors not only support the user interface layer, but also acts as a deadfront so field wiring remains protected during system operation.
- **Optional Earthquake Hardening**
  OSHPD Seismic Pre-Approval For Component Importance Factor 1.5
- **Knockouts for 3/4-inch Conduit**
- **BC Series Support up to 40 AH Batteries**

Application

Lobby Enclosures

EST4 lobby enclosures provide space for control, monitoring and display modules where they remain visible even with the door closed and secure. Ideal for mounting in lobbies where appearance is important, doors will mount for right or left hand opening. Lobby enclosures come in several sizes to match individual project requirements.

The **3-CAB5B** mounts semi-flush or surface. A built-in rail assembly provides space for up to five local rail modules, no chassis assembly needed. Back space for 1-1/2 footprints provides room for a power supply, a 1/2 footprint module, and 10 AH batteries. The local rail module spaces provide room for amplifiers, SLC, and other modules. The 4-CAB8D or 4-CAB8DR door mounts to the 3-CAB5B providing eight spaces for user interface modules.

The **3-CAB7B** mounts semi-flush or surface, and with the contoured front door, 4-CAB16D(R) provides 16 spaces for common control and annunciation modules. Space is provided for two 17 AH batteries and one chassis assembly providing seven local rail module spaces. The door may be mounted with hinges on the left or on the right.

The **3-CAB14B** mounts semi-flush or surface, and with the contoured front door, 4-CAB24D(R) provides 24 spaces for common control and annunciation modules. Space is provided in the cabinet for two 17 AH batteries and two chassis assemblies providing 14 local rail module spaces. The door may be mounted with hinges on the left or on the right.

The **3-CAB21B** mounts semi-flush or surface, and with the contoured front door, 4-CAB24D(R)L provides 24 spaces for common control and annunciation modules. Space is provided for two 17 AH batteries and three chassis assemblies for 21 local rail module spaces. The door may be mounted with hinges on the left or on the right.

Remote Closet Cabinets

Remote Closet Cabinets provide an efficient way of installing equipment in locations such as electrical closets. An optional color LCD display module for system diagnostics can be mounted behind the front door. The LCD display module will not be visible with the door closed. Remote closet cabinets are surface-mounting and come in sizes providing space for one to three chassis with room for standby batteries. The Remote Closet Cabinets designs allow them to be used as remote battery cabinets and their red door and black wallbox match exactly the red and black of lobby cabinets for a clean finished installation.

Installation and Mounting, 4-CAB Door Assemblies

4-CAB8D Series Door Assembly

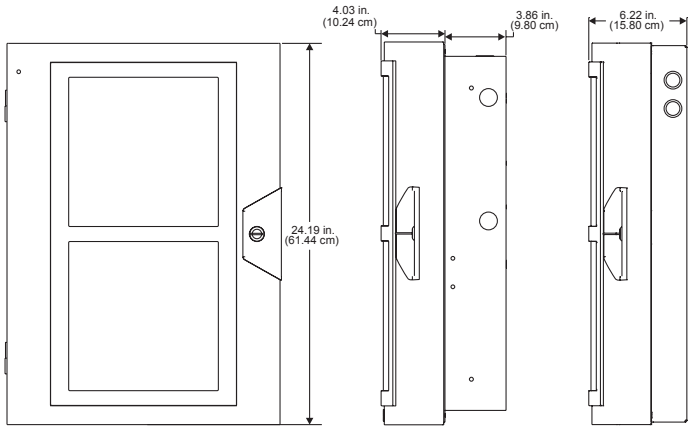

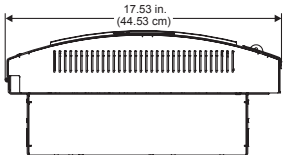

4-CAB8D installed on a 3-CAB5B back-box. Can be surface mounted or semiflush mounted.

(2) 4-CAB8D installed on a 4-8ANNMT back-box. Can be surface mounted only

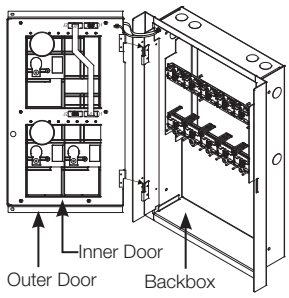

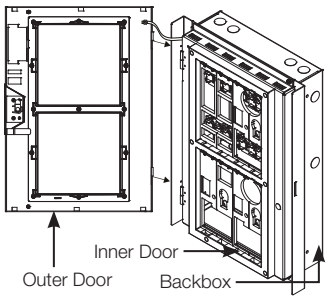

4-CAB16D Series Door Assembly

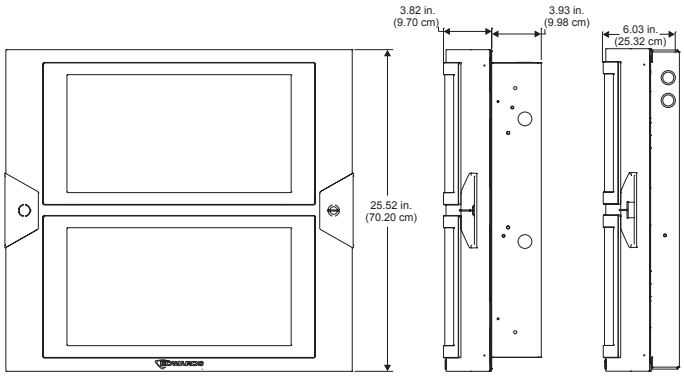

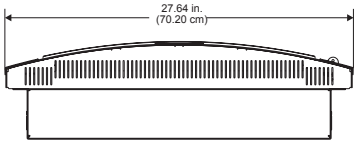

4-CAB16D installed on a 3-CAB7B backbox. Can be surface mounted or semiflush mounted.

4-CAB16D installed on a 4-16AN-NMT backbox. Can be surface mounted only.

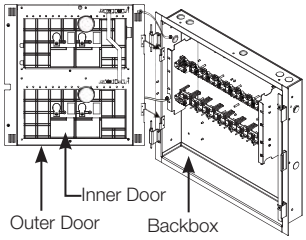

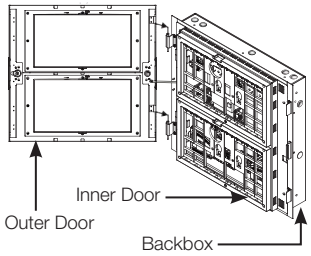

4-CAB24D Series Door Assembly

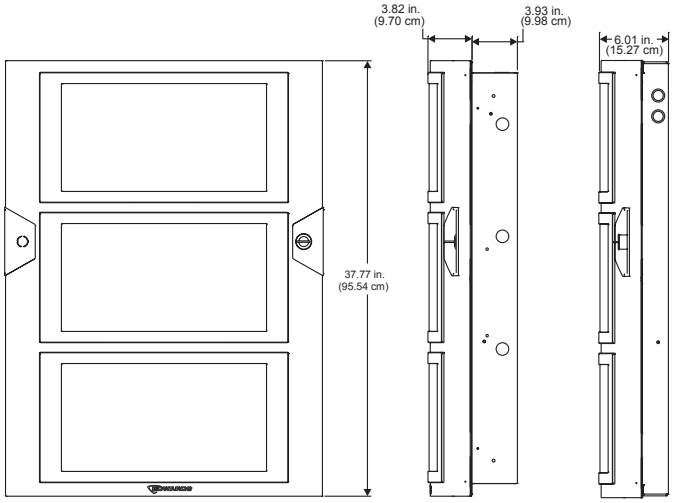

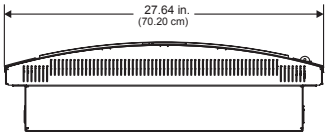

4-CAB24D installed on a 3-CAB14B backbox. Can be surface mounted or semiflush mounted.

4-CAB24D installed on a 4-24ANNMT backbox. Can be surface mounted only.

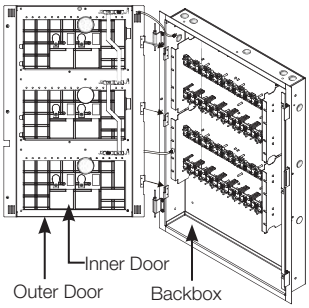

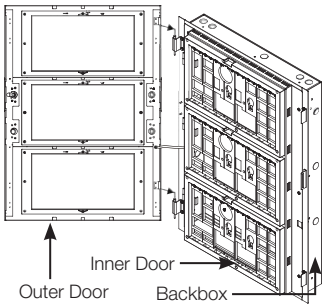

4-CAB24DL Dimensions

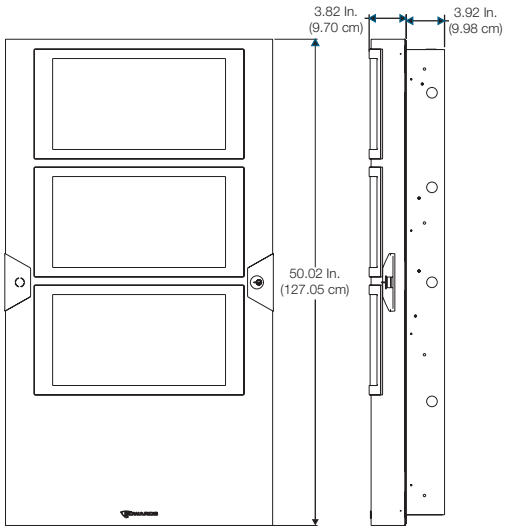

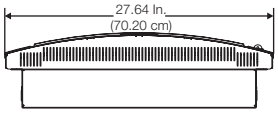

3-CAB Lobby Enclosures

3-CAB7B, 3-CAB14B, 3-CAB21B Lobby Enclosures

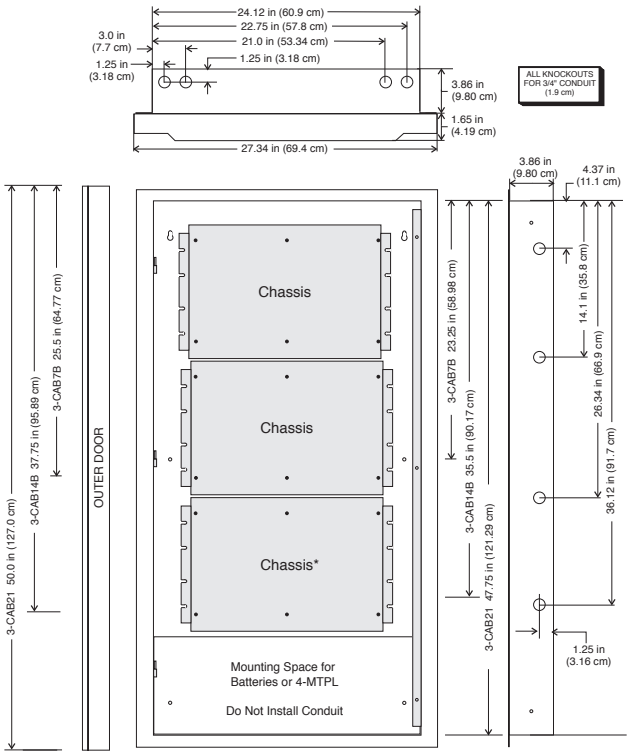

3-CAB5B Lobby Enclosure

(1) Top view

(2) Mounting stud for ground strap

(3) Backbox

(4) Battery area, do not install conduit if installing batteries

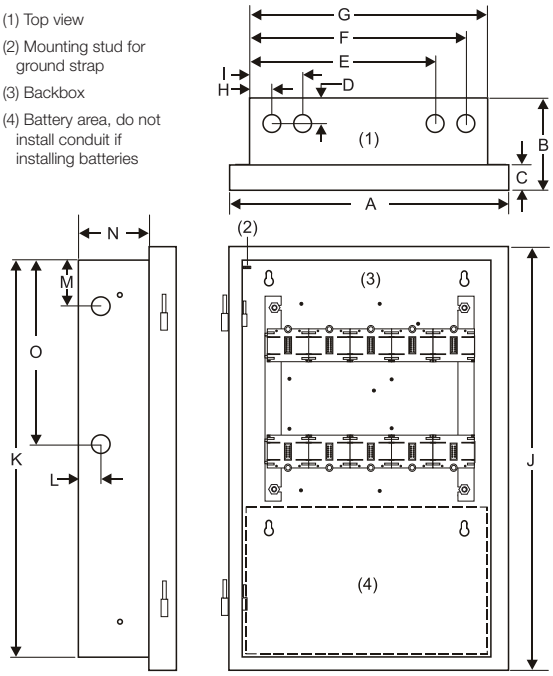

A	16.4 in (41.66 cm)	**F**	12.70 in. (32.26 cm)	**K**	22.37 in. (56.82 cm)
B	3.86 in (9.80 cm)	**G**	14.00 in. (35.56 cm)	**L**	1.11 in. (2.82 cm)
C	1.65 in. (4.19 cm)	**H**	1.30 in. (3.30 cm)	**M**	2.6 in. (6.6 cm)
D	1.34 in. (3.40 cm)	**I**	3.1 in. (7.87 cm)	**N**	3.86 in. (9.80 cm)
E	10.90 in. (27.69 cm)	**J**	23.87 in. (60.63 cm)	**O**	10.4 in. (26.42 cm)

3-RCC Remote Closet Cabinets

Surface Mounted Remote Closet Cabinets
3-RCC7R, 3-RCC14R, 3-RCC21R

3-RCC Remote Closet Cabinet

The EST4 remote closet cabinet design allows the installation of control panel electronics in electrical closets. The remote closet cabinets have left-hand hinged doors and are available with red door finish and black wallbox only. Optional color display for system diagnostics can mount behind the closet cabinet door and is not visible with the door closed.

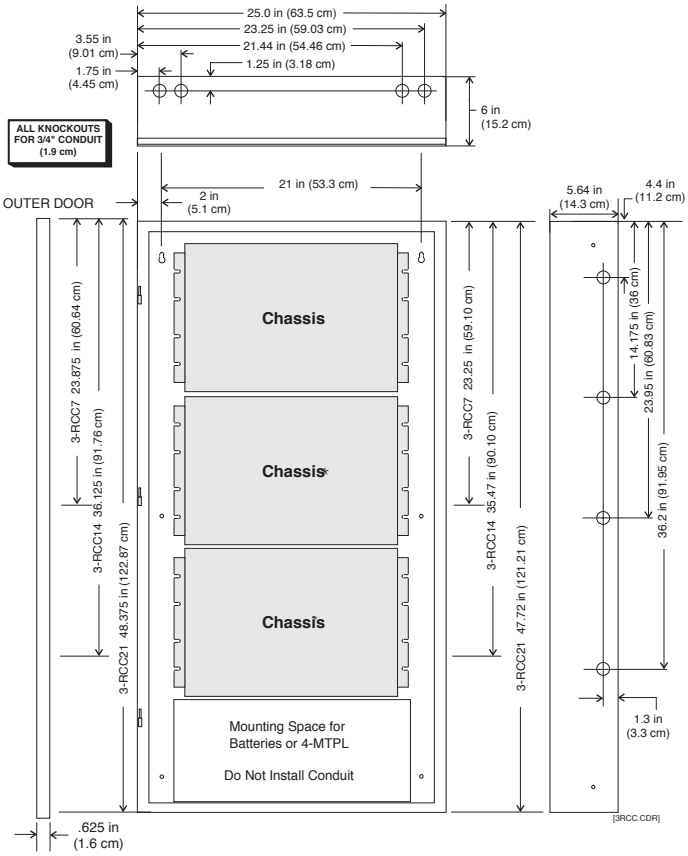

* The lower mounting space can be used for an MN-BRKT1 bracket, which holds MNEC interface equipment including an MN-NETSW1 Ethernet network switch, an MN-ABPM Audio bridge, an MN-FVPN VoIP module, and an MN-COM1S Communications module.

BC-1 Battery Cabinet

BC-1 Battery Cabinet

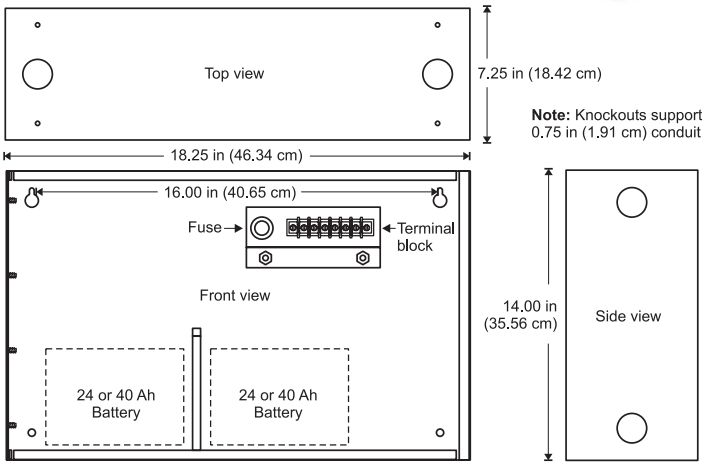

Ordering Information

Model # (SKU)	Description	Shipping Weight
Backboxes		
3-CAB5B	Backbox, black. Supports five Local Rail Modules. Not approved for EN54 applications.	20.0lb (9.07kg)
3-CAB7B	Backbox, black. Supports seven Local Rail Modules. Comes with space for one 3-CHAS7 and room for up to two 17 AH batteries. When batteries are mounted remotely, battery space may be used for 4-MPLT for mounting of optional equipment.	29.5lb (13.4kg)
3-CAB14B	Backbox, black. Supports 14 Local Rail Modules. Comes with space for one or two 3-CHAS7s and room for up to two 17 AH batteries. When batteries are mounted remotely, battery space may be used for 4-MPLT allowing mounting of optional equipment.	40.8lb (18.5kg)
3-CAB21B	Backbox, black. Supports 21 Local Rail Modules. Comes with space for one, two or three 3-CHAS7s and room for up to two 17AH batteries. When batteries are mounted remotely, battery space may be used for 4-MPLT allowing mounting of optional equipment.	51.3lb (23.3kg)
Door Assemblies, Eight User Interface Spaces (mount to 3-CAB5B backbox)		
4-CAB8D	Door Assembly – Metallic bronze outer door and black inner door with 8 user interface spaces, mounts to 3-CAB5B wallbox. Not approved for EN54 applications.	23.0lb (10.43kg)
4-CAB8DR	Door Assembly – Red outer door and black inner door with 8 user interface spaces, mounts to 3-CAB5B wallbox. Not approved for EN54 applications.	23.0lb (10.43kg)
Door Assemblies, 16 User Interface Spaces (mount to 3-CAB7B backbox)		
4-CAB16D	Door Assembly – Metallic bronze, comes with 16 User Interface spaces, mounts to 3-CAB7B wallbox.	36.0lb (16.33kg)
4-CAB16D-E	Door Assembly – Metallic bronze, comes with 16 User Interface spaces, mounts to 3-CAB7B wallbox. For EN54 applications.	36.0lb (16.33kg)
4-CAB16DR	Door Assembly – Red, comes with 16 User Interface spaces, mounts to 3-CAB7B wallbox.	36.0lb (16.33kg)
4-CAB16DR-E	Door Assembly – Red, comes with 16 User Interface spaces, mounts to 3-CAB7B wallbox. For EN54 applications.	36.0lb (16.33kg)
Door Assemblies, 24 User Interface Spaces (mount to 3-CAB14B backbox)		
4-CAB24D	Door Assembly – Metallic bronze outer door and black inner door with 24 user interface spaces, mounts to 3-CAB14B wallbox.	51.0lb (23.13kg)
4-CAB24D-E	Door Assembly – Metallic bronze outer door and black inner door with 24 user interface spaces, mounts to 3-CAB14B wallbox. For EN54 applications.	51.0lb (23.13kg)
4-CAB24DR	Door Assembly – Red outer door and black inner door with 24 user interface spaces, mounts to 3-CAB14B wallbox.	51.0lb (23.13kg)
4-CAB24DR-E	Door Assembly – Red outer door and black inner door with 24 user interface spaces, mounts to 3-CAB14B wallbox. For EN54 applications.	51.0lb (23.13kg)
Door Assemblies, 24 User Interface Spaces (mounts to 3-CAB21B backbox)		
4-CAB24DL	Door Assembly – Metallic bronze outer door and black inner door with 24 user interface spaces, mounts to 3-CAB21B wallbox.	65.0lb (29.48kg)
4-CAB24DL-E	Door Assembly – Metallic bronze outer door and black inner door with 24 user interface spaces, mounts to 3-CAB21B wallbox. For EN54 applications.	65.0lb (29.48kg)
4-CAB24DRL	Door Assembly – Red outer door and black inner door with 24 user interface spaces, mounts to 3-CAB21B wallbox.	65.0lb (29.48kg)
4-CAB24DRL-E	Door Assembly – Red outer door and black inner door with 24 user interface spaces, mounts to 3-CAB21B wallbox. For EN54 applications.	65.0lb (29.48kg)
Equipment Wallboxes		
3-RCC7R	Cabinet with Red door and Black wallbox. Supports up to one 3-CHAS7 and Two - 12V10A or Two - 12V17A, or Two - 12V50A. When batteries are mounted remotely, battery space may be used for 4-MPLT allowing mounting other optional equipment.	45.9lb (22.6kg)
3-RCC14R	Cabinet with Red door and Black wallbox. Supports up to two 3-CHAS7 and Two - 12V10A or Two - 12V17A, or Two - 12V50A or Two - 12V65 (See note 1). When batteries are mounted remotely, battery space may be used for 4-MPLT allowing mounting other optional equipment.	62.1lb (28.2kg)
3-RCC21R	Cabinet with Red door and Black wallbox. Supports up to three 3-CHAS7 and Four - 6V8A, or Two - 12V10A, or Two - 12V17A, or Two - 12V50A, or Two - 12V65 (See note 1). When batteries are mounted remotely, battery space may be used for 4-MPLT allowing mounting other optional equipment.	79.0lb (35.8kg)
Battery Cabinets		
BC-1	Battery Cabinet – Black back box, Metallic bronze door. Supports up to 40AH batteries	19.8lb (9kg)
BC-1R	Battery Cabinet – Black backbox, red door. Supports up to 40AH batteries.	19.8lb (9kg)

Note 1: Remote closet cabinets will support 65 AH batteries with the use of the 3-BATS Battery Shelf, which reduces the enclosure's chassis capacity by one chassis.

LIFE SAFETY & INCIDENT MANAGEMENT

Contact us

Phone: 800-655-4497 (Option 4)
Email: edwards.fire@carrier.com
Website: edwardsfiresafety.com

8985 Town Center Pkwy
Bradenton, FL 34202

© 2020 Carrier
All rights reserved.

Accessories and Related Equipment

Model # (SKU)	Description	Shipping Weight
4-LOCK2KEY	Replacement door lock and two keys	1.0lb (0.45kg)
4-HNG714	Replacement Hinge Assembly CAB7 or 14	1.5lb (0.68kg)
4-HNG21	Replacement Hinge Assembly CAB21	2.0lb (0.91kg)
3-CHAS7	Takes one chassis space in wallbox, provides space for seven local rail modules, up to two power supplies, and a 1/2 footprint module.	9.4lb (4.2kg)
3-CHAS7-I	Takes one chassis space in wallbox, provides space for seven local rail modules, up to two power supplies, and a 1/2 footprint module. For EN54 applications.	9.4lb (4.2kg)
4-MPLT	Mounting Plate mounts in chassis space or in the battery space of cabinets in place of batteries.	4.3lb (1.95kg)
4-BRKT-CB	Mounting Bracket provides space for mounting any one of 4-ANNCPU, 4-FWAL-1, 4-FWAL-2, 4-FWAL-3, 4-FWAL-4, or a 4-NET-AD module. Mounts on the back plane of a 3-CHAS7.	1.1lb (0.5kg)
4-BRKT-CS	Mounting Bracket provides space for mounting any one of 4-FWAL-1, 4-FWAL-2, 4-FWAL-3, 4-FWAL-4, or a 4-NET-AD module. The bracket mounts to the side of a 3-CHAS7.	1.2lb (0.54kg)
3-BTSEN	Battery sensor/distribution module.	2.0lb (0.9kg)
3-BTSEN-E	Remote battery cabinet interlace, temperature sensing. For EN54 applications.	1.0lb. (0.45kg)
3-BATS	Battery Shelf for RCC Enclosures. Takes one chassis space. Room for up to one 65 AH or two 50 AH batteries.	3.9lb (1.8kg)
BC-1EQ	BC-1 - Seismic Battery hold down for BC-1. Supports up to two 40 Ahr batteries. Order BC-1 Separately.	2.1lb (1kg)
3-CABEQ	3-CAB - Seismic Battery hold-down for 3-CAB 7, 14 or 21. Supports two 1 2V batteries from 10 Ah up to 18 AH. Comes with EST3 Chassis hardening hardware and instructions. Order 3-CAB7, 3-CAB14 or 3-CAB21 separately. See Note 1.	2.5lb (1.1kg)
3-RCCEQ50	3-RCC series - Seismic Battery hold-down. Supports one set of two 50 Ah batteries. Comes with EST3 Chassis hardening hardware and instructions. Order 3-RCCxxR separately. See Note 1.	1.6lb (0.7kg)
3-RCCEQ65	3-RCC series cabinet - Seismic Battery hold-down. Supports one set of two 65 Ah batteries (one battery in bottom of cabinet, one battery mounted on 3-BATS). Order 3-RCCxxR cabinet and 3-BATS separately. See Note 1.	4.3lb (2kg)
4-TAMP	Tamper switch for 3-CAB7B, 3-CAB14B and 3-CAB21B cabinets with 4-CABXXD series doors. Mounts to side of cabinet.	0.45lb (0.2kg)
3-TAMPRCC	3-TAMPRCC Tamper Switch for RCC series cabinets. Mounts to side of cabinet.	0.5lb (0.2kg)
3-TAMP5	Tamper switch for 3-CAB5B. Mounts to side of cabinet.	0.3lb (0.1kg)
4-CABLUSBLG	Long USB 3.0 Cable w/ A and B connector Types	0.3lb (0.14kg)

The above enclosures and doors are fully listed to UL-864 and ULC-S527 standards.

Note 1: For earthquake anchorage, including detailed mounting weights and center of gravity detail, please refer to the Seismic Application Guide. Approval of panel anchorage to site structure may require local AHJ, structural, or civil engineer review.

Note 2: Unless otherwise specified, all SKUs may be used in EN54/UL/ULC applications.

CALIFORNIA DEPARTMENT OF FORESTRY & FIRE PROTECTION
OFFICE OF THE STATE FIRE MARSHAL
FIRE ENGINEERING & INVESTIGATIONS DIVISION
BUILDING MATERIALS LISTING PROGRAM

LISTING SERVICE

LISTING No.:	7170-1657:0508
CATEGORY:	7170 - CONTROL UNIT (HIGH-RISE)
LISTEE:	EDWARDS, A Division of UTC Fire & Security Americas Corporation, Inc. 8985 Town Center Parkway, Bradenton, FL, 34202 Contact: Rodgers, Teresa 941-739-4225 Email: teresa.rodgers@carrier.com
DESIGN:	Edwards Model EST4 Commercial Fire Alarm Control Unit, local, auxiliary, remote station, (DACT), central station, releasing station, and smoke control. Existing components used from the Model EST3 fire alarm control unit (CSFM Listing No. 7165-1657:0186) include power supplies, LRMs, modules, devices, relays and amplifiers. Refer to listee's data sheet for additional detailed product description and operational considerations. System Subassemblies: 4-FIL: Filler Plate 4-CAB8D, 4-CAB8DR: Door Assembly 4-CAB16D, 4-CAB16DR: Door Assembly 4-CAB24D, 4-CAB24DR, 4-CAB24DL, 4-CAB24DRL: Door Assembly 4-BRKT-CB, 4-BRKT-CS: Mounting Bracket 4-MPLT: Mounting Plate 4-TAMP, 3-TAMP, 3-TAMP5, 3-TAMPRCC: Tamper Switch 4-2ANNSK: Keyless Lock 4-2ANNFA, 4-4ANNFA, 4-6ANNFA, 4-8ANNFA, 4-4x2ANNFA: Frame Assemblies 4-LOCK2KEY: Door Lock 4-HNG714, 4-HNG21: Hinge Assemblies 3-CAB5B: Backbox Enclosure 4-CABL0502, 4-CABL0504, 4-CABL0505, 4-CABL0507, 4-CABL0509, 4-CABL0541, 4-CABL0542: Flex Cables 4-24L, 4-24L24S, 4-24L18S, 4-24L12S: Field Configurable LED and Switches 4-ANNAUDTEL: Analog to Digital Audio Card 4-ANNCPU: Annunciator Central Processor Unit (CPU) 4-AUDTELS: Analog to Digital Audio Card

4-CPU: Central Processor Unit

4-ASDCPU: Aspirating Smoke Detector CPU Module

4-FT: Master Fire Fighters Telephone

4-LCD: Main Display Module

4-3LCD: Retrofit Upgrade EST3 Main 3-LCD Display Module

4-LCDAUDTEL: Audio and Fire Fighter Telephone Control Display Module

4-MIC: Audio Paging Microphone

4-NET-XT: Network Extender

4-USBHUB: Multipart USB Hub

4-FWAL1, 4-FWAL2, 4-FWAL3, 4-FWAL4: Configurable Firewall

4-NET-AD: Network Adder

4-COMREL: Optional Common Alarm, Trouble, Common Supervisory, Relay Module

4-NET-MM, 4-FWAL-MM: EST4 Fire Network Controller SFP Style Multi-Mode Fiber Optic

4-NET-SM, 4-FWAL-SM: EST4 Network Controller, Single Mode Fiber

4-NET-SMD, 4-FWAL-SMD: EST4 Network Controller, Single Mode Fiber

4-NET-SMU, 4-FWAL-SMU: Fiber Network Controller

4-NET-SMH, 4-FWAL-SMH: Fiber Network Controller

4-NET-CAT, 4-FWAL-CAT: EST4 Fire Network Controller

4-NET-TP. 4-NET-TP-HC: Network Controller

4-UIRAIL4, UIRAIL6, UIRAIL8: 4, 6, 8 Slot UI RAIL Mounts to UI Frame

*4-SDC: Signature data circuit card.

*4-SDDC: Dual Signature loop controller module.

*4-SSDC: Single Signature loop controller module with option to add a second loop.

3-PPS/M(-230): Primary Power Supply

3-BPS/M(-230): Booster Power Supply

3-BBC/M(-230): Booster/Charger Supply

3-SDC1: Signature Data Circuit Card

3-SDC1-HC: Signature Data Circuit Card

3-SDDC1/2: Signature Dual Driver Controller

3-SSDC1/2: Single Signature Driver Controller

3-IDC8/4: Initiating Device Circuit Module

3-MODCOM: Modern/Communicator (DACT)

3-MODCOMP: Modern/Communicator (DACT) Plus Paging

3-OPS: Off Premises Signaling Module

3-ZA20(A/B): 20W Zone Amplifier

3-ZA40(A/B): 40W Zone Amplifier

3-ZA95: 95W Zone Amplifier

3-LDSM: LED Display Support Module

3-LRMF: Blank LRM Filler (Plastic)

3-24R: Annunciator Strip with 24 Red LEDs

3-24Y: Annunciator Strip with 24 Yellow LEDs

3-24G: Annunciator Strip with 24 Green LEDs

3-12RY: Annunciator Strip with 12 Red-Over-Yellow Pairs of LEDs

3-12SG: Annunciator Strip with 12 LED-Switch Groups. Each group consists of one switch and one green LED.

3-12SR: Annunciator Strip with 12 LED-Switch Groups. Each group consists of one switch and one red LED.

3-12SY: Annunciator Strip with 12 LED-Switch Groups. Each group consists of one switch and one yellow LED.

3-12/S1GY: Annunciator Strip with 12 LED-Switch Groups. Each group consists of one switch and one green-over-yellow pair of LEDs.

3-12/S1RY: Annunciator Strip with 12 LED-Switch Groups. Each group consists of one switch and one red-over-yellow pair of LEDs.

3-12/S2Y: Annunciator Strip with 12 LED-Switch Groups. Each group consists of one switch and one yellow-over-yellow pair of LEDs.

3-12/S2R: Annunciator Strip with 12 LED-Switch Groups. Each group consists of one switch and one red-over red pair of LEDs.

3-6/3S1G2Y: Annunciator Strip with 6 LED-Switch Groups. Each group consists of three switches and three LEDs (one green and two yellow).

3-6/3S1GYR: Annunciator Strip with 4 LED-Switch Groups. Each group consists of three

LISTING SERVICE

	switches and three LEDs (one green, one yellow, and one red). 3-6/3S2RY: Annunciator Strip with 4 LED-Switch Groups. Each group consists of three switches and three LEDs (two red and one yellow). 3-4/3SGYWR: Annunciator Strip with 4 LED-Switch Groups of 3 LED-Switches with Green LEDs (top switch), Yellow-Over-White LEDs (middle switch), and Red LEDs (bottom switch) 3-RCC14(R): Remote Closet Cabinet 3-RCC21(R): Remote Closet Cabinet 3-RCC7(R): Remote Closet Cabinet 3-RCCEQ50: Remote Closet Cabinet, Seismic Kit for 50Ah Batteries 3-RCCEQ65: Remote Closet Cabinet, Seismic Kit for 65Ah Batteries
RATING:	120 VAC 50/60HZ, 240 VAC 50/60HZ, 24 VDC
INSTALLATION:	In accordance with listee's printed installation instructions, NFPA 72, applicable codes and ordinances, and in a manner acceptable to the authority having jurisdiction.
MARKING:	Listee's name, model number, electrical rating, and UL label.
APPROVAL:	Listed as a fire alarm control unit for use with separately listed compatible initiating and indicating devices. This control unit can generate a distinctive three-pulse Temporal Pattern Fire Alarm Evacuation Signal (for total evacuation) in accordance with NFPA 72. Model complies with the applicable requirements in UL 864, 10th Edition. Refer to manufacturer’s Installation, Operation & Maintanance Manuals for details.
NOTES:	

07-30-25 MH

*Revised

This listing is based upon technical data submitted by the applicant. OSFM Fire Engineering staff has reviewed the test results and/or other data but does not make an independent verification of any claims. This listing is not an endorsement or recommendation of the item listed. This listing should not be used to verify correct operational requirements or installation criteria. Refer to listee's data sheet, installation instructions and/or other suitable information sources.

Date Issued: 07/31/2025 **Listing Expires: 06/30/2026**

CALIFORNIA DEPARTMENT OF FORESTRY & FIRE PROTECTION
OFFICE OF THE STATE FIRE MARSHAL
FIRE ENGINEERING & INVESTIGATIONS DIVISION
BUILDING MATERIALS LISTING PROGRAM

LISTING SERVICE

Authorized By: **Michael Huang**, Program Coordinator
Fire Engineering & Investigations Division

EDWARDS

LIFE SAFETY & INCIDENT MANAGEMENT

System Power Supplies

4-PPS/M series

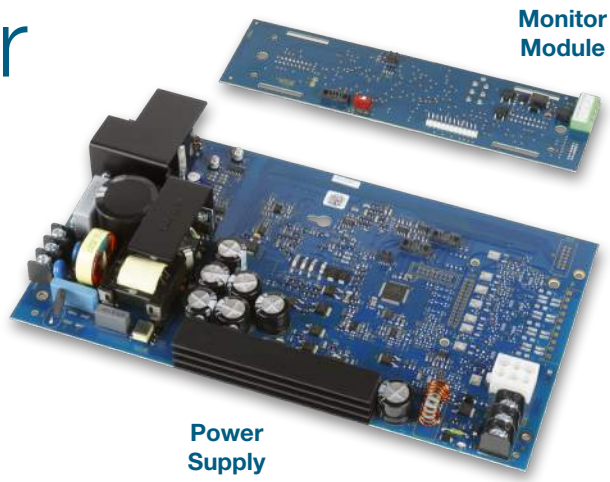

Approvals

EST4	EST3
UL	UL
ULC S3000	ULC S3000
CE	CE
FM APPROVED	FM APPROVED
EN54	EN54

Overview

System power supplies consist of two assemblies, a high efficiency switch mode power supply card and a power supply monitor module. The monitor module mounts to the local rail and distributes the power from its supply to the local rail. The local rail distributes power from all power supplies to other local rail modules and user interface cards resulting in “Shared Power” throughout the system. The 4-PPS/M can be configured as a primary power supply (PPS), booster power supply (BPS), or booster charger (BBC).

A 4-PPS/M configured as the PPS provides filtered, regulated power to the rail chassis modules as well as 24 VDC for operating ancillary equipment. The PPS consists of a power supply unit (PSU) mainboard and a monitor (MON) module.

Each booster power supply consists of the PSU mainboard and MON module. The booster power supply MON module provides the interface between the booster and the panel, making the required data and power connections to and from the rail chassis.

Maximum use of available power is achieved by configuring the power supplies in parallel. This results in a potential reduction in the number of power supplies necessary to meet requirements.

As many as four power supplies combined in a single enclosure provide up to 28 amps of available power. Battery backup is provided using one to four sets of batteries, depending on standby power requirements.

System power supplies mount to the back of the chassis units or wallboxes. Access to auxiliary power is via easily accessible terminal blocks located on the power supply monitor module. Each power supply produces 7 Amps of filtered and regulated power.

With four power supplies located in an enclosure (one primary and three booster power supplies) 28 amps of current is available for local rail modules, control display modules and the eight auxiliary 3.5 amp power outputs (two per supply).

Standard Features

- High efficiency switch mode
- Increased power distribution efficiency - power supplies parallel allowing up to 28 amps in a single node
- Universal 120 to 240 VAC Operation
- 7 AMP filtered and regulated
- Two 3.5 AMP outputs
- Temperature compensated, dual rated battery charger
- Electronic power limiting
- Automatic load testing of batteries
- Fully approved to UL/ULC and EN54 standards

Application

The primary power supply provides the system with battery charging and voltage regulation. Software configures the charger to either 10-24 AH batteries or 30-65 AH batteries and controls the high/low charge rates. Batteries mounted in the same enclosure as the power supply, have their charge rate monitored and adjusted based on the local enclosure temperature, keeping charging rates within battery specification. For remote batteries a temperature probe is monitored in the remote battery cabinet and charge rates are adjusted automatically. Battery damage is unlikely to occur when environmental short term conditions are outside of normal operating ranges.

The 4-PPS power supplies automatically load test batteries by shutting down the battery charger and placing a load across the battery. If the battery voltage is outside the specification range the power supply reports a trouble. The trouble clears if the battery is able to recover and pass future load tests.

Battery leads are electronically short circuit protected. If a short occurs in the battery leads the charger automatically disables itself and causes a trouble. The system will constantly look to see if the short has cleared. If the short clears, the system automatically restores.

During operation on standby batteries, battery voltage is constantly monitored. A trouble is reported if the battery voltage falls below a specified value.

4-PPS power supplies provide specific information back to the CPU designed to help speed trouble shooting of system functions. Should a power supply detect a fault, specific diagnostic codes are available to speed trouble shooting. The LCD will display the power supplies address, a specific trouble code, and a text message describing the specific trouble. Text messages are easy to understand and include items like: Battery Trouble, Aux Power Overload Circuit 1, Aux Power Overload Circuit 2.

Engineering Specification

The fire alarm power supplies must be capable of being paralleled and to load share. Multiple power supplies must be capable of being backed up with a single 24 volt battery set. Each power supply shall be capable of charging up to 65 AH batteries. The power supply must be able to perform an automatic load test of batteries and return a trouble if the batteries fall outside a predetermined range. Power supplies must incorporate the ability to adjust the charge rate of batteries based on ambient temperatures. It shall be possible to adjust for ambient temperature changes in local cabinets as well as remote cabinets.

Installation and Mounting

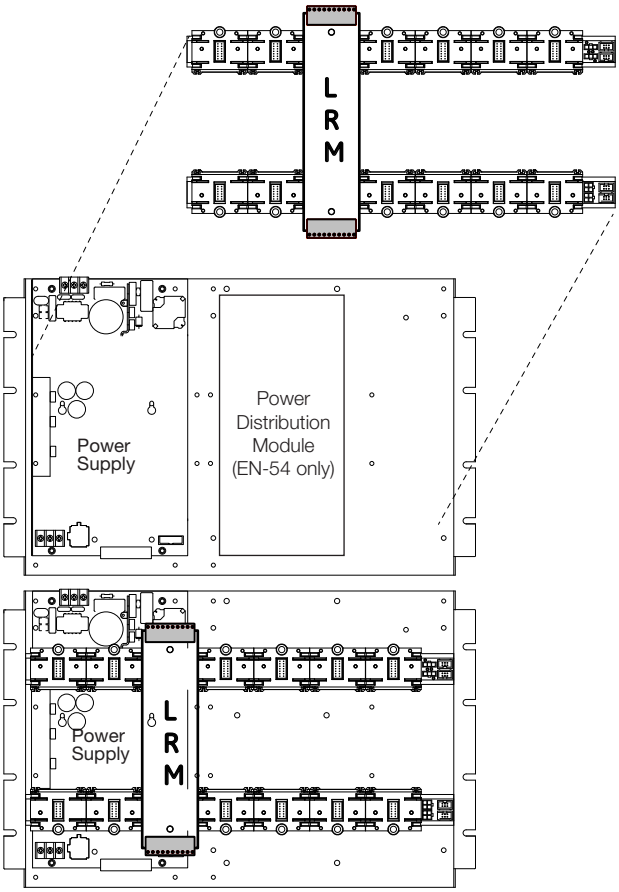

Power Supply Rules

1. **<u>Equipment damage</u>: Do not install the 4-PPS/M in the same cabinet as a 3-PPS/M, 3-BPS/M, or 3-BBC/M. Combining the 4-PPS/M with legacy power supplies will cause damage to the power supply.**
2. Each battery set needs one charger.
3. Each power supply must be connected to a battery set using an identical length and gauge of wire to keep voltage drops identical.
4. Distribute power supplies and loads evenly across rails.
5. **All battery sets for a panel must be the same capacity (AH), same manufacturer, and same manufacturing date code.**

The Table below illustrates the combinations of power supplies and batteries that meet all the power supply rules.

24 VDC Power Supply Output Current

	7A	14A	21A	28A
Battery Requirements	One Set, 65 AH max	Two Identical Sets, 65 AH max	Three Identical Sets, 65 AH max	Four Identical Sets, 65 AH max
Required 4-PPS/M Modules	1	2	3	4

Typical Wiring

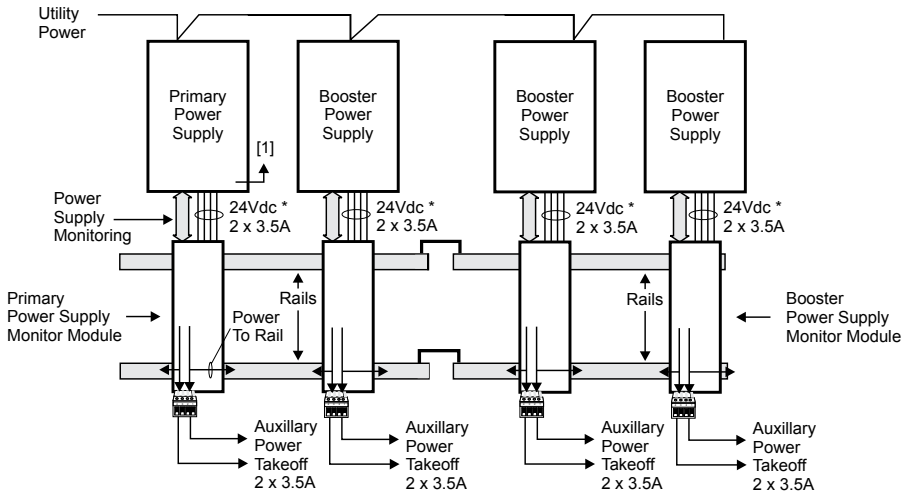

[1] From battery temperature probe terminals.

* Nominal Voltage

Specifications

Catalog Number	4-PPS/M and 4-PPS-M-E
Agency Approvals	UL, ULC, CE, EN54
Input Voltage	4-PPS-M: 120-240 Vac (+10%, -15%), 50-60 Hz 4-PPS-M-E: 120-230 VAC, +10%, –15%, 3.0 A, 50 to 60 Hz
Brownout Level	< or = 99 Vac
Current Requirements	PPS Included with CPU current requirements BPS/BBC Alarm: 45mA; Standby: 45mA
Input Current	3.0 A
Total Output	Special applications Total Internal DC Auxiliary DC*
Battery Charging Capacity	65 AH Sealed Lead-Acid
Low Battery Trouble	22.5 Vdc
Deep Discharge Cutoff	19.5 Vdc
Mounting Requirements	1 LRM space, 1 chassis footprint
Wire size (TB1 and TB3)	12 AWG to 20 AWG (4.0 mm^2 to 0.75 mm^2)
Output Protection	Electronic power limiting & heat sink temperature
Ground Fault Detection	< 10K Ohms

*Regulated applications Total Auxiliary DC 24 VDC at 7.0 A (internal and auxiliary outputs) 24 VDC at 7.0 A max. Two 24 VDC at 3.5 A max. Power-limited and supervised for ground faults and shorts For special applications, see the panel compatibility list. 24 VDC at 4.5 A (internal and auxiliary outputs) Two: One 24 VDC at 3.5 A maximum for all circuits except the regulated NAC; one 24 VDC at 1.0 A max. for regulated NACs to 3-IDC8/4 modules only Power-limited and supervised for ground faults and shorts

CALIFORNIA DEPARTMENT OF FORESTRY & FIRE PROTECTION
OFFICE OF THE STATE FIRE MARSHAL
FIRE ENGINEERING & INVESTIGATIONS DIVISION
BUILDING MATERIALS LISTING PROGRAM

LISTING SERVICE

LISTING No.:	7300-1657:0519
CATEGORY:	7300 - FIRE ALARM CONTROL UNIT ACCESSORIES/MISC. DEVICES
LISTEE:	EDWARDS, A Division of UTC Fire & Security Americas Corporation, Inc. 8985 Town Center Parkway, Bradenton, FL, 34202 Contact: Rodgers, Teresa 941-739-4225 Email: teresa.rodgers@carrier.com
DESIGN:	Models 4-PPS/M Power Supply and 4-PSMON Monitor Card. Model 4-PPS/M provides the required power and related supervision functions for the control panel and can be configured as a primary power supply (PPS), booster power supply (BPS), or booster charger (BBC). Model 4-PSMON is a power supply monitoring card that is connected to Model 4-PPS/M via wire harnesses. Intended for indoor dry locations only. Refer to listee's data sheet for additional detailed product description and operational considerations.
RATING:	Primary Operating Supply: 120/240 VAC, 50/60 Hz, 3A Secondary Operating Supply: 24 VDC, up to 65Ah
INSTALLATION:	In accordance with listee's printed installation instructions, NFPA 70, NFPA 72, applicable codes and ordinances, and in a manner acceptable to the authority having jurisdiction.
MARKING:	Listee's name, model number, electrical rating, and UL label.
APPROVAL:	Listed as fire alarm control unit accessories for use with listee's separately listed compatible fire alarm control units. Refer to listee's Installation Instruction Manual for details. Compatible Fire Alarm Control Units: Models EST3, EST3R, EST3-230, EST200, EST200R, EST200-2, and EST200R-2 (CSFM Listing No. 7165-1657:0186) and Model EST4 (CSFM Listing No. 7170-1657:0508)
NOTES:	

2-7-22 VWW

CALIFORNIA DEPARTMENT OF FORESTRY & FIRE PROTECTION
OFFICE OF THE STATE FIRE MARSHAL
FIRE ENGINEERING & INVESTIGATIONS DIVISION
BUILDING MATERIALS LISTING PROGRAM

LISTING SERVICE

This listing is based upon technical data submitted by the applicant. OSFM Fire Engineering staff has reviewed the test results and/or other data but does not make an independent verification of any claims. This listing is not an endorsement or recommendation of the item listed. This listing should not be used to verify correct operational requirements or installation criteria. Refer to listee's data sheet, installation instructions and/or other suitable information sources.

Date Issued: 05/21/2025

Listing Expires: 06/30/2026

Authorized By: **Michael Huang**, Program Coordinator
Fire Engineering & Investigations Division

EDWARDS

LIFE SAFETY & INCIDENT MANAGEMENT

Remote Booster Power Supplies

BPS6A, BPS10A

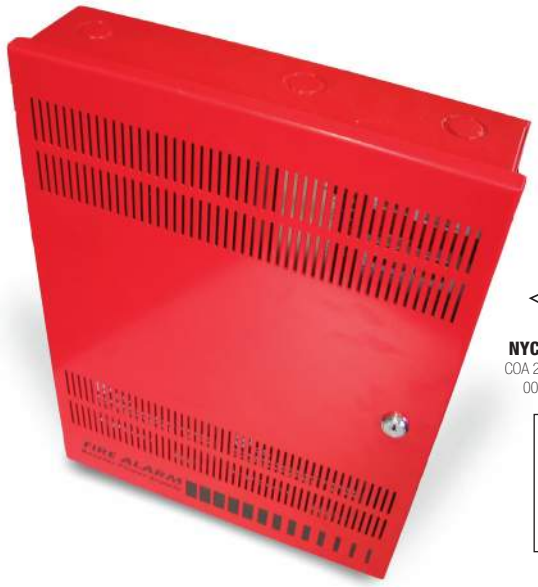

FM APPROVED

NYC Fire Dept.
COA 2022-TMCOAP-005856-RENL

S3424

7300-1657:
0229

Overview

The Booster Power Supply (BPS) is a UL 864, 10th-Edition-listed power supply. It is a 24-Vdc filtered-regulated and supervised unit that can easily be configured to provide additional notification appliance circuits (NACs) or auxiliary power for Mass Notification/ Emergency Communication (MNEC), as well as life safety applications.

The BPS contains the circuitry to monitor and charge internal or external batteries. Its steel enclosure has room for up to two 10 ampere-hour batteries. The BPS has four Class B (convertible to two Class A) NACs. These can be activated in one or two groups from the BPS's unique dual-input circuits.

The BPS is available in 6.5 or 10 ampere models. Each output circuit has a capacity of three amperes; total current draw cannot exceed the unit's rating.

The BPS meets current UL requirements and is listed under the following standards:

Standard (CCN)	Description
UL864 10th-Edition (UOXX)	Fire Alarm Systems
UL636 (ANET, UEHX7)	Holdup Alarm Units and Systems
UL609 (AOTX, AOTX7)	Local Burglar Alarm Units and Systems
UL365 (APAW, APAW7)	Police Station Connected Burglar Alarm Units and Systems
UL1076 (APOU, APOU7)	Proprietary Burglar Alarm System Units
UL1610 (AMCX)	Central Station Alarm Unit
ULC-S527 (UOXXC)	Control Units, Fire Alarm (Canada)
ULC-S303 (AOTX7)	Local Burglar Alarm Units and Systems (Canada)
C22.2 No. 205	Signaling Equipment (Canada)

Standard Features

- Allows for reliable filtered and regulated power to be installed where needed
- Cost-effective system expansion
- Provides for Genesis and Enhanced Integrity notification appliance synchronization
- Supports coded output operation
- Self-restoring overcurrent protection
- Multiple signal rates
- Can be cascaded or controlled independently
- Easy field configuration
- On-board diagnostic LEDs identify wiring or internal faults
- Standard EDWARDS keyed lockable steel cabinet with removable door
- 110 and 230 Vac models available
- Accommodates 18 to 12 AWG wire sizes
- Optional tamper switch
- Dual-battery charging rates
- Optional earthquake hardening: OSHPD seismic pre-approval for component Importance Factor 1.5

Application

The BPS provides additional power and circuits for notification appliances and other 24-Vdc loads. It is listed for indoor dry locations and can easily be installed where needed.

Fault conditions are indicated on the on-board diagnostic LEDs, opening the BPS input sense circuit and the trouble relay (if programmed). While this provides indication to the host system, the BPS can still be activated upon command. A separate AC Fail contact is available on the BPS circuit board, which can be programmed for trouble or AC Fail. There are seven on-board diagnostic LEDs: one for each NAC fault, one for battery fault, one for ground fault, and one for AC power.

The unique dual-input activation circuits of the BPS can be activated by any voltage from 6 to 45 Vdc (filtered-regulated) or 11 to 33 Vdc (full-wave rectified, unfiltered). The first input circuit can be configured to activate 1-4 of the four possible outputs. The second input circuit can be configured to control circuits 3 and 4. When outputs are configured for auxiliary operation, these circuits can be configured to stay on or automatically deactivate 30 seconds after AC power is lost. This feature makes these circuits ideal for door holder applications. The BPS also has a separate 200 mA 24 Vdc output that can be used to power internal activation modules.

BPS NACs can be configured for a 3-3-3 temporal or continuous output. This makes the BPS ideal for applications requiring signaling rates that are not available from the main system.

In addition to the internally generated signal rates, the BPS can also be configured to follow the coded signal rate of the main system NACs. This allows for the seamless expansion of existing NACs.

The BPS enclosure has mounting brackets for up to three Signature modules to the right of the circuit board.

Engineering Specification

Supply, where needed, EDWARDS BPS Series Booster Power Supplies (BPS) that are interconnected to and supervised by the main system. The BPS shall function as a stand-alone auxiliary power supply with its own fully-supervised battery complement. The BPS battery complement shall be sized to match the requirements of the main system. The BPS shall be capable of supervising and charging batteries having the capacity of 65 ampere-hours for Mass Notification/Emergency Communication (MNEC) life safety applications.

<<The BPS shall be capable of installation for a seismic component Importance Factor of 1.5.>> The BPS shall provide a minimum of four independent, fully supervised Class B circuits that can be field-configurable for notification appliance circuits or auxiliary 24-Vdc power circuits. BPS NACs shall be convertible to a minimum of two Class A NACs. Each BPS output circuit shall be rated at 3 amperes at 24 Vdc. Each output circuit shall be provided with automatically restoring overcurrent protection. The BPS shall be operable from the main system NAC and/or EDWARDS Signature Series control modules. BPS NACs shall be configurable for continuous or 3-3-3 temporal rate. Fault conditions on the BPS shall not impede operation of main system NAC. The BPS shall be provided with ground fault detection circuitry and a separate AC fail relay.

Dimensions

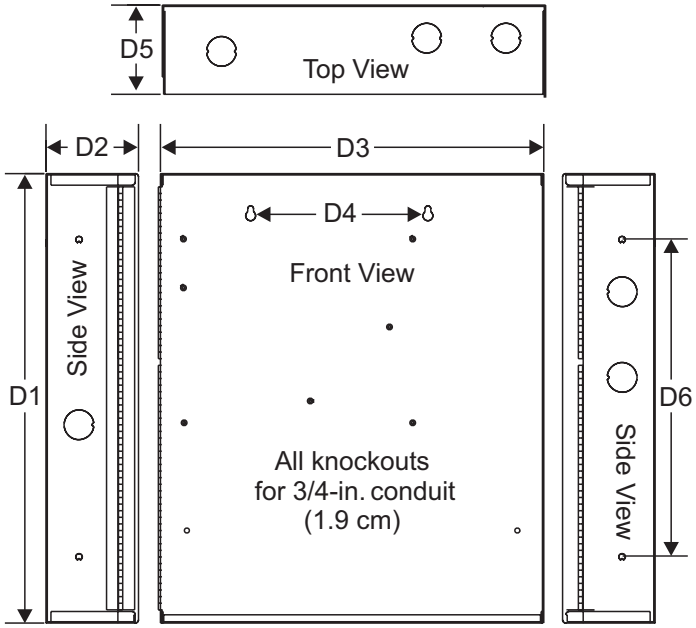

D1	D2	D3	D4	D5	D6
17.0 in (43.2 cm)	3.5 in (8.9 cm)	13.0 in (33.0 cm)	6.5 in (16.5 cm)	3.375 in (8.6 cm)	12.0 in (30.4 cm)

Wire routing

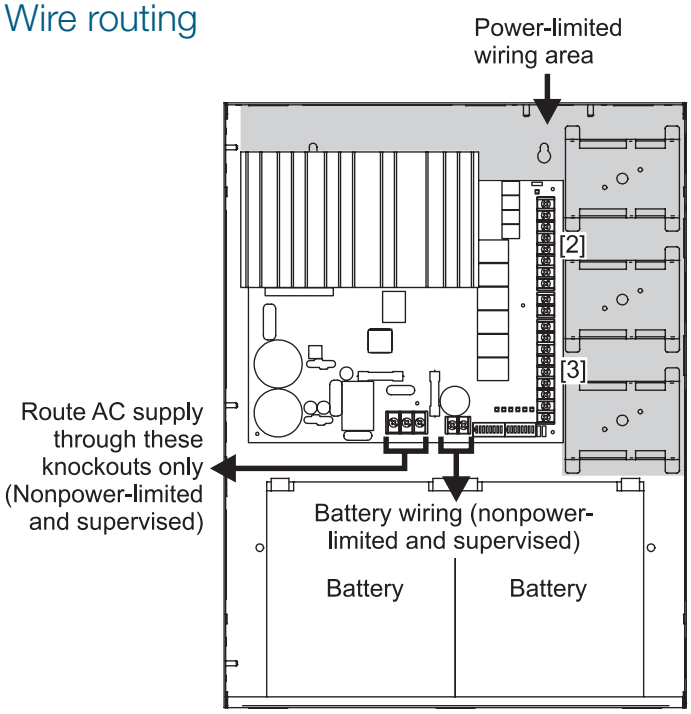

Notes

1. Maintain 1/4-inch (6 mm) spacing between power-limited and nonpower-limited wiring or use type FPL, FPLR, or FPLP cable per NEC.

[2] Power-limited and supervised when not configured as auxiliary power. Non-supervised when configured as auxiliary power.

[3] Source must be power-limited. Source determines supervision.

4. When using larger batteries, make sure to position the battery terminals towards the door.

Typical Wiring

Single or cascaded booster anywhere on a notification appliance circuit

Existing NAC end-of-line resistors are not required to be installed at the booster's terminals. This allows multiple boosters to be driven from a single NAC circuit without the need for special configurations.

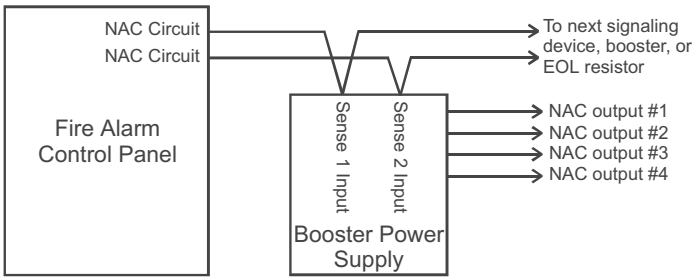

Multiple CC1(S) modules using the BPS's Sense inputs

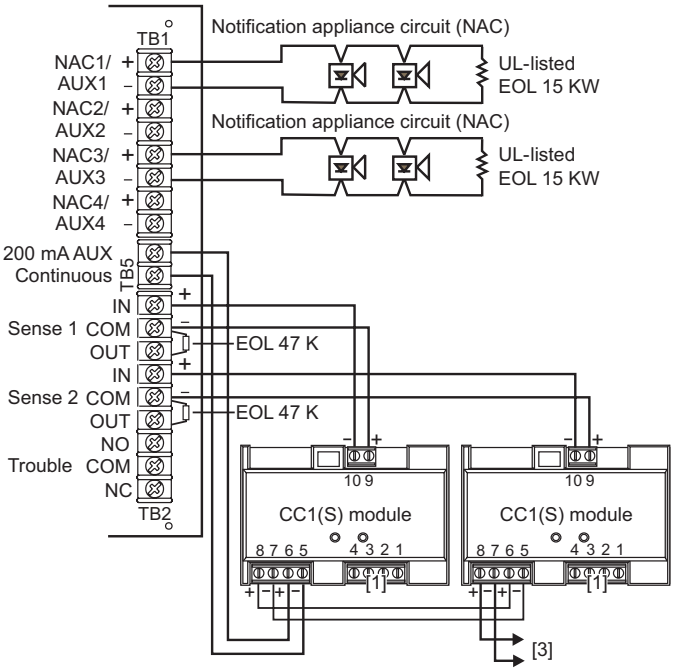

Configuring the Booster for AC Power Fail delay operation*

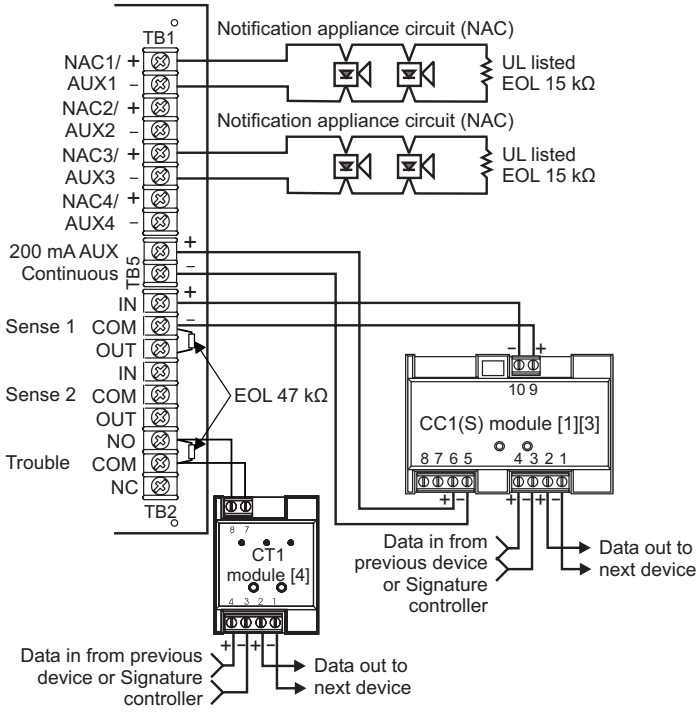

*The Booster supports AC Power fail delay of three hours via its trouble contact when dip switch SW2-6 is on. All other troubles are reported to supervising module or panel without delay via Sense inputs.

Trouble relay wiring with four AUX circuits

For providing AUX power only, set DIP switch SW2-6 to OFF, connect the auxiliary device as shown and monitor the trouble relay for immediate signal for all troubles. If AC power loss is required to be monitored separately, set DIP switch SW2-6 to ON, use a SIGA-CT2 module to monitor the Sense 1 trouble contacts for all troubles except AC power loss and the trouble relay for AC power loss after a 30-second delay.

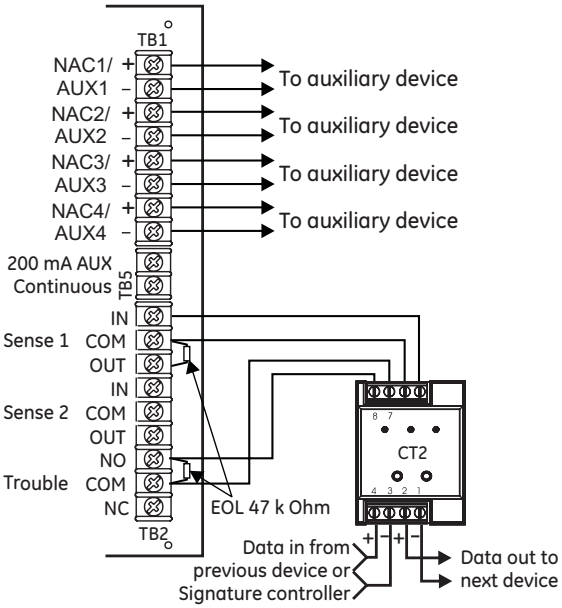

LIFE SAFETY & INCIDENT MANAGEMENT

Contact us

Phone: 800-655-4497 (Option 4)
Email: edwards.fire@carrier.com
Website: edwardsfiresafety.com

8985 Town Center Pkwy
Bradenton, FL 34202

© 2024 Carrier.
All rights reserved.

Specifications

Model	6.5-amp Booster	10-amp Booster
AC Line Voltage	120VAC or 220-240VAC 50/60Hz 390 watts	120VAC or 220-240VAC 50/60Hz 580 watts
Notification Appliance Circuit Ratings	3.0A max. per circuit @ 24Vdc nominal 6.5A max total all NACs	3.0A max. per circuit @ 24Vdc nominal 10A max total all NACs
Trouble Relay	2 Amps @ 30Vdc	
Auxiliary Outputs	Four configurable outputs replace NACs 1, 2, 3 or 4 as auxiliary outputs and 200 mA dedicated auxiliary	
Input Current (from an existing NAC)	3mA @ 12Vdc, 6mA @ 24Vdc	
Booster Internal Supervisory Current	70mA + 35 mA for each circuit set to AUX	
Booster Internal Alarm Current	270mA	
Signature Mounting Space	Accommodates three two-gang modules.	
Maximum Battery Size [1]	10 Amp Hours (2 of 12V10A) in cabinet; up to 65 Amp hours with external battery cabinet for fire applications.	
Terminal Wire Gauge	18-12 AWG	
Relative Humidity	0 to 93% non condensing @ 32°C	
Temperature Rating	32° to 120°F (0° to 49°C)	
NAC Wiring Styles	Class A or Class B	
Output Signal Rates	Continuous, 3-3-3 temporal, or follow installed panel's NAC.	
Ground Fault Detection	Enable or Disable via jumper	
Agency Listings	UL, ULC, CSFM, NYC Fire Dept., FM	

[1] For FM listing, maximum battery size is 24 Ah (12V24A or equivalent)

Ordering Information

Catalog Number	Description	Shipping Wt. lb (kg)
BPS6A	6.5-Amp Booster Power Supply	13 (5.9)
BPS6AC	6.5-Amp Booster Power Supply (ULC)	13 (5.9)
BPS6A/230	6.5-Amp Booster Power Supply (220V)	13 (5.9)
BPS10A	10-Amp Booster Power Supply	13 (5.9)
BPS10AC	10-Amp Booster Power Supply (ULC)	13 (5.9)
BPS10A/230	10-Amp Booster Power Supply (220V)	13 (5.9)

Related Equipment		
12V6A5	7.2-Amp Hour Battery, two required	3.4 (1.6)
12V10A	10-Amp Hour Battery, two required	9.5 (4.3)
3-TAMP	Tamper switch	
BPS-CVR	Electronics Protective Cover	
BC-1EQ	Seismic Kit for BC-1. Order BC-1 separately (see note 2)	
BPSEQ	Seismic Kit for BPS6A or BPS10 Booster Power Supplies (see note 2)	
BC-1	Battery Cabinet (up to 2 - 40 Amp Hour Batteries)	58 (26.4)
BC-2	Battery Cabinet (up to 2 - 17 Amp Hour Batteries)	19 (8.6)
12V17A	18-Amp Hour Battery, two required (see note 1)	13 (5.9)
12V24A	24-Amp Hour Battery, two required (see note 1)	20 (9.07)
12V40A	40-Amp Hour Battery, two required (see note 1)	32 (14.5)
12V50A	50-Amp Hour Battery, two required (see note 1)	40 (18.14)
12V65A	65-Amp Hour Battery, two required (see note 1)	49 (22.2)

Notes
1. Requires installation of separate battery cabinet.
2. For earthquake anchorage, including detailed mounting weights and center of gravity detail, refer to Seismic Application Guide 3101676. Approval of panel anchorage to site structure may require local AHJ, structural or civil engineer review.

CALIFORNIA DEPARTMENT OF FORESTRY & FIRE PROTECTION
OFFICE OF THE STATE FIRE MARSHAL
FIRE ENGINEERING & INVESTIGATIONS DIVISION
BUILDING MATERIALS LISTING PROGRAM

LISTING SERVICE

LISTING No.:	7300-1657:0229
CATEGORY:	7300 - FIRE ALARM CONTROL UNIT ACCESSORIES/MISC. DEVICES
LISTEE:	EDWARDS, A Division of UTC Fire & Security Americas Corporation, Inc. 8985 Town Center Parkway, Bradenton, FL, 34202 Contact: Rodgers, Teresa 941-739-4225 Email: teresa.rodgers@carrier.com
DESIGN:	Models BPS6A, BPS10A, BPS6A/230, BPS10A/230, BPS6CAA, and BPS10CAA remote booster power supplies. Models APS6A, APS6A/230, APS6CAA, APS10A, and APS10A/230 Auxiliary Power Supply. *Models BPSEQ and APSEQ Seismic Kits. Refer to listee's data sheet for detailed product description and operational considerations.
RATING:	120 V/240 V, 60 Hz, 50 Hz
INSTALLATION:	In accordance with listee's printed installation instruction, applicable codes and ordinances and in a manner acceptable to the authority having jurisdiction.
MARKING:	Listee's name, model number, rating, and UL label.
APPROVAL:	Listed as remote booster power supplies for use with listee's separately listed compatible fire alarm control units to extend the notification appliance circuit. Refer to listee's Installation Instruction Manual for details.
NOTES:	Formerly 7300-1591:229

*Rev 07-23-19 gt

This listing is based upon technical data submitted by the applicant. OSFM Fire Engineering staff has reviewed the test results and/or other data but does not make an independent verification of any claims. This listing is not an endorsement or recommendation of the item listed. This listing should not be used to verify correct operational requirements or installation criteria. Refer to listee's data sheet, installation instructions and/or other suitable information sources.

CALIFORNIA DEPARTMENT OF FORESTRY & FIRE PROTECTION
OFFICE OF THE STATE FIRE MARSHAL
FIRE ENGINEERING & INVESTIGATIONS DIVISION
BUILDING MATERIALS LISTING PROGRAM

LISTING SERVICE

Date Issued: 05/22/2025 **Listing Expires: 06/30/2026**

Authorized By: **Michael Huang**, Program Coordinator
Fire Engineering & Investigations Division

FAD/SRD ACE-11

Document Boxes

Store important system documents in a secure location with a cabinet built specifically to meet the requirements of NFPA72 7.7.2.1, NFPA72 7.7.2.3, NFPA72 7.7.2.5, and NFPA72 23.2.2.1.

Select models include our innovative 8GB flash drive slide tab that allows the user to select a USB-C or Micro USB connector to access records electronically per NFPA72 7.5.6.7.1 and NFPA72 7.5.6.7.2.

FEATURES

- 18 gauge cold rolled steel construction with red or black powder coat and white lettering
- Dimensions are 12” wide x 13” tall and 3” deep
- Liftaway hinge
- Removable document holder with two key ring hooks and business card bracket
- Slide tab allows user to select USB-C or Micro USB connector to download from 8GB digital flash memory

SPECIFICATIONS

The FAD and SRD Documents Box shall be UL Listed, constructed of 18 gauge cold rolled steel. It shall have a powder coat finish. The cover shall be permanently screened with 1” high lettering “FIRE ALARM DOCUMENTS” or “SYSTEM RECORD DOCUMENTS” with white indelible ink. The access door shall be locked with a 3/4” barrel lock and there will be a liftaway hinge. Models with digital storage will have a minimum of 8 gigabyte digital flash memory drive with a slide tab that allows user to select USB-C or Micro USB connector for uploading and downloading information. The enclosure will supply 4 mounting holes. Inside will accommodate standard 8 1/2” x 11” manuals, three-ring binders, and document records. The enclosure shall also provide 2 key ring holders with a location to mount standard business cards for key contact personnel.

CUSTOM BRANDING AVAILABLE

DIMENSIONS

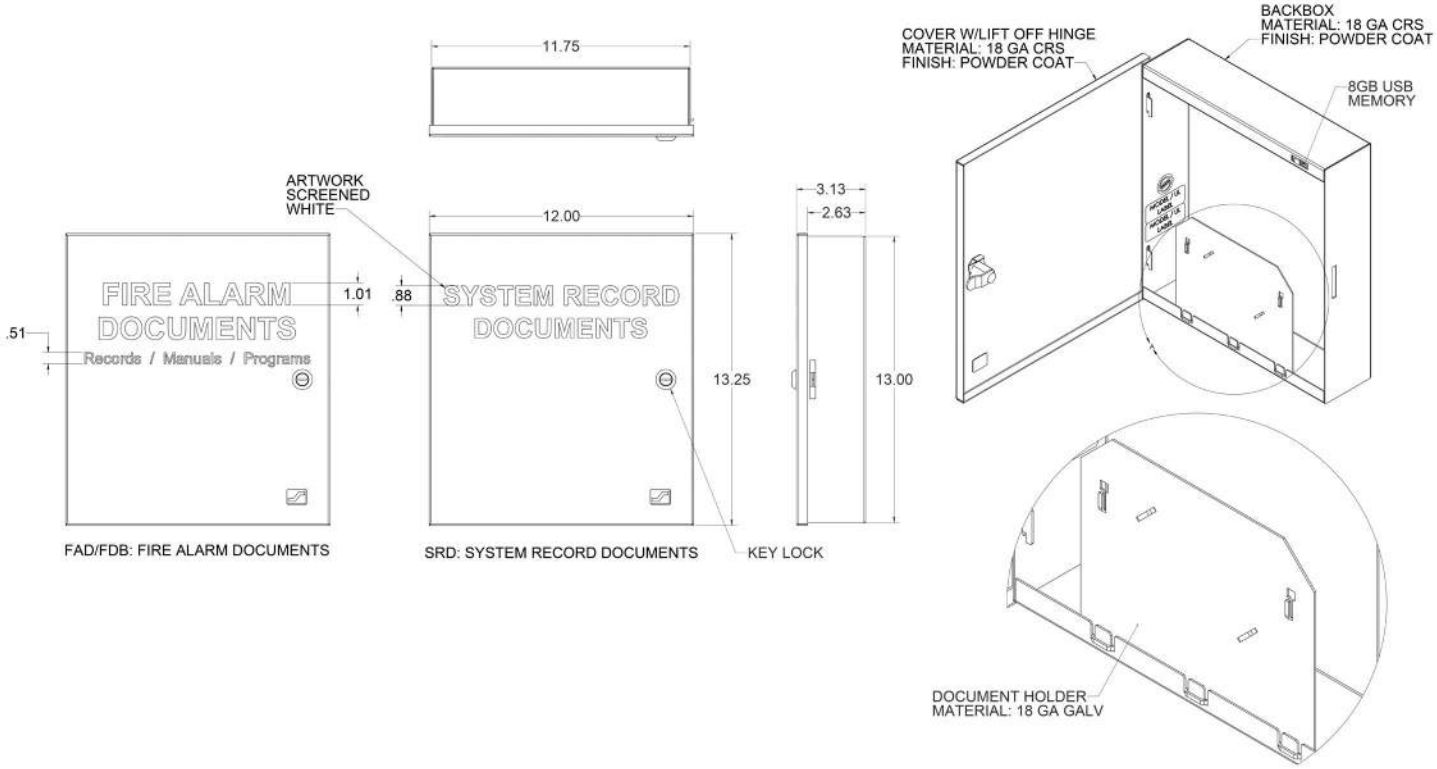

ORDERING INFORMATION

P/N#	Cover Text	Color	Custom Screening	USB Storage
SSU00672	Fire Alarm Documents	Red	No	No
SSU00673	Fire Alarm Documents	Red	Yes	No
SSU00685	Fire Alarm Documents	Red	No	Yes
SSU00686	Fire Alarm Documents	Red	Yes	Yes
SSU00689	System Record Documents	Red	No	Yes
SSU00690	System Record Documents	Red	Yes	Yes
SSU01672C	Fire Alarm Documents	Black	Yes	No
SSU01689	System Record Documents	Black	No	Yes
SSU01690	System Record Documents	Black	Yes	Yes

© Copyright 2024 Space Age Electronics, Inc. | This document subject to change without notice | LT10641 | Rev. I

CALIFORNIA DEPARTMENT OF FORESTRY & FIRE PROTECTION
OFFICE OF THE STATE FIRE MARSHAL
FIRE ENGINEERING & INVESTIGATIONS DIVISION
BUILDING MATERIALS LISTING PROGRAM

LISTING SERVICE

LISTING No.:	7300-0553:0110
CATEGORY:	7300 - FIRE ALARM CONTROL UNIT ACCESSORIES/MISC. DEVICES
LISTEE:	SPACE AGE ELECTRONICS 58 Chockett Road, Sterling, MA, 01564 Contact: Scholl, Robert (508) 485-0966 (508) 485-4740 Email: bob.scholl@1sae.com
DESIGN:	Models TC2-32, TC1-18, TCX/A 64, TCX/D 128, ACE/A, AC2, ACE/D, IF-2, IF1, IFX/A and IFX/D enclosures. Models ACE-11, ACE-12 and ACE-13, *ACE2424, *ACE 3036, *ACE 2436, *ACE 3048 document cabinets. Refer to listee's data sheet for detailed product description and operational considerations.
RATING:	
INSTALLATION:	In accordance with listee's printed installation instructions, applicable codes and ordinances and in a manner acceptable to the authority having jurisdiction.
MARKING:	Listee's name, model number and UL label.
APPROVAL:	Listed as fire alarm equipment enclosures and document cabinets for use with listee's fire alarm equipment. Refer to listee's Installation Instruction Manual for details.
NOTES:	

02-09-16 dc

This listing is based upon technical data submitted by the applicant. OSFM Fire Engineering staff has reviewed the test results and/or other data but does not make an independent verification of any claims. This listing is not an endorsement or recommendation of the item listed. This listing should not be used to verify correct operational requirements or installation criteria. Refer to listee's data sheet, installation instructions and/or other suitable information sources.

Date Issued: 04/10/2024

Listing Expires: 06/30/2025

Authorized By: **Michael Huang**, Program Coordinator
Fire Engineering & Investigations Division

DTK-120SLR

Series Connected Surge Protective Device

DITEK's DTK-120SLR protects dedicated 120VAC power circuits that feed control panels and other critical equipment. The series-wired design provides maximum critical load protection, and disconnects power to the connected equipment if compromised. EMI/RFI filtering ensures clean power for connected equipment.

Product Features

- Series-wired design for fast response and superior level of protection
- Disconnects power to connected equipment if compromised
- Compact design fits a variety of control panels
- UL1283 EMI/RFI filtering
- Diagnostic LEDs provide positive indication of system power and SPD function

Applications

- Fire Alarm Panels
- Gate Operators
- Industrial Control Panels
- 120VAC Single Phase Critical Loads

Accessories

- DIN Rail Mounting Kit, p/n DTK-DRK

Technical Specifications	
Voltage Configuration:	120VAC Single Φ (2W + G)
MCOV:	150V
Protection Modes:	L-N, L-G, N-G
Voltage Protection Rating:	600V L-G, L-N 1200V N-G
Surge Current Rating:	50,000A
Max Continuous Current:	20A
SCCR:	10,000A
Nominal Discharge Current Rating (In):	10kA
Operating Frequency:	50/60Hz
EMI/RFI Filtering Attenuation:	Up to 35dB, 100kHz – 100MHz

Mechanical Specifications	
Connection Method:	Mechanical lugs, 12 AWG max ½" NPT pre-drilled holes In/Out
Housing:	ABS
Operating Temperature:	32°F – 104°F (0°C – 40°C)
Maximum Humidity:	95% non-condensing
Dimensions:	6.50" L x 5.25" W x 2.25" H (165 mm x 133 mm x 57 mm)
Weight:	15.5 oz (0.44 kg)

Quality Standards & Approvals	
Certifications:	UL1449 5th Edition, UL1283 CSA C22.2 No. 269.2-17
SPD Type:	Type 2
Warranty:	10 Year Limited Warranty

Every precaution has been taken to ensure that this literature is accurate and complete. DITEK Corporation assumes no responsibility and disclaims all liability for damages resulting from the use of this information or for any errors or omissions.

CALIFORNIA DEPARTMENT OF FORESTRY & FIRE PROTECTION
OFFICE OF THE STATE FIRE MARSHAL
FIRE ENGINEERING & INVESTIGATIONS DIVISION
BUILDING MATERIALS LISTING PROGRAM

LISTING SERVICE

LISTING No.:	4945-2105:0105
CATEGORY:	4945 - CIRCUIT PROTECTORS/SURGE PROTECTIVE DEVICES
LISTEE:	DITEK Corporation 1720 Starkey Road, Largo, FL, 33771 Contact: Messinger, Lisa (800) 753-2345 (727) 812-5001 Email: lisa.messinger@ditekcorp.com
DESIGN:	Models DTK-120SR and DTK-120SRD Surge protective devices. Refer to listee's data sheet for additional detailed product description and operational considerations.
RATING:	50 0r 60 Hz not exceeding 1000V.
INSTALLATION:	In accordance with listee's printed installation instructions, applicable codes and ordinances and in a manner acceptable to the authority having jurisdiction.
MARKING:	Listee's name, model number, rating, and UL label.
APPROVAL:	Listed as a surge protective device. For indoor use only.
NOTES:	*FORMERLY: 7300-2105:0105

05-10-24 MH

*Revised

This listing is based upon technical data submitted by the applicant. OSFM Fire Engineering staff has reviewed the test results and/or other data but does not make an independent verification of any claims. This listing is not an endorsement or recommendation of the item listed. This listing should not be used to verify correct operational requirements or installation criteria. Refer to listee's data sheet, installation instructions and/or other suitable information sources.

Date Issued: 03/18/2024

Listing Expires: 06/30/2025

Authorized By: **Michael Huang**, Program Coordinator
Fire Engineering & Investigations Division

DTK-2MHLPF Series

Modular Low Voltage Surge Protectors

DITEK's DTK-2MHLPF Series of low voltage surge protectors provide robust protection in a compact package. This series was designed to remove load instead of shorting to ground. Convenient field-replaceable modules offer ease of installation, and the Snap-Track base system allows installers to protect multiple circuits while utilizing a common ground point.

DTK-2MHLP24F DTK-2MHLP24FWB

Product Features

- Protects (2) low voltage circuit pairs per module
- Hybrid design utilizing SAD and GDT technologies
- Opens circuit when compromised
- Field-replaceable modular design with single point ground for fast and easy installation
- Six voltage configurations available to protect various types of circuits
- Hardwired multi-base mounting system allows protection for up to (10) pairs with a common ground
- Suitable for use on both AC and DC low voltage circuits

Applications

- Fire Alarm Panel SLC, PIV and IDC Circuits
- Burglar Alarm Panel IDC Circuits
- Telco Dialer Circuits
- 4-20mA Current Loops

Accessories

- To order module with base, add "WB" to end of part number
- Test Module Kit, p/n DTK-2MHLPTM

Technical Specifications

DTK-2MHLP	5F	12F	24F	36F	48F	75F	130F
Service Voltage:	5V	12V	24V	36V	48V	75V	130V
MCOV:	6V	18V	33V	48V	64V	90V	140V
Clamping Voltage:	8V	21.6V	39V	57V	76V	108V	155V
Protection Modes:	Differential Mode (L-L) Common Mode (L-G)						
Surge Current Rating:	20,000A						
Maximum Continuous Current:	1 Amp						
Failure Mode:	Open Circuit						

Mechanical Specifications

Base Connection Method:	Hardwired terminals, 30-12 AWG	
Module Connection Method:	Edge card into mounting base	
Housing:	ABS	
Operating Temperature:	-40°F - 158°F (-40°C - 70°C)	
Maximum Humidity:	95% non-condensing	
Dimensions:	**Module** 2.1" L x 1.4" W x 1.9" H (53 mm x 36 mm x 48 mm)	**Module with Base** 3.25" L x 1.5" W x 2.6" H (83 mm x 38 mm x 66 mm)
Weight:	1.2 oz (34 g)	2.8 oz (79 g)

Quality Standards & Approvals

Certifications:	UL497B
Warranty:	10 Year Limited Warranty

Every precaution has been taken to ensure that this literature is accurate and complete. DITEK Corporation assumes no responsibility and disclaims all liability for damages resulting from the use of this information or for any errors or omissions.

Base Part Numbers and Dimensions

Part Number	# Pairs Protected	Dimensions
DTK-MB10	2	3.25” H x 1.50” W (82.5 mm x 38.1 mm)
DTK-2MB	4	3.25” H x 3.00” W (82.5 mm x 76.2 mm)
DTK-3MB	6	3.25” H x 4.50” W (82.5 mm x 114.3 mm)
DTK-4MB	8	3.25” H x 6.00” W (82.5 mm x 152.4 mm)
DTK-5MB	10	3.25” H x 7.50” W (82.5 mm x 190.5 mm)

DTK-MB10

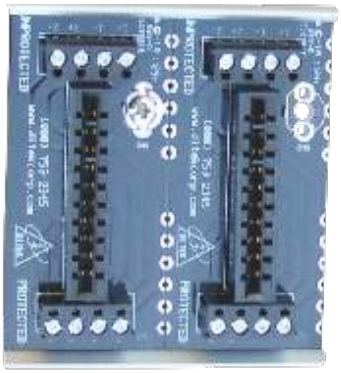

DTK-2MB

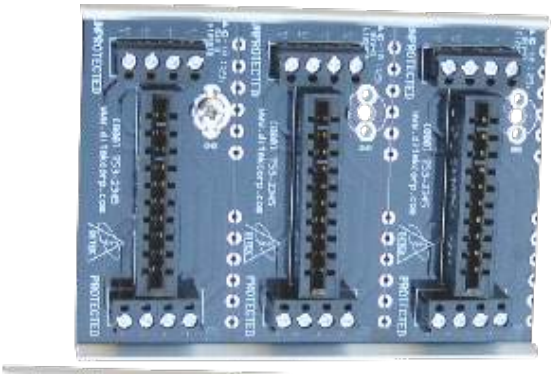

DTK-3MB

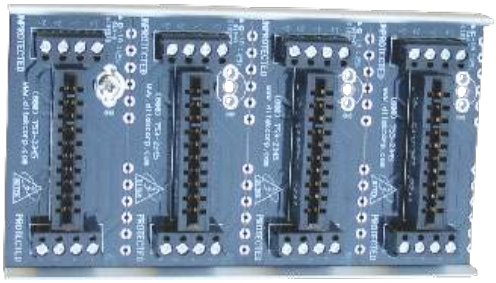

DTK-4MB

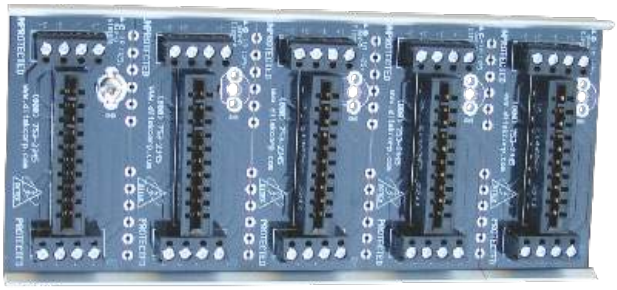

DTK-5MB

CALIFORNIA DEPARTMENT OF FORESTRY & FIRE PROTECTION
OFFICE OF THE STATE FIRE MARSHAL
FIRE ENGINEERING & INVESTIGATIONS DIVISION
BUILDING MATERIALS LISTING PROGRAM

LISTING SERVICE

LISTING No.:	4945-2105:0100
CATEGORY:	4945 - CIRCUIT PROTECTORS/SURGE PROTECTIVE DEVICES
LISTEE:	DITEK Corporation 1720 Starkey Road, Largo, FL, 33771 Contact: Molinari, Michael 8007532345 Email: michael.molinari@ditekcorp.com
DESIGN:	Models DTK-1P through -25P; DTK1LVLP through -4LVLP; DTK-1LVLP-F through -4VLP-F; DTK-2MHLP-05B-12B,-24B,-36B,48B-75B Isolated Loop circuit protectors. Models DTK-MB10,-2MB,-3MB,-4MB,-5MB,-MBV Protector bases. Refer to listee's data sheet for additional detailed product description and operational considerations.
RATING:	
INSTALLATION:	In accordance with listee's printed installation instructions, applicable codes and ordinances and in a manner acceptable to the authority having jurisdiction.
MARKING:	Listee's name, model number, rating, and UL label.
APPROVAL:	Listed as Isolated Loop circuit protectors and Protector bases. For indoor use only.
NOTES:	*FORMERLY: 7300-2105:0100

05-10-24 MH

*Revised

This listing is based upon technical data submitted by the applicant. OSFM Fire Engineering staff has reviewed the test results and/or other data but does not make an independent verification of any claims. This listing is not an endorsement or recommendation of the item listed. This listing should not be used to verify correct operational requirements or installation criteria. Refer to listee's data sheet, installation instructions and/or other suitable information sources.

Date Issued: 04/02/2025

Listing Expires: 06/30/2026

Authorized By: **Michael Huang**, Program Coordinator
Fire Engineering & Investigations Division

EDWARDS

LIFE SAFETY & INCIDENT MANAGEMENT

Manual Pull Stations

SIGA-270, SIGA-270P, SIGA-278

SIGA-270 SERIES

SIGA-278

Patented

MEA FM APPROVED 7150-1657: 0129 S2318

Overview

The SIGA-270 and SIGA-278 series Manual Pull Stations are part of EDWARDS's Signature Series system. The SIGA-270 Fire Alarm Manual Pull Stations feature our very familiar teardrop shape. They are made from die-cast zinc and finished with red epoxy powder-coat paint complemented by aluminum colored stripes and markings. With positive pull-lever operation, one pull on the station handle breaks the glass rod and turns in a positive alarm, ensuring protection plus fool-proof operation. Presignal models (SIGA-270P) are equipped with a general alarm (GA) keyswitch for applications where two stage operation is required. The up-front highly visible glass rod discourages tampering, but is not required for proper operation.

EDWARDS's double action single stage SIGA-278 station is a contemporary style manual station made from durable red colored lexan. To initiate an alarm, first lift the upper door marked "LIFT THEN PULL HANDLE", then pull the alarm handle.

Standard Features

Note: *Some features described here may not be supported by all control systems. Check your control panel's Installation and Operation Guide for details.*

- **Traditional familiar appearance**
  SIGA-270 models feature our familiar teardrop design with simple positive pull action and sturdy die-cast metal body.
- **One stage (GA), two stage (pre-signal), and double action models**
  SIGA-270 models are available for one or two stage alarm systems. The single stage double action SIGA-278 features a rugged Lexan housing with keyed reset mechanism.
- **Break glass operation**
  An up-front visible glass rod on the SIGA-270 discourages tampering.
- **Intelligent device with integral microprocessor**
  All decisions are made at the station allowing lower communication speed while substantially improving control panel response time. Less sensitive to line noise and loop wiring properties; twisted or shielded wire is not required.
- **ADA Compliant**
  Meets ADA requirements for manual pull stations.
- **Electronic Addressing with Non-volatile memory**
  Permanently stores programmable address, serial number, type of device, and job number. Automatically updates historic information including hours of operation, last maintenance date, number of alarms and troubles, and time and date of last alarm.
- **Automatic device mapping**
  Each station transmits wiring information to the loop controller regarding its location with respect to other devices on the circuit.
- **Diagnostic LEDs**
  Status LEDs; flashing GREEN shows normal polling; flashing RED shows alarm state.
- **Designed for high ambient temperature operation**
  Install in ambient temperatures up to 120 °F (49 °C).

Application

The operating characteristics of the fire alarm stations are determined by their sub-type code or "Personality Code". NORMALLY-OPEN ALARM - LATCHING (Pesonality Code 1**)** is assigned by the factory; no user configuration is required. The device is configured for Class B IDC operation. An ALARM signal is sent to the loop controller when the station's pull lever is operated. The alarm condition is latched at the station.

Compatibility

Signature Series manual stations are compatible only with EDWARDS's Signature Loop Controller.

Warnings & Cautions

This device will not operate without electrical power. As fires frequently cause power interruption, we suggest you discuss further safeguards with your local fire protection specialist.

Testing & Maintenance

To test (or reset) the station simply open the station and operate the exposed switch. The SIGA-270 series are opened with a tool; the SIGA-278 requires the key which is supplied with that station.

The station's automatic self-diagnosis identifies when it is defective and causes a trouble message. The user-friendly maintenance program shows the current state of each Signature series device and other pertinent messages. Single devices may be deactivated temporarily, from the control panel. Availability of maintenance features is dependent on the fire alarm system used.

Scheduled maintenance (Regular or Selected) for proper system operation should be planned to meet the requirements of the Authority Having Jurisdiction (AHJ). Refer to current NFPA 72 and ULC CAN/ULC 536 standards.

Typical Wiring

The fire alarm station's terminal block accepts #18 AWG (0.75mm^2) to #12 AWG (2.5mm^2) wire sizes. See Signature Loop Controller catalog sheet for detailed wiring requirement specifications.

Wiring Notes

1. Refer to Signature Loop Controller manual for maximum wire distance.
2. All wiring is power limited and supervised.

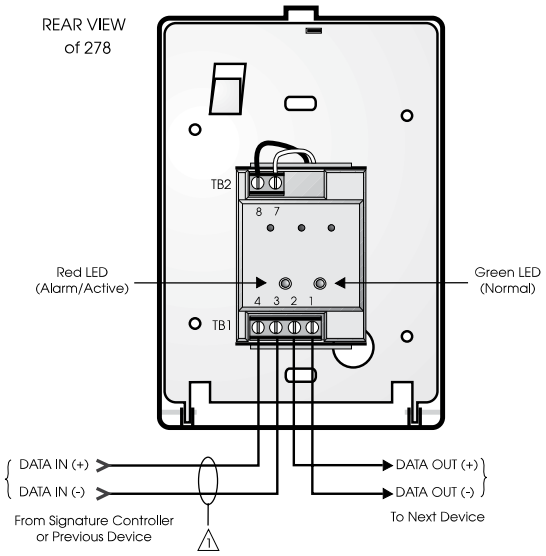

Figure 4. Single Stage Systems

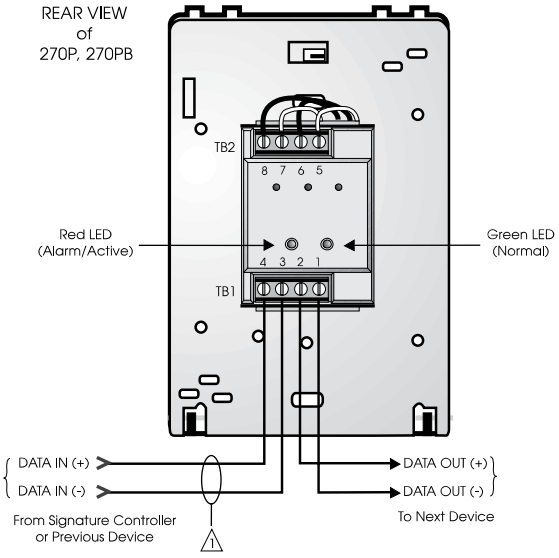

Figure 5. Two Stage Systems

Installation

Single-stage Signature Series fire alarm manual pull stations mount to North American 2½ inch (64 mm) deep 1-gang boxes.

Two stage presignal (270P) models require 1½ inch (38 mm) deep 4-inch square boxes with 1-gang, ½-inch raised covers. Openings must be angular. *Rounded openings are not acceptable.* Recommended box: Steel City Model 52-C-13; in Canada, use Iberville Model CI-52-C-49-1/2.

All models include terminals are suited for #12 to #18 AWG (2.5 mm^2 to 0.75 mm^2) wire size. EDWARDS recommends that these fire alarm stations be installed according to latest recognized edition of national and local fire alarm codes.

Electronic Addressing: The loop controller electronically addresses each manual station, saving valuable time during system commissioning. Setting complicated switches or dials is not required. Each station has its own unique serial number stored in its on-board memory. The loop controller identifies each device on the loop and assigns a "soft" address to each serial number. If desired, the stations can be addressed using the SIGA-PRO Signature Program/Service Tool.

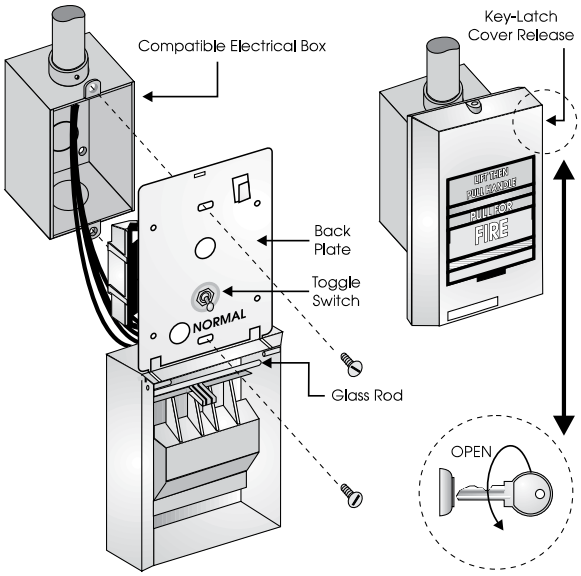

Figure 1. SIGA-278 installation

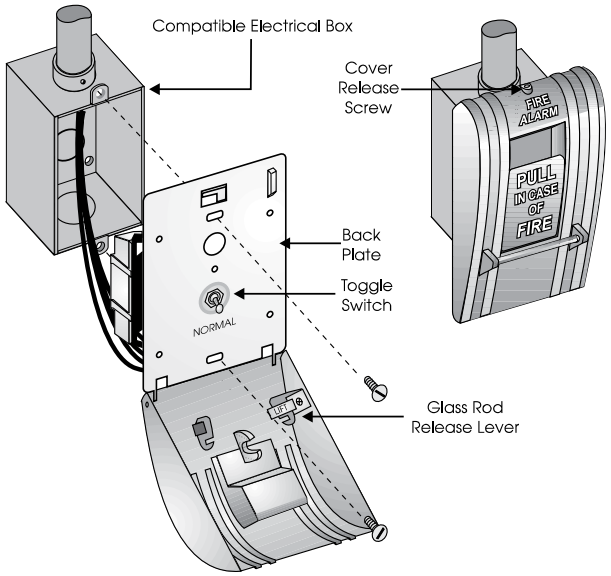

Figure 2. SIGA-270, SIGC-270F, SIGC-270B installation

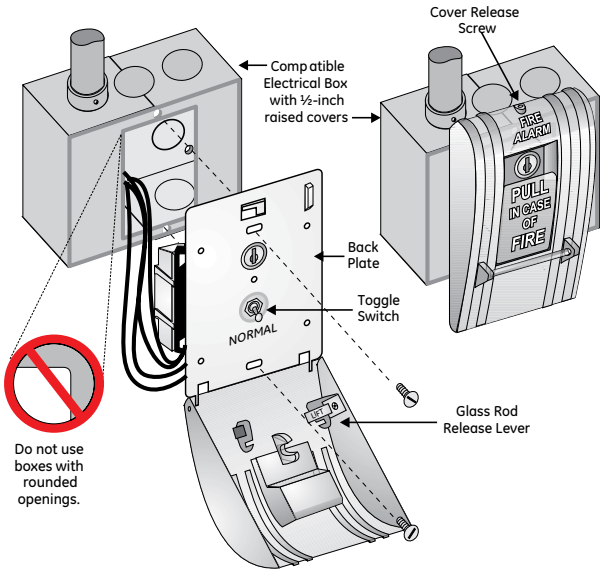

Figure 3. SIGA-270P, SIGC-270PB installation

LIFE SAFETY & INCIDENT MANAGEMENT

Contact us

Phone: 800-655-4497 (Option 4)
Email: edwards.fire@carrier.com
Website: edwardsfiresafety.com

8985 Town Center Pkwy
Bradenton, FL 34202

© 2020 Carrier
All rights reserved.

Specifications

Catalog Number	SIGA-270, SIGC-270F, SIGC-270B	SIGA-270P, SIGC-270PB	SIGA-278
Description	Single Action - One Stage	Single Action -Two Stage (Presignal)	Double Action - One Stage
Addressing Requirements	Uses 1 Module Address	Uses 2 Module Addresses	Uses 1 Module Address
Operating Current	Standby = 250µA Activated = 400µA	Standby = 396µA Activated = 680µA	Standby = 250µA Activated = 400µA
Construction & Finish	Diecast Zinc - Red Epoxy with aluminum markings		Lexan - Red with white markings
Type Code	Factory Set		
Operating Voltage	15.2 to 19.95 Vdc (19 Vdc nominal)		
Storage and Operating Environment	Operating Temperature: 32ºF to 120ºF (0ºC to 49ºC) Storage Temperature: -4ºF to 140ºF (-20ºC to 60ºC) Humidity: 0 to 93% RH		
LED Operation	On-board Green LED - Flashes when polled On-board Red LED - Flashes w hen in alarm		
Compatibility	Use With: Signature Loop Controller		
Agency Listings	UL, ULC (note 1), MEA, CSFM, FM		

Note: *SIGC-270F, SIGC-270B and SIGC-270PB are ULC listed only. Suffix "F" indicates French markings. Suffix "B" indicates English/French biling ual markings.*

Ordering Information

Catalog Number	Description	Ship Wt. lbs (kg)
SIGA-270	One Stage Fire Alarm Station, English Markings - UL/ULC Listed	1 (0.5)
SIGC-270F	One Stage Fire Alarm Station, French Markings - ULC Listed	
SIGC-270B	One Stage Fire Alarm Station, French/English Markings - ULC Listed	
SIGA-270P	Two Stage (Presignal) Fire Alarm Station, English Markings - UL/ULC Listed	
SIGC-270PB	Two Stage (Presignal) Fire Alarm Station, French/English Markings - ULC Listed	
SIGA-278	Double Action (One Stage) Fire Alarm Station, English Markings - UL/ULC Listed	

Accessories		
32997	GA Key w/Tag - for pre-signal station (CANADA ONLY)	0.1 (.05)
276-K2	GA Key - for pre-signal station (USA ONLY)	
276-K1	Station Reset Key, Supplied with all Key Reset Stations	
27165	12 Glass Rods - for SIGA-270 series (CANADA ONLY)	
270-GLR	20 Glass Rods - for SIGA-270 series (USA ONLY)	
276-GLR	20 Glass Rods - for SIGA-278 series	
276B-RSB	Surface Mount Box, Red - for SIGA pull stations	1 (0.6)

CALIFORNIA DEPARTMENT OF FORESTRY & FIRE PROTECTION
OFFICE OF THE STATE FIRE MARSHAL
FIRE ENGINEERING & INVESTIGATIONS DIVISION
BUILDING MATERIALS LISTING PROGRAM

LISTING SERVICE

LISTING No.:	7150-1657:0129
CATEGORY:	7150 - FIRE ALARM PULL BOXES
LISTEE:	EDWARDS, A Division of UTC Fire & Security Americas Corporation, Inc. 8985 Town Center Parkway, Bradenton, FL, 34202 Contact: Rodgers, Teresa 941-739-4225 Email: teresa.rodgers@carrier.com
DESIGN:	Models SIGA-270, SIGA-270P, and SIGA-278 noncoded, intelligent manual pull stations*. Unit consists of a listed pull station and a remote transponder. Refer to listee's data sheet for additional detailed product description and operational considerations.
RATING:	
INSTALLATION:	In accordance with listee's printed installation instructions, applicable codes and ordinances and in a manner acceptable to the authority having jurisdiction.
MARKING:	Listee's name, model number, electrical rating and UL label.
APPROVAL:	Listed as manual pull stations for use with separately listed compatible fire alarm control units. * These manual pull boxes meet the requirements of UL Standard 38, 1999 Edition with California amendments.
NOTES:	Formerly 7150-1591:129 and 7150-1388:194

7-29-10 ma

This listing is based upon technical data submitted by the applicant. OSFM Fire Engineering staff has reviewed the test results and/or other data but does not make an independent verification of any claims. This listing is not an endorsement or recommendation of the item listed. This listing should not be used to verify correct operational requirements or installation criteria. Refer to listee's data sheet, installation instructions and/or other suitable information sources.

Date Issued: 05/22/2025

Listing Expires: 06/30/2026

Authorized By: **Michael Huang**, Program Coordinator
Fire Engineering & Investigations Division

EDWARDS

LIFE SAFETY & INCIDENT MANAGEMENT

Intelligent Smoke Detector

SIGA-OSD

FM APPROVED

UL CERTIFIED SAFETY SIGNALING US S853

Helps Reduce Cooking Nuisance Alarms

UL 268 7th Ed.

7272-1657: 0511

Overview

The Signature Optica Series SIGA-OSD smoke detector brings advanced optical sensing technology to a practical design that increases efficiency, saves installation time, cuts costs, and extends life-safety and property-protection capabilities. Continuous self-diagnostics ensure reliability over the long haul, while environmental compensation helps reduce maintenance costs.

Like all Signature Optica Series detectors, the SIGA-OSD is an intelligent device that gathers analog information from multiple optical sensors, converting this data into digital signals. Utilizing dual optical wavelengths combined with multiple detection angles, the SIGA-OSD differentiates particles that are not representative of actual smoke. Particle data is input into digital filters which feed a series of ratios removing signal patterns that are typical of nuisance sources, thus reducing unwanted alarms. To make an alarm decision, the detector's on-board microprocessor measures and analyzes all optical sensor readings and compares this information to preprogrammed settings.

Standard Features

- Multi-criteria optical smoke-sensing technology
- Wide 0.5 to 4.36 %/ft. (1.6 to 13.6 %/m) smoke obscuration
- Uses Existing Wiring
- Integrated nuisance rejection reducing unwanted alarms from general cooking particulates
- Listed to UL 268 7th edition
- Automatic Device Mapping
- Up To 250 Total Signature Addresses Per Loop
- Two Levels of Environmental Compensation
- Two Levels of Dirty Detector Warning
- Twenty Pre-Alarm Settings
- Five Sensitivity Settings
- Non-Volatile Memory
- Electronic Addressing
- Automatic Day/Night Sensitivity Adjustment
- Bicolor (Green/Red) Status LED
- Standard, Relay, Fault Isolator, and Audible Mounting Bases
- Sensor Markings Provide Easy Testing Identification

Note: *Some features described here may not be supported by all control systems. Check your control panel's Installation and Operation Guide for details.*

Application

The SIGA-OSD detects particles from a wide range of combustion sources and will trigger an alarm when smoke density in the chamber reaches preprogrammed level. Thanks to its high-performance reflective-response technology, the smoke sensor responds quickly and reliably to a wide range of fire types, including both fast- and slow-burning fires fueled by combustibles typically found in modern multi-use buildings.

Compatibility

The SIGA-OSD detector is compatible only with control panels using a Signature Loop controller.

Installation

Signature Series detectors mount to North American 1-gang boxes, 3-1/2 inch or 4 inch octagon boxes, and to 4 inch square electrical boxes 1-1/2 inches (38 mm) deep. They mount to European BESA and 1-gang boxes with 60.3 mm fixing centers. See mounting base installation and wiring for more information.

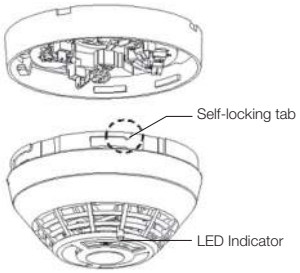

Sensing and reporting technology

The microprocessor in each detector provides additional benefits – Self-diagnostics and History Log, Automatic Device Mapping, and Fast, Stable Communication.

Self-diagnostics and History Log - Each Signature Series detector constantly runs self-checks to provide important maintenance information. The results of the self-check are automatically updated and permanently stored in the detector's non-volatile memory

Automatic Device Mapping - The loop controller learns where each device's serial number address is installed relative to other devices on the circuit. The mapping feature provides supervision of each device's installed location to prevent a detector from being reinstalled (after cleaning, etc.) in a different location from where it was originally.

Fast Stable Communication - On-board intelligence means less information needs to be sent between the detector and the loop controller. Other than regular supervisory polling response, the detector only needs to communicate with the loop controller when it has something new to report.

Testing & Maintenance

Each detector automatically identifies when it is dirty or defective and causes a "dirty detector" message. The detector's sensitivity measurement can also be transmitted to the loop controller. A sensitivity report may be printed to satisfy NFPA sensitivity measurements, which must be conducted at the end of the first year and every two years thereafter.

The user-friendly maintenance program shows the current state of each detector and other pertinent messages. Single detectors may be turned off temporarily from the control panel. Availability of maintenance features is dependent on the fire alarm system used.

Accessories

Detector mounting bases have wiring terminals that are accessible from the "room-side" after mounting the base to the electrical box. The bases mount to North American 1-gang boxes and to 3½ inch or 4 inch octagon boxes, 1½ inches (38 mm) deep. They also mount to European BESA and 1-gang boxes with 60.3 mm fixing centers. The SIGA-SB4, SIGA-RB4, and SIGA-IB4 mount to North American 4 inch sq. electrical boxes in addition to the above boxes. They include the SIGA-TS4 Trim Skirt, which is used to cover the "mounting ears" on the base. The SIGA-AB4G mounts to a 4 inch square box only.

SIGA-AB4G/T/LF Audible Base	SIGA-SB Standard Base	SIGA-IB Isolator Base	SIGA-RB Relay Base	SIGA-LED Remote LED

Remote LED SIGA-LED - The remote LED connects to the SIGA-SB or SIGA-SB4 Standard Base only. It features a North American size 1-gang plastic faceplate with a white finish and red alarm LED.

SIGA-TS4 Trim Skirt - Supplied with 4 inch bases, it can also be ordered separately to use with the other bases to help hide surface imperfections not covered by the smaller bases.

Sounder Bases - Signature Series sounder bases are designed for use where localized- or group-alarm signaling is required.

- **SIGA-AB4G** bases provide sounder capability to Signature Series to heat and smoke detectors. They are not intended for use with combination carbon monoxide detectors in Fire-plus-CO mode.
- **SIGA-AB4GT** bases provide sounder capability to Signature Series smoke and heat detectors, as well as carbon monoxide detectors when used with a SIGA-TCDR Temporal Pattern Generator.
- **SIGA-AB4G-LF** bases provide 520 Hz low frequency sounder capability to Signature Series smoke and heat detectors, as well as carbon monoxide detectors when used with a SIGA-TCDR Temporal Pattern Generator. The SIGA-AB4G-LF is suitable for applications requiring low frequency audible tones.

Typical Wiring

The detector mounting bases accept #18 AWG (0.75mm^2), #16 (1.0mm^2), #14 AWG (1.5mm^2), and #12 AWG (2.5mm^2) wire sizes. Sizes #16 AWG (1.0mm^2) and #18 AWG (0.75mm^2) are preferred for ease of installation.

Standard Detector Base, SIGA-SB, SIGA-SB4

This is the basic mounting base for the EDWARDS Signature Series detectors. The SIGA-LED Remote LED is supported by this base.

Term	Description
1	Not Used
2	DATA IN/OUT (+)
3	Not Used
4	DATA IN (-)
4	Remote LED (-)
5	Remote LED (+)
6	Not Used
7	DATA OUT (-)

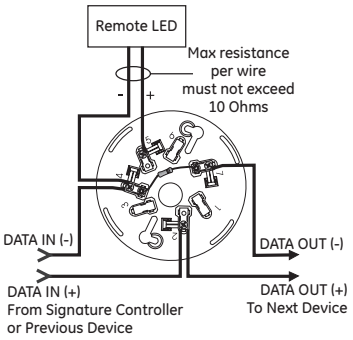

Isolator Detector Base, SIGA-IB, SIGA-IB4

This base includes a built-in line fault isolator for use on Class A circuits. A detector must be installed for it to operate. The isolator base does not support the SIGA-LED Remote LED.

The isolator operates as follows:

- a short on the line causes all isolators to open within 23 msec.
- at 10 msec intervals, beginning on one side of the Class A circuit nearest the loop controller, the isolators close to provide the next isolator down the line with power.
- when the isolator next to the short closes, it reopens within 10 msec.

The process repeats beginning on the other side of the loop controller.

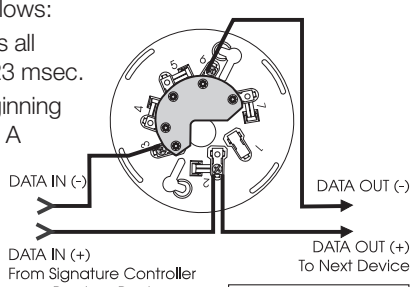

Term	Description
1	Not Used
2	DATA IN/OUT (+)
3	DATA IN (-)
4	Not Used
5	Not Used
6	DATA OUT (-)
7	Not Used

Relay Detector Base, SIGA-RB, SIGA-RB4

This base includes a relay. Normally-Open or Normally-Closed operation is selected during installation. The dry contact is rated for 1 amp (pilot duty) @ 30 Vdc. The relay's position is supervised to avoid accidentally jarring it out of position. The SIGA-RB can be operated as a control relay if programmed to do so at the control panel. The relay base does not support the SIGA-LED Remote LED.

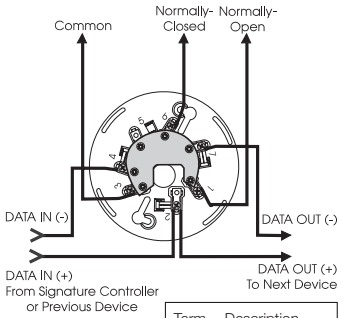

CONTACT RATING
1.0 Amp @ 30 VDC
(Pilot Duty)

Term	Description
1	Normally-Open
2	DATA IN/OUT (+)
3	Common
4	DATA IN (-)
5	Not Used
6	Normally-Closed
7	DATA OUT (-)

Audible Sounder Bases, Fire Mode

AB4GT, AB4G, AB4G-LF sounder bases

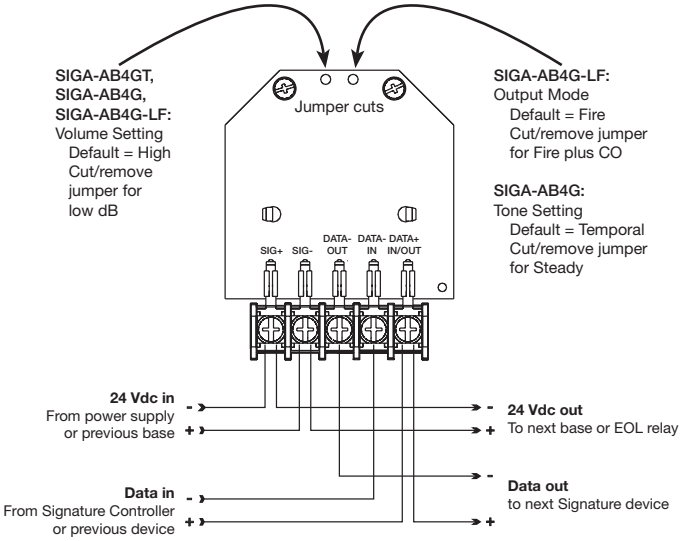

Warnings & Cautions

- This detector does not operate without electrical power. As fires frequently cause power interruption, discuss further safeguards with the local fire protection specialist.
- This detector does not sense fires in areas where smoke cannot reach the detector. Smoke from fires in walls, roofs, or on the opposite side of closed doors may not reach the detector.
- In Canada, install according to CAN/ULC-S524 Standard for the Installation of Fire Alarm Systems, CSA C22.1 Canadian Electrical Code, and the local authority having jurisdiction.

LIFE SAFETY & INCIDENT MANAGEMENT

Contact us

Phone: 800-655-4497 (Option 4)
Email: edwards.fire@carrier.com
Website: edwardsfiresafety.com

8985 Town Center Pkwy
Bradenton, FL 34202

© 2023 Carrier
All rights reserved.

Dimensions

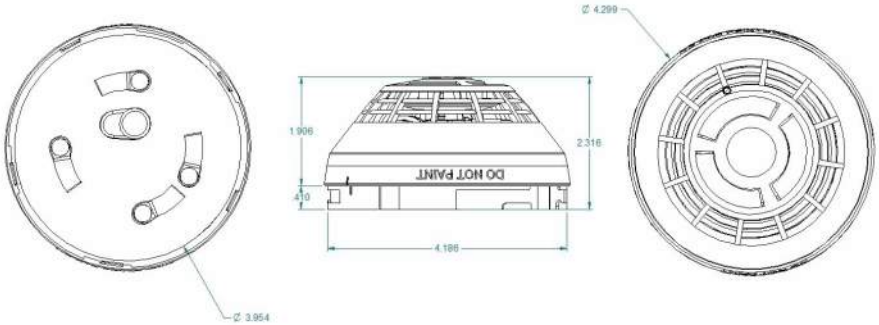

Specifications

Operating voltage	15.20 to 19.95 VDC
Normal operating current	32 µA
Alarm current	45 µA
Smoke Sensitivity Range	UL/ULC: 0.5 to 4.36 %/ft. (1.6 to 13.6 %/m) obscuration
Vibration level	10 to 35 Hz, with an amplitude of 0.01 in.
Air velocity	0 to 4,000 ft./min (0 to 20 m/s)
Wall mounting	12 in. (305 mm) max. from ceiling
Compatible bases	See Ordering Information
Compatible detector testers	Testifire 1000, Testifire 2000
Operating environment	32 to 120°F (0 to 49°C), 0 to 93% RH, noncondensing
Construction	High Impact Engineering Polymer, White
Storage temperature	-4 to 140°F (-20 to 60°C)
Environmental compensation	Automatic
Agency Listings	CAN/ULC-S529, UL 268-7, UL 268A, CSFM

Ordering Information

Catalog Number	Description	Ship Wt. lbs (kg)
SIGA-OSD	Intelligent Optical Smoke Detector	0.4 (0.16)
SIGA-OSD-NL	Intelligent Optical Smoke Detector, no visible logo	0.4 (0.16)

Accessories		
SIGA-SB	Detector Mounting Base - Standard	0.2 (.09)
SIGA-SB4	4-inch Detector Mounting Base c/w Trim Skirt	
SIGA-RB	Detector Mounting Base w/Relay	
SIGA-RB4	4-inch Detector Mounting Base w/Relay, c/w Trim Skirt	
SIGA-IB	Detector Mounting Base w/Fault Isolator	
SIGA-IB4	4-inch Detector Mounting Base w/ Fault Isolator, c/w Trim Skirt	
SIGA-LED	Remote Alarm LED (not for EN54 applications)	
SIGA-AB4G	Audible (Sounder) Base for Fire Detectors	0.3 (0.15)
SIGA-AB4G-LF	Low Frequency Audible (Sounder) Base for CO and/or Fire Detectors	0.3 (0.15)
SIGA-AB4GT	Audible (Sounder) Base for CO and/or Fire Detectors	0.3 (0.15)
SIGA-TS4	Trim Skirt (supplied with 4-inch bases)	0.1 (0.04)
SIGA-TS	Trim Skirt - (optional for non 4-inch bases)	0.1 (0.04)
SIGA-DMP	Detector Mounting Plate	3.0 (1.4)
SIGA-RTA	Detector Removal Tool	

CALIFORNIA DEPARTMENT OF FORESTRY & FIRE PROTECTION
OFFICE OF THE STATE FIRE MARSHAL
FIRE ENGINEERING & INVESTIGATIONS DIVISION
BUILDING MATERIALS LISTING PROGRAM

LISTING SERVICE

LISTING No.:	7272-1657:0511
CATEGORY:	7272 - SMOKE DETECTOR-SYSTEM TYPE-PHOTOELECTRIC
LISTEE:	EDWARDS, A Division of UTC Fire & Security Americas Corporation, Inc. 8985 Town Center Parkway, Bradenton, FL, 34202 Contact: Rodgers, Teresa 941-739-4225 Email: teresa.rodgers@carrier.com
DESIGN:	Models SIGA-OSD, SIGA-OSD-NL, SIGI-OSD, KI-OSD, KIR-OSD, and *SIGA-OSD-MR Multi-Criteria Smoke Detector Heads. Analog addressable photoelectric smoke detectors. *Models are suitable for maximum installation temperatures up to 49°C (120°F), and are suitable for open-air velocity range of 4000fpm. Refer to listee's data sheet for detailed product description, *model differences, and operational consideration.
RATING:	15.2-19.95 VDC
INSTALLATION:	In accordance with listee's printed installation instructions, NFPA 72, applicable codes and ordinances, and in a manner acceptable to the authority having jurisdiction.
MARKING:	Listee's name, model number, electrical rating, and UL label. Models beginning with SIGA and SIGI are marked Edwards. Models beginning with KI and KIR are marked Kidde.
APPROVAL:	Listed as analog addressable photoelectric smoke detectors for use with listee's separately listed *detector bases, and the following compatible fire alarm control units: models EST3 (7165-1657:0186); iO64, iO1000 (7165-1657:0244); and EST3X (7165-1657:0306). *Models comply with the applicable requirements in UL 268, 7th Edition. Refer to listee's installation, operation, *compatibility details and maintenance manual for details.
NOTES:	The photoelectric type detectors are generally more effective at detecting slow, smoldering fires, which smolder for hours before bursting into flames. Sources of these fires may include cigarettes burning in couches or bedding. The ionization type detectors are generally more effective at detecting fast, flaming fires, which consume combustible materials rapidly and spread quickly. Sources of these fires may include paper burning in a waste container or a grease fire in the kitchen.

CALIFORNIA DEPARTMENT OF FORESTRY & FIRE PROTECTION
OFFICE OF THE STATE FIRE MARSHAL
FIRE ENGINEERING & INVESTIGATIONS DIVISION
BUILDING MATERIALS LISTING PROGRAM

LISTING SERVICE

10-10-25 MH

*Revised

This listing is based upon technical data submitted by the applicant. OSFM Fire Engineering staff has reviewed the test results and/or other data but does not make an independent verification of any claims. This listing is not an endorsement or recommendation of the item listed. This listing should not be used to verify correct operational requirements or installation criteria. Refer to listee's data sheet, installation instructions and/or other suitable information sources.

Date Issued: 10/15/2025

Listing Expires: 06/30/2026

Authorized By: **Michael Huang**, Program Coordinator
Fire Engineering & Investigations Division

CALIFORNIA DEPARTMENT OF FORESTRY & FIRE PROTECTION
OFFICE OF THE STATE FIRE MARSHAL
FIRE ENGINEERING & INVESTIGATIONS DIVISION
BUILDING MATERIALS LISTING PROGRAM

LISTING SERVICE

LISTING No.:	7300-1657:0120
CATEGORY:	7300 - FIRE ALARM CONTROL UNIT ACCESSORIES/MISC. DEVICES
LISTEE:	EDWARDS, A Division of UTC Fire & Security Americas Corporation, Inc. 8985 Town Center Parkway, Bradenton, FL, 34202 Contact: Rodgers, Teresa 941-739-4225 Email: teresa.rodgers@carrier.com
DESIGN:	Detector Bases. Base models are as follows: Models 5963B, 5964 B/BR, 6241B-002, 6249B-001, 6251, 6251B-001A, -001, -002, -003, -004, 6251B-100, -200, -R100, -R200, and 6251-2. Models 6251B-001, -002, -003, and -004 are suitable for releasing device service. Models P-847674-0022, -0024, -0042, -0043, -0044, -0045, -0046, -0047. Models SIGA-IB, -IB4, -RB, -RB4, -SB, -SB4, -AB4, *-RBB, *-RB4B *-IBB, *-IB4B, *-SBB, *-SB4B. Models KI-IB, -IB4, -RB, -RB4, -SB, -SB4, *-SBB, *-SB4B. The -RB series are suitable for releasing device service. Models SIGI-SB and SIGI-SB4. Models EC2-SB, EC2-SB4, EC2-RB, EC2-RB4, KC2-SB, KC2-SB4, KC2-RB, and KC2-RB4. EC2 and KC2 series models has a base identifier EC2 for two wire compatibility. Model AB4G-SB surface mount back box for use with listee's SIGA series sounder bases. Refer to listee's data sheet for detailed product description and operational considerations.
RATING:	See related detector rating for further details.
INSTALLATION:	In accordance with listee's printed installation instructions, applicable codes and ordinances, and in a manner acceptable to the authority having jurisdiction.
MARKING:	Listee's name, model number, electrical rating, and UL label. KI and KC2 are under the Kidde Brand. SIGA, SIGI, and EC2 are under the Edwards Brand.
APPROVAL:	Listed as mounting bases for use with separately listed compatible detectors and fire alarm control units. Refer to listee's Installation Instruction Manual for details.

CALIFORNIA DEPARTMENT OF FORESTRY & FIRE PROTECTION
OFFICE OF THE STATE FIRE MARSHAL
FIRE ENGINEERING & INVESTIGATIONS DIVISION
BUILDING MATERIALS LISTING PROGRAM

LISTING SERVICE

NOTES:	Formerly 7300-1591:0120 and 7300-1388:0170

03-24-25 MH

*Revised

This listing is based upon technical data submitted by the applicant. OSFM Fire Engineering staff has reviewed the test results and/or other data but does not make an independent verification of any claims. This listing is not an endorsement or recommendation of the item listed. This listing should not be used to verify correct operational requirements or installation criteria. Refer to listee's data sheet, installation instructions and/or other suitable information sources.

Date Issued: 05/21/2025

Listing Expires: 06/30/2026

Authorized By: **Michael Huang**, Program Coordinator
Fire Engineering & Investigations Division

EDWARDS
Built for Resilience

Intelligent CO Detector

SIGA-COD

S853

Overview

The Signature Series SIGA-COD carbon monixide detector brings advanced sensing technology to a practical design that increases efficiency, saves installation time, cuts costs, and extends life safety capabilities. Continuous self-diagnostics ensures reliability over the long-haul, while advanced electrochemical CO sensing technology provides performance benefits that keep occupants safe from carbon monoxide, the “silent killer”.

Like all Signature Series detectors, the SIGA-COD is an intelligent device that gathers analog information from its CO sensor, converting this data into digital signals. To make an alarm decision, the detector’s on-board microprocessor measures and analyzes sensor readings over time. Digital filters remove signal patterns that are not typical of life safety events, thus virtually eliminating unwanted alarms.

The SIGA-COD includes an advanced carbon monoxide sensor. When the electrochemical cell reaches its end of life after approximately ten years, the detector signals a trouble condition to the control panel. Refer to the control panel documentation for specific end of life timing.

Standard Features

Note: *Some features described here may not be supported by all control systems. Check your control panel’s Installation and Operation Guide for details.*

- Next Generation CO Sensing Technology
- Advanced electrochemical carbon monoxide sensing technology
- Uses existing wiring
- Automatic device mapping
- Sensor Markings Provide Easy Testing Identification
- Up To 250 Total Signature Adresses Per Loop
- Non-volatile memory
- Electronic addressing
- Automatic day/night sensitivity adjustment
- Bicolor (green/red) status LED
- Standard, relay, fault isolator, and audible mounting bases

Application

CO detection has rapidly become a standard part of life safety strategies everywhere. Monitored CO detection is mandated with increasing frequency in all types of commercial applications, but particularly in occupancies such as hotels, rooming houses, dormitories, day care facilities, schools, hospitals, assisted living facilities, and nursing homes. In fact, more than half of the U.S. population already lives in states requiring the installation of CO detectors in some commercial occupancies. This is because carbon monoxide is the leading cause of accidental poisoning deaths in America. Known as the "Silent Killer," CO is odorless, tasteless, and colorless. It claims nearly 500 lives, and results in more than 15,000 hospital visits annually.

Concentration	Symptoms	Duration of Exposure
35PPM	None	<=8 hours
150PPM	Mild Headache	2 – 3 hours
400PPM	Headache/Nausea	1 – 2 hours
800 PPM	Headache/nausea/dizziness/ Progressing to unconscious	45 min. to 2 hours
6,400 PPM	Headache/nausea & dizziness	1 – 2 min.
12,800 PPM	Immediately dangerous to life or health	

Compatibility

The SIGA-COD detector is compatible only with the Signature Loop Controller.

Installation

Signature Series detectors mount to North American 1-gang boxes, 3-1/2 inch or 4 inch octagon boxes, and to 4 inch square electrical boxes 1-1/2 inches (38 mm) deep. They mount to European BESA and 1-gang boxes with 60.3 mm fixing centers. See mounting base installation and wiring for more information.

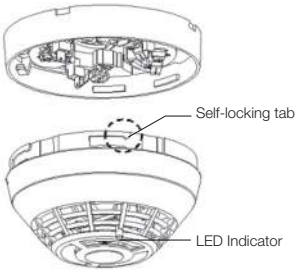

Testing & Maintenance

The user-friendly maintenance program shows the current state of each detector and other pertinent messages. Single detectors may be turned off temporarily from the control panel. Availability of maintenance features is dependent on the fire alarm system used. When the CO sensor's electrochemical cell reaches its end of life, the detector signals a Trouble condition to the control panel. Scheduled maintenance (regular or selected) for proper detector operation should be planned to meet the requirements of the Authority Having Jurisdiction (AHJ). Refer to current NFPA 72, NFPA 720, and ULC CAN/ULC 536 standards.

Sensor Life

The CO sensor has a 10-year life from the date of manufacture or when the control panel indicates a sensor end-of-life condition, whichever comes first. The detector signals a "COMMON TRBL ACT" condition on the control panel when the CO sensor reaches its end of life. Pressing the Details button on the control panel displays "END OF LIFE ACT" providing verification that it is an end-of-life trouble of the CO sensor. This trouble remains active until the detector is replaced, even if the panel is reset.

Sensing and reporting technology

The microprocessor in each detector provides additional benefits - Self-diagnostics and History Log, Automatic Device Mapping, and Fast, Stable Communication.

Self-diagnostics and History Log - Each Signature Series detector constantly runs self-checks to provide important maintenance information. The results of the self-check are automatically updated and permanently stored in the detector's non-volatile memory.

Automatic Device Mapping - The loop controller learns where each device's serial number address is installed relative to other devices on the circuit. The mapping feature provides supervision of each device's installed location to prevent a detector from being reinstalled (after cleaning etc.) in a different location from where it was originally.

Fast Stable Communication - On-board intelligence means less information needs to be sent between the detector and the loop controller. Other than regular supervisory polling response, the detector only needs to communicate with the loop controller when it has something new to report.

Accessories

Detector mounting bases have wiring terminals that are accessible from the "room-side" after mounting the base to the electrical box. The bases mount to North American 1-gang boxes and to 3½ inch or 4 inch octagon boxes, 1½ inches (38 mm) deep. They also mount to European BESA and 1-gang boxes with 60.3 mm fixing centers. The SIGA-SB4, SIGA-RB4, and SIGA-IB4 mount to North American 4 inch sq. electrical boxes in addition to the above boxes. They include the SIGA-TS4 Trim Skirt, which is used to cover the "mounting ears" on the base. The SIGA-AB4G mounts to a 4 inch square box only.

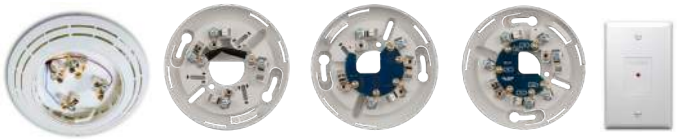

SIGA-AB4G/T/LF Audible Base | **SIGA-SB** Standard Base | **SIGA-IB** Isolator Base | **SIGA-RB** Relay Base | **SIGA-LED** Remote LED

Remote LED SIGA-LED - The remote LED connects to the SIGA-SB or SIGA-SB4 Standard Base only. It features a North American size 1-gang plastic faceplate with a white finish and red alarm LED.

SIGA-TS4 Trim Skirt - Supplied with 4 inch bases, it can also be ordered separately to use with the other bases to help hide surface imperfections not covered by the smaller bases.

Sounder Bases - Signature Series sounder bases are designed for use where localized or group alarm signaling is required.

- **SIGA-AB4GT** bases provide sounder capability to the SIGA-COD when used with a SIGA-TCDR Temporal Pattern Generator to produce the appropriate CO (TC4) tone pattern.
- **SIGA-AB4G-LF** bases provide 520 Hz low frequency sounder capability to the SIGA-COD when used with a SIGA-TCDR Temporal Pattern Generator to produce the appropriate CO (TC4) tone pattern. The SIGA-AB4G-LF is suitable for applications requiring low frequency audible tones.

Typical Wiring

The detector mounting bases accept #18 AWG (0.75mm^2), #16 (1.0mm^2), #14 AWG (1.5mm^2), and #12 AWG (2.5mm^2) wire sizes. Sizes #16 AWG (1.0mm^2) and #18 AWG (0.75mm^2) are preferred for ease of installation.

Standard Detector Base, SIGA-SB, SIGA-SB4

This is the basic mounting base for EDWARDS Signature Series detectors. The SIGA-LED Remote LED is supported by this Base.

Term	Description
1	Not Used
2	DATA IN/OUT (+)
3	Not Used
4	DATA IN (-)
4	Remote LED (-)
5	Remote LED (+)
6	Not Used
7	DATA OUT (-)

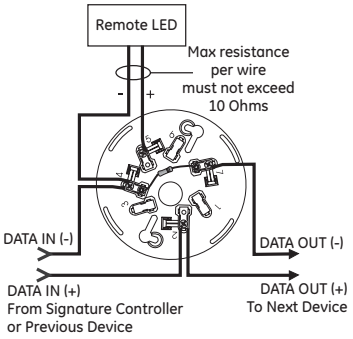

Isolator Detector Base, SIGA-IB, SIGA-IB4

This base includes a built-in line fault isolator for use on Class A circuits. A detector must be installed for it to operate. The isolator base does not support the SIGA-LED Remote LED.

The isolator operates as follows:

- a short on the line causes all isolators to open within 23 msec
- at 10 msec intervals, beginning on one side of the Class A circuit nearest the loop controller, the isolators close to provide the next isolator down the line with power
- when the isolator next to the short closes, it reopens within 10 msec.

The process repeats beginning on the other side of the loop controller.

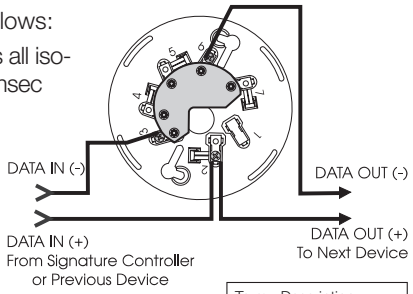

Term	Description
1	Not Used
2	DATA IN/OUT (+)
3	DATA IN (-)
4	Not Used
5	Not Used
6	DATA OUT (-)
7	Not Used

Relay Detector Base, SIGA-RB, SIGA-RB4

This base includes a relay. Normally Open or Normally Closed operation is selected during installation. The dry contact is rated for 1 amp (pilot duty) @ 30 Vdc. The relay's position is supervised to avoid accidentally jarring it out of position. The SIGA-RB can be operated as a control relay if programmed to do so at the control panel. The relay base does not support the SIGA-LED Remote LED.

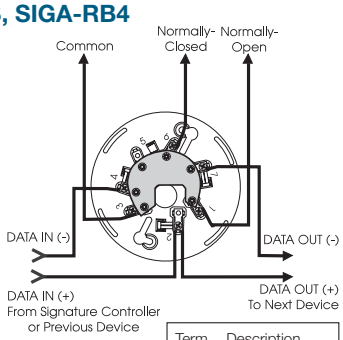

CONTACT RATING
1.0 Amp @ 30 VDC
(Pilot Duty)

Term	Description
1	Normally Open
2	DATA IN/OUT (+)
3	Common
4	DATA IN (-)
5	Not Used
6	Normally-Closed
7	DATA OUT (-)

Audible Sounder Bases, Fire-plus-CO Mode

AB4GT and AB4G-LF sounder bases.

These configurations require a SIGA-TCDR Temporal Pattern Generator to produce the appropriate CO (TC4) tone pattern.

Fire-plus-CO mode wiring for detector operation of bases

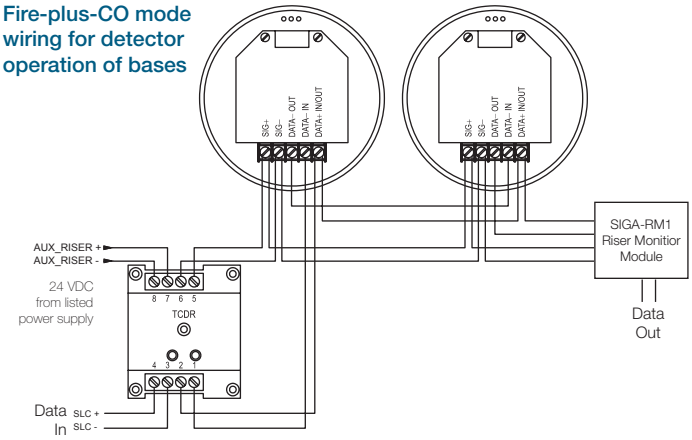

Fire-plus-CO mode wiring for detector and system operation of bases

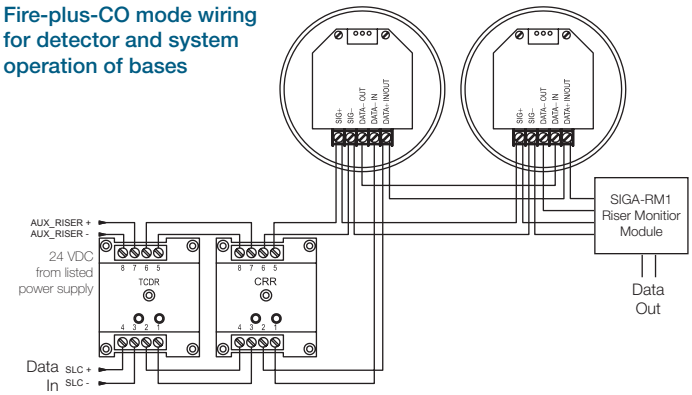

Warnings & Cautions

- This detector is designed to protect individuals from the acute affects of CO exposure. It will not fully safeguard individuals with specific medical conditions. People with special medical problems should consider using specialized detection devices with less than 30 ppm (parts per million) alarming capabilities. If in doubt, consult a medical practitioner.
- If the detector is in trouble or at the end of its life, it may not sense CO and cannot be relied upon to monitor CO levels. Replace the detector every ten years from the date of manufacture or when the control panel indicates a sensor end-of-life condition, whichever comes first.
- A detector installed outside a bedroom may not awaken a sleeper.
- Normal noise due to stereos, television, etc. may also prevent the detector from being heard if distance or closed or partly closed doors muffle the sounder. This unit is not designed for the hearing impaired.
- CO detectors are not a substitute for life safety. Though these detectors will warn against increasing CO levels, we do not warrant or imply in any way that they will protect lives from CO poisoning. They should only be considered as an integral part of a comprehensive safety program.

Contact us

Phone: 800-655-4497 (Option 4)
Email: edwards.fire@kgsolutions.com
Website: edwardsfiresafety.com

8985 Town Center Pkwy
Bradenton, FL 34202

©2025 Walter Kidde Portable Equipment, LLC.
All Rights Reserved.

Dimensions

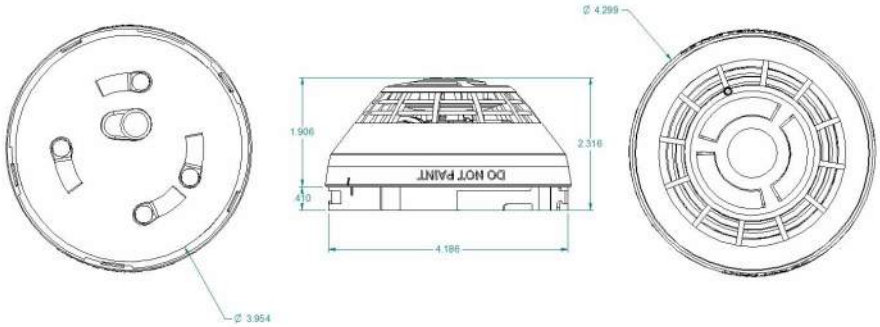

Specifications

Operating voltage	15.20 to 19.95 VDC
Normal operating current	51 µA
Alarm current	68 µA
Vibration level	10 to 35 Hz, with an amplitude of 0.01 in.
Compatible bases	See Ordering Information
Compatible detector testers	Testifire 1000, Testifire 2000
Operating environment	32 to 120°F (0 to 49°C), 0 to 90% RH, noncondensing
Construction	High Impact Engineering Polymer, White
Storage temperature	-4 to 140°F (-20 to 60°C)
UL CO alarm level per UL 2034, CAN/CSA 6.19	70 ppm 60 to 240 minutes 150 ppm 10 to 50 minutes 400 ppm 4 to 15 minutes
UL CO false alarm level per UL 2034, CAN/CSA 6.19	30 ppm 30 days 70 ppm 60 minutes
Agency Listings, SIGA-COD	UL 2075. Evaluated to the CO alarm sensitivity limits of UL 2034.
Agency Listings, SIGA-COD-CA	ULC Listed to CAN/CSA 6.19.

Ordering Information

Catalog Number	Description	Ship Wt. lbs (kg)
SIGA-COD	Intelligent Carbon Monoxide Detector	0.4 (0.16)
SIGA-COD-CA	Intelligent Carbon Monoxide Detector, Canadian Market	0.4 (0.16)

Compatible Bases		
SIGA-SB	Detector Mounting Base - Standard	0.2 (.09)
SIGA-SB4	4-inch Detector Mounting Base c/w Trim Skirt	
SIGA-RB	Detector Mounting Base w/Relay	
SIGA-RB4	4-inch Detector Mounting Base w/Relay, c/w Trim Skirt	
SIGA-IB	Detector Mounting Base w/Fault Isolator	
SIGA-IB4	4-inch Detector Mounting Base w/ Fault Isolator, c/w Trim Skirt	
SIGA-LED	Remote Alarm LED (not for EN54 applications)	
SIGA-TCDR	Tone Generator for Detector Sounder Bases with CO mode	0.2 (0.1)
SIGA-AB4G-LF	Low Frequency Audible (Sounder) Base for CO and Fire Detectors	0.3 (0.15)
SIGA-AB4GT	Audible (Sounder) Base for CO and Fire Detectors	0.3 (0.15)
SIGA-TS4	Trim Skirt (supplied with 4-inch bases)	0.1 (.04)
SIGA-RTA	Detector Removal Tool	

CALIFORNIA DEPARTMENT OF FORESTRY & FIRE PROTECTION
OFFICE OF THE STATE FIRE MARSHAL
FIRE ENGINEERING & INVESTIGATIONS DIVISION
BUILDING MATERIALS LISTING PROGRAM

LISTING SERVICE

LISTING No.:	5278-1657:0335
CATEGORY:	5278 - CARBON MONOXIDE DETECTORS
LISTEE:	EDWARDS, A Division of UTC Fire & Security Americas Corporation, Inc. 8985 Town Center Parkway, Bradenton, FL, 34202 Contact: Rodgers, Teresa 941-739-4225 Email: teresa.rodgers@carrier.com
DESIGN:	Models SIGA-COD, SIGI-COD, *SIGA-COD-NL, KI-COD and KIR-COD Analog Addressable Carbon Monoxide Detectors. The carbon monoxide detector is designed to communicate an end-of-life signal to the control panel following ten years from the date of manufacture. Model SIGI-COD is similar to Model SIGA-COD except for isolation circuitry. Model KI-COD is identical to Model SIGA-COD except for trade name. Model KIR-COD is similar to Model SIGA-COD except for control panel compatibility. Model SIGA-COD-NL is similar to Model SIGA-COD except to signify no logo on the nameplate label Refer to listee's data sheet for detailed product description and operational considerations.
RATING:	15.2-19.95 Vdc
INSTALLATION:	In accordance with listee's printed installation instructions, NFPA 720, applicable codes and ordinances, and in a manner acceptable to the authority having jurisdiction.
MARKING:	Listee's name, model number, electrical rating and UL label. Models SIGA-COD, *SIGA-COD-NL, and SIGI-COD are under the Edwards brand. Models KI-COD and KIR-COD are under the Kidde brand.

CALIFORNIA DEPARTMENT OF FORESTRY & FIRE PROTECTION
OFFICE OF THE STATE FIRE MARSHAL
FIRE ENGINEERING & INVESTIGATIONS DIVISION
BUILDING MATERIALS LISTING PROGRAM

LISTING SERVICE

APPROVAL:	Listed as analog addressable CO detectors. Models SIGA-COD and *SIGA-COD-NL is for use with listee's Models EST3 (CSFM No. 7165-1657:0186); iO64 and iO1000 (CSFM No. 7165-1657:0244); EST3X (CSFM No. 7165-1657:0306) fire alarm control units. Models SIGI-COD and KI-COD are for use with listee's Model EST3 (CSFM No. 7165-1657:0186) fire alarm control unit. Model KIR-COD is for use with listee's Models FX-64, FX-254 and FX-1000 (CSFM No. 7165-1657:0244) fire alarm control units. Models SIGA-COD and *SIGA-COD-NL is for use with listee's bases; Models SIGA-SB, -SB4, -RB, -RB4, -IB, -IB4 (CSFM No. 7300-1657:0120), SIGA-AB4GT (CSFM No. 7300-1657:0307) and SIGA-AB4G-LF (CSFM No. 7300-1657:0322). Model SIGI-COD is for use with listee's bases; Models SIGI-AB4GT (CSFM No. 7300-1657:0307) and SIGI-AB4G-LF (CSFM No. 7300-1657:0322). Models KI-COD and KIR-COD are for use with listee's bases; Models KI-ABDT (CSFM No. 7300-1657:0307) and KI-ABLT (CSFM No. 7300-1657:0322). Authority having jurisdiction should be consulted prior to installation. Refer to listee's Installation Instruction Manual for details.
NOTES:	

02-05-24 MH

This listing is based upon technical data submitted by the applicant. OSFM Fire Engineering staff has reviewed the test results and/or other data but does not make an independent verification of any claims. This listing is not an endorsement or recommendation of the item listed. This listing should not be used to verify correct operational requirements or installation criteria. Refer to listee's data sheet, installation instructions and/or other suitable information sources.

Date Issued: 05/23/2025

Listing Expires: 06/30/2026

Authorized By: **Michael Huang**, Program Coordinator
Fire Engineering & Investigations Division

CALIFORNIA DEPARTMENT OF FORESTRY & FIRE PROTECTION
OFFICE OF THE STATE FIRE MARSHAL
FIRE ENGINEERING & INVESTIGATIONS DIVISION
BUILDING MATERIALS LISTING PROGRAM

LISTING SERVICE

LISTING No.:	7300-1657:0120
CATEGORY:	7300 - FIRE ALARM CONTROL UNIT ACCESSORIES/MISC. DEVICES
LISTEE:	EDWARDS, A Division of UTC Fire & Security Americas Corporation, Inc. 8985 Town Center Parkway, Bradenton, FL, 34202 Contact: Rodgers, Teresa 941-739-4225 Email: teresa.rodgers@carrier.com
DESIGN:	Detector Bases. Base models are as follows: Models 5963B, 5964 B/BR, 6241B-002, 6249B-001, 6251, 6251B-001A, -001, -002, -003, -004, 6251B-100, -200, -R100, -R200, and 6251-2. Models 6251B-001, -002, -003, and -004 are suitable for releasing device service. Models P-847674-0022, -0024, -0042, -0043, -0044, -0045, -0046, -0047. Models SIGA-IB, -IB4, -RB, -RB4, -SB, -SB4, -AB4, *-RBB, *-RB4B *-IBB, *-IB4B, *-SBB, *-SB4B. Models KI-IB, -IB4, -RB, -RB4, -SB, -SB4, *-SBB, *-SB4B. The -RB series are suitable for releasing device service. Models SIGI-SB and SIGI-SB4. Models EC2-SB, EC2-SB4, EC2-RB, EC2-RB4, KC2-SB, KC2-SB4, KC2-RB, and KC2-RB4. EC2 and KC2 series models has a base identifier EC2 for two wire compatibility. Model AB4G-SB surface mount back box for use with listee's SIGA series sounder bases. Refer to listee's data sheet for detailed product description and operational considerations.
RATING:	See related detector rating for further details.
INSTALLATION:	In accordance with listee's printed installation instructions, applicable codes and ordinances, and in a manner acceptable to the authority having jurisdiction.
MARKING:	Listee's name, model number, electrical rating, and UL label. KI and KC2 are under the Kidde Brand. SIGA, SIGI, and EC2 are under the Edwards Brand.
APPROVAL:	Listed as mounting bases for use with separately listed compatible detectors and fire alarm control units. Refer to listee's Installation Instruction Manual for details.

CALIFORNIA DEPARTMENT OF FORESTRY & FIRE PROTECTION
OFFICE OF THE STATE FIRE MARSHAL
FIRE ENGINEERING & INVESTIGATIONS DIVISION
BUILDING MATERIALS LISTING PROGRAM

LISTING SERVICE

NOTES:	Formerly 7300-1591:0120 and 7300-1388:0170

03-24-25 MH

*Revised

This listing is based upon technical data submitted by the applicant. OSFM Fire Engineering staff has reviewed the test results and/or other data but does not make an independent verification of any claims. This listing is not an endorsement or recommendation of the item listed. This listing should not be used to verify correct operational requirements or installation criteria. Refer to listee's data sheet, installation instructions and/or other suitable information sources.

Date Issued: 05/21/2025

Listing Expires: 06/30/2026

Authorized By: **Michael Huang**, Program Coordinator
Fire Engineering & Investigations Division

EDWARDS

LIFE SAFETY & INCIDENT MANAGEMENT

Intelligent Duct Smoke Detector

SIGA-SD

FM APPROVED MEA 3242-1657: 0223 S853

Overview

The EDWARDS *SuperDuct* Signature Series smoke detector is the most advanced and most reliable device in its class. Designed for easy installation and superb reliability, *SuperDuct* represents the perfect balance of practical design and advanced technology.

***SuperDuct* detectors** feature a unique design that speeds installation and simplifies maintenance. Removable dust filters, conformally coated circuit boards, and optional water-resistant gaskets keep contaminants away from components, ensuring years of trouble-free service. When cleaning is required, the assemblies come apart easily and snap back together in seconds.

A Signature Series photoelectric sensor is incorporated into the design of each SIGA-SD duct smoke detector. This sensor inherits the power and benefits of this exceptional line of intelligent devices.

Signature Series sensors gather analog information from their smoke sensing elements and convert it into digital signals. The sensor measures and analyses these signals and compares the information to historical readings and time patterns to make an alarm decision. Digital filters remove signal patterns that are not typical of fires, which virtually eliminates unwanted alarms.

WARNING: Duct detectors have specific limitations. Duct detectors are not a substitute for an open area smoke detector. Duct detectors are not a substitute for early warning detection or a replacement for a building's regular fire detection system. Smoke detectors are not designed to detect toxic gases which can build up to hazardous levels in some fires. These devices will not operate without electrical power. As fires frequently cause power interruptions, EDWARDS suggests you discuss further safeguards with your local fire protection specialist.

Standard Features

- Less than 2" deep for easy installation and applications where space is tight
- -20°F to 158°F (-29°C to 70°C) operating range with 100 ft/min. to 4,000 ft/min air velocity rating assures reliability under harsh environmental conditions
- Status LEDs remain visible through clear assembly cover
- Cover monitor switch for added security
- Standard sampling tube spacing for easy drop-in migration from other detectors
- Sampling tube can be installed with or without the cover in place and can be rotated in 45-degree increments to ensure proper alignment with duct airflow
- 15.2 to 19.95 Vdc operation
- Magnet-activated test switch
- One Form C auxiliary alarm relay for controlling ancillary equipment (e.g., HVAC controls)
- No special tools required for easy access to field connections
- Signature Series intelligence
- Environmental compensation with differential sensing for reliable, stable, and drift-free sensitivity
- Wide 0.79% to 2.46% obscuration/ft. smoke sensitivity
- Identification of dirty or defective detectors

Application

SuperDuct detectors are ideally suited to duct smoke detection applications where early indication of combustion is required within the confined space of ventilation ductwork. Its primary purpose is to provide early warning of an impending fire and to prevent smoke from circulating throughout the building. It is typically used to detect smoke in the supply side of the HVAC system but can provide supervision of the return side as well.

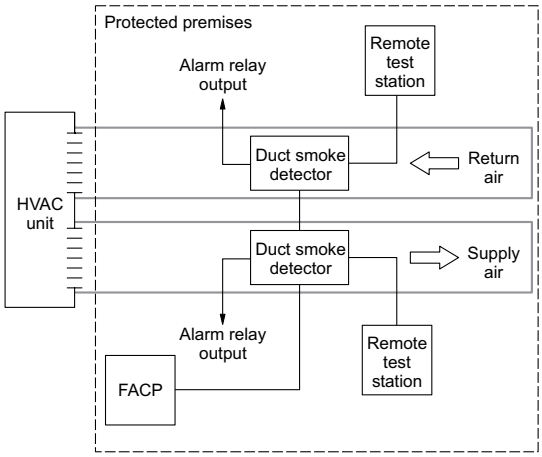

SuperDuct detectors continually sample air flow in the HVAC duct and initiate an alarm condition whenever smoke is detected. An alarm is activated when the quantity (percent obscuration) of combustion products in that air sample exceeds the detector's sensitivity setting.

Signature Series Intelligence

Like all Signature detectors, the SIGA-SD features electronic addressing and issues a dirty sensor warning when it reaches its preset limit. The dirty sensor warning indicates the sensor is operating within its specified limits but is in need of servicing. When the detector's ability to compensate for environmental changes has reached its limit, the duct smoke detector signals a trouble condition.

The SIGA-SD also uses differential sensing to prevent gradual environmental changes from triggering unwanted alarms. A rapid change in environmental conditions, such as smoke from a fire, causes the detector to signal an alarm state, but dust and debris accumulated over time does not change alarm sensitivity.

Each Signature Series SuperDuct detector contains a microprocessor that performs comprehensive self-diagnostics and stores the results in nonvolatile memory. Stored results include details such as hours of operation, last maintenance date, and number of alarms and troubles. This information can be retrieved and reviewed when desired.

Detector Configuration

The detector assembly cover provides easy access to the smoke sensor, its wiring connections, sample and exhaust tubes, and the smoke chamber itself.

Air enters the detector's sensing chamber through a sampling tube (ordered separately) that extends into the duct and is directed back into the ventilation system through an exhaust tube (included). The difference in air pressure between the two tubes pulls the sampled air through the sensing chamber. When a sufficient amount of smoke is detected in the sensing chamber, the detector initiates an alarm.

The sampling tube may be installed from either the duct side of the assembly or from inside the sensor compartment, as preferred by the installer. (The exhaust tube must be installed from the duct side.) Sampling tubes may be rotated in 45-degree increments so that air-holes can be aligned to allow the unit to be mounted at virtually any angle relative to the air flow.

In installations where the duct smoke detector's controls and indicators are hidden from view, a remote test station or an LED indicator can be connected to the detector to provide these functions.

Remote Test Stations

Labor-saving Remote Test/Reset stations provide alarm testing from the convenience of a remote location. Tests can be performed quickly and safely – without having to climb to the roof. Magnetically-operated and key-operated one-gang models are available. Signature SuperDuct detectors are also compatible with SIGA-LED remote alarm LED.

Air velocity in the duct as low as 100 ft/min. maintains adequate air flow into the sensor smoke chamber through air holes in the air sampling tube and discharges through the exhaust tube. *SuperDuct* air sampling tubes must be installed with the inlet holes facing the airstream. Sampling tubes may be rotated in 45-degree increments so that air-holes can be aligned to allow the unit to be mounted in virtually any angle relative to the airflow.

SuperDuct sensors are engineered to operate optimally under the harsh environmental conditions frequently found in HVAC ductwork. Nonetheless, before installing the detector, test the duct air velocity, temperature, and humidity to verify that it is within the operating range of the *SuperDuct* detector. Consult the *SuperDuct* installation sheet for details.

Dimensions

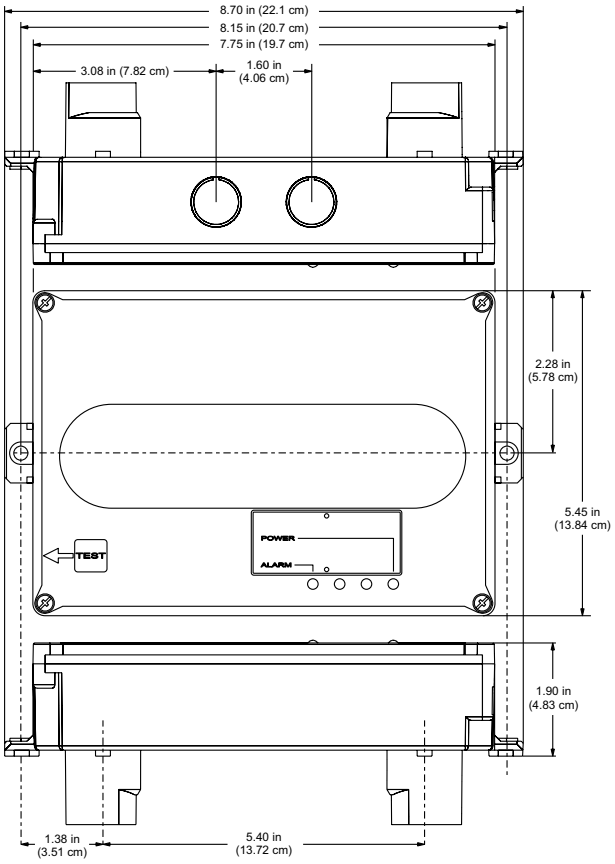

Assembly

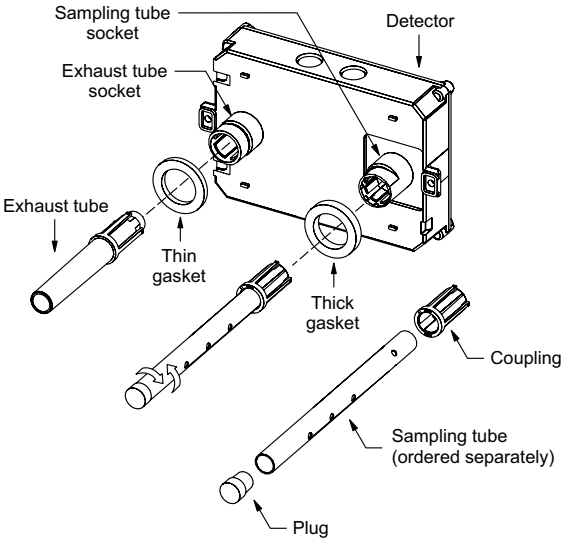

Mounting

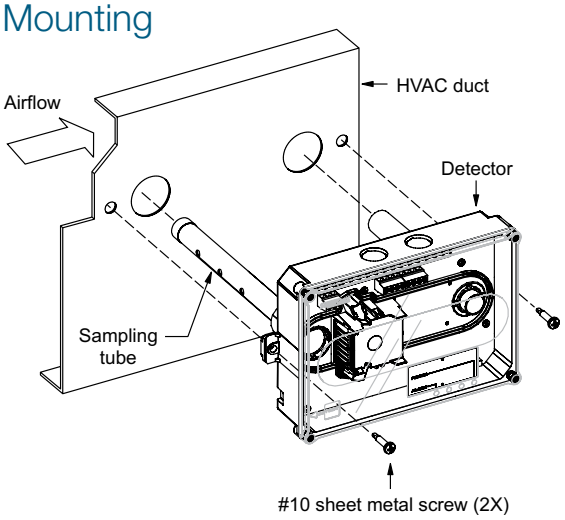

Wiring

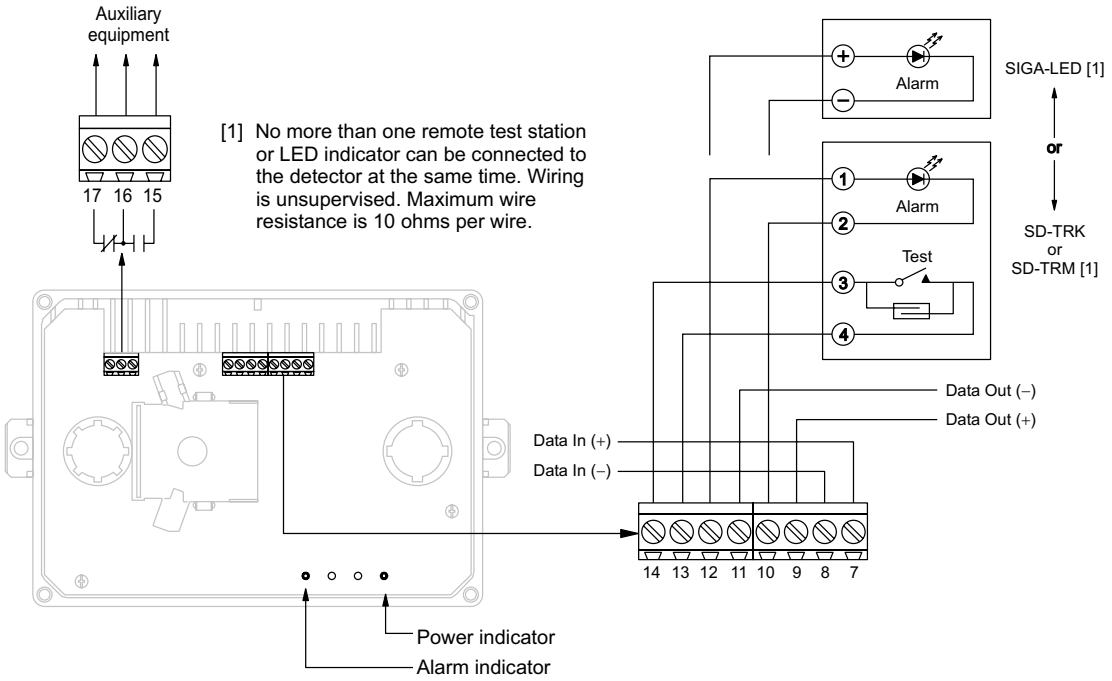

[1] No more than one remote test station or LED indicator can be connected to the detector at the same time. Wiring is unsupervised. Maximum wire resistance is 10 ohms per wire.

High-humidity environments

Use the SD-PH Protective Housing when installing SuperDuct detectors in high-humidity environments. The SD-PH is a weatherized housing that prevents condensation on the device by insulating the detectors and providing circulated air from the monitored HVAC duct. The SD-PH also adds a layer of protection against physical damage to the unit.

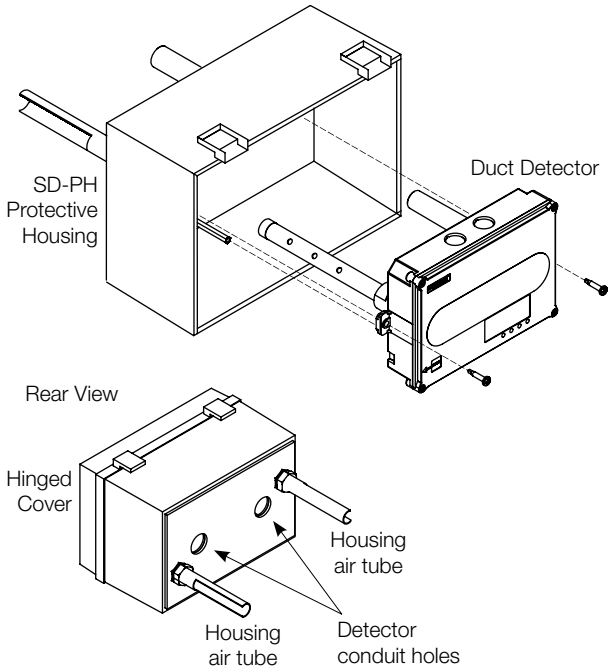

The SD-PH is easy to install and service. The hinged and transparent cover provides ready access to the detector, while keeping its status indicators visible at all times.

Note: The SD-PH Protective Housing is weatherized against outdoor air, but it is not intended for direct outdoor exposure.

LIFE SAFETY & INCIDENT MANAGEMENT

Contact us

Phone: 800-655-4497 (Option 4)
Email: edwards.fire@carrier.com
Website: edwardsfiresafety.com

8985 Town Center Pkwy
Bradenton, FL 34202

© 2020 Carrier
All rights reserved.

Specifications, detector

Dimensions	8.70 x 5.45 x 1.90 inches (221 x 138 x 48 mm)
Wire size	14 to 22 AWG
Detection method	Photoelectric (light scattering principle)
Air velocity rating	100 to 4,000 ft/min and meets the required minimum air pressure differential
Air pressure differential	0.005 to 1.00 inches of water
Sensitivity	0.79 to 2.46 %/ft obscuration
Alarm test response time	5 seconds
LED indicators	Alarm (red), Power (green)
Common alarm relay	Unsupervised and power-limited Quantity: 1 Type: Form C Ratings: 2.0 A at 30 Vdc (resistive)
Operating voltage	15.2 to 19.95 Vdc
Operating current	Standby: 45 µA Alarm: 45 µA Inrush: 1 mA Standalone alarm: 18 mA
Operating environment	Temperature (UL): -20 to 158 °F (-29 to 70 °C). Temperature (ULC): -4 to 120 °F (-29 to 49 °C) Relative humidity: 10 to 93%, noncondensing
Agency listings	UL, ULC, CSFM, FM, MEA

Specifications, test stations

Remote Test/Reset Stations provide alarm test, trouble indication, and reset capability from a remote location. They include a one-gang plate, momentary SPST switch, red alarm LED, and terminal block. Magnetically-operated models (TRM) or key-operated models (TRK) are available.

Compatible electrical boxes	North American 1-gang box Standard 4-in square box, 1-1/2 inches deep, with 1-gang cover
LED indicators	Alarm (red)
LED type	Clear lens
Wire size	14 to 22 AWG
Resistance per wire	10 Ohms, max.
Current requirements	See controller specifications
LED circuit ratings	Voltage: 3 Vdc, max. Current: 30 mA, max.
Switch ratings (SD-TRK)	Voltage: 125 Vdc, max. Current: 4 A, max.
Switch ratings (SD-TRM)	Voltage: 200 Vdc, max. Current: 0.5 A, max.
Compatible detectors	SuperDuct conventional two-wire and Signature duct smoke detectors
Operating environment	-4°F to 158°F (-20°C to 70°C) Humidity: 93% RH, noncondensing
Storage temperature	-4 to 140 °F (-20 to 60 °C)
Agency listings	UL, ULC, MEA, CSFM

Ordering Information

Catalog Number	Description	Ship Wt., lb. (kg)
SIGA-SD	Intelligent SuperDuct Detector	2.4 (1.1)
Accessories		
SD-T8	8-inch sampling tube	0.5 (0.2)
SD-T18	18-inch sampling tube	1.5 (0.7)
SD-T24	24-inch sampling tube	2.7 (1.2)
SD-T36	36-inch sampling tube	3.0 (1.4)
SD-T42	42-inch sampling tube	3.5 (1.6)
SD-T60	60-inch sampling tube	5.8 (2.6)
SD-T78	78-inch sampling tube	7.5 (3.4)
SD-T120	120-inch sampling tube	11.5 (5.2)
SD-PH	Protective housing for high humidity environments	5.5 (2.5)
SIGA-LED	Remote alarm LED	1.0 (0.5)
SD-TRM	Remote test station, magnetic	1.0 (0.5)
SD-TRK	Remote test station, keyed	1.0 (0.5)
SD-VTK	Air velocity test kit (stoppers only, etc)	1.0 (0.5)
SD-GSK	Cover gasket kit	0.5 (0.2)
SD-MAG	Test magnet kit	0.5 (0.2)
SIGA-SDPCB	Replacement PCB/Signature sensor kit	1.0 (0.5)

CALIFORNIA DEPARTMENT OF FORESTRY & FIRE PROTECTION
OFFICE OF THE STATE FIRE MARSHAL
FIRE ENGINEERING & INVESTIGATIONS DIVISION
BUILDING MATERIALS LISTING PROGRAM

LISTING SERVICE

LISTING No.:	3242-1657:0223
CATEGORY:	3242 - DUCT SMOKE DETECTOR, PHOTO. (W/ OR W/O BASE)
LISTEE:	EDWARDS, A Division of UTC Fire & Security Americas Corporation, Inc. 8985 Town Center Parkway, Bradenton, FL, 34202 Contact: Rodgers, Teresa 941-739-4225 Email: teresa.rodgers@carrier.com
DESIGN:	Models ESD-SJ, ESD-ST, TSD-SJ, TSD-ST, TSD-SJG, TSD-SJCO2, TSD-STCO2, SIGA-SD, SD-2W, ESD-2W, E-PDD, and FX-PDD photoelectric type duct smoke detectors. The duct detector consists of a thermoplastic enclosure, recognized component printed wiring board, a listed duct detector subassembly, and an inlet coupling tube and an exhaust tube along with gaskets. Refer to listee's data sheet for additional detailed product description and operational considerations.
RATING:	15.2-19.95 VDC 16-30 VDC: SD-2W, ESD-2W
INSTALLATION:	In accordance with listee's printed installation instructions and applicable codes and ordinances and in a manner acceptable to the authority having jurisdiction.
MARKING:	Listee's name, model number, electrical rating, and UL label.
APPROVAL:	Listed as photoelectric type, duct smoke detectors for use with separately listed compatible fire alarm control units in conjunction with Models ESD-CJ, -CT or TSD-CJ, -CT series duct smoke detector controller (CSFM Listing No. 3240-1657:225). Models SIGA-SD, E-PDD, FX-PDD, SD-2W or ESD-2W does not require a listed duct smoke detector controller. Suitable for use in ducts where air velocity is between 100 and 4000 ft/min. *Models ESD-SJ, ESD-ST, TSD-SJ, TSD-SJG, TSD-SJCO2, SIGA-SD, SD-2W and ESD-2W are suitable for use in ambient temperatures of -4°F to 158°F. Refer to listee's Installation Instruction Manual for details.
NOTES:	1. CO2 sensing features were not examined. 2. Formerly 3242-1591:223

*Corrected 3-22-13
BH

CALIFORNIA DEPARTMENT OF FORESTRY & FIRE PROTECTION
OFFICE OF THE STATE FIRE MARSHAL
FIRE ENGINEERING & INVESTIGATIONS DIVISION
BUILDING MATERIALS LISTING PROGRAM

LISTING SERVICE

This listing is based upon technical data submitted by the applicant. OSFM Fire Engineering staff has reviewed the test results and/or other data but does not make an independent verification of any claims. This listing is not an endorsement or recommendation of the item listed. This listing should not be used to verify correct operational requirements or installation criteria. Refer to listee's data sheet, installation instructions and/or other suitable information sources.

Date Issued: 05/23/2025

Listing Expires: 06/30/2026

Authorized By: **Michael Huang**, Program Coordinator
Fire Engineering & Investigations Division

EDWARDS

LIFE SAFETY & INCIDENT MANAGEMENT

Input Modules

SIGA-CT1, SIGA-CT1HT, SIGA-CT2, SIGA-MCT2

FM APPROVED MEA

7300-1657: 0121

S3424

Overview

The SIGA-CT1 Single Input Module, SIGA-CT1HT High Temperature Single Input Module and SIGA-CT2/SIGA-MCT2 Dual Input Modules are intelligent analog addressable devices used to connect one or two Class B normally-open Alarm, Supervisory, or Monitor type dry contact Initiating Device Circuits (IDC).

The actual function of these modules is determined by the "personality code" selected by the installer. This code is downloaded to the module from the Signature loop controller during system configuration.

The input modules gather analog information from the initiating devices connected to them and convert it into digital signals. The module's on-board microprocessor analyzes the signal and decides whether or not to input an alarm.

The SIGA-CT1, SIGA-CT1HT and SIGA-CT2 mount to standard North American 1-gang electrical boxes, making them ideal for locations where only one module is required. Separate I/O and data loop connections are made to each module.

The SIGA-CT1HT module operates at an expanded temperature range of 32 ºF to 158 ºF (0 ºC to 70 ºC) for those applications requiring more extreme environmental temperature variation.

The SIGA-MCT2 is part of the UIO family of plug-in Signature Series modules. It functions identically to the SIGA-CT2, but takes advantage of the modular flexibility and easy installation that characterizes all UIO modules. Two- and six-module UIO motherboards are available. All wiring connections are made to terminal blocks on the motherboard. UIO assemblies may be mounted in EDWARDS enclosures.

Standard Features

- **Multiple applications**
  Including Alarm, Alarm with delayed latching (retard) for waterflow applications, Supervisory, and Monitor. The installer selects one of four "personality codes" to be downloaded to the module through the loop controller.
- **SIGA-CT1HT rated for high temperature environments**
  Suitable for attic installation and monitoring high temperature heat detectors.
- **Plug-in (UIO) or standard 1-gang mount**
  UIO versions allow quick installation where multiple modules are required. The 1-gang mount version is ideal for remote locations that require a single module.
- **Automatic device mapping**
  Signature modules transmit information to the loop controller regarding their circuit locations with respect to other Signature devices on the wire loop.
- **Electronic addressing**
  Programmable addresses are downloaded from the loop controller, a PC, or the SIGA-PRO Signature Program/Service Tool. There are no switches or dials to set.
- **Ground fault detection by address**
  Detects ground faults right down to the device level.

Signature Series Overview

The Signature Series intelligent analog-addressable system from EDWARDS Security is an entire family of multi-sensor detectors and mounting bases, multiple-function input and output modules, network and non-network control panels, and user-friendly maintenance and service tools. Analog information from equipment connected to Signature devices is gathered and converted into digital signals. An onboard microprocessor in each Signature device measures and analyzes the signal and decides whether or not to input an alarm. The microprocessor in each Signature device provides four additional benefits – Self-diagnostics and History Log, Automatic Device Mapping, and Fast, Stable Communication.

Self-diagnostics and History Log – Each Signature Series device constantly runs self-checks to provide important maintenance information. The results of the self-check are automatically updated and permanently stored in its non-volatile memory. This information is accessible for review any time at the control panel, PC, or using the SIGA-PRO Signature Program/ Service Tool.

Automatic Device Mapping –The Signature Data Controller (SDC) learns where each device's serial number address is installed relative to other devices on the circuit. The SDC keeps a map of all Signature Series devices connected to it. The Signature Series Data Entry Program also uses the mapping feature. With interactive menus and graphic support, the wired circuits between each device can be examined. Layout or "as-built" drawing information showing branch wiring (T-taps), device types and their address are stored on disk for printing hard copy.

Installation

SIGA-CT1, SIGA-CT1HT and SIGA-CT2: modules mount to North American 2½ inch(64 mm) deep 1-gang boxes and 1½ inch (38 mm) deep 4 inch square boxes with 1-gang covers and SIGA-MP mounting plates. The terminals are suited for #12 to #18 AWG (2.5 mm^2 to 0.75 mm^2) wire size.

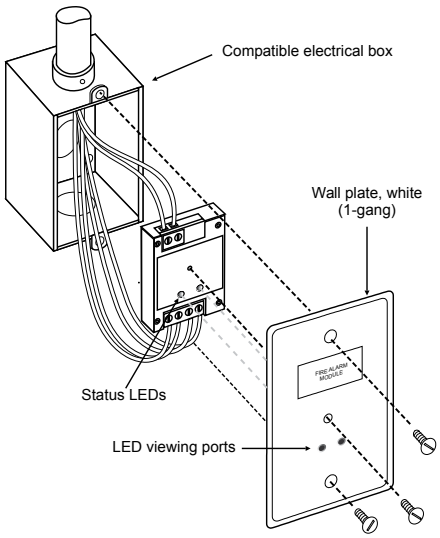

SIGA-MCT2: mount the UIO motherboard inside a suitable EDWARDS enclosure with screws and washers provided. Plug the SIGA-MCT2 into any available position on the motherboard and secure the module to the motherboard with the captive screws. Wiring connections are made to the terminals on the motherboard (see wiring diagram). UIO motherboard terminals are suited for #12 to #18 AWG (2.5 mm^2 to 0.75 mm^2) wire size.

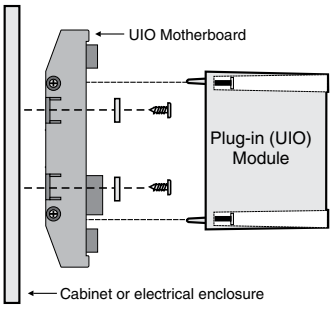

Electronic Addressing - The loop controller electronically addresses each module, saving valuable time during system commissioning. Setting complicated switches or dials is not required. Each module has its own unique serial number stored in its on-board memory. The loop controller identifies each device on the loop and assigns a "soft" address to each serial number. If desired, the modules can be addressed using the SIGA-PRO Signature Program/Service Tool.

EDWARDS recommends that this module be installed according to latest recognized edition of national and local fire alarm codes.

Application

The duty performed by the SIGA-CT1 and SIGA-CT2/MCT2 is determined by their sub-type code or "Personality Code". The code is selected by the installer depending upon the desired application and is downloaded from the loop controller.

One personality code can be assigned to the SIGA-CT1. Two personality codes can be assigned to the SIGA-CT2/MCT2. Codes 1, 2, 3 and 4 can be mixed on SIGA-CT2/MCT2 modules only. For example, personality code 1 can be assigned to the first address (circuit A) and code 4 can be assigned to the second address (circuit B).

NORMALLY-OPEN ALARM - LATCHING (Personality Code 1) - Assign to one or both circuits. Configures either circuit A or B or both for Class B normally open dry contact initiating devices such as Pull Stations, Heat Detectors, etc. An ALARM signal is sent to the loop controller when the input contact is closed. The alarm condition is latched at the module.

NORMALLY-OPEN ALARM - DELAYED LATCHING (Personality Code 2) - Assign to one or both circuits. Configures either circuit A or B or both for Class B normally-open dry contact initiating devices such as Waterflow Alarm Switches. An ALARM signal is sent to the loop controller when the input contact is closed for approximately 16 seconds. The alarm condition is latched at the module.

NORMALLY-OPEN ACTIVE - NON-LATCHING (Personality Code 3) - Assign to one or both circuits. Configures either circuit A or B or both for Class B normally-open dry contact monitoring input such as from Fans, Dampers, Doors, etc. An ACTIVE signal is sent to the loop controller when the input contact is closed. The active condition is not latched at the module.

NORMALLY-OPEN ACTIVE - LATCHING (Personality Code 4) - Assign to one or both circuits. Configures either circuit A or B or both for Class B normally open dry contact monitoring input such as from Supervisory and Tamper Switches. An ACTIVE signal is sent to the loop controller when the input contact is closed. The active condition is latched at the module.

Typical Wiring

Modules will accept #18 AWG (0.75mm²), #16 (1.0mm²), and #14AWG (1.50mm²), and #12 AWG (2.50mm²) wire sizes.

Note: Sizes #16 AWG (1.0mm²) and #18 AWG (0.75mm²) are preferred for ease of installation. See Signature Loop Controller catalog sheet for detailed wiring requirement specifications.

Initiating (Slave) Device Circuit Wire Specifications		
Maximum Allowable Wire Resistance	50 ohms (25 ohms per wire) per Circuit	
Maximum Allowable Wire Capacitance	0.1µF per Circuit	
For Design Reference:	**Wire Size**	**Maximum Distance to EOLR**
	#18 AWG (0.75 mm²)	4,000 ft (1,219 m)
	#16 AWG (1.00 mm²)	
	#14 AWG (1.50 mm²)	
	#12 AWG (1.50 mm²)	

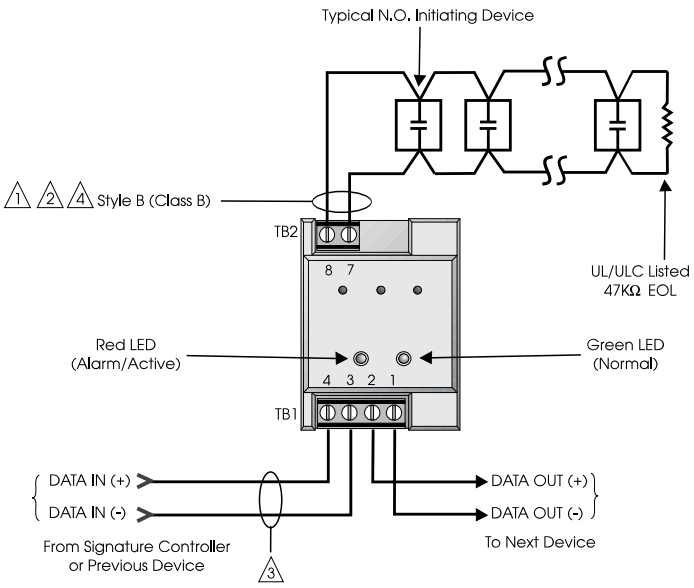

SIGA-CT1, SIGA-CT1HT

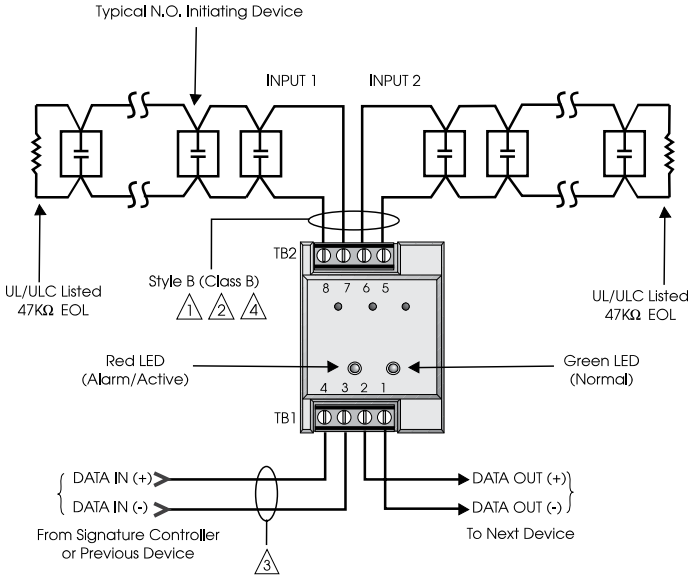

SIGA-CT2

NOTES

1. **Maximum 25 Ohm resistance per wire.**
2. **Maximum #12 AWG (2.5 mm²) wire; Minimum #18 AWG (0.75 mm2).**
3. **Refer to Signature controller installation sheet for wiring specifications.**
4. **Maximum 10 Vdc @ 350 µA**
5. **The SIGA-UIO6R and the SIGA-UIO2R do not come with TB14.**
6. **All wiring is supervised and power-limited.**
7. **These modules will not support 2-wire smoke detectors.**

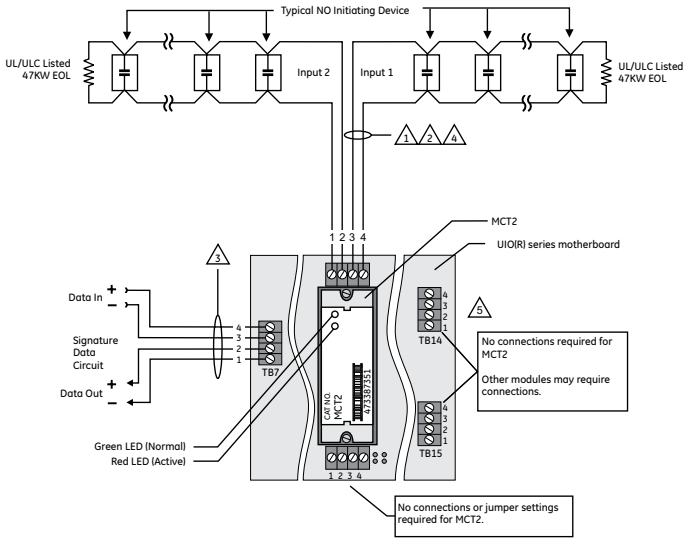

SIGA-MCT2

Warnings & Cautions

This module will not operate without electrical power. As fires frequently cause power interruption, we suggest you discuss further safeguards with your local fire protection specialist.

Compatibility

These modules are part of EDWARDS's Signature Series intelligent processing and control platform. They are compatible with EST3, EST3X and iO Series control panels.

EDWARDS

LIFE SAFETY & INCIDENT MANAGEMENT

Contact us

Phone: 800-655-4497 (Option 4)
Email: edwards.fire@carrier.com
Website: edwardsfiresafety.com

8985 Town Center Pkwy
Bradenton, FL 34202

© 2020 Carrier
All rights reserved.

Specifications

Catalog Number	SIGA-CT1HT	SIGA-CT1	SIGA-CT2	SIGA-MCT2
Description	Single Input Module		Dual Input Module	
Type Code	48 (factory set) Four sub-types (personality codes) are available		49 (factory set) Four sub-types (personality codes) are available	
Address Requirements	Uses One Module Address		Uses Two Module Addresses	
Operating Current	Standby = 250µA; Activated = 400µA		Standby = 396µA; Activated = 680µA	
Operating Voltage	15.2 to 19.95 Vdc (19 Vdc nominal)			
Construction	High Impact Engineering Polymer			
Mounting	North American 2½ inch (64 mm) deep one-gang boxes and 1½ inch (38 mm) deep 4 inch square boxes with one-gang covers and SIGA-MP mounting plates			UIO2R/6R/6 Motherboard
Operating Environment	32°F to 158°F (0°C to 70°C)	32°F to 120°F (0°C to 49°C)		
Storage Environment	-4°F to 140°F (-20°C to 60°C); Humidity: 0 to 93% RH			
LED Operation	On-board Green LED - Flashes when polled; On-board Red LED - Flashes when in alarm/active.			
Compatibility	Use with Signature Loop Controller			
Agency Listings	UL, ULC, MEA, CSFM			

Ordering Information

Catalog Number	Description	Ship Wt. lbs (kg)
SIGA-CT1	Single Input Module — UL/ULC Listed	0.4 (0.15)
SIGA-CT1HT	Single Input Module High Temperature Operation UL/ULC Listed	0.4 (0.15)
SIGA-CT2	Dual Input Module — UL/ULC Listed	0.4 (0.15)
SIGA-MCT2	Dual Input Plug-in (UIO) Module — UL, ULC Listed	0.1 (0.05)

Related Equipment		
27193-11	Surface Mount Box - Red, 1-gang	1.0 (0.6)
27193-16	Surface Mount Box - White, 1-gang	1.0 (0.6)
SIGA-UIO2R	Universal Input-Output Module Board w/Riser Inputs — Two Module Positions	0.32 (0.15)
SIGA-UIO6R	Universal Input-Output Module Board w/Riser Inputs — Six Module Positions	0.62 (0.28)
SIGA-UIO6	Universal Input-Output Module Board — Six Module Positions	0.56 (0.25)
MFC-A	Multifunction Fire Cabinet — Red, supports Signature Module Mounting Plates	7.0 (3.1)
SIGA-MB4	Transponder Mounting Bracket (allows for mounting two 1-gang modules in a 2-gang box)	0.4 (0.15)
SIGA-MP1	Signature Module Mounting Plate, 1 footprint	1.5 (0.70)
SIGA-MP2	Signature Module Mounting Plate, 1/2 footprint	0.5 (0.23)
SIGA-MP2L	Signature Module Mounting Plate, 1/2 extended footprint	1.02 (0.46)

CALIFORNIA DEPARTMENT OF FORESTRY & FIRE PROTECTION
OFFICE OF THE STATE FIRE MARSHAL
FIRE ENGINEERING & INVESTIGATIONS DIVISION
BUILDING MATERIALS LISTING PROGRAM

LISTING SERVICE

LISTING No.:	7300-1657:0121
CATEGORY:	7300 - FIRE ALARM CONTROL UNIT ACCESSORIES/MISC. DEVICES
LISTEE:	EDWARDS, A Division of UTC Fire & Security Americas Corporation, Inc. 8985 Town Center Parkway, Bradenton, FL, 34202 Contact: Rodgers, Teresa 941-739-4225 Email: teresa.rodgers@carrier.com
DESIGN:	Models SIGA-CC1, SIGA-CC2, SIGA-CT1, SIGA-CT1HT, SIGA-CT2, SIGA-CR, SIGA-CRR, SIGA-UM, SIGA-MM1, SIGA-WTM, SIGA-IM, *SIGA-IM2, SIGA-MDM, SIGA-MAB, SIGA-MCT2, SIGA-MCC1, SIGA-MCC2, SIGA-MCR, and SIGA-MCRR Remote Transponders. Models SIGA-AA30 and SIGA-AA50 audio amplifiers. Models SIGA-APS and SIGA-APS-220 power supplies. Models SIGA-MB4, SIGA-MP1, SIGA-MP2 and SIGA-MP2L mounting plates. Models SIGA-UIO2R, SIGA-UIO6 and SIGA-UIO6R motherboards. Model CS-SIGA-CC1P releasing module. Models SIGA-CC1S and SIGA-MCC1S Auto-Sync Output Modules. Models MFC-A and MFC-AD Enclosures. Model SIGA-CR2 Control Relay Module. Model SIGA-CT1HT Signature Series High Temperature Single Input Module. SIGA-CRH High Power Control Relay Module. Refer to listee's data sheet for additional detailed product description and operational consideration.
RATING:	15.2 - 19.95 VDC
INSTALLATION:	In accordance with listee's printed installation instructions, applicable codes and ordinances, and in a manner acceptable to the authority having jurisdiction.
MARKING:	Listee's name, model number, electrical rating, and UL label.
APPROVAL:	Listed as control unit accessories for use with separately listed compatible fire alarm control units. Refer to listee’s Installation Instruction Manual for details.
NOTES:	Formerly 7300-1591:121 and 7300-1388:178

*Revision 10-30-20 VWW

CALIFORNIA DEPARTMENT OF FORESTRY & FIRE PROTECTION
OFFICE OF THE STATE FIRE MARSHAL
FIRE ENGINEERING & INVESTIGATIONS DIVISION
BUILDING MATERIALS LISTING PROGRAM

LISTING SERVICE

This listing is based upon technical data submitted by the applicant. OSFM Fire Engineering staff has reviewed the test results and/or other data but does not make an independent verification of any claims. This listing is not an endorsement or recommendation of the item listed. This listing should not be used to verify correct operational requirements or installation criteria. Refer to listee's data sheet, installation instructions and/or other suitable information sources.

Date Issued: 05/22/2025

Listing Expires: 06/30/2026

Authorized By: **Michael Huang**, Program Coordinator
Fire Engineering & Investigations Division

EDWARDS

LIFE SAFETY & INCIDENT MANAGEMENT

Control Relay Modules

SIGA-CR, SIGA-MCR, SIGA-CRR, SIGA-MCRR

SIGA-MCR

SIGA-CR

FM APPROVED MEA 7300-1657: 0121 S3424

Overview

The Control Relay Module and the Polarity Reversal Relay Module are part of the Signature Series system. They are intelligent analog addressable devices available in either plug-in (UIO) versions, or standard 1-gang mount versions.

The SIGA-CR/MCR Control Relay Module provides a Form "C" dry relay contact to control external appliances such as door closers, fans, dampers etc. This device does not provide supervision of the state of the relay contact. Instead, the on-board microprocessor ensures that the relay is in the proper ON/OFF state. Upon command from the loop controller, the SIGA-CR/MCR relay activates the normally open or normally-closed contact.

The SIGA-CRR/MCRR Polarity Reversal Relay Module provides a Form "C" dry relay contact to power and activate a series of SIGA-AB4G Audible Sounder Bases. Upon command from the Signature loop controller, the SIGA-CRR reverses the polarity of its 24 Vdc output, thus activating all Sounder Bases on the data loop.

Standard-mount versions (SIGA-CR and SIGA-CRR) are installed to standard North American 1-gang electrical boxes, making them ideal for locations where only one module is required. Separate I/O and data loop connections are made to each module.

Plug-in UIO versions (SIGA-MCR and SIGA-MCRR) are part of the UIO family of plug-in Signature Series modules. They function identically to the standard mount versions, but take advantage of the modular flexibility and easy installation that characterizes all UIO modules. Two- and six-module UIO motherboards are available. All wiring connections are made to terminal blocks on the motherboard. UIO assemblies may be mounted in EDWARDS enclosures.

Standard Features

- **Provides one no/nc contact (SIGA-CR/MCR)**
  Form "C" dry relay contact can be used to control external appliances such as door closers, fans, dampers etc.
- **Allows group operation of sounder bases**
  The SIGA-CRR/MCRR reverses the polarity of its 24 Vdc output, thus activating all Sounder Bases on the data loop.
- **Plug-in (UIO) or standard 1-gang mount**
  UIO versions allow quick installation where multiple modules are required. The 1-gang mount version is ideal for remote locations that require a single module.
- **Automatic device mapping**
  Signature modules transmit information to the loop controller regarding their circuit locations with respect to other Signature devices on the wire loop.
- **Electronic addressing**
  Programmable addresses are downloaded from the loop controller, a PC, or the SIGA-PRO Signature Program/Service Tool; there are no switches or dials to set.
- **Intelligent device with microprocessor**
  All decisions are made at the module to allow lower communication speed with substantially improved control panel response time and less sensitivity to line noise and loop wiring properties; twisted or shielded wire is not required.

Installation

SIGA-CR and SIGA-CRR: modules mount to North American 2½ inch (64 mm) deep 1-gang boxes and 1½ inch (38 mm) deep 4 inch square boxes with 1-gang covers and SIGA-MP mounting plates. The terminals are suited for #12 to #18 AWG (2.5 mm^2 to 0.75 mm^2) wire size.

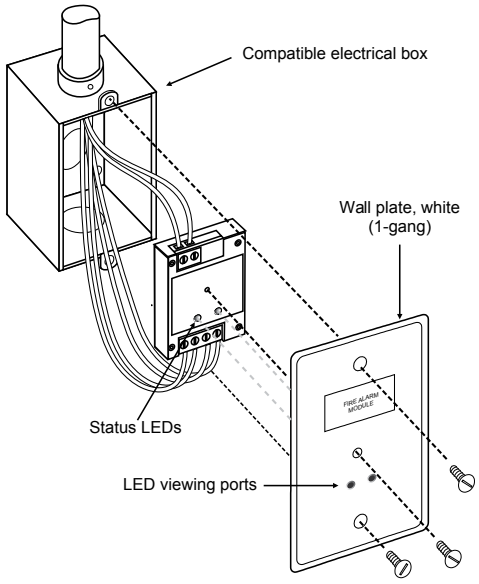

SIGA-MCR and SIGA-MCRR: mount the UIO motherboard inside a suitable EDWARDS enclosure with screws and washers provided. Plug the module into any available position on the motherboard and secure the module to the motherboard with the captive screws. Wiring connections are made to the terminals on the motherboard (see wiring diagram). UIO motherboard terminals are suited for #12 to #18 AWG (2.5 mm^2 to 0.75 mm^2) wire size.

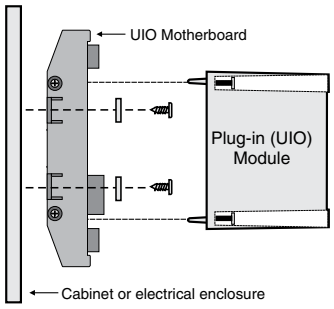

Electronic Addressing - The loop controller electronically addresses each module, saving valuable time during system commissioning. Setting complicated switches or dials is not required. Each module has its own unique serial number stored in its on-board memory. The loop controller identifies each device on the loop and assigns a "soft" address to each serial number. If desired, the modules can be addressed using the SIGA-PRO Signature Program/Service Tool.

EDWARDS recommends that this module be installed according to latest recognized edition of national and local fire alarm codes.

Application

The operation of Signature Series control relays is determined by their sub-type code or "Personality Code."

Personality Code 8: CONTROL RELAY (SIGA-CR/MCR) - Dry Contact Output. This setting configures the module to provide one Form "C" DRY RELAY CONTACT to control Door Closers, Fans, Dampers, etc. Contact rating is 2.0 amp @ 24 Vdc; 0.5 amp @ 120 Vac (or 0.25A @ 220 Vac for non-UL applications). Personality Code 8 is assigned at the factory. No user configuration is required.

Personality Code 8: POLARITY REVERSAL RELAY MODULE (SIGA-CRR/MCRR). This setting configures the module to reverse the polarity of its 24 Vdc output. Contact rating is 2.0 amp @ 24 Vdc (pilot duty). Personality Code 8 is assigned at the factory. No user configuration is required.

Compatibility

These modules are part of EDWARDS's Signature Series intelligent processing and control platform. They are compatible with EST3, EST3X and iO Series control panels.

Warnings & Cautions

This module will not operate without electrical power. As fires frequently cause power interruption, we suggest you discuss further safeguards with your local fire protection specialist.

Testing & Maintenance

The module's automatic self-diagnosis identifies when it is defective and causes a trouble message. The user-friendly maintenance program shows the current state of each module and other pertinent messages. Single modules may be turned off (deactivated) temporarily, from the control panel. Availability of maintenance features is dependent on the fire alarm system used. Scheduled maintenance (Regular or Selected) for proper system operation should be planned to meet the requirements of the Authority Having Jurisdiction (AHJ). Refer to current NFPA 72 and ULC CAN/ULC 536 standards.

Typical Wiring

Modules will accept #18 AWG (0.75mm²), #16 (1.0mm²), #14 AWG (1.50mm²) and #12 AWG (2.5mm²) wire sizes.

Note: Sizes #16 AWG (1.0mm²) and #18 AWG (0.75mm²) are preferred for ease of installation. See Signature Loop Controller catalog sheet for detailed wiring requirement specifications.

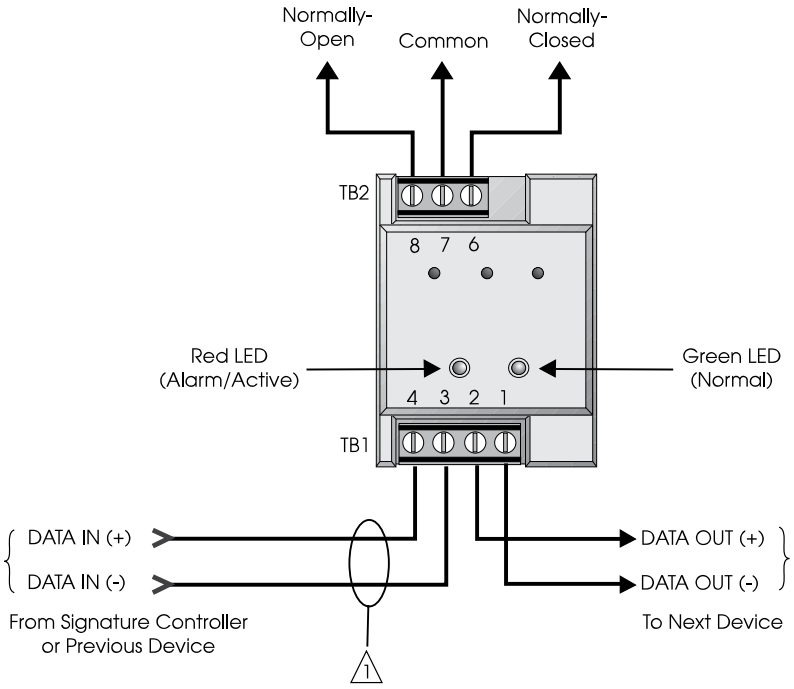

SIGA-CR Control Relay

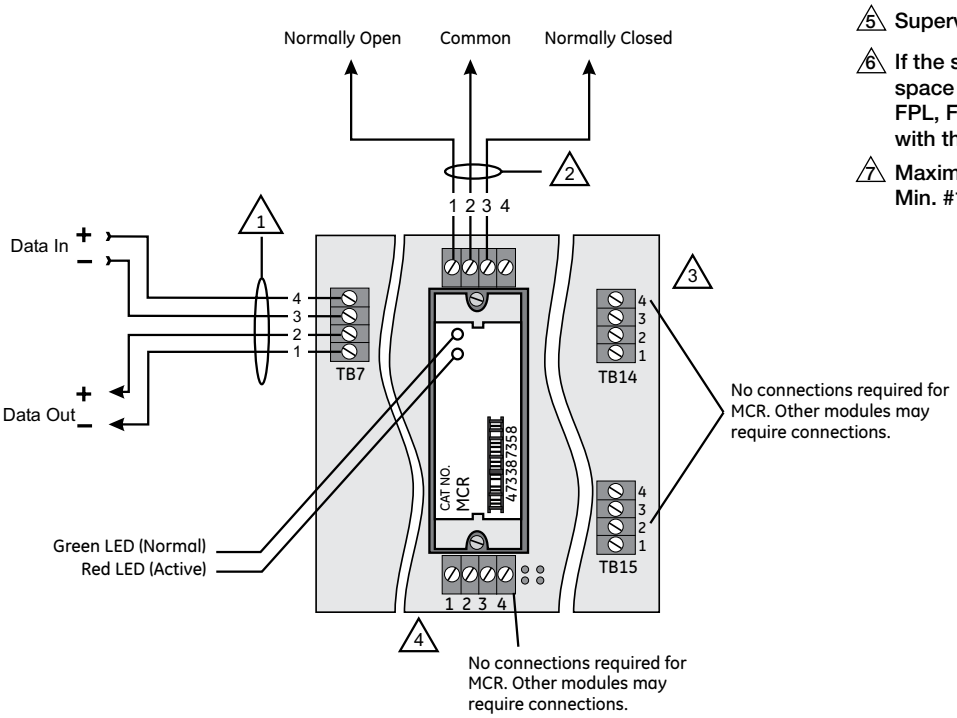

SIGA-MCR Control Relay

Notes

1. Refer to Signature Loop Controller Installation Sheet for wiring specifications.
2. NFPA 72 requires that the SIGA-CR/SIGA-MCR be installed in the same room as the device it is controlling. This requirement may not apply in all markets. Check with your local AHJ for details.
3. The SIGA-UIO6R and the SIGA-UIO2R do not come with TB14.
4. The SIGA-UIO6 does not come with TB8 through TB13.
5. Supervised and power-limited.
6. If the source is nonpower-limited, maintain a space of 1/4 inch from power-limited wiring or use FPL, FPLP, FPLR, or an equivalent in accordance with the National Electrical Code.
7. Maximum #12 AWG (2.5mm²) wire. Min. #18 (0.75mm²).

Typical Wiring

Modules will accept #18 AWG (0.75mm²), #16 (1.0mm²), #14 AWG (1.50mm²) and #12 AWG (2.50mm²) wire sizes.

Note: Sizes #16 AWG (1.0mm²) and #18 AWG (0.75mm²) are preferred for ease of installation. See Signature Loop Controller catalog sheet for detailed wiring requirement specifications.

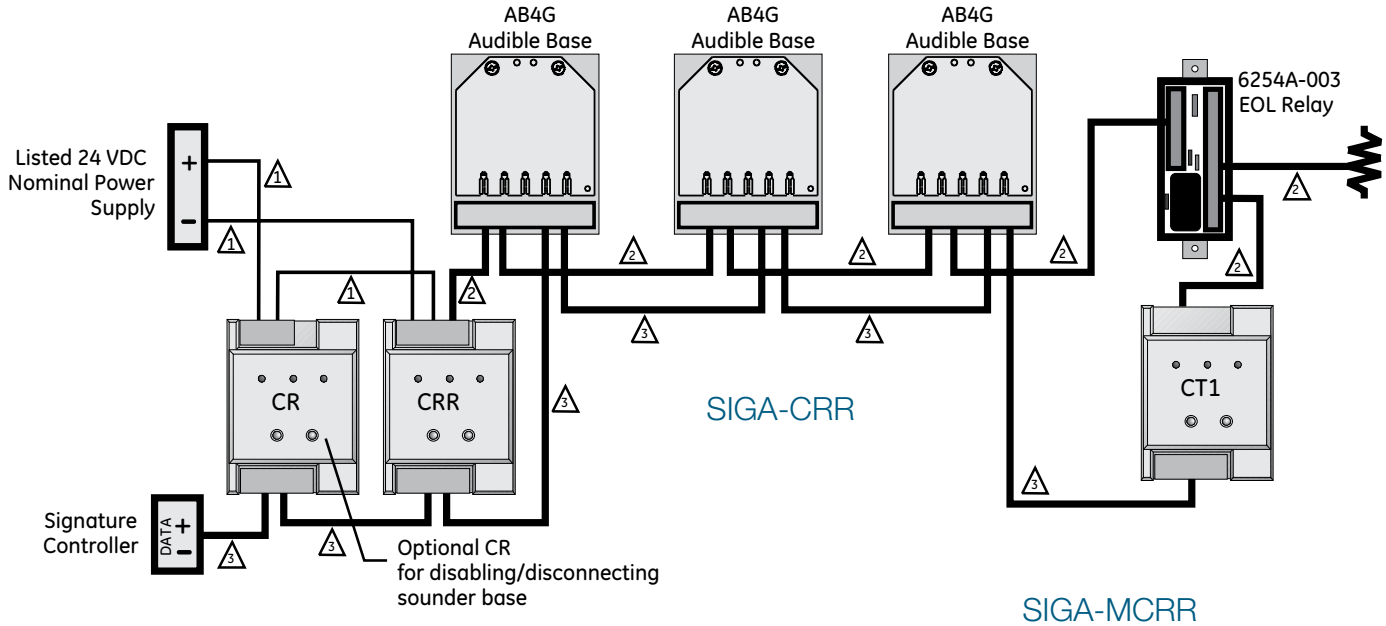

SIGA-MCRR

SIGA-CRR Schematic

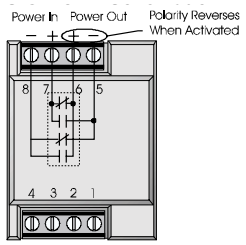

SIGA-MCRR Schematic

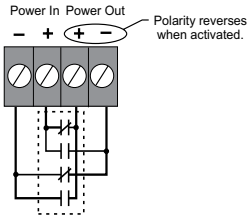

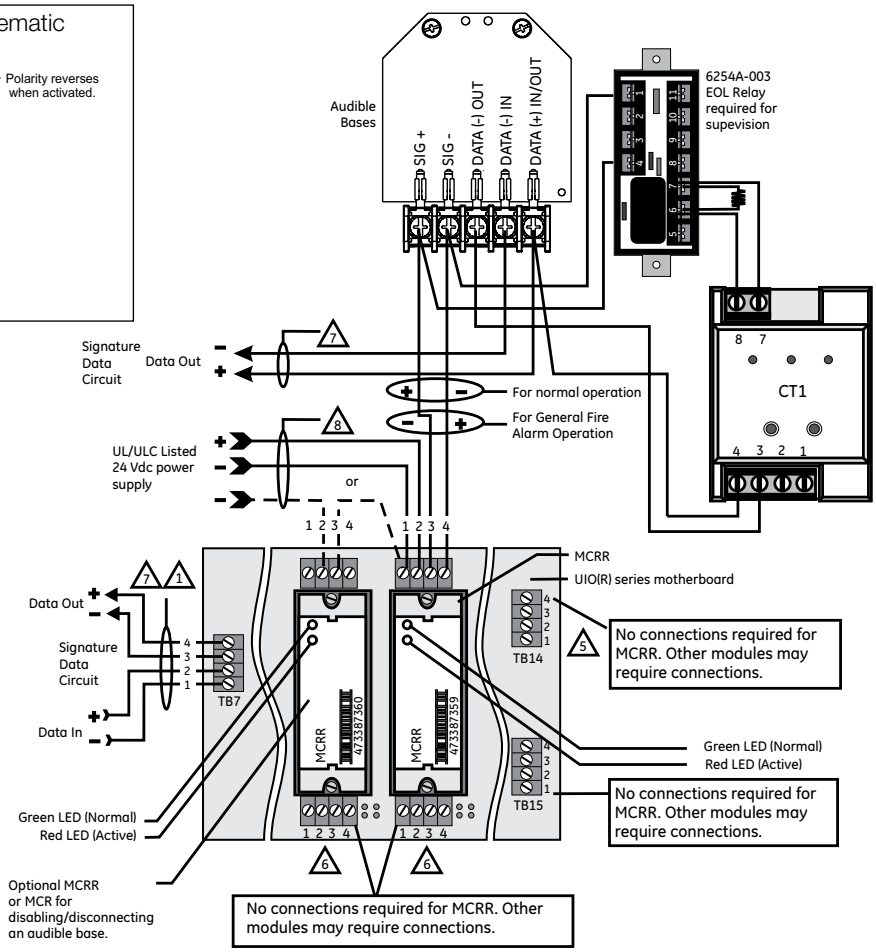

Notes

1. Refer to the Signature controller installation sheet for wiring.
2. One Pair of Wires (24 Vdc power).
3. One Pair of Wires (Signature Data).
4. Single Wire (24 Vdc power).
5. The SIGA-UIO6R and the SIGA-UIO2R do not come with TB14.
6. The SIGA-UIO6 does not come with TB8 through TB13.
7. Supervised and power-limited.
8. If the source is nonpower-limited, maintain a space of 1/4 inch from power-limited wiring or use FPL, FPLP, FPLR, or an equivalent in accordance with the National Electrical Code.
9. Maximum #12 AWG (2.5 mm²) wire; Minimum #18 AWG (0.75 mm²).
10. End-of-Line Relay must monitor and report power supply trouble to control panel.
11. Class B Data wiring may be "T-tapped."

Specifications

Catalog Number	SIGA-CR	SIGA-MCR	SIGA-CRR	SIGA-MCRR
Description	Control Relay		Polarity Reversal Relay	
Type Code	Personality Code 8 (Factory Set)		Personality Code 8 (Factory Set)	
Address Requirements	Uses 1 Module Address			
Operating Current	Standby = 75 µA Activated = 75 µA			
Operating Voltage	15.2 to 19.95 Vdc (19 Vdc nominal)			
Relay Type and Rating	Form C, 2 Amps @ 24 Vdc (pilot duty), 0.5 Amps @ 120 Vac and 0.25 Amps @ 220 Vac (220 Vac is non-UL) Not rated for capacitive loads.			
Mounting	North American 2½ inch (64 mm) deep 1-gang boxes and 1½ inch (38 mm) deep 4 inch square boxes with 1-gang covers and SIGA-MP mounting plates	Plugs into UIO2R, UIO6R or UIO6 Motherboards	North American 2½ inch (64 mm) deep 1-gang boxes and 1½ inch (38 mm) deep 4 inch square boxes with 1-gang covers and SIGA-MP mounting plates	Plugs into UIO2R, UIO6R or UIO6 Motherboards
Construction & Finish	High Impact Engineering Polymer			
Storage and Operating Environment	Operating Temperature: 32°F to 120°F (0°C to 49°C) Storage Temperature: -4°F to 140°F (-20°C to 60°C) Humidity: 0 to 93% RH			
LED Operation	On-board Green LED - Flashes when polled On-board Red LED - Flashes when in alarm/active			
Compatibility	Use With: Signature Loop Controller			
Agency Listings	UL, ULC, CSFM, MEA			

Ordering Information

Catalog Number	Description	Ship Weight - lbs (kg)
SIGA-CR	Control Relay Module (Standard Mount)	0.4 (0.15)
SIGA-MCR	Control Relay Module (UIO Mount)	0.18 (0.08)
SIGA-CRR	Polarity Reversal Relay Module (Standard Mount)	0.4 (0.15)
SIGA-MCRR	Polarity Reversal Relay Module (UIO Mount)	0.18 (0.08)
Related Equipment		
27193-11	Surface Mount Box - Red, 1-gang	1 (0.6)
27193-16	Surface Mount Box - White, 1-gang	1 (0.6)
SIGA-UIO2R	Universal Input-Output Module Board w/Riser Inputs - Two Module Positions	0.32 (0.15)
SIGA-UIO6R	Universal Input-Output Module Board w/Riser Inputs - Six Module Positions	0.62 (0.28)
SIGA-UIO6	Universal Input-Output Module Board - Six Module Positions	0.56 (0.25)
SIGA-AB4G	Audible (Sounder) Detector Base	0.3 (0.15)
Accessories		
MFC-A	Multifunction Fire Cabinet - Red, supports Signature Module Mounting Plates	7.0 (3.1)
SIGA-MB4	Transponder Mounting Bracket (allows for mounting two 1-gang modules in a 2-gang box)	0.4 (0.15)
SIGA-MP1	Signature Module Mounting Plate, 1 footprint	1.5 (0.70)
SIGA-MP2	Signature Module Mounting Plate, 1/2 footprint	0.5 (0.23)
SIGA-MP2L	Signature Module Mounting Plate, 1/2 extended footprint	1.02 (0.46)

LIFE SAFETY & INCIDENT MANAGEMENT

Contact us

Phone: 800-655-4497 (Option 4)
Email: edwards.fire@carrier.com
Website: edwardsfiresafety.com

8985 Town Center Pkwy
Bradenton, FL 34202

© 2020 Carrier
All rights reserved.

Signature Series Overview

The Signature Series intelligent analog-addressable system from EDWARDS is an entire family of multi-sensor detectors and mounting bases, multiple-function input and output modules, network and non-network control panels, and user-friendly maintenance and service tools. Analog information from equipment connected to Signature devices is gathered and converted into digital signals. An onboard microprocessor in each Signature device measures and analyzes the signal and decides whether or not to input an alarm. The microprocessor in each Signature device provides four additional benefits – Self-diagnostics and History Log, Automatic Device Mapping, and Fast, Stable Communication.

Self-diagnostics and History Log – Each Signature Series device constantly runs self-checks to provide important maintenance information. The results of the self-check are automatically updated and permanently stored in its non-volatile memory. This information is accessible for review any time at the control panel, PC, or using the SIGA-PRO Signature Program/Service Tool. The information stored in device memory includes:

- Device serial number, address, and type
- Time and date of last alarm
- Most recent trouble code logged by the detector — 32 possible trouble codes may be used to diagnose faults.

Automatic Device Mapping –The Signature Data Controller (SDC) learns where each device's serial number address is installed relative to other devices on the circuit. The SDC keeps a map of all Signature Series devices connected to it. The Signature Series Data Entry Program also uses the mapping feature. With interactive menus and graphic support, the wired circuits between each device can be examined. Layout or "as-built" drawing information showing branch wiring (T-taps), device types and their address are stored on disk for printing hard copy. This takes the mystery out of the installation. The preparation of as-built drawings is fast and efficient.

Device mapping allows the Signature Data Controller to discover:

- Unexpected additional device addresses
- Missing device addresses
- Changes to the wiring in the circuit.

Most Signature modules use a personality code selected by the installer to determine their actual function. Personality codes are downloaded from the SDC during system configuration and are indicated during device mapping.

CALIFORNIA DEPARTMENT OF FORESTRY & FIRE PROTECTION
OFFICE OF THE STATE FIRE MARSHAL
FIRE ENGINEERING & INVESTIGATIONS DIVISION
BUILDING MATERIALS LISTING PROGRAM

LISTING SERVICE

LISTING No.:	7300-1657:0121
CATEGORY:	7300 - FIRE ALARM CONTROL UNIT ACCESSORIES/MISC. DEVICES
LISTEE:	EDWARDS, A Division of UTC Fire & Security Americas Corporation, Inc. 8985 Town Center Parkway, Bradenton, FL, 34202 Contact: Rodgers, Teresa 941-739-4225 Email: teresa.rodgers@carrier.com
DESIGN:	Models SIGA-CC1, SIGA-CC2, SIGA-CT1, SIGA-CT1HT, SIGA-CT2, SIGA-CR, SIGA-CRR, SIGA-UM, SIGA-MM1, SIGA-WTM, SIGA-IM, *SIGA-IM2, SIGA-MDM, SIGA-MAB, SIGA-MCT2, SIGA-MCC1, SIGA-MCC2, SIGA-MCR, and SIGA-MCRR Remote Transponders. Models SIGA-AA30 and SIGA-AA50 audio amplifiers. Models SIGA-APS and SIGA-APS-220 power supplies. Models SIGA-MB4, SIGA-MP1, SIGA-MP2 and SIGA-MP2L mounting plates. Models SIGA-UIO2R, SIGA-UIO6 and SIGA-UIO6R motherboards. Model CS-SIGA-CC1P releasing module. Models SIGA-CC1S and SIGA-MCC1S Auto-Sync Output Modules. Models MFC-A and MFC-AD Enclosures. Model SIGA-CR2 Control Relay Module. Model SIGA-CT1HT Signature Series High Temperature Single Input Module. SIGA-CRH High Power Control Relay Module. Refer to listee's data sheet for additional detailed product description and operational consideration.
RATING:	15.2 - 19.95 VDC
INSTALLATION:	In accordance with listee's printed installation instructions, applicable codes and ordinances, and in a manner acceptable to the authority having jurisdiction.
MARKING:	Listee's name, model number, electrical rating, and UL label.
APPROVAL:	Listed as control unit accessories for use with separately listed compatible fire alarm control units. Refer to listee’s Installation Instruction Manual for details.
NOTES:	Formerly 7300-1591:121 and 7300-1388:178

*Revision 10-30-20 VWW

CALIFORNIA DEPARTMENT OF FORESTRY & FIRE PROTECTION
OFFICE OF THE STATE FIRE MARSHAL
FIRE ENGINEERING & INVESTIGATIONS DIVISION
BUILDING MATERIALS LISTING PROGRAM

LISTING SERVICE

This listing is based upon technical data submitted by the applicant. OSFM Fire Engineering staff has reviewed the test results and/or other data but does not make an independent verification of any claims. This listing is not an endorsement or recommendation of the item listed. This listing should not be used to verify correct operational requirements or installation criteria. Refer to listee's data sheet, installation instructions and/or other suitable information sources.

Date Issued: 05/22/2025

Listing Expires: 06/30/2026

Authorized By: **Michael Huang**, Program Coordinator
Fire Engineering & Investigations Division

EDWARDS

LIFE SAFETY & INCIDENT MANAGEMENT

Synchronization Output Module

SIGA-CC1S, MCC1S

Patented

FM APPROVED MEA 7300-1657: 0121 UL ULC S3424

Overview

SIGA-CC1S and MCC1S Synchronization Output Modules are intelligent analog addressable devices that form part of EDWARDS's Signature line of products. The actual operation of the SIGA-CC1S and MCC1S is determined by the "personality code" selected by the installer, which is downloaded to the module from the Signature loop controller during system configuration.

Depending on their assigned personality, Synchronization Output Modules may be used as a signal power riser selector to provide synchronization of fire alarm signals across multiple zones, or for connecting, upon command from the loop controller, supervised Class B signal or telephone circuits to their respective power inputs. The power inputs may be polarized 24 Vdc to operate audible and visible signal appliances or 25 and 70 VRMS to operate audio evacuation speakers and firefighter's telephones.

Standard Features

- **Provides UL 1971-compliant auto-sync output for visual signals**
  Use for connecting a supervised output circuit to a supervised 24 Vdc riser input and synchronizing multiple notification appliance circuits.
- **Functions as an audible signal riser selector**
  Use as a synch module or for connecting supervised 24 Vdc Audible/Visible signal circuits, or 25 and 70 VRMS Audio Evacuation and Telephone circuits to their power inputs.
- **Built-in ring-tone generator**
  When configured for telephone circuits, the SIGA-CC1S generates its own ring-tone signal, eliminating the need for a separate ring-tone circuit.
- **Automatic device mapping**
  Signature modules transmit information to the loop controller regarding their circuit locations with respect to other Signature devices on the wire loop.
- **Electronic addressing**
  Programmable addresses are downloaded from the loop controller, a PC, or the SIGA-PRO Signature Program/Service Tool; there are no switches or dials to set.
- **Intelligent device with microprocessor**
  All decisions are made at the module to allow lower communication speed with substantially improved control panel response time and less sensitivity to line noise and loop wiring properties; twisted or shielded wire is not required.

Application

The SIGA-CC1S mounts to a standard North American two-gang electrical box, making it ideal for locations where only one module is required. Separate I/O and data loop connections are made to each module.

The SIGA-MCC1S is part of the UIO family of plug-in Signature Series modules. It functions identically to the SIGA-CC1S, but takes advantage of the modular flexibility and easy installation that characterize all UIO modules. Two- and six-module UIO motherboards are available. These can accommodate individual risers for each on-board module, or risers that are shared by any combination of its UIO modules. All wiring connections are made to terminal blocks on the motherboard. UIO assemblies may be mounted in EDWARDS enclosures.

Personality Codes

The operation of the SIGA-CC1S is determined by their sub-type code or "Personality Code". The code is selected by the installer depending upon the desired application and is downloaded from the loop controller.

Personality Code 5: Signal Power or Audio Evacuation (single riser). Configures the module for use as a Class B Audible/Visible Signal power (24 Vdc polarized) or Audio Evacuation (25 or 70 VRMS) power selector. The ring-tone generator is disabled. The output circuit is monitored for open or shorted wiring. If a short exists, the control panel inhibits the activation of the audible/visible signal circuit to prevent connection to the power circuit.

Personality Code 6: Telephone with ring-tone (single riser). Configures the module for use as a Telephone power selector. When a telephone handset is plugged into its jack or lifted from its hook, the module generates its own Ring-Tone signal. A separate ring-tone circuit is not needed. The module sends this signal to the control panel to indicate that an off-hook condition is present. When the system operator responds to the call, the ring-tone signal is disabled.

Personality Code 25: Visual Signal Synchronization. This personality code configures the module to provide synchronization of fire alarm signals across multiple zones. It functions as a signal power (24 Vdc) riser selector. The output wiring is monitored for open circuits and short circuits. A short circuit will cause the fire alarm control panel to inhibit the activation of the audible/visual signal circuit so the riser is not connected to the wiring fault.

Warnings & Cautions

This module will not operate without electrical power. As fires frequently cause power interruption, we suggest you discuss further safeguards with your fire protection specialist.

EDWARDS recommends that these modules be installed according to latest recognized edition of national and local fire alarm codes.

Compatibility

These modules are part of EDWARDS's Signature Series intelligent processing and control platform. They are compatible with EST3, EST3X and iO Series control panels.

Installation

The SIGA-CC1S: mounts to North American 2-1/2 inch (64 mm) deep 2-gang boxes and 1-1/2 inch (38 mm) deep 4 inch square boxes with 2-gang covers and SIGA-MP mounting plates. The terminals are suited for #12 to #18 AWG (2.5 mm^2 to 0.75 mm^2) wire size.

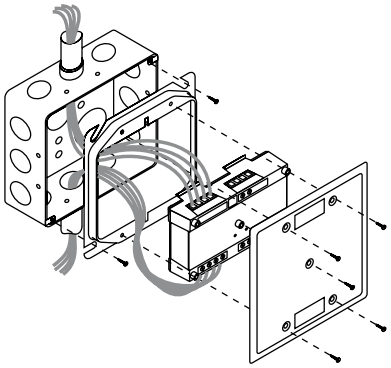

SIGA-MCC1S: mount the UIOxR motherboard inside a suitable EDWARDS enclosure with screws and washers provided. Plug the module into any available position on the motherboard and secure the module to the motherboard with the captive screws. Wiring connections are made to the terminals on the motherboard (see wiring diagram). UIOxR motherboard terminals are suited for #12 to #18 AWG (2.5 mm^2 to 0.75 mm^2) wire size.

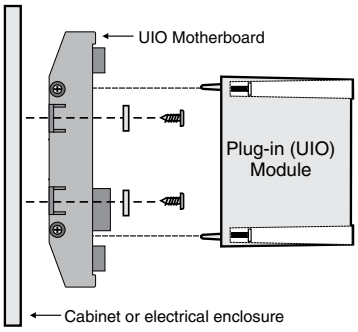

Electronic Addressing

The loop controller electronically addresses each module saving valuable time during system commissioning. Setting complicated switches or dials is not required. Each module has its own unique serial number stored in its "on-board memory". The loop controller identifies each device on the loop and assigns a "soft" address to each serial number. If desired, the modules can be addressed using the SIGA-PRO Signature Program/Service Tool.

Testing & Maintenance

The module's automatic self-diagnosis identifies when it is defective and causes a trouble message. The user-friendly maintenance program shows the current state of each module and other pertinent messages. Single modules may be turned off (de-activated) temporarily, from the control panel.

Scheduled maintenance (Regular or Selected) for proper system operation should be planned to meet the requirements of the Authority Having Jurisdiction (AHJ). Refer to current NFPA 72 and ULC CAN/ULC 536 standards.

Typical Wiring

SIGA-CC1S (Standard Mount)

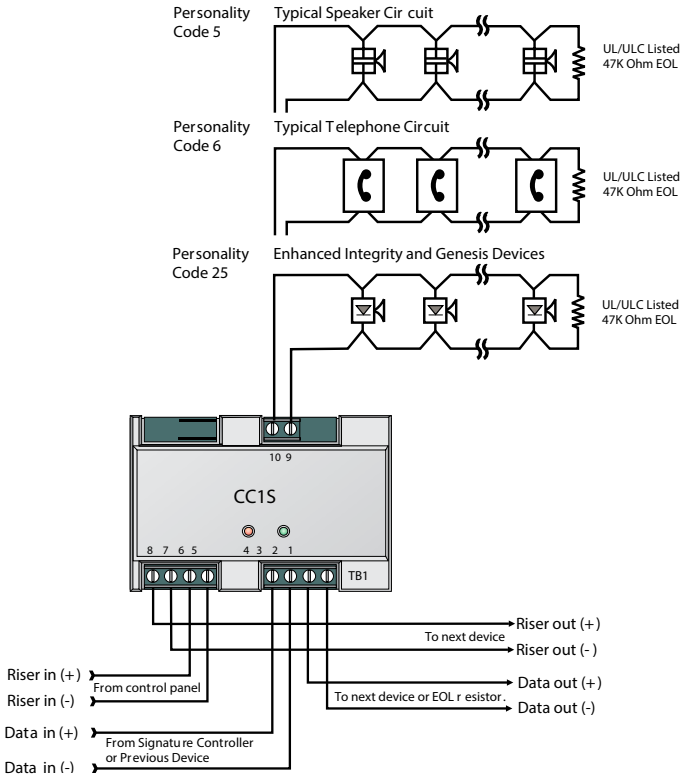

SIGA-MCC1S (UIO Mount)

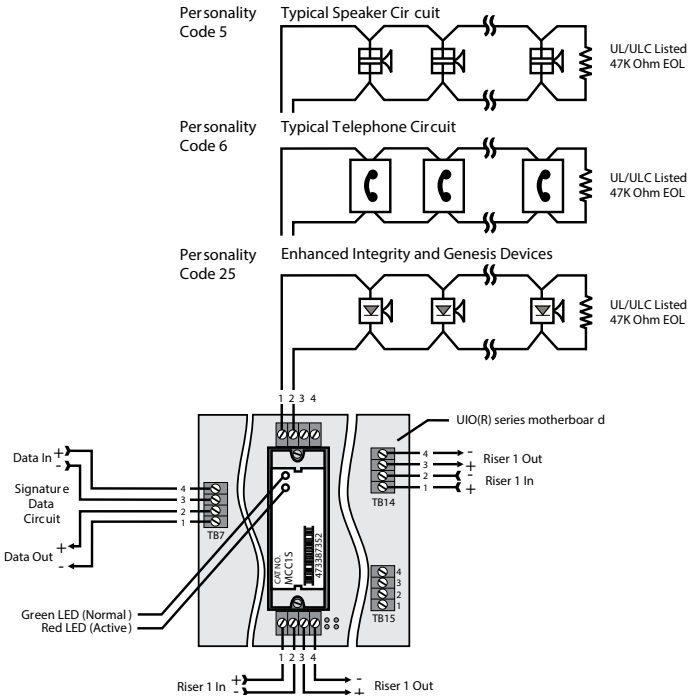

Multiple CC1(S) modules using the BPS's sense inputs

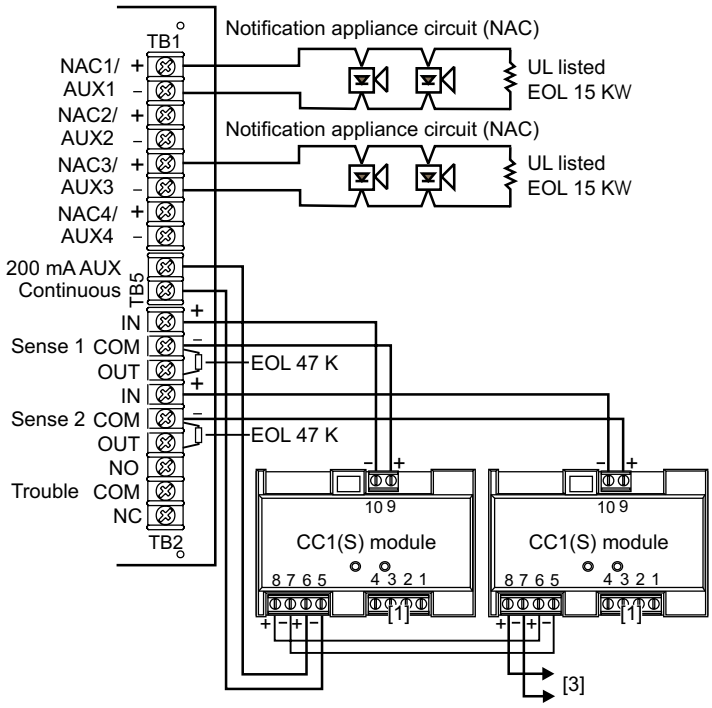

EDWARDS

LIFE SAFETY & INCIDENT MANAGEMENT

Contact us

Phone: 800-655-4497 (Option 4)
Email: edwards.fire@carrier.com
Website: edwardsfiresafety.com

8985 Town Center Pkwy
Bradenton, FL 34202

© 2020 Carrier
All rights reserved.

Specifications

Catalog Number	SIGA-CC1S	SIGA-MCC1S
Mounting	North American 2½ inch (64 mm) deep two-gang boxes and 1½ inch (38 mm) deep 4 inch square boxes with 2-gang covers and SIGA-MP mounting plates	Plugs into UIO2R, UIO6R or UIO6 Motherboards
Description	Synchronization Output Module	
Type Code	50 (factory set)	
Address Requirements	Uses one module address	
Wiring Terminations	Suitable for #12 to #18 AWG (2.5 mm² to 0.75mm²)	
Operating Current	Standby = 223µA Activated = 100µA	
Operating Voltage	15.2 to 19.95 Vdc (19 Vdc nominal)	
Output Rating	24 Vdc = 2 amps 25 V Audio = 50 watts 70 V Audio = 35 watts	
Construction	High Impact Engineering Polymer	
Storage and Operating Environment	Operating: 32°F to 120°F (0°C to 49°C) Storage: -4°F to 140°F (-20°C to 60°C) Humidity: 0 to 93% RH	
LED Operation	Green LED - Flashes when polled Red LED - Flashes when in alarm/ active	
Compatibility	Use with: Signature Loop Controller under EST3 version 2.0 or higher	
Agency Listings	UL, ULC, CSFM, MEA	

Ordering Information

Catalog Number	Description	Shipping Wt. lbs (kg)
SIGA-CC1S	Synchronization Output Module (Standard Mount) - UL/ULC Listed	0.5 (0.23)
SIGA-MCC1S	Synchronization Output Module (UIO Mount) - UL/ULC Listed	0.18 (0.08)
Related Equipment		
27193-21	Surface Mount Box - Red, 2-gang	2 (1.2)
27193-26	Surface Mount Box - White, 2-gang	2 (1.2)
SIGA-UIO2R	Universal Input-Output Module Board w/Riser Inputs - Two Module Positions	0.32 (0.15)
SIGA-UIO6R	Universal Input-Output Module Board w/Riser Inputs - Six Module Positions	0.62 (0.28)
SIGA-UIO6	Universal Input-Output Module Board - Six Module Positions	0.56 (0.25)
235196P	Bi-polar Transient Protector	0.01 (0.05)
MFC-A	Multifunction Fire Cabinet - Red, supports Signature Module Mounting Plates	7.0 (3.1)
SIGA-MP1	Signature Module Mounting Plate, 1 footprint	1.5 (0.70)
SIGA-MP2	Signature Module Mounting Plate, 1/2 footprint	0.5 (0.23)
SIGA-MP2L	Signature Module Mounting Plate, 1/2 extended footprint	1.02 (0.46)

CALIFORNIA DEPARTMENT OF FORESTRY & FIRE PROTECTION
OFFICE OF THE STATE FIRE MARSHAL
FIRE ENGINEERING & INVESTIGATIONS DIVISION
BUILDING MATERIALS LISTING PROGRAM

LISTING SERVICE

LISTING No.:	7300-1657:0121
CATEGORY:	7300 - FIRE ALARM CONTROL UNIT ACCESSORIES/MISC. DEVICES
LISTEE:	EDWARDS, A Division of UTC Fire & Security Americas Corporation, Inc. 8985 Town Center Parkway, Bradenton, FL, 34202 Contact: Rodgers, Teresa 941-739-4225 Email: teresa.rodgers@carrier.com
DESIGN:	Models SIGA-CC1, SIGA-CC2, SIGA-CT1, SIGA-CT1HT, SIGA-CT2, SIGA-CR, SIGA-CRR, SIGA-UM, SIGA-MM1, SIGA-WTM, SIGA-IM, *SIGA-IM2, SIGA-MDM, SIGA-MAB, SIGA-MCT2, SIGA-MCC1, SIGA-MCC2, SIGA-MCR, and SIGA-MCRR Remote Transponders. Models SIGA-AA30 and SIGA-AA50 audio amplifiers. Models SIGA-APS and SIGA-APS-220 power supplies. Models SIGA-MB4, SIGA-MP1, SIGA-MP2 and SIGA-MP2L mounting plates. Models SIGA-UIO2R, SIGA-UIO6 and SIGA-UIO6R motherboards. Model CS-SIGA-CC1P releasing module. Models SIGA-CC1S and SIGA-MCC1S Auto-Sync Output Modules. Models MFC-A and MFC-AD Enclosures. Model SIGA-CR2 Control Relay Module. Model SIGA-CT1HT Signature Series High Temperature Single Input Module. SIGA-CRH High Power Control Relay Module. Refer to listee's data sheet for additional detailed product description and operational consideration.
RATING:	15.2 - 19.95 VDC
INSTALLATION:	In accordance with listee's printed installation instructions, applicable codes and ordinances, and in a manner acceptable to the authority having jurisdiction.
MARKING:	Listee's name, model number, electrical rating, and UL label.
APPROVAL:	Listed as control unit accessories for use with separately listed compatible fire alarm control units. Refer to listee’s Installation Instruction Manual for details.
NOTES:	Formerly 7300-1591:121 and 7300-1388:178

*Revision 10-30-20 VWW

CALIFORNIA DEPARTMENT OF FORESTRY & FIRE PROTECTION
OFFICE OF THE STATE FIRE MARSHAL
FIRE ENGINEERING & INVESTIGATIONS DIVISION
BUILDING MATERIALS LISTING PROGRAM

LISTING SERVICE

This listing is based upon technical data submitted by the applicant. OSFM Fire Engineering staff has reviewed the test results and/or other data but does not make an independent verification of any claims. This listing is not an endorsement or recommendation of the item listed. This listing should not be used to verify correct operational requirements or installation criteria. Refer to listee's data sheet, installation instructions and/or other suitable information sources.

Date Issued: 05/22/2025

Listing Expires: 06/30/2026

Authorized By: **Michael Huang**, Program Coordinator
Fire Engineering & Investigations Division

EDWARDS

LIFE SAFETY & INCIDENT MANAGEMENT

Wall Mount Signaling Appliances

Genesis LED G4 Series

S218, S5389

Overview

Genesis LED G4 Series horns and LED strobes feature a sleek low profile design and energy-efficient technology that makes them less expensive to install and operate by reducing overhead. High performance LEDs require fewer power supplies, backup power, and batteries. These new appliances are designed with, energy-efficiency, and life safety in mind.

Genesis LED G4 Series uses high efficiency optics, combined with patented electronics, to deliver a highly controlled and efficiently focused light distribution pattern in exchange for lower current requirements. Strobes feature field-selectable 15, 30,75, or 110 cd light output.

Compared with Xenon-type strobes, Genesis LED G4 Series appliances need fewer power supplies and often smaller wire gauge, which lightens conduit requirements. They are also backwards compatible with legacy strobes, so there's no need to replace all your existing devices to upgrade to new LED technology. In fact, G4 strobes can be mixed on the same circuit and used in the same field of view as Xenon-based strobes. This makes Genesis LED G4 Series ideal for new installations and retrofits alike.

Field-configurable sound output levels provide the flexibility modern life safety projects demand, while the Genesis LED control protocol keeps multiple strobes on compatible NAC circuits synchronized to well within NFPA 72 requirements.

Serviceability is another area where G4 Series appliances shine. The universal room side wiring plate allows for pre-installation and electrical wiring as well as checking continuity with the included diagnostics check bar. G4 Series devices can then be easily snapped into place with the confidence of knowing the wiring is correct. The innovative under-cover diagnostic test points provide easy access to device circuit testing while mounted.

Standard Features

- **High Performance LED Strobe Technology**
  - Ultra low device current consumption allows:
    - More devices per circuit
    - Ability to use lower gauge wire
    - Longer wire runs
    - Fewer booster power supplies
  - High efficiency optics
  - Selectable 15, 30, 75, or 110 cd light output
  - LED devices may be mixed with legacy Xenon strobes
- **Efficient Audible Output**
  - Selectable high or low dB horn output
  - Selectable temporal or steady horn output
  - Improved audio frequency range for better wall penetration
- **Low-profile Design**
  - Ultra-slim... protrudes about 1.5" from the mounting surface
  - Attractive appearance... no visible mounting screws
- **Multiple "FIRE" Marking Options**
  - Order English, French, Spanish or no FIRE markings
  - Change markings at any time with replaceable quick-swap covers
- **Easy to Install**
  - Pre-install and pre-wire with convenient universal room side wiring plate
  - Check electrical continuity on room side wiring plate with included diagnostics check bar
  - Diagnostics port streamlines device circuit testing
  - Fits 1-gang, 2-gang, and 4-inch square electrical boxes
  - Optional red and white trim plates available
  - Slide switches for field configuration
  - 12 to 18 AWG in-out screw terminals for quick wiring

Application

Strobes

Genesis G4 Series strobes are UL 1971-listed for use indoors as wall-mounted public-mode notification appliances for the hearing impaired. Prevailing codes require strobes to be used where ambient noise conditions exceed 105 dBA (87 dBA in Canada), where occupants use hearing protection, and in areas of public accommodation as defined in the *Americans with Disabilities Act*.

Synchronization is important in order to avoid triggering seizures in people with photosensitive epilepsy. All Genesis strobes exceed UL synchronization requirements (within 10 milliseconds over a two-hour period) when used with a synchronization source. See the specifications table for a list of compatible sources.

Horns

Genesis horn output reaches as high as 92 dBA and features an improved audio frequency range compared with other Genesis horns. This results in excellent sound penetration through walls and a clear warning of danger. Horn only models may be configured for either coded or non-coded notification appliance circuits. They can also be set for high or low dBA output. This setting reduces horn output by about 6 dBA. Horn-only models may be ceiling-mounted or wall-mounted.

The suggested sound pressure level for each signaling zone used with alarm signals is at least 15 dBA above the average ambient sound level, or 5 dBA above the maximum sound level having a duration of at least 60 seconds, whichever is greater. These values are measured at five feet (1.5 m) above the floor. The average ambient sound level is A-weighted, fast response sound pressure measured over a 24-hour period.

Doubling the distance from the signal to the ear will theoretically result in a 6 dBA reduction of the received sound pressure level. The actual effect depends on the acoustic environment in the space. A 3 dBA difference represents a barely noticeable change in volume.

Installation

Genesis G4 horns and strobes mount to the required GP10 room side wiring plate. The GP10 mounting plate is ordered separately from the G4 device in packs of 10 for convenient pre-installing and pre-wiring. The device can be removed easily from the room side wiring plate by pushing up with a screwdriver. The cover can also be removed from the device easily with a screwdriver to access the light and sound output settings and a diagnostics test port for voltage testing.

Removing Cover

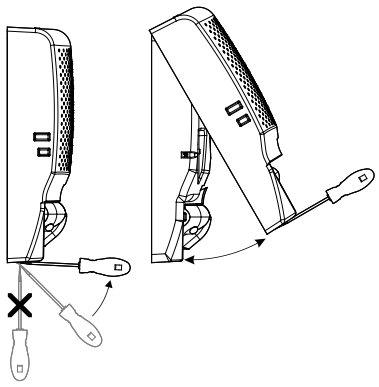

Removing Device

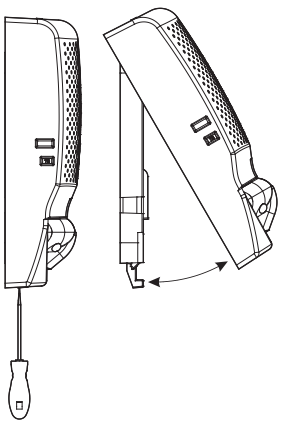

Genesis LED G4 Series horns, strobes, and horn-strobes mount to any standard one-gang, two-gang, 3.5-inch octagon, and 4-inch square electrical box. Matching optional G4T trim rings are available to cover oversized openings. Optional color matched double-gang surface boxes are also available.

Double Gang Electrical Box

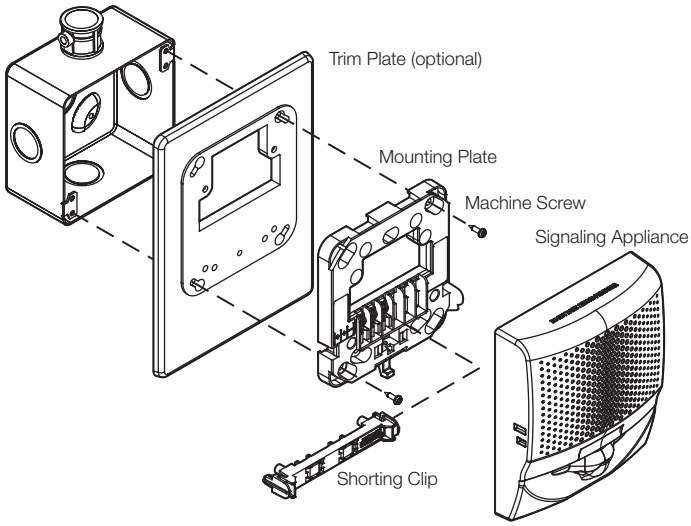

Optional Trim Plate

Using a trim plate is optional.

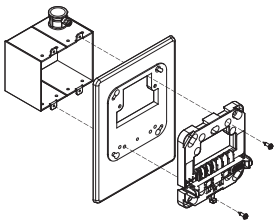

Two-gang Electrical Box

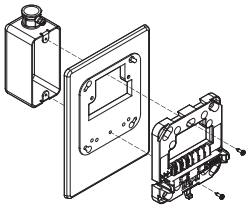

One-gang Electrical Box

Wiring

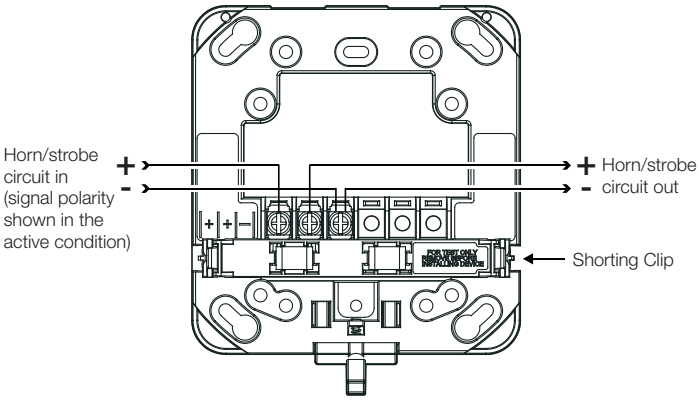

Dimensions

G4 Notification Appliances

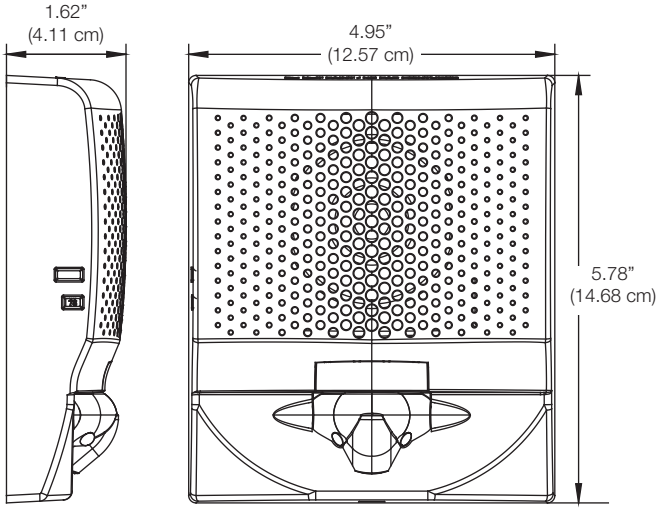

G4T Trim Plate (optional)

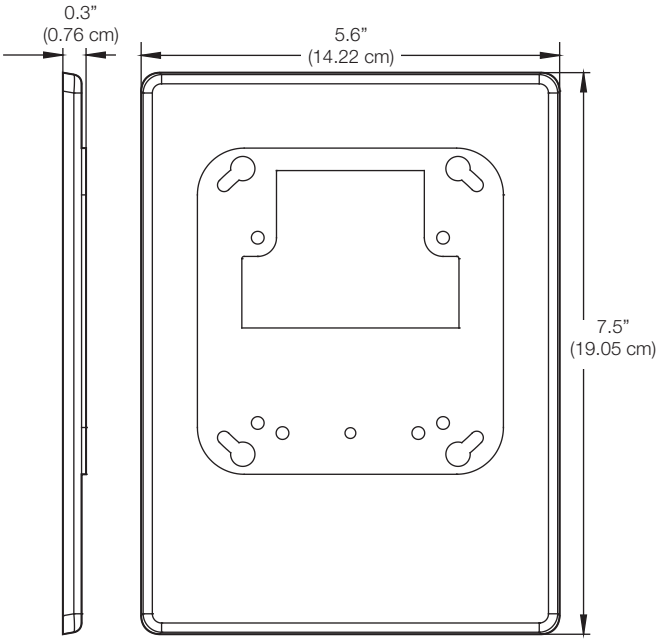

Diagnostics

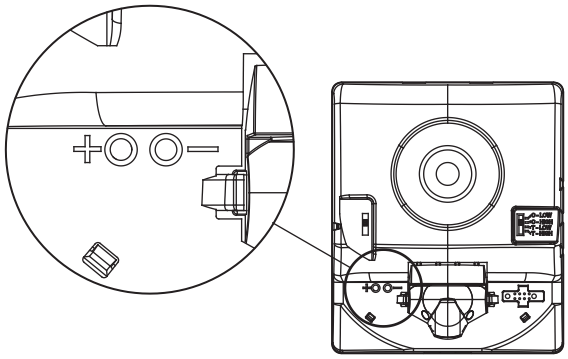

Test points indicated above are used to validate the Notification Appliance Circuit and verify device function.

Field Configuration

Temporal horn and horn-strobe models are factory set to sound in a three-pulse temporal pattern. By sliding the tone selector switch, horn only models may be configured for constant horn output that can be coded at precise intervals by EDWARDS control panels and control modules.

Note: Temporal 3 coding is the required output for fire notification devices per NFPA 72. Any device coding other than temporal 3 is at the discretion and approval of the local authority having jurisdiction (AHJ).

Horns and horn-strobes are factory set for high dB output. Low dB output may be selected by sliding the tone selector switch. This reduces the output by about 6 dBA.

Genesis LED clear strobes and horn-strobes may be set for 15, 30, 75, or 110 candela output. The output setting is changed by simply removing the cover and sliding the candela switch to the desired setting. The device does not have to be removed from the wall to change the output setting. The setting remains visible through a small window on the left-hand side of the device after the cover is closed.

Light and Sound Output Settings

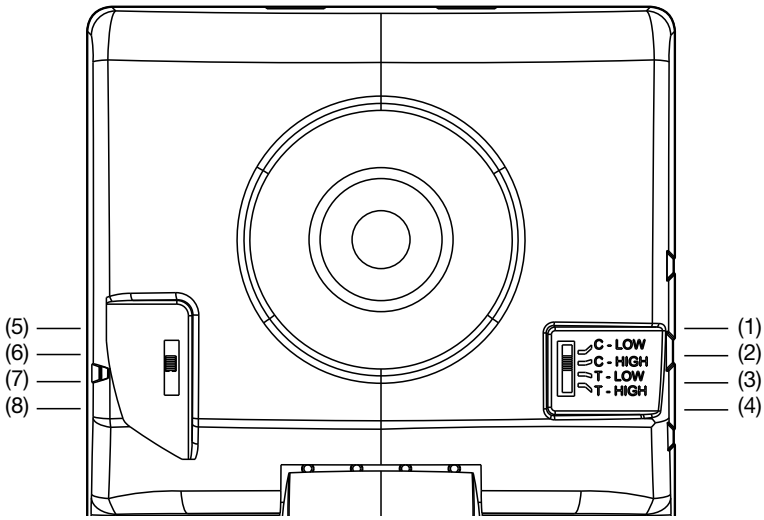

(1) Constant, low dB
(2) Constant, high dB
(3) T3 temporal, low dB
(4) T3 temporal, high dB
(5) 110 candela
(6) 75 candela
(7) 30 candela
(8) 15 candela

Operating current

Horns

Sound setting	16 to 33 VDC	16 to 33 VFWR
C-Low, T-Low	18 mA	22 mA
C-High, T-High	28 mA	38 mA

Strobes

Strobe setting	16 to 33 VDC	16 to 33 VFWR
15, 30, 75, 110	28 mA	36 mA

Horn-Strobes

Strobe setting	Sound setting	16 to 33 VDC	16 to 33 VFWR
15, 30, 75, 110	C-Low, T-Low	40 mA	48 mA
	C-High, T-High	50 mA	65 mA

Sound Output

Horn & Horn-Strobe

Sound setting	Reverberant (UL464)	Anechoic (CAN/ULC - S525)
C-Low, T-Low	80 dBA	86 dBA
C-High, T-High	85 dBA	92 dBA

Sound pattern (ULC)

Axis	Angle	Change in output
Horizontal	135° and 45°	–3 dBA
	150° and 30°	–6 dBA
Vertical	135° and 40°	–3 dBA
	150° and 30°	–6 dBA

Light Distribution

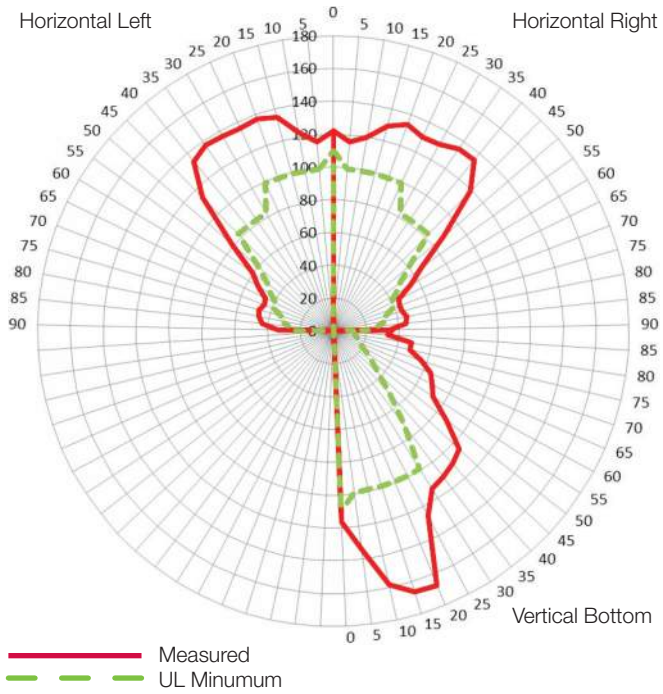

Specifications

Operating voltage	16 to 33 VDC, 16 to 33 VFWR
Horn signal type	Constant or TC3 temporal
Light output	15, 30, 75, or 110 candela
Strobe flash rate	1 fps (flash per second) approx.
Synchronization	20 Ω max. between any two devices. To determine allowed wire resistance, refer to these specifications, and the specifications for the synchronized signal source.
Synchronization Sources	Edwards CC Series Signal Modules, Booster and Auxiliary Power Supplies, Intelligent and Conventional Control Panels
Wire size	12 to 18 AWG (0.75 to 2.50 mm^2)
Dimensions (W×H×D)	4.95 x 5.78 x 1.62 in (12.57 x 14.68 x 4.11 cm)
Strobe-to-box center offset	-1.70 inches (-4.32 cm)
Compatible electrical boxes [1]	1-gang, 2-gang, 4-inch square
Trim plates	G4TR, G4TW (5.6 x 7.5 x 0.3 in (14.22 x 19.05 x 0.76 cm))
Operating environment	
Temperature	32 to 122°F (0 to 50°C)
Relative humidity	0 to 93% noncondensing
Storage Temperature	-40 to 158 F (-40 to 70 C)

[1] Electrical boxes must be at least 1-1/2 in. (3.81 cm) deep.

Ordering Information

FOR REFERENCE ONLY

Notification Appliances		Color	Marking
Horns	G4ARF	Red	FIRE
	G4ARF-FR	Red	FEU/FIRE
	G4ARF-SP	Red	FUEGO
	G4ARN	Red	None
	G4AWF	White	FIRE
	G4AWF-FR	White	FEU/FIRE
	G4AWF-SP	White	FUEGO
	G4AWN	White	None
Strobes	G4VRF	Red	FIRE
	G4VRF-FR	Red	FEU/FIRE
	G4VRF-SP	Red	FUEGO
	G4VRN	Red	None
	G4VWF	White	FIRE
	G4VWF-FR	White	FEU/FIRE
	G4VWF-SP	White	FUEGO
	G4VWN	White	None
Horn-strobes	G4AVRF	Red	FIRE
	G4AVRF-FR	Red	FEU/FIRE
	G4AVRF-SP	Red	FUEGO
	G4AVRN	Red	None
	G4AVWF	White	FIRE
	G4AVWF-FR	White	FEU/FIRE
	G4AVWF-SP	White	FUEGO
	G4AVWN	White	None

Replacement Appliance Covers		Color	Marking
Horn Covers	G4ARA-CVR	Red	ALERT
	G4ARF-CVR	Red	FIRE
	G4ARF-FR-CVR	Red	FEU/FIRE
	G4ARF-SP-CVR	Red	FUEGO
	G4ARN-CVR	Red	None
	G4AWA-CVR	White	ALERT
	G4AWF-CVR	White	FIRE
	G4AWF-FR-CVR	White	FEU/FIRE
	G4AWF-SP-CVR	White	FUEGO
	G4AWN-CVR	White	None
Strobe Covers	G4VRA-CVR	Red	ALERT
	G4VRF-CVR	Red	FIRE
	G4VRF-FR-CVR	Red	FEU/FIRE
	G4VRF-SP-CVR	Red	FUEGO
	G4VRN-CVR	Red	None
	G4VWA-CVR	White	ALERT
	G4VWF-CVR	White	FIRE
	G4VWF-FR-CVR	White	FEU/FIRE
	G4VWF-SP-CVR	White	FUEGO
	G4VWN-CVR	White	None
Horn-strobe Covers	G4AVRA-CVR	Red	ALERT
	G4AVRF-CVR	Red	FIRE
	G4AVRF-FR-CVR	Red	FEU/FIRE
	G4AVRF-SP-CVR	Red	FUEGO
	G4AVRN-CVR	Red	None
	G4AVWA-CVR	White	ALERT
	G4AVWF-CVR	White	FIRE
	G4AVWF-FR-CVR	White	FEU/FIRE
	G4AVWF-SP-CVR	White	FUEGO
	G4AVWN-CVR	White	None

Accessories

	GP10	Room Side Wiring Plate (required, ordered separately)		G4TR	Trim plate, G4 Series, red		G4TW	Trim plate, G4 Series, white
				27193-21	Two-gang surface mount box, red		27193-26	Two-gang surface mount box, white

Model Number Syntax, Appliances

Genesis Series
G4 = Wall mount appliances

Housing Color
R = Red
W = White

G4AVRF

Housing Marking
N = None
F-FR = FEU/FIRE
F-SP = FUEGO
F = FIRE
A = ALERT*

Functions
A = Horn only
V = Strobe only
AV = Horn-Strobe

* ALERT Marking available on white strobe model only. See replacement covers for more options.

Model Number Syntax, Replacement Covers

Genesis Series
G4 = Wall mount appliances

Housing Color
R = Red
W = White

G4AVRF-CVR

Cover Designation

Cover Marking
N = None
F-FR = FEU/FIRE
F-SP = FUEGO
F = FIRE
A = ALERT

Functions
A = Horn only
V = Strobe only
AV = Horn-Strobe

LIFE SAFETY & INCIDENT MANAGEMENT

Contact us

Phone: 800-655-4497 (Option 4)
Email: edwards.fire@carrier.com
Website: edwardsfiresafety.com

8985 Town Center Pkwy
Bradenton, FL 34202

© 2023 Carrier
All rights reserved.

CALIFORNIA DEPARTMENT OF FORESTRY & FIRE PROTECTION
OFFICE OF THE STATE FIRE MARSHAL
FIRE ENGINEERING & INVESTIGATIONS DIVISION
BUILDING MATERIALS LISTING PROGRAM

LISTING SERVICE

LISTING No.:	7125-1657:0518
CATEGORY:	7125 - FIRE ALARM DEVICES FOR THE HEARING IMPAIRED
LISTEE:	EDWARDS, A Division of UTC Fire & Security Americas Corporation, Inc. 8985 Town Center Parkway, Bradenton, FL, 34202 Contact: Rodgers, Teresa 941-739-4225 Email: teresa.rodgers@carrier.com
DESIGN:	Models G4SEWA-A, G4SEWN-A, G4SEWA-R, G4SEWN-R, G4SEWA-G, G4SEWN-G, G4SEWA-B, G4SEWN-B, and G4SERA-A Genesis LED Strobe Expander. The Genesis G4SE series strobe expanders add a second synchronizable strobe to compatible Listed G4 series appliances. Intended for wall-mounting and indoor dry use only. Refer to listee's printed data sheet for detailed product description and operational considerations.
RATING:	Electrical Ratings: Regulated 24 Vdc/Vfwr (16-33 Vdc/Vfwr) Light Output Ratings: Amber Lens: 75 cd Green Lens: 65 cd Blue Lens: 30 cd Red Lens: 15 cd
INSTALLATION:	In accordance with listee's printed installation instructions, applicable codes and ordinances, and in a manner acceptable to the authority having jurisdiction.
MARKING:	Listee's name, model number, ratings (electrical and candela), and UL label.
APPROVAL:	Listed as wall-mounted strobe expanders for use with listee's separately listed compatible fire alarm control panel. Refer to listee's Installation Instruction Manual for details.
NOTES:	

10-15-20 VWW

CALIFORNIA DEPARTMENT OF FORESTRY & FIRE PROTECTION
OFFICE OF THE STATE FIRE MARSHAL
FIRE ENGINEERING & INVESTIGATIONS DIVISION
BUILDING MATERIALS LISTING PROGRAM

LISTING SERVICE

This listing is based upon technical data submitted by the applicant. OSFM Fire Engineering staff has reviewed the test results and/or other data but does not make an independent verification of any claims. This listing is not an endorsement or recommendation of the item listed. This listing should not be used to verify correct operational requirements or installation criteria. Refer to listee's data sheet, installation instructions and/or other suitable information sources.

Date Issued: 05/23/2025

Listing Expires: 06/30/2026

Authorized By: **Michael Huang**, Program Coordinator
Fire Engineering & Investigations Division

EDWARDS

LIFE SAFETY & INCIDENT MANAGEMENT

Outdoor-Rated Horns, Strobes, and Horn-Strobes

Genesis LED WG Series

S218, S5389

7135-1657:0522
7125-1657:0521

Overview

Genesis LED WG Series horn, strobe and horn-strobe appliances are among the most versatile emergency appliances of their kind. They are exceptionally capable as they are designed for outdoor wet applications with a NEMA 4X / IP66 UL listing[1], and IP67 Compliant[2]. Genesis LED WG appliances operate seamlessly in extreme temperatures, with a listed operating temperature range of as low as -40 °F to as high as 151 °F (-40 °C to 66 °C). These features make them suitable for a wide range of wet and harsh environments and applications, such as exposure to rain, snow, and sleet, and challenging conditions such as process areas.

Genesis LED WG Series feature a sleek low-profile design and offer energy-efficient technology that makes them less expensive to install and operate by reducing overhead. Genesis LED WG Series strobes feature high-efficiency optics, combined with patented electronics, to deliver a highly controlled and efficiently focused light distribution pattern in exchange for lower current requirements. Strobes have field-selectable 15 or 30 cd light output. They are precision-timed to meet UL 1971 synchronization standards. Candela settings are viewable even after installation through an innovative sealed viewport display.

Compared with Xenon-type strobes, High-Performance LED strobes require fewer power supplies, backup power, batteries, and often smaller wire gauge, which lightens conduit requirements. They are also backwards-compatible with legacy strobes, so there's no need to replace all your existing devices to upgrade to new LED technology. In fact, Genesis LED WG Series strobes can be mixed on the same circuit and used in the same field of view as Xenon-based strobes. This makes Genesis LED WG Series ideal for new installations and retrofits alike.

Genesis LED WG Series appliances feature an efficient and powerful piezo sounder. Field-configurable sound output levels provide the flexibility modern life safety projects demand, while the Genesis LED control protocol keeps multiple strobes on compatible NAC circuits synchronized to well within NFPA 72 requirements.

They are available for mounting on the ceiling or the wall. They can be installed to recessed (in-the-pour/block) electrical boxes. Genesis LED WG notification appliances also mount to suitable surface boxes. Replaceable Cover skins are available with FIRE, ALERT, FEU/FIRE (French/English), FUEGO (Spanish), and no marking configurations.

[1]UL Listed for Type 4X and IP66 when installed in surface/flush-mount applications as described under "Specifications."
[2]Device only (standalone) is IP67 compliant.

Standard Features

- **Designed for Outdoor & Wet-Rated Applications**
  - NEMA 4X / IP66[1] UL listing (when installed in surface/flush-mount applications)
  - IP67[2] Compliant Device only (standalone)
- **High-Performance LED Strobe Technology**
  Ultra-low device current consumption allows:
  – More devices per circuit
  – Ability to use lower-gauge wire
  – Longer wire runs
  – Fewer booster power supplies
  – High-efficiency optics
  – Selectable 15 or 30 cd light output
  – LED devices may be mixed with legacy Xenon strobes
- **Efficient Audible Output**
  – Selectable high or low dB horn output
  – Selectable temporal or steady horn output
  – Improved audio frequency range for better wall penetration
- **Low-Profile Design**
  – Ultra-slim... protrudes about 1.55 in. (3.94 cm) from the mounting surface
  – Attractive appearance... no visible mounting screws
- **Multiple Marking Options**
  – Order FIRE, ALERT, FEU/FIRE (French/English), FUEGO (Spanish), or no marking configurations.
  – Change markings at any time with replaceable quick-swap covers
- **Easy to Install**
  – Suitable for mount on walls or ceilings (indoor or outdoor)
  – Compatible with Model 449 (gray) or 74347U (red) deep 4-inch-square electrical box
  – Field-selectable settings
  – Fully compatible with Genesis synchronization protocols
  – Horn only, strobe only, and horn-strobe options
- **Current draw is the same for all candela output settings**
  – Easier for new system design
  – Flexible for future changes in light output needs

Application

Horns

Genesis LED WG Series horn output reaches as high as 86 dBA in accordance with UL 464 (88 dBA in accordance with ULC-S525) and features a unique frequency tone that results in excellent sound penetration and an unmistakable warning of danger. Horns may be configured for either coded or non-coded notification circuits.

The suggested sound pressure level for each notification zone used with alarm notification appliances is at least 15 dB above the average ambient sound level, or 5 dB above the maximum sound level having a duration of at least 60 seconds, whichever is greater, measured 5 feet (1.5 m) above the floor. The average ambient sound level is A-weighted (fast response) sound pressure measured over a 24-hour period.

Doubling the distance from the notification appliance to the ear will theoretically result in a 6 dB reduction of the received sound pressure level. The actual effect depends on the acoustic properties of materials in the space. A 3 dBA difference represents a barely noticeable change in volume.

Strobes

Genesis LED WG Series clear-lensed strobes are UL 1971-listed for use indoors as wall- or ceiling-mounted public-mode notification appliances for the hearing impaired, and UL 1638-listed for outdoor applications. Prevailing codes require strobes to be used where ambient noise conditions exceed specified levels, where occupants use hearing protection, and in areas of public accommodation as defined in the Americans with Disabilities Act.

Visible appliance synchronization is required to avoid causing issues with people who have Photosensitive Epilepsy (PSE). Notification appliance synchronization is also generally required when more than two strobe appliances are in the same field of view from any one location. All Genesis strobes meet UL synchronization requirements (within 10 milliseconds over a two-hour period) when used with a synchronization source. See the specifications table for a list of compatible sources.

Installation and Mounting

Genesis LED WG Series notification appliances are rated for outdoor use and are suitable for indoor or outdoor applications on walls or ceilings. When installing the notification appliance in flush-mount outdoor or wet applications on a standard 4-inch-square-deep electrical box, WGWMA (white) or WGRMA (red) adapter plate must be ordered separately; remove the trim skirt from the adapter ring by removing the two screws from the back of the adapter ring.

For surface-mount installation in outdoor or wet applications, appliances must be mounted to a 449 (gray) or 74347U (red) weatherproof electrical box, and a WGWMA (white) or WGRMA (red) adapter plate with ring is required and must be ordered separately.

The shallow depth of Genesis LED devices leaves room behind the appliance for extra wiring.

See “Specifications” below for a list of compatible electrical boxes that meet UL/ULC, IP66, and NEMA 4X requirements.

To meet IP66 requirements, plumbing tape (Teflon tape) must be applied to all threaded conduit plugs and connectors.

The Genesis LED WG series notification appliances listed in the data sheet are for DC rated operating voltage applications only. See Application Bulletin for details on application requirements requiring FWR operating voltage.

Flush-mount installation – 4-inch-square-deep electrical box

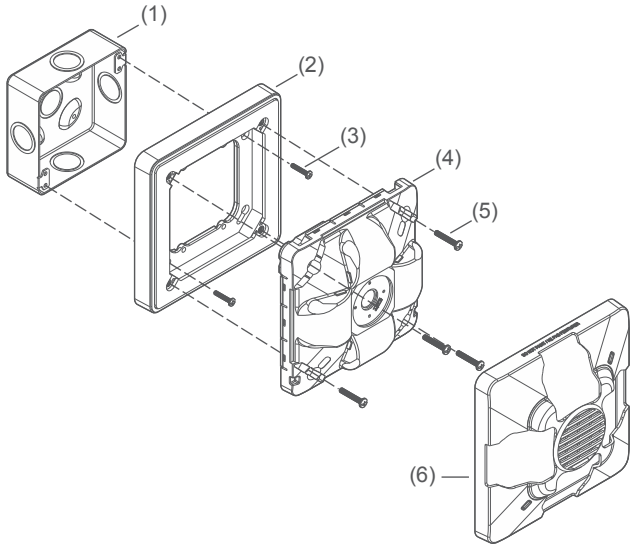

(1) 4-inch-square-deep electrical box
(2) WGWMA or WGRMA adapter plate (required, ordered separately)
(3) 8-32 machine screw (2X, supplied with electrical box)
(4) Notification appliance
(5) 8-32 machine screws (4X, supplied with appliance)
(6) Cover

Surface-mount Installation – Model 449 (gray) or 74347U (red) weatherproof electrical box

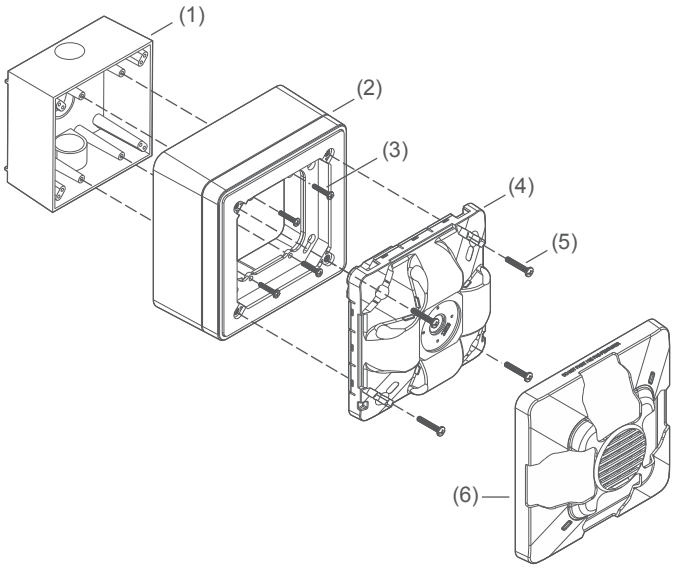

(1) Model 449 or 74347U weatherproof surface-mount electrical box
(2) WGWMA or WGRMA adapter plate with ring (required, ordered separately)
(3) 6-32 machine screw (4X, supplied with appliance)
(4) Notification appliance
(5) 8-32 machine screws (4X, supplied with appliance)
(6) Cover

WARNING: These devices will not operate without electrical power. As fires frequently cause power interruptions, we suggest you discuss further safeguards with your local fire protection specialist.

EDWARDS recommends that these devices always be installed in accordance with the latest recognized edition of national and local codes. Refer to the appropriate codes and standards for mounting height information.

Field Configuration

Horn pattern

Audible output of Genesis LED WG horns and horn-strobes is factory-set to sound in a three-pulse temporal pattern. Units may be configured for use with coded systems by cutting a JP1 on the circuit board, setting the switch to continuous mode. This results in a steady output that can be turned on and off (coded) as the system applies and removes power to the notification circuit. Note: Temporal 3 coding is the required output for fire notification devices per NFPA 72. Any device coding other than temporal 3 is at the discretion and approval of the local authority having jurisdiction (AHJ).

Strobe pattern

Genesis LED WG horn-strobes are factory-set for use as UL 1971-compliant notification appliances for public mode operation, and UL 1638-listed as protective visual signaling appliances.

Strobe output

Genesis LED WG horn-strobes may be set for one of four output intensities.The output setting is changed by simply opening the device and sliding the switch to the desired setting. The device does not have to be removed to change the output setting. The setting remains visible after the cover is closed through a small window on the front of the device.

Light and Sound Output Settings

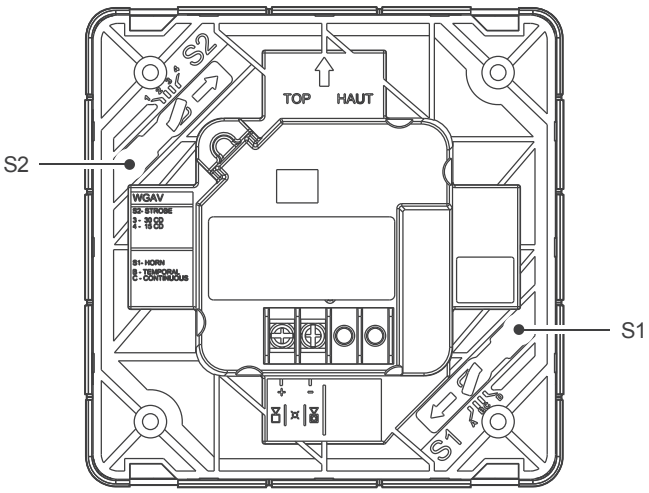

S1 switch settings		S2 switch settings	
A	Not used	1	Not used
B	Temporal	2	Not used
C	Continuous	3	30 candela
D	Not used	4	15 candela

Note: Temporal 3 coding is the required output for fire notification devices per NFPA 72. Any device coding other than temporal 3 is at the discretion and approval of the local authority having jurisdiction (AHJ).

Wiring

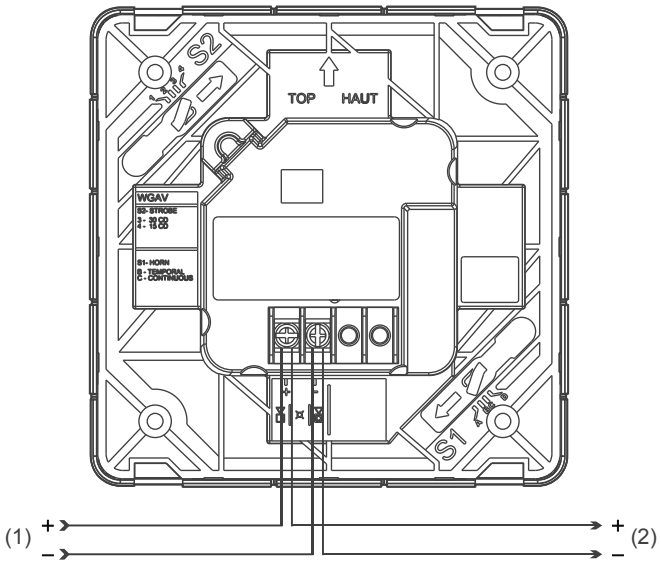

(1) Horn/strobe circuit in (signal polarity shown in the active condition)
(2) Horn/strobe circuit out

Dimensions

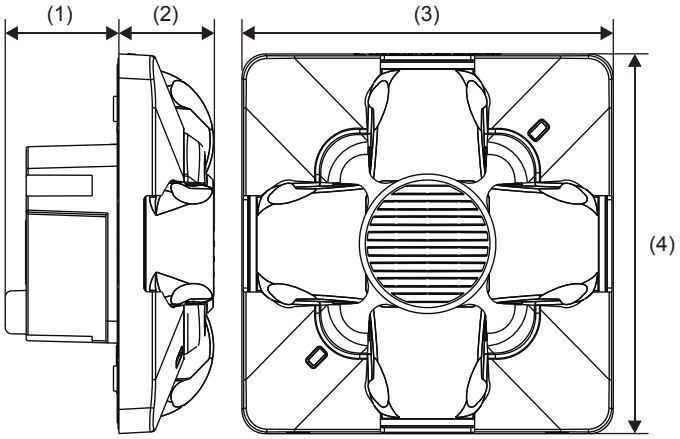

(1) 1.8 in. (4.57 cm)
(2) 1.55 in. (3.94 cm)
(3) 6.0 in. (15.24 cm)
(4) 6.0 in. (15.24 cm)

Sound Output

Horn & Horn-Strobe

Sound setting	Reverberant (UL 464)	Anechoic (CAN/ULC-S525)
Continuous/Temporal	86 dBA	88 dBA

Sound Pattern

Horn Models

Axis	Angle	Change in output
Horizontal	± 46°	–3 dBA
	± 78°	–6 dBA
	± 90°	–8.5 dBA
Vertical	± 46°	–3 dBA
	± 78°	–6 dBA
	± 90°	–8.3 dBA

Horn-Strobe Models

Axis	Angle	Change in output
Horizontal	± 58°	–3 dBA
	± 84°	–6 dBA
	± 90°	–7.1 dBA
Vertical	± 48°	–3 dBA
	± 79°	–6 dBA
	± 90°	–8.1 dBA

Light Distribution

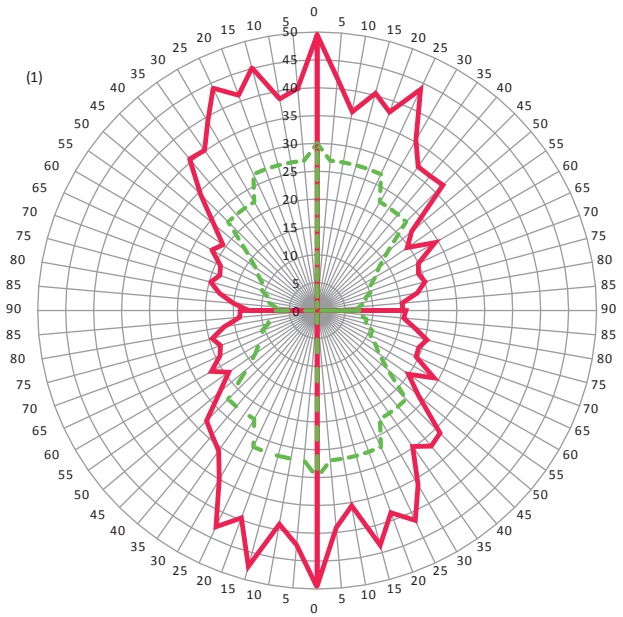

(1) Horizontal left

Measured
UL minimum

Operating Current

Horn Models

Sound setting	16 to 33 VDC
Continuous/Temporal	20 mA

Strobe Models

Strobe setting	16 to 33 VDC
15,30	35 mA

Horn-Strobe Models

Strobe setting	Sound setting	16 to 33 VDC
15,30	Continuous/Temporal	50 mA

Specifications

Operating voltage	16 to 33 VDC
Horn signal type	Continuous or T3 temporal
Light output	15, 30 cd
Strobe flash rate	1 fps (flash per second) approx.
Synchronization	20 Ω max. between any two devices. To determine allowed wire resistance, refer to these specifications, and the specifications for the synchronized signal source.
Synchronization Sources	Edwards CC/MCC Series Signal Modules[3], Universal Class A/B modules[3], FX-NAC[3], Booster and Auxiliary Power Supplies, Intelligent Control Panels
Wire size	12 to 18 AWG (0.75 to 2.50 mm²)
Screw torque	
Mounting screws	15 lbf-in (1.8 N-m) max.
Terminal screws	12 lbf-in (1.4 N-m) max.
Compatible electrical boxes[4]	
Surface mount[5]	
UL/ULC, IP66, NEMA 4X	Model 449 (gray) or 74347U (red) electrical box with WGWMA or WGRMA adapter plate with ring
Flush mount[5]	
UL/ULC, IP66, NEMA 4X	Deep 4-inch-square electrical box with WGWMA or WGRMA adapter plate
Compatible adapter rings	WGWMA, WGRMA
Operating environment	
Class	Outdoor wet
Temperature	–40 to 150.8°F (–40 to 66°C)
Relative humidity	0 to 95% noncondensing
Storage temperature	-40 to 158°F (-40 to 70°C)
RAL Color	Red=RAL 3013 White=RAL 9002
Environmental Compliance	RoHS directive 2011/65/EU

[3]Compatibility for these modules limited to 3 appliances.
[4]Electrical boxes must be at least 2 in. (5.08 cm) deep.
[5]To meet IP66 requirements, plumbing tape (Teflon tape) must be applied to all threaded conduit plugs and connectors.

Ordering Information

Notification Appliances		Color	Marking
Horns	WGARA	Red	ALERT
	WGARF	Red	FIRE
	WGARN	Red	None
	WGAWA	White	ALERT
	WGAWF	White	FIRE
	WGAWN	White	None
	WGARF-FR	Red	FIRE FEU
	WGAWF-FR	White	FIRE FEU
	WGARF-SP	Red	FUEGO
	WGAWF-SP	White	FUEGO
Strobes	WGVRA	Red	ALERT
	WGVRF	Red	FIRE
	WGVRN	Red	None
	WGVWF	White	FIRE
	WGVWN	White	None
	WGVRF-FR	Red	FIRE FEU
	WGVWF-FR	White	FIRE FEU
	WGVRF-SP	Red	FUEGO
	WGVWF-SP	White	FUEGO
	WGVWA	White	ALERT
Horn-Strobes	WGAVRA	Red	ALERT
	WGAVRF	Red	Fire
	WGAVRN	Red	None
	WGAVWA	White	ALERT
	WGAVWF	White	FIRE
	WGAVWN	White	None
	WGAVRF-FR	Red	FIRE FEU
	WGAVWF-FR	White	FIRE FEU
	WGAVRF-SP	Red	FUEGO
	WGAVWF-SP	White	FUEGO

Replacement Appliance Covers		Color	Marking
Horn Covers	WGARA-CVR	Red	ALERT
	WGARF-CVR	Red	FIRE
	WGARF-FR-CVR	Red	FIRE FEU
	WGARF-SP-CVR	Red	FUEGO
	WGARN-CVR	Red	None
	WGAWA-CVR	White	ALERT
	WGAWF-CVR	White	FIRE
	WGAWF-FR-CVR	White	FIRE FEU
	WGAWF-SP-CVR	White	FUEGO
	WGAWN-CVR	White	None
Strobe Covers	WGVRA-CVR	Red	ALERT
	WGVRF-CVR	Red	FIRE
	WGVRF-FR-CVR	Red	FIRE FEU
	WGVRF-SP-CVR	Red	FUEGO
	WGVRN-CVR	Red	None
	WGVRA-CVR	White	ALERT
	WGVWA-CVR	White	ALERT
	WGVWF-CVR	White	FIRE
	WGVWF-FR-CVR	White	FIRE FEU
	WGVWN-CVR	White	None
Horn-Strobe Covers	WGAVRA-CVR	Red	ALERT
	WGAVRF-CVR	Red	FIRE
	WGAVRF-FR-CVR	Red	FIRE FEU
	WGAVRF-SP-CVR	Red	FUEGO
	WGAVRN-CVR	Red	None
	WGAVWA-CVR	White	ALERT
	WGAVWF-CVR	White	FIRE
	WGAVWF-FR-CVR	White	FIRE FEU
	WGAVWF-SP-CVR	White	FUEGO
	WGAVWN-CVR	White	None

Accessories					
	74347U	Surface-mount box, outdoor rated, Red		WGWMA	Adapter Plate, White
	449	Surface-mount box, outdoor rated, Gray		WGRMA	Adapter Plate, Red

Model Number Syntax, Appliances

Genesis Series
WG = Genesis Outdoor Rated

Housing Color
R = Red
W = White

WGAVRF

Housing Marking
N = None
F-FR = FEU/FIRE
F-SP = FUEGO
F = FIRE
A = ALERT

Functions

Model Number Syntax, Replacement Covers

Genesis Series
WG = Genesis Outdoor Rated

Housing Color
R = Red
W = White

WGAVRF-CVR

Cover Designation

Cover Marking
N = None
F-FR = FEU/FIRE
F-SP = FUEGO
F = FIRE
A = ALERT

Functions

LIFE SAFETY & INCIDENT MANAGEMENT

Contact us

Phone: 800-655-4497 (Option 4)
Email: edwards.fire@carrier.com
Website: edwardsfiresafety.com

For inquiries regarding Edwards Professional Services & Solutions, contact:
Edwards.PSS@carrier.com

8985 Town Center Pkwy
Bradenton, FL 34202

©2023 Carrier.
All rights reserved.

CALIFORNIA DEPARTMENT OF FORESTRY & FIRE PROTECTION
OFFICE OF THE STATE FIRE MARSHAL
FIRE ENGINEERING & INVESTIGATIONS DIVISION
BUILDING MATERIALS LISTING PROGRAM

LISTING SERVICE

LISTING No.:	7125-1657:0521
CATEGORY:	7125 - FIRE ALARM DEVICES FOR THE HEARING IMPAIRED
LISTEE:	EDWARDS, A Division of UTC Fire & Security Americas Corporation, Inc. 8985 Town Center Parkway, Bradenton, FL, 34202 Contact: Rodgers, Teresa 941-739-4225 Email: teresa.rodgers@carrier.com
DESIGN:	Edwards Models WGV, WGVRA, WGVRF, WGVRN, WGVWA, WGVWF, WGVWN, WGVRF-FR, WGVWF-FR, WGVRF-SP, WGVWF-SP, WGVxxxA, WGVxxxF, WGVxxxN, *WGVM, *WGVMRA, *WGVMRF, *WGVMRN, *WGVMWA, *WGVMWF, *WGVMWN, *WGVMRF-FR, *WGVMWF-FR, *WGVMRF-SP, *WGVMWF-SP, *WGVMxxxA, *WGVMxxxF, and *WGVMxxxN Genesis Outdoor Wall/Ceiling Strobes. Kidde Models EWGV, EWGVWF, EWGVRF, EWGVWN, EWGVRN, EWGVWA, EWGVRA, EWGVxxxA, EWGVxxxF, EWGVxxxN, *EWGVM, *EWGVMWF, *EWGVMRF, *EWGVMWN, *EWGVMRN, *EWGVMWA, *EWGVMRA, *EWGVMxxxA, *EWGVMxxxF, *EWGVMxxxN Genesis Outdoor Wall/Ceiling Strobes. Models WGRMA, WGWMA, WGxxxMA, EWGRMA, EWGMA, and EWGxxxMA Adapter Plate. Models 449 (gray) and 74347U (red) Surface Backboxes. The Genesis WGV/EWGV series strobes are wall/ceiling mount fire alarm notification appliances designed for outdoor wet applications. The models have a Type 4X and IP66 enclosure rating. The xxx = a custom color code designator consisting of a 3 numeric digit code. *The WGVM series and EWGVM series strobes are similar to WGV series and EWGV series strobes with additional 75cd and 115cd settings. Refer to listee's data sheet for additional detailed product description and operational considerations.
RATING:	Regulated 24 VDC (16-33 VDC) Models WGV and EWGV series Candela: 15, or 30cd selectable *Models WGVM and EWGVM series Candela: 15, 30, 75, or 115cd selectable
INSTALLATION:	In accordance with listee's printed installation instructions, NFPA 72, applicable codes and ordinances, and in a manner acceptable to the authority having jurisdiction.
MARKING:	Listee's name, model number, ratings (electrical and candela), and UL label.

CALIFORNIA DEPARTMENT OF FORESTRY & FIRE PROTECTION
OFFICE OF THE STATE FIRE MARSHAL
FIRE ENGINEERING & INVESTIGATIONS DIVISION
BUILDING MATERIALS LISTING PROGRAM

LISTING SERVICE

APPROVAL:	Listed as strobes when used with separately listed compatible fire alarm control unit. Units are suitable for outdoor wet locations. Refer to listee's Installation Instruction Manual for details. Models complies with the applicable requirements in UL 1638, 5th Edition and UL 1971, 3rd Edition.
NOTES:	

04-09-25 MH

*Revised

This listing is based upon technical data submitted by the applicant. OSFM Fire Engineering staff has reviewed the test results and/or other data but does not make an independent verification of any claims. This listing is not an endorsement or recommendation of the item listed. This listing should not be used to verify correct operational requirements or installation criteria. Refer to listee's data sheet, installation instructions and/or other suitable information sources.

Date Issued: 05/21/2025

Listing Expires: 06/30/2026

Authorized By: **Michael Huang**, Program Coordinator
Fire Engineering & Investigations Division

EDWARDS
Built for Resilience

Fire Alarm Bells

FM APPROVED
MEA
S218, S2202
7136-1657: 0150

Overview

EDWARDS Fire Alarm Bells are specially designed for fire alarm applications. The gongs are made of selected alloy steel to give the loud, resonant tones necessary in fire alarm systems.

Two gong sizes are available to overcome different ambient noise level.

The Fire Alarm Bells are of the underdome type with heavy duty mechanisms. Each bell is supplied with a mounting plate that fits any standard single-gang opening (see Installation Data). For weather-proof application EDWARDS offers an optional surface weatherproof back box. Refer to the Specification chart for applicability and catalog number of the weatherproof back box for the respective bell.

Finish — Standard gong and housing furnished gray with red label. Optional red finish available. **Add Suffix "R" to Catalog Number.**

FM — 438 and 439 Series Bells shown below are FM approved.

Standard Features

- Vibrating and single stroke
- 6 inch (150mm), 8 inch (200mm), 10 inch (250mm) sizes
- Red or gray finish
- Rugged compact mechanism
- Heavy duty cast housing
- Low power drain
- Wide voltage selection
- Indoor or weatherproof

Contact us

Phone: 800-655-4497 (Option 4)
Email: edwards.fire@kgsolutions.com
Website: edwardsfiresafety.com

8985 Town Center Pkwy
Bradenton, FL 34202

©2025 Walter Kidde Portable Equipment, LLC.
All Rights Reserved.

Installation

Cat. Nos. 438D and 439D 6" and 10" Bells

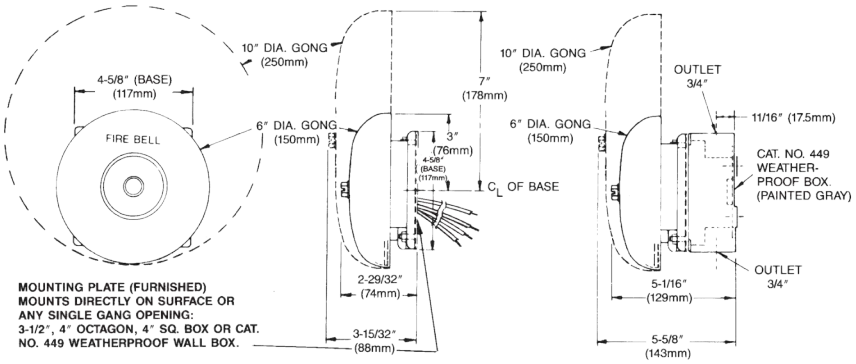

Cat. Nos. 323D and 10" (254mm) Bells

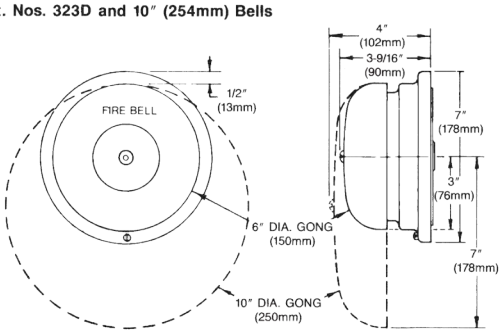

WARNING: These devices will not operate without electrical power. As fires frequently cause power interruptions, we suggest you discuss further safeguards with your local fire protection specialist.

EDWARDS recommends that these Fire Alarm Bells always be installed in accordance with the latest recognized editions of national and local codes.

Specifications & Ordering Information

Cat. No.	DB @ 10 ft	Description	Volts	Amps	Weatherproof Box
323D-10AW-R	79	10" (250mm) Single Stroke, Diode	20-24 Vdc	0.33	N/A
438D-6N5-R	76	6" (150mm) Vibrating, Diode	120 Vac	0.034	449
438D-10N5-R	88	10" (250mm) Vibrating, Diode	120 Vac	0.034	449
439D-6AW-R	83	6" (150mm) Vibrating, Diode	20-24 Vdc	0.085	449
439D-10AW-R	86	10" (250mm) Vibrating, Diode	20-24 Vdc	0.085	449
438D-8N5-R	86	8" (200mm) Vibrating, Diode	120 Vac	0.034	449
439D-8AW-R	84	8" (200mm) Vibrating, Diode	20-24 Vdc	0.085	449
439D-6AWC	83	6" (150mm) Vibrating, Diode, Red, ULC listed	20-24 Vdc	0.085	449
439D-10AWC	86	10" (250mm) Vibrating, Diode, Red, ULC listed	20-24 Vdc	0.085	449

Mounting Accessories

449	Weatherpoof surface mount box, grey. C/w gasket.

CALIFORNIA DEPARTMENT OF FORESTRY & FIRE PROTECTION
OFFICE OF THE STATE FIRE MARSHAL
FIRE ENGINEERING & INVESTIGATIONS DIVISION
BUILDING MATERIALS LISTING PROGRAM

LISTING SERVICE

LISTING No.:	7136-1657:0150
CATEGORY:	7136 - AUDIBLE DEVICES FOR HAZARDOUS LOCATIONS
LISTEE:	EDWARDS, A Division of UTC Fire & Security Americas Corporation, Inc. 8985 Town Center Parkway, Bradenton, FL, 34202 Contact: Rodgers, Teresa 941-739-4225 Email: teresa.rodgers@carrier.com
DESIGN:	Models 325, 340, 340T, 343, 438, 439, 439D series vibrating bells; and Models CS2315, CS2316 and 340DEX, 435DEX, 438DEX, 439DEX series explosion-proof bells. Models 325, 340, 340T, 343, 438, 439, 439D may be used outdoors when used with a weatherproof box. Refer to listee's data sheet for detailed model description and operational considerations.
RATING:	
INSTALLATION:	In accordance with listee's printed installation instructions, applicable codes and ordinances and in a manner acceptable to the authority having jurisdiction.
MARKING:	Listee’s name, model number, electrical rating, hazardous location classification (if applicable) and UL label.
APPROVAL:	Listed as audible devices for use with separately listed compatible control units. Explosion-proof models intended for use in Class I, Groups B,C,D; Class II, Groups E,F,G hazardous locations. If this appliance is required to produce a distinctive three-pulse Temporal Pattern Fire Alarm Evacuation Signal (for total evacuation) in accordance with NFPA 72, 2002 Edition, the appliance must be used with a fire alarm control unit that can generate the temporal pattern signal. Refer to manufacturer’s Installation Manual for details.
NOTES:	Formerly 7136-1591:150, 7135:1591:150, 7135-1388:110, 7135-0073:032

7-29-10 ma

CALIFORNIA DEPARTMENT OF FORESTRY & FIRE PROTECTION
OFFICE OF THE STATE FIRE MARSHAL
FIRE ENGINEERING & INVESTIGATIONS DIVISION
BUILDING MATERIALS LISTING PROGRAM

LISTING SERVICE

This listing is based upon technical data submitted by the applicant. OSFM Fire Engineering staff has reviewed the test results and/or other data but does not make an independent verification of any claims. This listing is not an endorsement or recommendation of the item listed. This listing should not be used to verify correct operational requirements or installation criteria. Refer to listee's data sheet, installation instructions and/or other suitable information sources.

Date Issued: 05/22/2025

Listing Expires: 06/30/2026

Authorized By: **Michael Huang**, Program Coordinator
Fire Engineering & Investigations Division

APPENDIX D

INSTRUMENT LIST DISTRIBUTION

P&ID Dwg No	Process Area	Tagnumber	Old Tagnumber	Instr Description	Service	Slot Module Address	FailPos	Coil/Range	Coil/Range UM	Manufacturer	Model Number	Procure By	Install By	HI Type	IO_Media	IO Panel	IO Card	IO Channel	ISA Func Code	Loop Status	LoopStatusDate	Instrument Location	Wire Type	Notes
PI-103	HTW	FIT-CHW-1		BTU, Flow Transmitter	CH-3 CHW Supply Flow Transmitter			TBD	GPM	Fisein /Rosemount	FLUXUS F721/TE ultrasonic flow meter + TIF Assembly	Dyco	Dyco	AI	Hardwired		BTU_CHW		FIT	New	1/6/2026	Chiller Room 1322	18TSP	
PI-103	HTW	FIT-HTW-1		BTU, Flow Transmitter	HTW BTU Flow Transmitter			TBD	GPM	Fisein /Rosemount	FLUXUS F721/TE ultrasonic flow meter + TIF Assembly	Dyco	Dyco	AI	Hardwired		BTU_HTW		FIT	New	1/6/2026	Chiller Room 1322	18TSP	
PI-103	HTW	FQIT-CHW-1		BTU, Meter	CH-3 CHW BTU Meter			TBD	TON	Fisein	part of BTU meter	Dyco	Dyco	AI	ENET		BOP_ENET		FQIT	New	1/6/2026	Chiller Room 1322	RS-485	
PI-103	HTW	FQIT-HTW-1		BTU, Meter	HT-3 HTW BTU Meter			TBD	TON	Fisein	part of BTU meter	Dyco	Dyco	AI	ENET		BOP_ENET		FQIT	New	1/6/2026	Chiller Room 1322	RS-485	
PI-103	HTW	PV-PR-10	FCV-PR-10	Flow Circuit Setter	HWR-10 Primary Side Flow Circuit Setter			TBD		Bell & Gossett	CB-6F	Mech	Mech	N/A	N/A		N/A		FCV	New	1/6/2026	Generator Room 155		Suggest using "FV" for manual balance valves.
PI-103	HTW	PV-PR-9	FCV-PR-9	Flow Circuit Setter	HWR-9 Primary Side Flow Circuit Setter			TBD		Bell & Gossett	CB-6F	Mech	Mech	N/A	N/A		N/A		FCV	New	1/6/2026	Generator Room 155		Suggest using "FV" for manual balance valves.
PI-103	HTW	PI-HTW-1		Pressure Gauge	HTWP-14 Pressure Gauge					Ashcroft, Petro's Plugs	1279, 251	Mech	Mech	N/A	N/A		N/A		PI	New	1/6/2026			
PI-103	HTW	PI-HTW-2		Pressure Gauge	HTWP-15 Pressure Gauge					Ashcroft, Petro's Plugs	1279, 251	Mech	Mech	N/A	N/A		N/A		PI	New	1/6/2026			
PI-103	HTW	PI-HTW-3		Pressure Gauge	HTWP-16 Pressure Gauge					Ashcroft, Petro's Plugs	1279, 251	Mech	Mech	N/A	N/A		N/A		PI	Future	1/6/2026 TBD Future			
PI-103	HTW	PI-HTW-4		Pressure Gauge	HTWP-17 Pressure Gauge					Ashcroft, Petro's Plugs	1279, 251	Mech	Mech	N/A	N/A		N/A		PI	Future	2/5/2026 TBD Future			
PI-103	HTW	PI-PR-10-1		Pressure Gauge	B-3 Outlet Temperature Transmitter					Ashcroft, Petro's Plugs	1279, 251	Mech	Mech	N/A	N/A		N/A		PI	New	1/6/2026			
PI-103	HTW	PI-PR-9-1		Pressure Gauge	HWR-9 Primary Side Outlet Pressure Gauge					Ashcroft, Petro's Plugs	1279, 251	Mech	Mech	N/A	N/A		N/A		PI	New	1/6/2026			
PI-103	HTW	PSV-10		Pressure Safety Valve	HRU-10 Pressure Safety Valve					Kunkle	91	Mech	Mech	N/A	N/A		N/A		PSV	New	1/6/2026			
PI-103	HTW	PSV-9		Pressure Safety Valve	HRU-9 Pressure Safety Valve					Kunkle	91	Mech	Mech	N/A	N/A		N/A		PSV	New	1/6/2026			
PI-103	HTW	PSV-HTW-10-1		Pressure Safety Valve	HWR-10 Secondary Side Outlet Pressure Safety Valve					Kunkle	91	Mech	Mech	N/A	N/A		N/A		PSV	New	1/6/2026			
PI-103	HTW	PSV-HTW-9-1		Pressure Safety Valve	HWR-9 Secondary Side Outlet Pressure Safety Valve					Kunkle	91	Mech	Mech	N/A	N/A		N/A		PSV	New	1/6/2026			
PI-103	HTW	PSV-PR-10-1		Pressure Safety Valve	HWR-10 Primary Side Inlet Pressure Safety Valve					Kunkle	91	Mech	Mech	N/A	N/A		N/A		PSV	New	1/6/2026			
PI-103	HTW	PSV-PR-9-1		Pressure Safety Valve	HWR-9 Primary Side Inlet Pressure Safety Valve					Kunkle	91	Mech	Mech	N/A	N/A		N/A		PSV	New	1/6/2026			
PI-103	HTW	TI-HTW-10-1		Temperature Gauge	HWR-10 Secondary Side Inlet Temperature Gauge					Ashcroft, Petro's Plugs	81, 311	Mech	Mech	N/A	N/A		N/A		TI	New	1/6/2026			
PI-103	HTW	TI-HTW-10-2		Temperature Gauge	HRU-10 Inlet Temperature Gauge					Ashcroft, Petro's Plugs	81, 311	Mech	Mech	N/A	N/A		N/A		TI	New	1/6/2026			
PI-103	HTW	TI-HTW-10-3		Temperature Gauge	HRU-10 Outlet Temperature Gauge					Ashcroft, Petro's Plugs	81, 311	Mech	Mech	N/A	N/A		N/A		TI	New	1/6/2026			
PI-103	HTW	TI-HTW-3		Temperature Gauge	CH-3 Hot Water Bypass Temperature Gauge					Ashcroft, Petro's Plugs	81, 311	Mech	Mech	N/A	N/A		N/A		TI	New	2/5/2026			
PI-103	HTW	TI-HTW-4		Temperature Gauge	CH-3 Corrosion Test Strips Temperature Gauge					Ashcroft, Petro's Plugs	81, 311	Mech	Mech	N/A	N/A		N/A		TI	New	2/5/2026			
PI-103	HTW	TI-HTW-9-1		Temperature Gauge	HWR-9 Secondary Side Inlet Temperature Gauge					Ashcroft, Petro's Plugs	81, 311	Mech	Mech	N/A	N/A		N/A		TI	New	1/6/2026			
PI-103	HTW	TI-HTW-9-2		Temperature Gauge	HRU-9 Inlet Temperature Gauge					Ashcroft, Petro's Plugs	81, 311	Mech	Mech	N/A	N/A		N/A		TI	New	1/6/2026			
PI-103	HTW	TI-HTW-9-3		Temperature Gauge	HRU-9 Output Temperature Gauge					Ashcroft, Petro's Plugs	81, 311	Mech	Mech	N/A	N/A		N/A		TI	New	1/6/2026			
PI-103	HTW	TI-SW-10-1		Temperature Gauge	HWR-10 Primary Side Inlet Temperature Gauge					Ashcroft, Petro's Plugs	81, 311	Mech	Mech	N/A	N/A		N/A		TI	New	1/6/2026			
PI-103	HTW	TI-SW-10-2		Temperature Gauge	HWR-10 Primary Side Outlet Temperature Gauge					Ashcroft, Petro's Plugs	81, 311	Mech	Mech	N/A	N/A		N/A		TI	New	1/6/2026			
PI-103	HTW	TI-SW-9-1		Temperature Gauge	HWR-9 Primary Side Inlet Temperature Gauge					Ashcroft, Petro's Plugs	81, 311	Mech	Mech	N/A	N/A		N/A		TI	New	1/6/2026			
PI-103	HTW	TI-SW-9-2		Temperature Gauge	HWR-9 Primary Side Outlet Temperature Gauge					Ashcroft, Petro's Plugs	81, 311	Mech	Mech	N/A	N/A		N/A		TI	New	1/6/2026			
PI-103	HTW	TI-PWR-1		Temperature Gauge	PWW Inlet Temperature Gauge					Ashcroft, Petro's Plugs	81, 311	Mech	Mech	N/A	N/A		N/A		TI	New	2/5/2026			
PI-103	HTW	TI-PWR-2		Temperature Gauge	PWW Outlet Temperature Gauge					Ashcroft, Petro's Plugs	81, 311	Mech	Mech	N/A	N/A		N/A		TI	New	2/5/2026			
PI-103	HTW	TIT-CHW-1	TIT-CH-1	BTU, Temperature Transmitter	CH-3 CHW Supply BTU Inlet Temperature Transmitter			TBD	°F	Ashcroft, Petro's Plugs	1279, 251	Dyco	Dyco	AI	Hardwired		BTU_CHW		TIT	New	1/6/2026	Chiller Room 1322	18TSP	
PI-103	HTW	TIT-CHW-2	TIT-CH-2	BTU, Temperature Transmitter	CH-3 CHW Return BTU Outlet Temperature Transmitter			TBD	°F	Fisein	BTU meter package hardware	Dyco	Dyco	AI	Hardwired		BTU_CHW		TIT	New	1/6/2026	Chiller Room 1322	18TSP	
PI-103	HTW	TIT-HTW-1		BTU, Temperature Transmitter	HTW System Supply Temperature Transmitter			TBD	°F	Fisein	BTU meter package hardware	Dyco	Dyco	AI	Hardwired		BTU_HTW		TIT	New	2/12/2026	Chiller Room 1322	18TSP	
PI-103	HTW	TIT-HTW-2	TIT-HTW-6	BTU, Temperature Transmitter	HTW System Return Temperature Transmitter			TBD	°F	Fisein	BTU meter package hardware	Dyco	Dyco	AI	Hardwired		BTU_HTW		TIT	New	2/12/2026	Chiller Room 1322	18TSP	
PI-103	HTW	ZSO-HTW-15	ZSO-HTW-9-1	Limit Switch, Valve Open	HWR-9 Secondary Side Inlet Flow Control Valve Open Confirm					with actuator		Dyco	Dyco	DI	Hardwired	CHP CP	CHP_P1_D01		1Z ZSO	New	1/6/2026	Generator Room 155	18/3	
PI-103	HTW	ZSC-HTW-15-1	ZSH-HTW-9-1	Limit Switch, Valve Closed	HWR-9 Secondary Side Inlet Flow Control Valve Close Confirm					with actuator		Dyco	Dyco	DI	Hardwired	CHP CP	CHP_P1_D02		1Z ZSC	New	1/6/2026	Generator Room 155	18/3	
PI-103	HTW	ZSO-HTW-16	ZSO-HTW-10-1	Limit Switch, Valve Open	HWR-10 Secondary Side Inlet Flow Control Valve Open Confirm					with actuator		Dyco	Dyco	DI	Hardwired	CHP CP	CHP_P1_D03		1B ZSO	New	1/6/2026	Generator Room 155	18/3	
PI-103	HTW	ZSC-HTW-16-1	ZSH-HTW-10-1	Limit Switch, Valve Closed	HWR-10 Secondary Side Inlet Flow Control Valve Close Confirm					with actuator		Dyco	Dyco	DI	Hardwired	CHP CP	CHP_P1_D04		1B ZSC	New	1/6/2026	Generator Room 155	18/3	
PI-103	HTW	HS-HTWP-14	HTD	Switch	HTWP-14 Speed Command	HTWP-14	0-100	%	ABB	ACH580		Mech	Mech	AO	ENET		CHP_EN_ENOT		3XC	New	1/6/2026	Generator Room 155	CAT6	
PI-103	HTW	HS-HTWP-15	HTD	Switch	HTWP-15 Speed Command	HTWP-15	0-100	%	ABB	ACH580		Mech	Mech	AO	ENET		CHP_EN_ENOT		3XC	New	1/6/2026	Generator Room 155	CAT6	
PI-103	HTW	HS-HTWP-16	HTD	Switch	HTWP-16 Speed Command	HTWP-16	0-100	%	ABB	ACH580		Mech	Mech	AO	ENET		CHP_EN_ENOT		3XC	Future	2/5/2026 TBD Future	CAT6		
PI-103	HTW	HS-HTWP-17	HTD	Switch	HTWP-17 Speed Command	HTWP-17	0-100	%	ABB	ACH580		Mech	Mech	AO	ENET		CHP_EN_ENOT		3XC	Future	2/5/2026 TBD Future	CAT6		
PI-103	HTW	FXV-HTW-9-1	FCV-HTW-9-2	Valve, Butterfly	HWR-9 Secondary Side Inlet Flow Valve Command		FO	1 = Close	Bray	valve series 40 +series 80 actuator		Dyco	Mech	DO	Hardwired	CHP CP	CHP_P1_DO03		3.3V	New	1/6/2026	Generator Room 155	18/2	
PI-103	HTW	FXV-HTW-10-1	FCV-HTW-10-1	Valve, Butterfly	HWR-10 Secondary Side Inlet Flow Valve Command		FO	1 = Close	Bray	valve series 40 +series 80 actuator		Dyco	Mech	DO	Hardwired	CHP CP	CHP_P1_DO07		4.9V	New	1/6/2026	Generator Room 155	18/2	
PI-103	HTW	FIT-HTW-9-1		Flow Transmitter	HWR-9 Secondary Side Inlet Flow Transmitter			TBD	GPM	Onicon	FT-3500	Dyco	Mech	AI	Hardwired	CHP CP	CHP_P2_A02		2 FIT	New	1/6/2026	Generator Room 155	18TSP	
PI-103	HTW	FIT-HTW-10-1		Flow Transmitter	HWR-10 Secondary Side Inlet Flow Transmitter			TBD	GPM	Onicon	FT-3500	Dyco	Mech	AI	Hardwired	CHP CP	CHP_P2_A02		4 FIT	New	1/6/2026	Generator Room 155	18TSP	
PI-103	HTW	TIT-HTW-1		Temperature Transmitter	HTWP Outlet Temperature Transmitter			TBD	°F	Rosemount	RTD: 214C TW:114C TT:644	Dyco	Mech	AI	Hardwired	CHP CP	CHP_P2_A02		7 TIT	New	1/6/2026	Generator Room 155	18TSP	
PI-103	HTW	TIT-HTW-2		Temperature Transmitter	CH-3 Inlet Header Temperature Transmitter			TBD	°F	Rosemount	RTD: 214C TW:114C TT:644	Dyco	Mech	AI	Hardwired	CHP CP	CHP_P2_A02		8 TIT	New	2/12/2026	Generator Room 155	18TSP	
PI-103	HTW	TIT-HTW-9-2		Temperature Transmitter	HRU-9 Inlet Temperature Transmitter			TBD	°F	Rosemount	RTD: 214C TW:114C TT:644	Dyco	Mech	AI	Hardwired	CHP CP	CHP_P2_A02		9 TIT	New	1/6/2026	CHP Building Roof	18TSP	
PI-103	HTW	TIT-HTW-10-2		Temperature Transmitter	HRU-10 Inlet Temperature Transmitter			TBD	°F	Rosemount	RTD: 214C TW:114C TT:644	Dyco	Mech	AI	Hardwired	CHP CP	CHP_P2_A02		10 TIT	New	1/6/2026	CHP Building Roof	18TSP	
PI-103	HTW	TIT-HTW-9-3		Temperature Transmitter	HRU-9 Outlet Temperature Transmitter			TBD	°F	Rosemount	RTD: 214C TW:114C TT:644	Dyco	Mech	AI	Hardwired	CHP CP	CHP_P2_A02		13 TIT	New	1/6/2026	CHP Building Roof	18TSP	
PI-103	HTW	TIT-HTW-10-3		Temperature Transmitter	HRU-10 Outlet Temperature Transmitter			TBD	°F	Rosemount	RTD: 214C TW:114C TT:644	Dyco	Mech	AI	Hardwired	CHP CP	CHP_P2_A02		14 TIT	New	1/6/2026	CHP Building Roof	18TSP	
PI-103	HTW	TIT-SW-9-1		Temperature Transmitter	HWR-9 Primary Side Inlet Temperature Transmitter			TBD	°F	Rosemount	RTD: 214C TW:114C TT:644	Dyco	Mech	AI	Hardwired	CHP CP	CHP_P2_A03		1 TIT	New	1/6/2026	Generator Room 155	18TSP	
PI-103	HTW	TIT-SW-10-1		Temperature Transmitter	HWR-10 Primary Side Inlet Temperature Transmitter			TBD	°F	Rosemount	RTD: 214C TW:114C TT:644	Dyco	Mech	AI	Hardwired	CHP CP	CHP_P2_A03		2 TIT	New	1/6/2026	Generator Room 155	18TSP	
PI-103	HTW	TIT-SW-9-2		Temperature Transmitter	HWR-9 Primary Side Outlet Temperature Transmitter			TBD	°F	Rosemount	RTD: 214C TW:114C TT:644	Dyco	Mech	AI	Hardwired	CHP CP	CHP_P2_A03		5 TIT	New	1/6/2026	Generator Room 155	18TSP	
PI-103	HTW	TIT-SW-10-2		Temperature Transmitter	HWR-10 Primary Side Outlet Temperature Transmitter			TBD	°F	Rosemount	RTD: 214C TW:114C TT:644	Dyco	Mech	AI	Hardwired	CHP CP	CHP_P2_A03		6 TIT	New	1/6/2026	Generator Room 155	18TSP	
PI-103	HTW	TCV-9-1		Bypass Damper	HRU-9 Bypass Damper Position Command	HRU-9	0-100	%				Vendor	Vendor	AO	Hardwired	CHP CP	CHP_P2_AO04		8 TV	New	1/6/2026	CHP Building Roof	18TSP	
PI-103	HTW	TCV-10-1		Bypass Damper	HRU-10 Bypass Damper Position Command	HRU-10	0-100	%				Vendor	Vendor	AO	Hardwired	CHP CP	CHP_P2_AO04		1 TV	New	1/6/2026	CHP Building Roof	18TSP	
PI-103	HTW	TCV-9W-9-1		Temperature Valve, Three-Way	HWR-9 Primary Side Outlet /Bypass Valve Position Command		FO	0-100	%	Siemens	Flowrite VF 599	Dyco	Mech	AO	Hardwired	CHP CP	CHP_P2_AO06		4 TV	New	2/26/2026	Generator Room 155	18TSP	
PI-103	HTW	TCV-10-1-1		Temperature Valve, Three-Way	HWR-10 Primary Side Outlet /Bypass Valve Position Command		FO	0-100	%	Siemens	Flowrite VF 599	Dyco	Mech	AO	Hardwired	CHP CP	CHP_P2_AO06		5 TV	New	2/26/2026	Generator Room 155	18TSP	
PI-103	HTW	FV-PR-11	FCV-PR-11	Flow Circuit Setter	HWR-11 Primary Side Flow Circuit Setter					Bell & Gossett	CB-6F	Mech	Mech	N/A	N/A		N/A		FCV	Future	1/6/2026			Suggest using "FV" for manual balance valves.
PI-103	HTW	FV-PR-12	FCV-PR-12	Flow Circuit Setter	HWR-12 Primary Side Flow Circuit Setter					Bell & Gossett	CB-6F	Mech	Mech	N/A	N/A		N/A		FCV	Future	1/6/2026			Suggest using "FV" for manual balance valves.
PI-103	HTW	ZSO-HTW-15-1	ZSH-HTW-11-1	Limit Switch, Valve Open	HWR-11 Secondary Side Inlet Flow Control Valve Open Confirm					with actuator		Dyco	Dyco	DI	Hardwired	CHP CP	CHP_P1_D05		1E ZSO	New	1/6/2026	Generator Room 155	18/3	
PI-103	HTW	ZSC-HTW-15-2	ZSH-HTW-11-2	Limit Switch, Valve Closed	HWR-11 Secondary Side Inlet Flow Control Valve Close Confirm					with actuator		Dyco	Dyco	DI	Hardwired	CHP CP	CHP_P1_D06		1E ZSC	New	1/6/2026	Generator Room 155	18/3	
PI-103	HTW	ZSO-HTW-16-1	ZSH-HTW-12-1	Limit Switch, Valve Open	HWR-12 Secondary Side Inlet Flow Control Valve Open Confirm					with actuator		Dyco	Dyco	DI	Hardwired	CHP CP	CHP_P1_D07		1B ZSO	Future	1/6/2026 TBD Future		18/3	
PI-103	HTW	ZSC-HTW-16-2	ZSH-HTW-12-2	Limit Switch, Valve Closed	HWR-12 Secondary Side Inlet Flow Control Valve Close Confirm					with actuator		Dyco	Dyco	DI	Hardwired	CHP CP	CHP_P1_D08		1B ZSC	Future	1/6/2026 TBD Future		18/3	
PI-103	HTW	ZSC-HTW-12-1	ZSL-HTW-12-1	Limit Switch, Valve Closed	HWR-12 Secondary Side Inlet Flow Control Valve Close Confirm					with actuator		Dyco	Dyco	DI	Hardwired	CHP CP	CHP_P1_D09		1/1B/3B/3 ZSC	Future	1/6/2026 TBD Future		18/3	
PI-103	HTW	PI-PR-11-1		Pressure Gauge	HWR-11 Primary Side Outlet Pressure Gauge					Ashcroft, Petro's Plugs	1279, 251	Mech	Mech	N/A	N/A		N/A		PI	Future	1/6/2026			
PI-103	HTW	PI-PR-12-1		Pressure Gauge	HWR-12 Primary Side Outlet Pressure Gauge					Ashcroft, Petro's Plugs	1279, 251	Mech	Mech	N/A	N/A		N/A		PI	Future	1/6/2026			
PI-103	HTW	PSV-11		Pressure Safety Valve	HRU-11 Pressure Safety Valve					Kunkle	91	Mech	Mech	N/A	N/A		N/A		PSV	Future	1/6/2026			
PI-103	HTW	PSV-12		Pressure Safety Valve	HRU-12 Pressure Safety Valve					Kunkle	91	Mech	Mech	N/A	N/A		N/A		PSV	Future	1/6/2026			
PI-103	HTW	PSV-HTW-11-1		Pressure Safety Valve	HWR-11 Secondary Side Outlet Pressure Safety Valve					Kunkle	91	Mech	Mech	N/A	N/A		N/A		PSV	Future	1/6/2026			
PI-103	HTW	PSV-HTW-12-1		Pressure Safety Valve	HWR-12 Secondary Side Outlet Pressure Safety Valve					Kunkle	91	Mech	Mech	N/A	N/A		N/A		PSV	Future	1/6/2026			
PI-103	HTW	PSV-PR-11-1		Pressure Safety Valve	HWR-11 Primary Side Inlet Pressure Safety Valve					Kunkle	91	Mech	Mech	N/A	N/A		N/A		PSV	Future	1/6/2026			
PI-103	HTW	PSV-PR-12-1		Pressure Safety Valve	HWR-12 Primary Side Inlet Pressure Safety Valve					Kunkle	91	Mech	Mech	N/A	N/A		N/A		PSV	Future	1/6/2026			
PI-103	HTW	TI-HTW-11-1		Temperature Gauge	HWR-11 Secondary Side Inlet Temperature Gauge					Ashcroft, Petro's Plugs	81, 311	Mech	Mech	N/A	N/A		N/A		TI	Future	1/6/2026			
PI-103	HTW	TI-HTW-11-2		Temperature Gauge	HRU-11 Inlet Temperature Gauge					Ashcroft, Petro's Plugs	81, 311	Mech	Mech	N/A	N/A		N/A		TI	Future	1/6/2026			
PI-103	HTW	TI-HTW-11-3		Temperature Gauge	HRU-11 Outlet Temperature Gauge					Ashcroft, Petro's Plugs	81, 311	Mech	Mech	N/A	N/A		N/A		TI	Future	1/6/2026			
PI-103	HTW	TI-HTW-12-1		Temperature Gauge	HWR-12 Secondary Side Inlet Temperature Gauge					Ashcroft, Petro's Plugs	81, 311	Mech	Mech	N/A	N/A		N/A		TI	Future	1/6/2026			
PI-103	HTW	TI-HTW-12-2		Temperature Gauge	HRU-12 Inlet Temperature Gauge					Ashcroft, Petro's Plugs	81, 311	Mech	Mech	N/A	N/A		N/A		TI	Future	1/6/2026			
PI-103	HTW	TI-HTW-12-3		Temperature Gauge	HRU-12 Output Temperature Gauge					Ashcroft, Petro's Plugs	81, 311	Mech	Mech	N/A	N/A		N/A		TI	Future	1/6/2026			
PI-103	HTW	TI-SW-11-1		Temperature Gauge	HWR-11 Primary Side Inlet Temperature Gauge					Ashcroft, Petro's Plugs	81, 311	Mech	Mech	N/A	N/A		N/A		TI	Future	1/6/2026			
PI-103	HTW	TI-SW-11-2		Temperature Gauge	HWR-11 Primary Side Outlet Temperature Gauge					Ashcroft, Petro's Plugs	81, 311	Mech	Mech	N/A	N/A		N/A		TI	Future	1/6/2026			
PI-103	HTW	TI-SW-12-1		Temperature Gauge	HWR-12 Primary Side Inlet Temperature Gauge					Ashcroft, Petro's Plugs	81, 311	Mech	Mech	N/A	N/A		N/A		TI	Future	1/6/2026			
PI-103	HTW	TI-SW-12-2		Temperature Gauge	HWR-12 Primary Side Outlet Temperature Gauge					Ashcroft, Petro's Plugs	81, 311	Mech	Mech	N/A	N/A		N/A		TI	Future	1/6/2026			
PI-103	PWW	PI-PWW-1-1	LC-10-9	Pressure Gauge	PWWR-1 Secondary Side Inlet Pressure Gauge					Ashcroft, Petro's Plugs	1279, 251	Mech	Mech	N/A	N/A		N/A		PI	New	2/26/2026			
PI-103	HTW	FXV-HTW-11-1	FCV-HTW-11-1	Valve, Butterfly	HWR-11 Secondary Side Inlet Flow Valve Command		FO	1 = Close	Bray	valve series 40 +series 80 actuator		Dyco	Mech	DO	Hardwired	CHP CP	CHP_P1_DO07		7.9V	Future	1/6/2026 TBD Future		18/2	
PI-103	HTW	FXV-HTW-12-1	FCV-HTW-12-1	Valve, Butterfly	HWR-12 Secondary Side Inlet Flow Valve Command		FO	1 = Close	Bray	valve series 40 +series 80 actuator		Dyco	Mech	DO	Hardwired	CHP CP	CHP_P1_DO07		8.4V	Future	1/6/2026 TBD Future		18/2	
PI-103	HTW	FIT-HTW-11-1		Flow Transmitter	HWR-11 Secondary Side Inlet Flow Transmitter			TBD	GPM	Onicon	FT-3500	Dyco	Mech	AI	Hardwired	CHP CP	CHP_P2_A02		5 FIT	Future	1/6/2026 TBD Future		18TSP	
PI-103	HTW	FIT-HTW-12-1		Flow Transmitter	HWR-12 Secondary Side Inlet Flow Transmitter			TBD	GPM	Onicon	FT-3500	Dyco	Mech	AI	Hardwired	CHP CP	CHP_P2_A02		6 FIT	Future	1/6/2026 TBD Future		18TSP	
PI-103	HTW	TIT-HTW-11-2		Temperature Transmitter	HRU-11 Inlet Temperature Transmitter			TBD	°F	Rosemount	RTD: 214C TW:114C TT:644	Dyco	Mech	AI	Hardwired	CHP CP	CHP_P2_A02		11 TIT	Future	1/6/2026 TBD Future		18TSP	
PI-103	HTW	TIT-HTW-12-2		Temperature Transmitter	HRU-12 Inlet Temperature Transmitter			TBD	°F	Rosemount	RTD: 214C TW:114C TT:644	Dyco	Mech	AI	Hardwired	CHP CP	CHP_P2_A02		12 TIT	Future	1/6/2026 TBD Future		18TSP	
PI-103	HTW	TIT-HTW-11-3		Temperature Transmitter	HRU-11 Outlet Temperature Transmitter			TBD	°F	Rosemount	RTD: 214C TW:114C TT:644	Dyco	Mech	AI	Hardwired	CHP CP	CHP_P2_A02		15 TIT	Future	1/6/2026 TBD Future		18TSP	
PI-103	HTW	TIT-HTW-12-3		Temperature Transmitter	HRU-12 Outlet Temperature Transmitter			TBD	°F	Rosemount	RTD: 214C TW:114C TT:644	Dyco	Mech	AI	Hardwired	CHP CP	CHP_P2_A02		16 TIT	Future	1/6/2026 TBD Future		18TSP	
PI-103	HTW	TIT-SW-11-1		Temperature Transmitter	HWR-11 Primary Side Inlet Temperature Transmitter			TBD	°F	Rosemount	RTD: 214C TW:114C TT:644	Dyco	Mech	AI	Hardwired	CHP CP	CHP_P2_A03		3 TIT	Future	1/6/2026 TBD Future		18TSP	
PI-103	HTW	TIT-SW-12-1		Temperature Transmitter	HWR-12 Primary Side Inlet Temperature Transmitter			TBD	°F	Rosemount	RTD: 214C TW:114C TT:644	Dyco	Mech	AI	Hardwired	CHP CP	CHP_P2_A03		4 TIT	Future	1/6/2026 TBD Future		18TSP	
PI-103	HTW	TIT-SW-11-2		Temperature Transmitter	HWR-11 Primary Side Outlet Temperature Transmitter			TBD	°F	Rosemount	RTD: 214C TW:114C TT:644	Dyco	Mech	AI	Hardwired	CHP CP	CHP_P2_A03		7 TIT	Future	1/6/2026 TBD Future		18TSP	
PI-103	HTW	TIT-SW-12-2		Temperature Transmitter	HWR-12 Primary Side Outlet Temperature Transmitter			TBD	°F	Rosemount	RTD: 214C TW:114C TT:644	Dyco	Mech	AI	Hardwired	CHP CP	CHP_P2_A03		8 TIT	Future	1/6/2026 TBD Future		18TSP	
PI-103	HTW	TCV-11-1		Bypass Damper	HRU-11 Bypass Damper Position Command	HRU-11	0-100	%				Vendor	Vendor	AO	Hardwired	CHP CP	CHP_P2_AO04		3 TV	Future	1/6/2026 TBD Future		18TSP	
PI-103	HTW	TCV-12-1		Bypass Damper	HRU-12 Bypass Damper Position Command	HRU-12	0-100	%				Vendor	Vendor	AO	Hardwired	CHP CP	CHP_P2_AO04		2.7V	Future	1/6/2026 TBD Future		18TSP	
PI-103	HTW	TCV-HW-11-1		Temperature Valve, Three-Way	HWR-11 Primary Side Outlet /Bypass Valve Position Command		FO	0-100	%	Siemens	Flowrite VF 599	Dyco	Mech	AO	Hardwired	CHP CP	CHP_P2_AO06		4.7V	Future	2/26/2026 TBD Future		18TSP	
PI-103	HTW	TCV-HW-12-1		Temperature Valve, Three-Way	HWR-12 Primary Side Outlet /Bypass Valve Position Command		FO	0-100	%	Siemens	Flowrite VF 599	Dyco	Mech	AO	Hardwired	CHP CP	CHP_P2_AO06		7.7V	Future	2/26/2026 TBD Future		18TSP	
PI-105	PWW	FV-PW-1	FCV-PW-1	Flow Circuit Setter	PWWR-1 Secondary Side Flow Circuit Setter					Bell & Gossett	CB-6F	Mech	Mech	N/A	N/A		N/A		FCV	New	6/5/2026 POOL			
PI-105	PWW	FV-PW-2	FCV-PW-2	Flow Circuit Setter	PWWR-2 Secondary Side Flow Circuit Setter					Bell & Gossett	CB-6F	Mech	Mech	N/A	N/A		N/A		FCV	New	6/5/2026 POOL			
PI-105	PWW	FIT-PW-1		BTU, Flow Transmitter	Lazy River Flow Transmitter			TBD	GPM	Fisein /Rosemount	FLUXUS F721/TE ultrasonic flow meter + TIF Assembly	Dyco	Dyco	AI	Hardwired		N/A		FIT	New	6/5/2026 Pool Equipment Room	18TSP	
PI-105	PWW	FQIT-PW-1		BTU, Meter	Lazy River BTU Meter			TBD	TON	Fisein	BTU meter package hardware	Dyco	Dyco	AI	ENET		BOP_ENET		FQIT	New	6/5/2026 Pool Equipment Room	18TSP		
PI-105	PWW	FIT-PW-2		BTU, Flow Transmitter	Beach Flow Transmitter			TBD	GPM	Fisein /Rosemount	FLUXUS F721/TE ultrasonic flow meter + TIF Assembly	Dyco	Dyco	AI	Hardwired		N/A		FIT	New	6/5/2026 Pool Equipment Room	18TSP	
PI-105	PWW	FQIT-PW-2		BTU, Meter	Beach BTU Meter			TBD	TON	Fisein	BTU meter package hardware	Dyco	Dyco	AI	ENET		BOP_ENET		FQIT	New	6/5/2026 Pool Equipment Room	RS-485		
PI-105	PWW	PI-PW-2-1		Pressure Gauge	PWWR-2 Secondary Side Inlet Pressure Gauge					Ashcroft, Petro's Plugs	1279, 251	Mech	Mech	N/A	N/A		N/A		PI	New	2/26/2026 POOL			
PI-105	PWW	TCV-PW-1		Temperature Valve, Three-Way	PWWR-1 Secondary Side Outlet /Bypass Valve Position Command	FO	0-100	%	Siemens	Flowrite VF 599	Dyco	Mech	AO	Hardwired	POOL BO	POOL_AO03		1 TV	New	6/2/2026 POOL		18TSP		
PI-105

PI-107	LTWC	VSH-LTW-2-1	VSH-LTW-2	Vibration Switch	LTWC-2 Vibration Switch High	LTWC-2	0 = High				Vendor	Vendor	DI	Hardwired	CHP CP	CHP_P1_D006	8 VSH	New	2/26/2026 CHP Building Roof	18/3							
PI-107	LTWC	VSH-LTW-3-1	VSH-LTW-3	Vibration Switch	LTWC-3 Vibration Switch High	LTWC-3	0 = High				Vendor	Vendor	DI	Hardwired	CHP CP	CHP_P1_D006	9 VSH	Future	2/26/2026 TBD-Future	18/3							
PI-107	LTWC	ZSO-LTW-1-1	ZSH-LTW-1-1	Limit Switch, Valve Open	LTWC-1 Inlet Valve Open Confirm		with actuator				Dyna	Dyna	DI	Hardwired	CHP CP	CHP_P1_D006	10 ZSO	New	1/6/2026 CHP Building Roof	18/3							
PI-107	LTWC	ZSO-LTW-2-1	ZSH-LTW-2-1	Limit Switch, Valve Open	LTWC-2 Inlet Valve Open Confirm		with actuator				Dyna	Dyna	DI	Hardwired	CHP CP	CHP_P1_D006	11 ZSO	New	1/6/2026 CHP Building Roof	18/3							
PI-107	LTWC	ZSO-LTW-3-1	ZSH-LTW-3-1	Limit Switch, Valve Open	LTWC-3 Inlet Valve Open Confirm		with actuator				Dyna	Dyna	DI	Hardwired	CHP CP	CHP_P1_D006	12 ZSO	Future	1/6/2026 TBD-Future	18/3							
PI-107	LTWC	ZSC-LTW-1-1	ZSL-LTW-1-1	Limit Switch, Valve Closed	LTWC-1 Inlet Valve Close Confirm		with actuator				Dyna	Dyna	DI	Hardwired	CHP CP	CHP_P1_D006	13 ZSC	New	1/6/2026 CHP Building Roof	18/3							
PI-107	LTWC	ZSC-LTW-2-1	ZSL-LTW-2-1	Limit Switch, Valve Closed	LTWC-2 Inlet Valve Close Confirm		with actuator				Dyna	Dyna	DI	Hardwired	CHP CP	CHP_P1_D006	14 ZSC	New	1/6/2026 CHP Building Roof	18/3							
PI-107	LTWC	ZSC-LTW-3-1	ZSL-LTW-3-1	Limit Switch, Valve Closed	LTWC-3 Inlet Valve Close Confirm		with actuator				Dyna	Dyna	DI	Hardwired	CHP CP	CHP_P1_D006	15 ZSC	Future	1/6/2026 TBD-Future	18/3							
PI-107	LTWC	SIC-LTWC-1	VFD		LTWC-1 Fan Speed Command	LTWC-1	0-100 %	ABB	ACH580		Mech	Mech	AO	ENET		CHP_RX_ENOT	SIC	New	1/6/2026 CHP Building Roof	CAT6							
PI-107	LTWC	SIC-LTWC-2	VFD		LTWC-2 Fan Speed Command	LTWC-2	0-100 %	ABB	ACH580		Mech	Mech	AO	ENET		CHP_RX_ENOT	SIC	Future	1/6/2026 TBD-Future	CAT6							
PI-107	LTWC	TI-LTW-1	TI-XX1	Temperature Gauge	LTW Temperature Gauge				Anticraft, Pete's Plugs, EL 311		Mech	Mech	N/A	N/A		N/A	TI	New	1/6/2026							
PI-107	LTWC	FXV-LTW-1-1	FXV-LTW-1	Valve, Butterfly	LTWC-1 Inlet Valve Command		FO 1 = Close	Bray	valve series 40 series 90 actuator		Dyna	Mech	DO	Hardwired	CHP CP	CHP_P1_D008	5 XV	New	1/6/2026 CHP Building Roof	18/3							
PI-107	LTWC	FXV-LTW-2-1	FXV-LTW-2	Valve, Butterfly	LTWC-2 Inlet Valve Command		FO 1 = Close	Bray	valve series 40 series 90 actuator		Dyna	Mech	DO	Hardwired	CHP CP	CHP_P1_D008	6 XV	New	1/6/2026 CHP Building Roof	18/3							
PI-107	LTWC	FXV-LTW-3-1	FXV-LTW-3	Valve, Butterfly	LTWC-3 Inlet Valve Command		FO 1 = Close	Bray	valve series 40 series 90 actuator		Dyna	Mech	DO	Hardwired	CHP CP	CHP_P1_D008	7 XV	Future	1/6/2026 TBD-Future	18/3							
PI-107	LTWC	TIT-LTW-1-1		Temperature Transmitter	LTWC-1 Outlet Temperature Transmitter		TBD °F	Rosemount	RTD 2l6C TW-114C TT-644		Dyna	Mech	AI	Hardwired	CHP CP	CHP_P2_A65	0 TIT	New	1/6/2026 CHP Building Roof	18TSP							
PI-107	LTWC	TIT-LTW-2-1		Temperature Transmitter	LTWC-2 Outlet Temperature Transmitter		TBD °F	Rosemount	RTD 2l6C TW-114C TT-644		Dyna	Mech	AI	Hardwired	CHP CP	CHP_P2_A65	1 TIT	New	1/6/2026 CHP Building Roof	18TSP							
PI-107	LTWC	TIT-LTW-3-1		Temperature Transmitter	LTWC-3 Outlet Temperature Transmitter		TBD °F	Rosemount	RTD 2l6C TW-114C TT-644		Dyna	Mech	AI	Hardwired	CHP CP	CHP_P2_A65	2 TIT	Future	1/6/2026 TBD-Future	18TSP							
PI-108	EXHAUST	ZSO-DA-9	ZSH-DA-9	Limit Switch, Valve Open	DF-9 Flow Control Valve Open Confirm		with actuator				Dyna	Dyna	DI	Hardwired	CHP CP	CHP_P1_D05	1 ZSO	New	2/26/2026 CHP Building Roof	19/3							
PI-108	EXHAUST	ZSO-DA-10	ZSH-DA-10	Limit Switch, Valve Open	DF-10 Flow Control Valve Open Confirm		with actuator				Dyna	Dyna	DI	Hardwired	CHP CP	CHP_P1_D05	2 ZSO	New	2/26/2026 CHP Building Roof	19/3							
PI-108	EXHAUST	ZSO-DA-11	ZSH-DA-11	Limit Switch, Valve Open	DF-11 Flow Control Valve Open Confirm		with actuator				Dyna	Dyna	DI	Hardwired	CHP CP	CHP_P1_D05	3 ZSO	New	2/26/2026 CHP Building Roof	19/3							
PI-108	EXHAUST	ZSO-DA-12	ZSH-DA-12	Limit Switch, Valve Open	DF-12 Flow Control Valve Open Confirm		with actuator				Dyna	Dyna	DI	Hardwired	CHP CP	CHP_P1_D05	4 ZSO	New	2/26/2026 CHP Building Roof	19/3							
PI-108	EXHAUST	ZSC-DA-9	ZSL-DA-9	Limit Switch, Valve Closed	DF-9 Flow Control Valve Close Confirm		with actuator				Dyna	Dyna	DI	Hardwired	CHP CP	CHP_P1_D05	5 ZSC	New	2/26/2026 CHP Building Roof	19/3							
PI-108	EXHAUST	ZSC-DA-10	ZSL-DA-10	Limit Switch, Valve Closed	DF-10 Flow Control Valve Close Confirm		with actuator				Dyna	Dyna	DI	Hardwired	CHP CP	CHP_P1_D05	6 ZSC	New	2/26/2026 CHP Building Roof	19/3							
PI-108	EXHAUST	ZSC-DA-11	ZSL-DA-11	Limit Switch, Valve Closed	DF-11 Flow Control Valve Close Confirm		with actuator				Dyna	Dyna	DI	Hardwired	CHP CP	CHP_P1_D05	7 ZSC	New	2/26/2026 CHP Building Roof	19/3							
PI-108	EXHAUST	ZSC-DA-12	ZSL-DA-12	Limit Switch, Valve Closed	DF-12 Flow Control Valve Close Confirm		with actuator				Dyna	Dyna	DI	Hardwired	CHP CP	CHP_P1_D05	8 ZSC	New	2/26/2026 CHP Building Roof	19/3							
PI-108	EXHAUST	SIC-DF-10	VFD		DF-10 Speed Command		0-100 %	ABB	ACH580		Mech	Mech	AO	ENET		CHP_RX_ENOT	SIC	New	2/26/2026 CHP Building Roof	CAT6							
PI-108	EXHAUST	SIC-DF-11	VFD		DF-11 Speed Command		0-100 %	ABB	ACH580		Mech	Mech	AO	ENET		CHP_RX_ENOT	SIC	New	2/26/2026 CHP Building Roof	CAT6							
PI-108	EXHAUST	SIC-DF-12	VFD		DF-12 Speed Command		0-100 %	ABB	ACH580		Mech	Mech	AO	ENET		CHP_RX_ENOT	SIC	New	2/26/2026 CHP Building Roof	CAT6							
PI-108	EXHAUST	SIC-DF-9	VFD		DF-9 Speed Command		0-100 %	ABB	ACH580		Mech	Mech	AO	ENET		CHP_RX_ENOT	SIC	New	2/26/2026 CHP Building Roof	CAT6							
PI-108	EXHAUST	TIT-EH-10-1		Temperature Transmitter	SCR-10 Inlet Exhaust Temperature		TBD °F	Rosemount	RTD 2l6C TW-114C TT-644		Dyna	Mech	AI	Hardwired		UCP10	TIT	New	1/6/2026 CHP Building Roof	18TSP							
PI-108	EXHAUST	TIT-EH-10-2		Temperature Transmitter	SCR-10 Outlet Exhaust Temperature		TBD °F	Rosemount	RTD 2l6C TW-114C TT-644		Dyna	Mech	AI	Hardwired		UCP10	TIT	New	1/6/2026 CHP Building Roof	18TSP							
PI-108	EXHAUST	FXV-DA-9		Valve, Butterfly	DF-9 Flow Valve Command		FO 1 = Close	Bray	valve series 40 series 90 actuator		Dyna	Mech	DO	Hardwired	CHP CP	CHP_P1_D007	8 XV	New	2/26/2026 CHP Building Roof	19/3							
PI-108	EXHAUST	FXV-DA-10		Valve, Butterfly	DF-10 Flow Valve Command		FO 1 = Close	Bray	valve series 40 series 90 actuator		Dyna	Mech	DO	Hardwired	CHP CP	CHP_P1_D007	9 XV	New	2/26/2026 CHP Building Roof	19/3							
PI-108	EXHAUST	FXV-DA-11		Valve, Butterfly	DF-11 Flow Valve Command		FO 1 = Close	Bray	valve series 40 series 90 actuator		Dyna	Mech	DO	Hardwired	CHP CP	CHP_P1_D007	10 XV	New	2/26/2026 CHP Building Roof	19/3							
PI-108	EXHAUST	FXV-DA-12		Valve, Butterfly	DF-12 Flow Valve Command		FO 1 = Close	Bras	valve series 40 series 90 actuator		Dyna	Mech	DO	Hardwired	CHP CP	CHP_P1_D007	11 XV	New	2/26/2026 CHP Building Roof	19/3							
PI-108	EXHAUST	XS-10		Ultra Skid Status	UCDP-10 Status	UCDP-10	1 = Running				Vendor	Vendor	AI	ENET	CHP CP	CHP_P1_D_ENOT	N/A XS	New	1/6/2026 CHP Building Roof	18/3							
PI-108	EXHAUST	XS-11		Ultra Skid Status	UCDP-11 Status	UCDP-11	1 = Running				Vendor	Vendor	AI	ENET	CHP CP	CHP_P1_D_ENOT	N/A XS	Future	1/6/2026 TBD-Future	18/3							
PI-108	EXHAUST	XS-12		Ultra Skid Status	UCDP-12 Status	UCDP-12	1 = Running				Vendor	Vendor	AI	ENET	CHP CP	CHP_P1_D_ENOT	N/A XS	Future	1/6/2026 TBD-Future	18/3							
PI-108	EXHAUST	XS-9		Ultra Skid Status	UCDP-9 Status	UCDP-9	1 = Running				Vendor	Vendor	AI	ENET	CHP CP	CHP_P1_D_ENOT	N/A XS	New	1/6/2026 CHP Building Roof	18/3							
PI-108	EXHAUST	TIT-EH-11-1		Temperature Transmitter	SCR-11 Inlet Exhaust Temperature		TBD °F	Rosemount	RTD 2l6C TW-114C TT-644		Dyna	Mech	AI	Hardwired		UCP11	TIT	Future	1/6/2026 TBD-Future	18TSP							
PI-108	EXHAUST	TIT-EH-11-2		Temperature Transmitter	SCR-11 Outlet Exhaust Temperature		TBD °F	Rosemount	RTD 2l6C TW-114C TT-644		Dyna	Mech	AI	Hardwired		UCP11	TIT	Future	1/6/2026 TBD-Future	18TSP							
PI-108	EXHAUST	TIT-EH-12-1		Temperature Transmitter	SCR-12 Inlet Exhaust Temperature		TBD °F	Rosemount	RTD 2l6C TW-114C TT-644		Dyna	Mech	AI	Hardwired		UCP12	TIT	Future	1/6/2026 TBD-Future	18TSP							
PI-108	EXHAUST	TIT-EH-12-2		Temperature Transmitter	SCR-12 Outlet Exhaust Temperature		TBD °F	Rosemount	RTD 2l6C TW-114C TT-644		Dyna	Mech	AI	Hardwired		UCP12	TIT	Future	1/6/2026 TBD-Future	18TSP							
PI-108	EXHAUST	PDT-EG-9		Diff Pressure Transmitter	SCR-9 Differential Pressure Transmitter		TBD PSIG	Rosemount	3051CD		Dyna	Mech	AI	Hardwired	CHP CP	CHP_P2_A61	0 PDT	New	1/6/2026 CHP Building Roof	18TSP							
PI-108	EXHAUST	TIT-EH-9-1		Temperature Transmitter	SCR-9 Inlet Exhaust Temperature		TBD °F	Rosemount	RTD 2l6C TW-114C TT-644		Dyna	Mech	AI	Hardwired		UCP9	TIT	New	1/6/2026 CHP Building Roof	18TSP							
PI-108	EXHAUST	TIT-EH-9-2		Temperature Transmitter	SCR-9 Outlet Exhaust Temperature		TBD °F	Rosemount	RTD 2l6C TW-114C TT-644		Dyna	Mech	AI	Hardwired		UCP9	TIT	New	1/6/2026 CHP Building Roof	18TSP							
PI-108	EXHAUST	PDT-EG-10		Diff Pressure Transmitter	SCR-10 Differential Pressure Transmitter		TBD PSIG	Rosemount	3051CD		Dyna	Mech	AI	Hardwired	CHP CP	CHP_P2_A61	1 PDT	New	1/6/2026 CHP Building Roof	18TSP							
PI-108	EXHAUST	Sample Port			SCR-10 Outlet Exhaust Sample Tube						Mech	Mech	N/A	N/A		N/A	XI	New	1/6/2026								
PI-108	EXHAUST	XE-EH-10-1			Sample Port						Mech	Mech	N/A	N/A		N/A	XE	Future	1/6/2026								
PI-108	EXHAUST	XE-EH-10-2			Sample Port						Mech	Mech	N/A	N/A		N/A	XE	Future	1/6/2026								
PI-108	EXHAUST	XE-EH-9-1			Sample Port						Mech	Mech	N/A	N/A		N/A	XE	New	1/6/2026								
PI-108	EXHAUST	PDT-EG-11		Diff Pressure Transmitter	SCR-11 Differential Pressure Transmitter		TBD PSIG	Rosemount	3051CD		Dyna	Mech	AI	Hardwired	CHP CP	CHP_P2_A61	2 PDT	Future	1/6/2026 TBD-Future	18TSP							
PI-108	EXHAUST	PDT-EG-12		Diff Pressure Transmitter	SCR-12 Differential Pressure Transmitter		TBD PSIG	Rosemount	3051CD		Dyna	Mech	AI	Hardwired	CHP CP	CHP_P2_A61	3 PDT	Future	1/6/2026 TBD-Future	18TSP							
PI-108	EXHAUST	TIT-EH-9-3		Temperature Transmitter	HRU-9 Outlet Exhaust Temperature		TBD °F	Rosemount	RTD 2l6C TW-114C TT-644		Dyna	Mech	AI	Hardwired	CHP CP	CHP_P2_A61	4 TIT	New	2/26/2026 CHP Building Roof	18TSP							
PI-108	EXHAUST	TIT-EH-10-3		Temperature Transmitter	HRU-10 Outlet Exhaust Temperature		TBD °F	Rosemount	RTD 2l6C TW-114C TT-644		Dyna	Mech	AI	Hardwired	CHP CP	CHP_P2_A61	5 TIT	New	2/26/2026 CHP Building Roof	18TSP							
PI-108	EXHAUST	TIT-EH-11-3		Temperature Transmitter	HRU-11 Outlet Exhaust Temperature		TBD °F	Rosemount	RTD 2l6C TW-114C TT-644		Dyna	Mech	AI	Hardwired	CHP CP	CHP_P2_A61	6 TIT	Future	2/26/2026 TBD-Future	18TSP							
PI-108	EXHAUST	TIT-EH-12-3		Temperature Transmitter	HRU-12 Outlet Exhaust Temperature		TBD °F	Rosemount	RTD 2l6C TW-114C TT-644		Dyna	Mech	AI	Hardwired	CHP CP	CHP_P2_A61	7 TIT	Future	2/26/2026 TBD-Future	18TSP							
PI-109	LO WO	XSF-CV-9		Motor Starter	EG-9 Crankcase Vent Mist Eliminator Run Confirm	EG-9	1 = Running	with Motor starter			Mech	Mech	DI	Hardwired	CHP CP	CHP_P1_D05	20 XS	New	2/12/2026 Generator Room 155	18/3							
PI-109	LO WO	XSF-CV-10		Motor Starter	EG-10 Crankcase Vent Mist Eliminator Run Confirm	EG-10	1 = Running	with Motor starter			Mech	Mech	DI	Hardwired	CHP CP	CHP_P1_D05	20 XS	New	2/12/2026 Generator Room 155	18/3							
PI-109	LO WO	XSF-CV-11		Motor Starter	EG-11 Crankcase Vent Mist Eliminator Run Confirm	EG-11	1 = Running	with Motor starter			Mech	Mech	DI	Hardwired	CHP CP	CHP_P1_D05	21 XS	Future	2/12/2026 TBD-Future	18/3							
PI-109	LO WO	XSF-CV-12		Motor Starter	EG-12 Crankcase Vent Mist Eliminator Run Confirm	EG-12	1 = Running	with Motor starter			Mech	Mech	DI	Hardwired	CHP CP	CHP_P1_D05	22 XS	Future	2/12/2026 TBD-Future	18/3							
PI-109	LO WO	XS-LO-8-1	XS-LO-9	Leak Switch	T-LO-8 Leak Switch	T-LO-8	0 = Leak				Vendor	Vendor	DI	Hardwired	CHP CP	CHP_P1_D05	22 XS	New	1/6/2026 Generator Room 155	18/3							
PI-109	LO WO	XS-LO-10-1	XS-LO-10	Leak Switch	T-LO-10 Leak Switch	T-LO-10	0 = Leak				Vendor	Vendor	DI	Hardwired	CHP CP	CHP_P1_D05	23 XS	New	1/6/2026 Generator Room 155	18/3							
PI-109	LO WO	XS-LO-11-1	XS-LO-11	Leak Switch	T-LO-11 Leak Switch	T-LO-11	0 = Leak				Vendor	Vendor	DI	Hardwired	CHP CP	CHP_P1_D05	24 XS	Future	1/6/2026 TBD-Future	18/3							
PI-109	LO WO	XS-LO-12-1	XS-LO-12	Leak Switch	T-LO-12 Leak Switch	T-LO-12	0 = Leak				Vendor	Vendor	DI	Hardwired	CHP CP	CHP_P1_D05	25 XS	Future	1/6/2026 TBD-Future	18/3							
PI-109	LO WO	XS-WO-8-1	XS-WO-9	Leak Switch	T-WO-9 Leak Switch	T-WO-9	0 = Leak				Vendor	Vendor	DI	Hardwired	CHP CP	CHP_P1_D05	26 XS	New	1/6/2026 Generator Room 155	18/3							
PI-109	LO WO	XS-WO-10-1	XS-WO-10	Leak Switch	T-WO-10 Leak Switch	T-WO-10	0 = Leak				Vendor	Vendor	DI	Hardwired	CHP CP	CHP_P1_D05	27 XS	New	1/6/2026 Generator Room 155	18/3							
PI-109	LO WO	XS-WO-11-1	XS-WO-11	Leak Switch	T-WO-11 Leak Switch	T-WO-11	0 = Leak				Vendor	Vendor	DI	Hardwired	CHP CP	CHP_P1_D05	28 XS	New	1/6/2026 Generator Room 155	18/3							
PI-109	LO WO	XS-WO-12-1	XS-WO-12	Leak Switch	T-WO-12 Leak Switch	T-WO-12	0 = Leak				Vendor	Vendor	DI	Hardwired	CHP CP	CHP_P1_D05	29 XS	Future	1/6/2026 TBD-Future	18/3							
PI-109	LO WO	LC-LO-10-1	LC-LO-10	Level Controller	EG-10 Lo Level Controller	EG-10					Vendor	Vendor	DO	Hardwired		EG-10	LC	New	1/6/2026 Generator Room 155	19/3							
PI-109	LO WO	LC-LO-11-1	LC-LO-11	Level Controller	EG-11 Lo Level Controller	EG-11					Vendor	Vendor	DO	Hardwired		EG-11	LC	Future	1/6/2026 TBD-Future	19/3							
PI-109	LO WO	LC-LO-12-1	LC-LO-12	Level Controller	EG-12 Lo Level Controller	EG-12					Vendor	Vendor	DO	Hardwired		EG-12	LC	Future	1/6/2026 TBD-Future	19/3							
PI-109	LO WO	LC-LO-9-1	LC-LO-9	Level Controller	EG-9 Lo Level Controller	EG-9					Vendor	Vendor	DO	Hardwired		EG-9	LC	New	1/6/2026 Generator Room 155	19/3							
PI-109	LO WO	LE-LO-10-1		Level Element	T-LO-10 Level Element	T-LO-10					Vendor	Vendor	N/A	N/A		N/A	LE	New	2/5/2026								
PI-109	LO WO	LE-LO-11-1		Level Element	T-LO-11 Level Element	T-LO-11					Vendor	Vendor	N/A	N/A		N/A	LE	Future	2/5/2026								
PI-109	LO WO	LE-LO-12-1		Level Element	T-LO-12 Level Element	T-LO-12					Vendor	Vendor	N/A	N/A		N/A	LE	Future	2/5/2026								
PI-109	LO WO	LE-LO-9-1	LE-XX1	Level Element	T-LO-9 Level Element	T-LO-9					Vendor	Vendor	N/A	N/A		N/A	LE	New	2/5/2026								
PI-109	LO WO	LE-WO-10-1		Level Element	T-WO-10 Level Element	T-WO-10					Vendor	Vendor	N/A	N/A		N/A	LE	New	2/5/2026								
PI-109	LO WO	LE-WO-11-1		Level Element	T-WO-11 Level Element	T-WO-11					Vendor	Vendor	N/A	N/A		N/A	LE	Future	2/5/2026								
PI-109	LO WO	LE-WO-12-1		Level Element	T-WO-12 Level Element	T-WO-12					Vendor	Vendor	N/A	N/A		N/A	LE	Future	2/5/2026								
PI-109	LO WO	LE-WO-9-1	LE-XX2	Level Element	T-WO-9 Level Element	T-WO-9					Vendor	Vendor	N/A	N/A		N/A	LE	New	2/5/2026								
PI-109	LO WO	LG-LO-10-1	LG-LO-10	Level Gauge	T-LO-10 Level Gauge	T-LO-10					Vendor	Vendor	N/A	N/A		N/A	LE	New	2/5/2026								
PI-109	LO WO	LG-LO-11-1	LG-LO-11	Level Gauge	T-LO-11 Level Gauge	T-LO-11					Vendor	Vendor	N/A	N/A		N/A	LE	Future	2/5/2026								
PI-109	LO WO	LG-LO-12-1	LG-LO-12	Level Gauge	T-LO-12 Level Gauge	T-LO-12					Vendor	Vendor	N/A	N/A		N/A	LE	Future	2/5/2026								
PI-109	LO WO	LG-LO-9-1	LG-LO-9	Level Gauge	T-LO-9 Level Gauge	T-LO-9					Vendor	Vendor	N/A	N/A		N/A	LE	New	2/5/2026								
PI-109	LO WO	LG-WO-10-1	LG-WO-10	Level Gauge	T-WO-10 Level Gauge	T-WO-10					Vendor	Vendor	N/A	N/A		N/A	LE	New	2/5/2026								
PI-109	LO WO	LG-WO-11-1	LG-WO-11	Level Gauge	T-WO-11 Level Gauge	T-WO-11					Vendor	Vendor	N/A	N/A		N/A	LE	Future	2/5/2026								
PI-109	LO WO	LG-WO-12-1	LG-WO-12	Level Gauge	T-WO-12 Level Gauge	T-WO-12					Vendor	Vendor	N/A	N/A		N/A	LE	Future	2/5/2026								
PI-109	LO WO	LG-WO-9-1	LG-WO-9	Level Gauge	T-WO-9 Level Gauge	T-WO-9					Vendor	Vendor	N/A	N/A		N/A	LE	New	2/5/2026								
PI-109	LO WO	XC-EG09-01	EG-Run Permissive		EG9 Run Permissive	EG9 Run Permissive		1 = On			Vendor	Vendor	DO	Hardwired	CHP CP	CHP_P1_D007	9 XC	New	1/6/2026 Generator Room 155	19/3	Run permissive based on LO level.							
PI-109	LO WO	XC-EG10-01	EG-Run Permissive		EG10 Run Permissive	EG10 Run Permissive		1 = On			Vendor	Vendor	DO	Hardwired	CHP CP	CHP_P1_D007	10 XC	New	1/6/2026 Generator Room 155	19/3	Run permissive based on LO level.							
PI-109	LO WO	XC-EG11-01	EG-Run Permissive		EG11 Run Permissive	EG11 Run Permissive		1 = On			Vendor	Vendor	DO	Hardwired	CHP CP	CHP_P1_D007	11 XC	Future	1/6/2026 Generator Room 155	19/3	Run permissive based on LO level.							
PI-109	LO WO	XC-EG12-01	EG-Run Permissive		EG12 Run Permissive	EG12 Run Permissive		1 = On			Vendor	Vendor	DO	Hardwired	CHP CP	CHP_P1_D007	12 XC	Future	1/6/2026 Generator Room 155	19/3	Run permissive based on LO level.							
PI-109	LO WO	XCF-CV-9		Motor Starter	EG-9 Crankcase Vent Mist Eliminator Start Command	EG-9	1 = Start				Mech	Mech	DO	Hardwired	CHP CP	CHP_P1_D007	12 XC	New	2/12/2026 Generator Room 155	19/3							
PI-109	LO WO	XCF-CV-10		Motor Starter	EG-10 Crankcase Vent Mist Eliminator Start Command	EG-10	1 = Start				Mech	Mech	DO	Hardwired	CHP CP	CHP_P1_D007	14 XC	New	2/12/2026 Generator Room 155	19/3							
PI-109	LO WO	XCF-CV-11		Motor Starter	EG-11 Crankcase Vent Mist Eliminator Start Command	EG-11	1 = Start				Mech	Mech	DO	Hardwired	CHP CP	CHP_P1_D007	15 XC	Future	2/12/2026 TBD-Future	19/3							
PI-109	LO WO	XCF-CV-12		Motor Starter	EG-12 Crankcase Vent Mist Eliminator Start Command	EG-12	1 = Start				Mech	Mech	DO	Hardwired	CHP CP	CHP_P1_D008	0 XC	Future	2/12/2026 TBD-Future	19/3							
PI-109	LO WO	LT-LO-12-2		Level Transmitter	T-LO-12 Drip Tank Level Transmitter	T-LO-12	0-100 %				Vendor	Vendor	AI	Hardwired		LO	LT	Future	1/6/2026 TBD-Future	18TSP							
PI-109	LO WO	LT-LO-12-1		Level Transmitter	T-LO-12 Drip Tank Level Transmitter	T-LO-12	0-100 %				Vendor	Vendor	AI	Hardwired		LO	LT	New	2/10/2026 TBD-Future	18TSP							
PI-109	LO WO	LT-LO-9-2		Level Transmitter	T-LO-9 Drip Tank Level Transmitter	T-LO-9	0-100 %				Vendor	Vendor	AI	Hardwired		LO	LT	New	1/6/2026 Generator Room 155	18TSP							
PI-109	LO WO	LT-LO-9-1		Level Transmitter	T-LO-9 Drip Tank Level Transmitter	T-LO-9	0-100 %				Vendor	Vendor	AI	Hardwired		LO	LT	New	2/10/2026 Generator Room 155	18TSP							
PI-109	LO WO	LT-LO-10-1		Level Transmitter	T-LO-10 Level Transmitter	T-LO-10	0-100 %				Vendor	Vendor	AI	Hardwired		LO	LT	New	1/6/2026 Generator Room 155	18TSP							
PI-109	LO WO	LT-LO-11-1		Level Transmitter	T-LO-11 Level Transmitter	T-LO-11	0-100 %				Vendor	Vendor	AI	Hardwired		LO	LT	Future	2/10/2026 TBD-Future	18TSP							
PI-109	LO WO	LT-LO-12-1		Level Transmitter	T-LO-12 Level Transmitter	T-LO-12	0-100 %				Vendor	Vendor	AI	Hardwired		LO	LT	Future	2/10/2026 TBD-Future	18TSP							
PI-109	LO WO	LT-LO-9-1	LT-XX1	Level Transmitter	T-LO-9 Level Transmitter	T-LO-9	0-100 %				Vendor	Vendor	AI	Hardwired		LO	LT	New	2/10/2026 Generator Room 155	18TSP							
PI-109	LO WO	LT-WO-10-1		Level Transmitter	T-WO-10 Level Transmitter	T-WO-10	0-100 %				Vendor	Vendor	AI	Hardwired		LO	LT	New	2/10/2026 Generator Room 155	18TSP							
PI-109	LO WO	LT-WO-11-1		Level Transmitter	T-WO-11 Level Transmitter	T-WO-11	0-100 %				Vendor	Vendor	AI	Hardwired		LO	LT	Future	2/10/2026 TBD-Future	18TSP							
PI-109	LO WO	LT-WO-12-1		Level Transmitter	T-WO-12 Level Transmitter	T-WO-12	0-100 %				Vendor	Vendor	AI	Hardwired		LO	LT	Future	2/10/2026 TBD-Future	18TSP							
PI-109	LO WO	LT-WO-9-1	LT-XX2	Level Transmitter	T-WO-9 Level Transmitter	T-WO-9	0-100 %				Vendor	Vendor	AI	Hardwired		LO	LT	New	2/10/2026 Generator Room 155	18TSP							
PI-109	LO WO	XE-LO-10	XE-LO-10	Sample Port	T-LO-10 Lab Sample Port	T-LO-10					Vendor	Vendor	N/A	N/A		N/A	XE	New	1/6/2026								
PI-109	LO WO	XE-LO-11	XE-LO-11	Sample Port	T-LO-11 Lab Sample Port	T-LO-11					Vendor	Vendor	N/A	N/A		N/A	XE	Future	1/6/2026								
PI-109	LO WO	XE-LO-12	XE-LO-12	Sample Port	T-LO-12 Lab Sample Port	T-LO-12					Vendor	Vendor	N/A	N/A		N/A	XE	Future	1/6/2026								
PI-109	LO WO	XE-LO-9	XE-LO-9	Sample Port	T-LO-9 Lab Sample Port	T-LO-9					Vendor	Vendor	N/A	N/A		N/A	XE	New	1/6/2026								
PI-109	LO WO	XE-WO-10	XE-WO-10	Sample Port	T-WO-10 Lab Sample Port	T-WO-10					Vendor	Vendor	N/A	N/A		N/A	XE	New	1/6/2026								
PI-109	LO WO	XE-WO-11	XE-WO-11	Sample Port	T-WO-11 Lab Sample Port	T-WO-11					Vendor	Vendor	N/A	N/A		N/A	XE	Future	1/6/2026								
PI-109	LO WO	XE-WO-12	XE-WO-12	Sample Port	T-WO-12 Lab Sample Port	T-WO-12					Vendor	Vendor	N/A	N/A		N/A	XE	Future	1/6/2026								
PI-109	LO WO	XE-WO-9	XE-WO-9	Sample Port	T-WO-9 Lab Sample Port	T-WO-9					Vendor	Vendor	N/A	N/A		N/A

PP-111	UREA	LT-UR-9	LT-UR-1	Level Transmitter	T-UR-9 Urea Tank Level Transmitter	0-100	%	Rosemount	3051C	Dyna	Mech	AI	Hardwired	CHP-CP	CHP_R2_A001		2-17	New	1/6/2026 Equipment Yard 111	18/SP	
TBD	FUEL GAS	EPO-CHP-1A		Estop	CHP Control Room Estop	0 = Estop		Allen-Bradley	800T-FBN7M24	Dyna	Dyna	DI	Hardwired	CHP-CP	CHP_CSR01	TBD	HS	New	3/19/2026 CHP Control Room 101	19/2	
TBD	FUEL GAS	EPO-CHP-1B		Estop	CHP Building Estop	0 = Estop		Allen-Bradley	800T-FBN7M24	Dyna	Dyna	DI	Hardwired	CHP-CP	CHP_CSR01	TBD	HS	New	3/19/2026 CHP Control Room 101	19/2	
TBD	FUEL GAS	EPO-BESS-1		Estop	BESS Estop	0 = Estop		Allen-Bradley	800T-FBN7M24	Dyna	Dyna	DI	Hardwired	CHP-CP	CHP_CSR01	TBD	HS	New	3/19/2026 CHP Control Room 101	19/2	
TBD	TBD	XS-BAT-1		Contact	Battery Room 109 Status	0 = Alarm				GEN	GEN	DI	Hardwired	CHP-CP	CHP_CSR01		8 XS	new	1/12/2026 Batt Room 109	19/2	Alarm contact for status only. Gas detection and mitigation is by others.
TBD	TBD	XS-BAT-2		Contact	Battery Room 109 Status	0 = Alarm				GEN	GEN	DI	Hardwired	CHP-CP	CHP_CSR01		9 XS	new	1/12/2026 Batt Room 109	19/2	Alarm contact for status only. Gas detection and mitigation is by others.
TBD	TBD	XS-UPS-1		Contact	UPS Normal					GEN	GEN	DI	Hardwired	CHP-CP	CHP_R1_D406		16 XS	New	1/27/2026 UPS Room 107	19/2	
TBD	TBD	XS-UPS-2		Contact	UPS Bypass					GEN	GEN	DI	Hardwired	CHP-CP	CHP_R1_D406		17 XS	New	1/27/2026 UPS Room 107	19/2	
TBD	TBD	XS-UPS-3		Contact	UPS Alarm					GEN	GEN	DI	Hardwired	CHP-CP	CHP_R1_D406		18 XS	New	1/27/2026 UPS Room 107	19/2	
TBD	FUEL GAS	AIT-FG-8		LEL Transmitter	EG-8 LEL Transmitter	TBD	%	Draeger	Polytron 8200	Dyna	Dyna	AI	Hardwired	CHP-CP	CHP_R2_A001		8 AIT	New	1/12/2026 Generator Room 105	19/SP	
TBD	FUEL GAS	AIT-FG-10		LEL Transmitter	EG-10 LEL Transmitter	TBD	%	Draeger	Polytron 8200	Dyna	Dyna	AI	Hardwired	CHP-CP	CHP_R2_A001		9 AIT	New	1/12/2026 Generator Room 105	19/SP	
TBD	FUEL GAS	AIT-FG-9		LEL Transmitter	EG-11 LEL Transmitter	TBD	%	Draeger	Polytron 8200	Dyna	Dyna	AI	Hardwired	CHP-CP	CHP_R2_A001		8 AIT	Future	1/12/2026 Generator Room 105	19/SP	
TBD	FUEL GAS	AIT-FG-11		LEL Transmitter	EG-12 LEL Transmitter	TBD	%	Draeger	Polytron 8200	Dyna	Dyna	AI	Hardwired	CHP-CP	CHP_R2_A001		9 AIT	Future	1/12/2026 Generator Room 105	19/SP	
TBD	ENGINES	JT-8-1		Power Transmitter	EG-8 KW Output	0-2000	KW			Dyna	Dyna	AI	Hardwired	CHP-CP	CHP_R2_A001		5 JT	New	1/6/2026 Generator Room 105	19/SP	
TBD	ENGINES	JT-10-1		Power Transmitter	EG-10 KW Output	0-2000	KW			Dyna	Dyna	AI	Hardwired	CHP-CP	CHP_R2_A001		6 JT	New	1/6/2026 Generator Room 105	19/SP	
TBD	ENGINES	JT-9-1		Power Transmitter	EG-11 KW Output	0-2000	KW			Dyna	Dyna	AI	Hardwired	CHP-CP	CHP_R2_A001		5 JT	Future	1/6/2026 Generator Room 105	19/SP	
TBD	ENGINES	JT-11-1		Power Transmitter	EG-12 KW Output	0-2000	KW			Dyna	Dyna	AI	Hardwired	CHP-CP	CHP_R2_A001		6 JT	Future	1/6/2026 Generator Room 105	19/SP	
TBD	FUEL GAS	YL-FG-1A		Alarm Light & Horn	1E Door Interior Alarm Light & Horn	1 = On		Allen-Bradley	800T-QH2A	Dyna	Dyna	DO	Hardwired	CHP-CP	CHP_SR01		1 YL	New	1/12/2026 Generator Room 105	19/2	
TBD	FUEL GAS	YL-FG-1B		Alarm Light & Horn	1E Door Interior Alarm Light & Horn	1 = On		Allen-Bradley	800T-QH2A	Dyna	Dyna	DO	Hardwired	CHP-CP	CHP_SR01		1 YL	New	1/12/2026 Generator Room 105	19/2	
TBD	FUEL GAS	YL-FG-2A		Alarm Light & Horn	S Door Interior Alarm Light & Horn	1 = On		Allen-Bradley	800T-QH2A	Dyna	Dyna	DO	Hardwired	CHP-CP	CHP_SR01		2 YL	New	1/12/2026 Generator Room 105	19/2	
TBD	FUEL GAS	YL-FG-2B		Alarm Light & Horn	S Door Interior Alarm Light & Horn	1 = On		Allen-Bradley	800T-QH2A	Dyna	Dyna	DO	Hardwired	CHP-CP	CHP_SR01		2 YL	New	1/12/2026 Generator Room 105	19/2	
TBD	FUEL GAS	YL-FG-3A		Alarm Light & Horn	SW Door Interior Alarm Light & Horn	1 = On		Allen-Bradley	800T-QH2A	Dyna	Dyna	DO	Hardwired	CHP-CP	CHP_SR01		3 YL	New	1/12/2026 Generator Room 105	19/2	
TBD	FUEL GAS	YL-FG-3B		Alarm Light & Horn	SW Door Interior Alarm Light & Horn	1 = On		Allen-Bradley	800T-QH2A	Dyna	Dyna	DO	Hardwired	CHP-CP	CHP_SR01		3 YL	New	1/12/2026 Generator Room 105	19/2	
TBD	FUEL GAS	YL-FG-4A		Alarm Light & Horn	NW Door Interior Alarm Light & Horn	1 = On		Allen-Bradley	800T-QH2A	Dyna	Dyna	DO	Hardwired	CHP-CP	CHP_SR02		1 YL	New	1/12/2026 Generator Room 105	19/2	
TBD	FUEL GAS	YL-FG-4B		Alarm Light & Horn	NW Door Interior Alarm Light & Horn	1 = On		Allen-Bradley	800T-QH2A	Dyna	Dyna	DO	Hardwired	CHP-CP	CHP_SR02		1 YL	New	1/12/2026 Generator Room 105	19/2	
TBD	ENGINES	QA-EG-9-1		EG-Run-Permission	EG-8 EPO Shutdown	1= Normal				Dyna	Dyna	DO	Hardwired	CHP-CP	CHP_SR03		QA	New	1/12/2026 Generator Room 105	19/2	
TBD	ENGINES	QA-EG-10-1		EG-Run-Permission	EG-10 EPO Shutdown	1= Normal				Dyna	Dyna	DO	Hardwired	CHP-CP	CHP_SR03		QA	New	1/12/2026 Generator Room 105	19/2	
TBD	ENGINES	QA-EG-11-1		EG-Run-Permission	EG-11 EPO Shutdown	1= Normal				Dyna	Dyna	DO	Hardwired	CHP-CP	CHP_SR03		QA	Future	1/12/2026 Generator Room 105	19/2	
TBD	ENGINES	QA-EG-12-1		EG-Run-Permission	EG-12 EPO Shutdown	1= Normal				Dyna	Dyna	DO	Hardwired	CHP-CP	CHP_SR03		QA	Future	1/12/2026 Generator Room 105	19/2	